1111 Bayou Road
La Marque, Texas
409-938-9202

Mayor Bobby Hocking
Mayor Pro-Tem Keith Bell-District A Councilmember Robert Michetich-District C
Councilmember Chris Lane- District B Councilwoman Casey McAuliffe- District D
****

OFFICIALLY POSTED ON THE WEB:

DATE: **11.08.18** TIME: **4:40 p.m.**

ORDINANCE NO. O-2018-0018
RESOLUTION NO. R-2018-0026

CITY OF LA MARQUE
REGULAR CITY COUNCIL
AGENDA
of
November 12, 2018

Notice is hereby given that the City Council of the City of La Marque, Texas will conduct a Regular Meeting on Monday, November 12, 2018, beginning at 6:00 p.m. at 1109-B Bayou Road for the purpose of considering the following agenda**:**

(1) CALL MEETING TO ORDER

(2) ROLL CALL

(3) INVOCATION AND PLEDGE OF ALLEGIANCE

(4) PRESENTATIONS/ PROCLAMATIONS

(5) CITIZENS PARTICIPATION (Limited to three minutes per person)
Comments from the public (at this time, any person with city-related business who has signed up may speak to Council (limited to three (3) minutes.) In compliance with Texas Open Meeting Act, the City may not deliberate on comments. Personal attacks will not be allowed, and personnel matters should be addressed to the City Manager during normal business hours.

(6) CONSENT AGENDA (*All consent agenda items are considered routine by City Council and will be enacted by one motion. There will be no separate discussion of these items unless a Councilmember requests an item be removed and considered separately.)*

a. City Council Budget Workshop Minutes of July 23, 2018
b. City Council Workshop Minutes of September 10, 2018

c. City Council Meeting Minutes of October 8, 2018

d. Discussion/possible action regarding the ratification of the contract between La Marque Economic Development Corporation and Mike Bricker & Associates, Incorporated and the associated bid for the renovation of 401 Laurel – EDC Executive Director A. Getty

(7) PUBLIC HEARING

a. Conduct Public Hearing to hear public input regarding adopting Ordinance No. **O-2018-0013**, approving a re-zone from R-1 Single Family Residential to C-1 General Commercial, being a tract or parcel of land containing 1.3684 acres of land or 59,606 square feet, located in the S.F. Austin League, Abstract 2, Galveston County, Texas; Said 1.3684 acre tract being all of Tracts 1 and 2 of record in the name of La Marque Investment Group, Inc. in Galveston County Clerk File (G.C.C.F.) Number 9103747 and being all of that tract of land of record in the name of Hazel Benton of record in G.C.C.F. Number 8723178, Said 1.3684 acre tract being more particularly described as bearings based as on said G.C.C.F. No. 9103747. (3197 Main and lot on Duroux and contiguous to 3197 Main)

b. Conduct Public Hearing to hear public input regarding Ordinance No. **O-2018-0014,** amending Appendix A, Schedule of Fees and Charges of the Code of Ordinances, City of La Marque, Texas by amending prescribed solid waste collection charges.

(8) OLD BUSINESS

a. Discussion/possible action regarding adopting Ordinance No. **O-2018-0013**, approving a re-zone from R-1 Single Family Residential to C-1 General Commercial, being a tract or parcel of land containing 1.3684 acres of land or 59,606 square feet, located in the S.F. Austin League, Abstract 2, Galveston County, Texas; Said 1.3684 acre tract being all of Tracts 1 and 2 of record in the name of La Marque Investment Group, Inc. in Galveston County Clerk File (G.C.C.F.) Number 9103747 and being all of that tract of land of record in the name of Hazel Benton of record in G.C.C.F. Number 8723178, Said 1.3684 acre tract being more particularly described as bearings based as on said G.C.C.F. No. 9103747. (3197 Main and lot on Duroux and contiguous to 3197 Main) – Development Services Coordinator S. Sutton *THIS IS THE SECOND AND FINAL READING*

b. Discussion/possible action regarding Ordinance No. **O-2018-0014,** amending Appendix A, Schedule of Fees and Charges of the Code of Ordinances, City of La Marque, Texas by amending prescribed solid waste collection charges - Finance Director S. Kou *THIS IS SECOND AND FINAL READING*

(9) NEW BUSINESS

a. Discussion/possible action regarding Ordinance No. **O-2018-0018**, accepting the City of La Marque Engineering Design Criteria Manual prepared by Adico LLC Consulting Engineers. *THIS IS THE FIRST READING*

b. Discussion/possible action regarding Resolution No. **R-2018-0026** to accept the draft report and call a public hearing on the land use assumptions, capital improvements plan and the imposition of impact fees – Interim City Manager C. Warren

c. Discussion/possible action regarding approving the Texas Independence Trail Ride Association to utilize Highland Bayou "Mac McGaffey" Park as an overnight stop in November 16-18, 2018 and February 15-16, 2019 as part of the traditional ride of the Houston Livestock Show and Rodeo; as forwarded by the Parks Board with favorable recommendation – Project Coordinator Amanda Hobby

d. Discussion/possible action regarding adopting Ordinance No. **O-2018-0015,** changing the zoning classification from C-1 Commercial to R-1 Residential, as recommended by the Planning and Zoning Commission of Lot 7A, of McNeels Subdivision, Re-Plat of Lots 7 and 8 a subdivision in Galveston County, Texas, according to the map or plat thereof recorded under Clerks file number 2017060207 of the Plat record of Galveston County. (Known as Spruce St. PID# 721063); amending the Zoning Map of the City of La Marque adopted the 12th day of December 2005, by Ordinance 953 - Development Services Coordinator S. Sutton *THIS IS THE FIRST READING*

e. Discussion/possible action regarding adopting Ordinance No. **O-2018-0016**, changing the Zoning classification from C-1 Commercial to R-1 Residential, as recommended by the Planning and Zoning Commission being Lots 9 thru 12 and the North 26 Feet of Lot 13 in Block 5 and Lots 12 and 13 and the North 20 Feet in Block 6 of McNeels Subdivision, a subdivision in Galveston County, Texas according to the Map or Plat as recorded in Volume 275 Page 379 and 380 of the Deed Records of Galveston County, Texas (Known as 1101 Oak St., PID #98799); amending the City of La Marque Zoning Map, adopted on the 12th day of December, 2005, by Ordinance Number 953 – Development Services Coordinator S. Sutton *THIS IS THE FIRST READING*

f. Discussion/possible action regarding approval of an updated brochure and registration forms for the rental registration program, and adopt Ordinance No. **O-2018-017**, an ordinance waiving registration fees for the rental registration program until December 31, 2018 – Interim City Manager C. Warren *THIS IS THE FIRST READING*

g. Discussion/possible action regarding a proposed Ordinance establishing procedures and criteria for appointing members to the Boards and Commissions and provide direction to City Attorney – Mayor/City Council

(10) AGREEMENTS/CONTRACTS

a. Discussion/possible action regarding approval of agreement with Belt Harris Pechacek, LLLP for two years (fiscal years 2018 and 2019) with option to renew one additional year to perform City's annual financial audits and Single Audits in the amount of $46,950 – Finance Director S. Kou

b. Discussion/possible action regarding approval of agreement between Eriberto (Eddie) Benevides and the City of La Marque for use and maintenance of the fields in Mahan Park, as recommended by the Parks Board – Project Coordinator A. Hobby

c. Discussion/possible action regarding approval of agreement for grant administration services with Provision Specialized Resources, LLC – Interim City Manager C. Warren

d. Discussion/possible action regarding authorizing the Mayor to enter into a Mutual Aid Law Enforcement Agreement whereas participating municipalities/agencies (to include the Galveston County Sheriff's Office) may request law enforcement assistance from any entity that has signed the Agreement – Police Chief K. Jackson

e. Discussion/possible action regarding authorizing the City Manager to execute an Interlocal Agreement with the City of League City for membership in a consortium of law enforcement agencies for the purpose of criminal justice data sharing using computer aided dispatch and records management systems – Police Chief K. Jackson

(11) AWARD OF BIDS

a. Discussion/possible action regarding award of RFP **#18-05** to A to Z Fence Company for the installation of a perimeter security fence for the police station in the amount of $61,945.00 - Police Chief K. Jackson

b. Discussion/possible action regarding award of Bid LM **#09-19** to Beach Town Lawn Service for Lawn Care Maintenance of City Facilities and Parks in the amount of $70,000.00 – Interim City Manager C. Warren

c. Discussion/possible action regarding award of Bid LM **#06-19** to Sprint Waste Services, LP. for Sludge Removal in the amount of $124,500.00 – Assistant Public Services Director C. Cary

d. Discussion/possible action regarding award of Bid LM **#04-19** to Vulcan Materials for limestone, not to exceed $39,144.00 – Assistant Public Services Director C. Cary

(12) EXECUTIVE SESSION

The City Council for the City of La Marque, Texas reserves the right to adjourn into executive session at any time during the course of this meeting to discuss any of the matters listed above, as authorized the Texas Government Code Section 551.071 (Consultation with Attorney), 551.072 (Deliberations about Real Property), 551.073 (Deliberations about Gifts and Donations), 551.074 (Personnel Matters), 551.076 (Deliberations about Security Devices) and 551.086 (Economic Development)

(13) REQUEST AND ANNOUNCEMENTS

Requests by Mayor and Council Members for items to be placed on future City Council agendas and announcements on city events/community interests TEX. GOV'T CODE §551.415. (b), "items of community interest" includes:

(1) expressions of thanks, congratulations, or condolence;

(2) information regarding holiday schedules;

(3) an honorary or salutary recognition of a public official, public employee, or other citizen, except that a discussion regarding a change in the status of a person's public office or public employment is not an honorary or salutary recognition for purposes of this subdivision;

(4) a reminder about an upcoming event organized or sponsored by the governing body;

(5) information regarding a social, ceremonial, or community event organized or sponsored by an entity other than the governing body that was attended or is scheduled to be attended by a member of the governing body or an official or employee of the municipality or county; and

(6) announcements involving an imminent threat to the public health and safety of people in the municipality or county that has arisen after the posting of the agenda.

(14 ADJOURNMENT

CERTIFICATION:

I hereby certify that the above notice of meeting was posted at 1109-B Bayou Road, La Marque, Texas on or before November 9, 2018, before 5:30 p.m.

_____

Robin Eldridge, TRMC
City Clerk

This facility is wheelchair accessible and accessible parking spaces are available. Request for accommodations or interpretive services must be made 48 hours prior to this meeting. Please contact the City Clerk's office at (409) 938-9259, or Fax (409) 935-0401, or e-mail cityclerk@cityoflamarque.org for further information.

1111 Bayou
La Marque, Texas 77568
409.938.9202

CITY OF LA MARQUE
CITY COUNCIL
SPECIAL CALLED MEETING MINUTES
OF
July 23, 2018

Special Called City Council Meeting Minutes of the City of La Marque City Council held on Monday, July 23, 2018, beginning at 5:00 p.m. at 1109-B Bayou Road with the following members present:

(1) CALL TO ORDER
Mayor Hocking called the Regular Meeting to order at 5:00 p.m.

(2) ROLL CALL

Bobby Hocking	Mayor
Keith Bell	Mayor Pro-Tem, Councilmember District A
Chris Lane	Councilmember, District B
Robert Michetich	Councilmember, District C
Casey Mc Auliffe	Councilwoman, District D

OTHER OFFICIALS PRESENT:

Carol Buttler	City Manager
Robin Eldridge	City Clerk

(3) PUBLIC HEARING

a. Conduct a Public Hearing to hear public input regarding Ordinance No. **O- 2018-009**, an Ordinance Authorizing the Issuance and Sale of the City of La Marque, Texas, Tax and Revenue Certificates of Obligation, Series 2018; Levying a Tax and Providing for the Security and Payment Thereof; and Enacting Other Provisions Relating Thereto.

Mayor Hocking Called the public hearing to order at 5:00 p.m.

No one spoke.

Mayor closed the Public Hearing and reconvened the Special Meeting at 5:01 p.m.

(4) OLD BUSINESS

a. Discussion/possible action regarding adopting Ordinance No. **O-2018-009**, an Ordinance Authorizing the Issuance and Sale of the City of La Marque, Texas, Tax and Revenue Certificates of Obligation, Series 2018; Levying a Tax and Providing for the Security and Payment Thereof; and Enacting Other Provisions Relating

1111 Bayou
La Marque, Texas 77568
409.938.9202

Thereto. **THIS IS THE FIRST AND FINAL READING (as per Texas Government Code 1201.028)**

** Councilmember Lane made a motion to adopt Ordinance No. **O-2018-009**, an Ordinance Authorizing the Issuance and Sale of the City of La Marque, Texas, Tax and Revenue Certificates of Obligation, Series 2018; Levying a Tax and Providing for the Security and Payment Thereof; and Enacting Other Provisions Relating Thereto. **THIS IS THE FIRST AND FINAL READING (as per Texas Government Code 1201.028)**

** Councilmember Michetich seconded. **MOTION CARRIED UNANIMOUSLY**

(5) NEW BUSINESS

a. Discussion/possible action regarding approving a commercial real estate contract with Abundant Life Christian Center, Inc. for purchase of three (3) previously leased structures for City facilities in the amount of $3,000,000.00.

** Councilmember Michetich made a motion to approve **a** commercial real estate contract with Abundant Life Christian Center, Inc. for purchase of three (3) previously leased structures for City facilities in the amount of $3,000,000.00.

** Councilmember Lane seconded**. MOTION CARRIED UNANIMOUSLY**

(6) ADJOURNMENT

** Councilmember Michetich made a motion to adjourn the Special Called Meeting at 5:02 p.m. Mayor Pro-Tem Bell seconded. **MEETING ADJOURNED.**

_____
Bobby Hocking, Mayor

ATTEST:

_____
Robin Eldridge, TRMC
City Clerk

1111 Bayou
La Marque, Texas 77568
409.938.9202

CITY OF LA MARQUE
CITY COUNCIL
WORKSHOP
MINUTES
OF
SEPTEMBER 10, 2018

Workshop Minutes of the City of La Marque City Council held on Monday, September 10, 2018, beginning at 4:00 p.m. at 1109-B Bayou Road with the following members present:

(1) CALL TO ORDER

Mayor Hocking called the Workshop to order at 4:08 p.m.

(2) ROLL CALL – MEMBERS OF COUNCIL

Bobby Hocking	Mayor
Keith Bell	Mayor Pro-Tem, Councilmember District A
Chris Lane	Councilmember, District B
Robert Michetich	Councilmember, District C
Casey Mc Auliffe	Councilwoman, District D

OTHER OFFICIALS PRESENT:

Charlene Warren	Interim City Manager
Ellis Ortego	City Attorney
Robin Eldridge	City Clerk

(3) NEW BUSINESS

a. Discussion/possible action regarding re-establishing procedures for the appointment of volunteers to various standing Boards, Commissions and Committees of the City

Some background information was provided by Mayor Pro-Tem Bell about the earlier Boards and Commissions process and added that it had no order or formal organization. At that time, any one could contact any Councilmember with a name of a person to be considered to be appointed to a Board or Commission. "It wasn't really a process that allowed for individual districts, anyone could bring forth applicants for the consideration of Council. After working through a process, the ending results were that each Boards and Commissions had a person representing the district from which that Councilperson represented. On a five-member Board, each Councilmember had a person to appoint to that Board. That is how this whole process started and that's why we have those districts with those particular Boards and Commissions."

DRAFT

1111 Bayou
La Marque, Texas 77568
409.938.9202

Further discussion included the resolution that was adopted in 2006, that addressed how to go about appointing members to the Boards. City Attorney Ortego stated "The Code of Ordinances deal with each of these Boards. The Charter provides that the Council, by ordinance creates the Boards and Commissions; the content of the ordinances creating these Boards and Commissions must provide the function of the Commission, the number of members, how they are appointed and their terms. So that is technically done by ordinances. I am not sure if they provide how they are appointed."

Informational points made: The Planning and Zoning Ordinance is the only Boards and Commission ordinance that requires members to live or own property in the City, because of the importance of the zoning issues. This may also be included in State laws.

Although amendments have been made through the years, Councilwoman Mc Auliffe said that she feels that it is time for evolution and moving to the next phase, particularly policies including eligibility and best practices.

Two emails were included in the workshop packet outlining two members of Council and some changes that they want to make to the appointment procedures. (Michetich and Mc Auliffe)

Since the Charter requires these Boards and Commissions, their creations, and other details pertaining to their functions, etc., to be done by ordinance, it was asked why the procedures were originally passed by resolution instead. City Attorney responded that he didn't know why this was done. At that time, the previous Council felt that it should be done by resolution and set those perimeters or guidelines as such. "Passing a resolution was the initial step into the concept, because it was new. What we could get consent on at that time, was a resolution." (As Mayor Pro-Tem Bell recalls).

The difference between a resolution and an ordinance was briefly described. By passing an ordinance, it requires three votes. They moved in baby steps in moving forward with this new concept.

Councilwoman Mc Auliffe outlined the email that she sent to the City Clerk earlier in the year, regarding things that she would like to see as guidelines for Boards and Commissions appointments:

1. Citizens may only be appointed to the same Board or Commission two times consecutively. Once their second term is up, may be appointed to a different Board or Commission, if they so choose and the Board of their choice.

DRAFT

1111 Bayou
La Marque, Texas 77568
409.938.9202

2. That a person can serve a maximum on one Board or Commission at a time, with the prevision, as discussed at the retreat, allowing persons that have already been serving for a while on certain Boards or Commission to continue for the rest of their term. When the terms are up then decide at that time, it doesn't have to be an immediate change.
3. That a member of a Board or Commission must be a registered resident of the City of La Marque.

Councilwoman Mc Auliffe stated, "I feel like all three of these issues are very in line with making the way we appoint members to our Boards and Commissions, which are leadership roles within the City, as inclusive and available to as many people as possible. They are very in line with the way a lot of other cities do this. To me, they feel very straight forward, sensible, and logical with making sure that we not only make it assessible to as many people but encouraging the infusion of new thoughts, new ideas, new blood, new people."

Mayor Hocking added that during the seven years he has been on Council, at every meeting, there are Boards and Commissions applications on the back table. "Many times, I have encouraged, from the dais, to please pick up one and apply. We have had some people apply through that process. But I can't even find anybody for the Cemetery Board and anybody should be able to step up and do that. Recently, there was one application, and I let Robert have that, and that could have been mine and I would be done with my appointments. There has been a problem with getting folks to apply and serve. This has been a problem for my seven years and probably longer, it's been really hard to find Board members. We have tried and we have encouraged online, so I am not sure if there is a big pool of people to draw from. Young folks normally have other things to do, like jobs and kids, then at night, with the exception of you (referring to Councilwoman Mc Auliffe) and Mr. Lane, they have other things to do rather than being involved in the process, in this particular city. I am very much willing to compromise on some of your points, but, before we get into that discussion, I want to open it up to everyone else, I know Robert sent an email."

Councilmember Michetich addressed his email, sent back in April. "I know we talked about some things at the retreat, we have all had time to reflect. Along with what the Mayor said, we don't have a pool sitting there ready of people for these Boards. We might have a particular interest in one Board a or another. But as we get vacancies we are out having to beat the bushes to get someone for these boards. They are not paid positions. What we find of those who step up want to serve, must of them are retired. Or they are in a business that allows them the time to do it. I find in the younger group, not to disparage the younger group, but we find that they still miss meetings.

DRAFT

1111 Bayou
La Marque, Texas 77568
409.938.9202

Excused, sure, because some may have to be at work, but this even happens with us here on Council. I look to some of the persons that are serving on the Boards today, the Boards are functioning effectively rather well, but there are differences that will come up with members of staff, the City Manager between the Board members. Typically, the persons that serve, it is their passion, they live here, and quite frankly, the ones that serve on multiple Boards, I applaud them, because if they didn't we would be dysfunctional, and that sets up a city for failure, for chaos. If the Boards can't conduct their business as a city, it also makes the administration look bad. I do believe that a person should be a resident of this City when initially appointed. I do believe that existing members that have served their city so good for so long, who may have moved out of the City but are still faithful to this city, I believe they should be allowed to do so. I really don't want to see them removed from a Board, just because they move into a neighboring community, and they may only serve on one Board. It is still their passion, it is almost like our combined Chamber of Commerce. Not everyone that is in the Chamber or a member that supports our Bayou Fest, they are not all residents of La Marque. It's a combination, it's this area. Persons serving on multiple Boards are because we couldn't get the people. And I am not going to sit here and imagine that I am going to be able to get enough people to serve on a Board even for a term. When first a elected to Council, I received some advice form Councilmember Lane, and I met with an individual who I knew would make a great Board member, and could, but for reasons beyond anyone's control, had other obligations, and it all came down to his job. What I see in this community, we see it in our voting turnout, a ten percent turnout here is great. Why do we expect that we can get that much more in volunteers? We might get them to sign up, go out and do some arm twisting and then what happens, for some reason, it sometimes falls apart. Another issue is to limit terms. We are not limited, so why should we limit them on there? There is quite a bit of training required on these Boards. It is difficult for these members to get to some of the training they need. Once we get it down and get it going, we need to keep that, we need to keep that. Those are valuable resources. I respect those individuals that want to be here and have been serving for years and have done a great job. If I saw a waiting list of a bunch of applications within the next we few weeks, that don't hold water for me. This is an ongoing thing. I'm not up for un-seating and limiting Board members, or the number of Boards they are on. There are some by Charter, that only allow you to serve on that one Board/Commission. I have been observing what we have been doing. I don't want to see further grandfather of persons that are appointed and move out. I agree that owning property in La Marque doesn't give you the right to serve. If you don't live here, you don't get to be appointed. I feel if you move from La Marque, you must step down from your position, at the end of that term. But, for those that are already there and are grandfathered, I feel like they could continue

DRAFT

1111 Bayou
La Marque, Texas 77568
409.938.9202

to be reappointed at that Councilmembers' discretion (3-4) persons. I do believe that everyone deserves the respect and the dignity of being called by the Councilmember that wants to remove them and have it explained; and all of your new appointments, and we have fallen down in this."

Mayor Hocking referred to an appointment of his and added, "The tried and true sometimes trumps the zealous people who think they want to serve and then they find out it takes times an effort, they don't."

Mayor then referred to Councilmember Michetich 's email with his guidelines for the Boards and Commissions appointments:

1. Placing requirement for service, of residency within the City of La Marque for new appointments.
2. Grandfathering of any existing Board or Commission member to be allowed to continue service regardless of residency, if member is in good standing and wishes to continue service to La Marque – this would include reappointment to the same Board or Commission
3. Requirement of both a phone call from the Councilmember and a letter of notification from the City of current serving member wishes for continuance for another term
4. Requirement of phone contact by appointing Councilmember or of City staff on City appointments of intent to replace a standing member either for new appointment or for removal a follow up letter from the City of La Marque conferring such action

Discussion continued with Councilwoman Mc Auliffe respectfully disagreeing that the "pool" was not there. "Of the seven appointments that I have made since being elected, five are completely new appointments, and are not no- shows. They are people who come when they are called, they do their homework, and they read their packets. They are people I met during my town hall meetings, and during my campaign. It is clear that we have a participation challenge, just like so many other cities. But, I do not believe that we should roll over and say that it's just never going to be any better than this. I do value experience, but I also value actively working towards seeing the kinds of changes we are seeing with participation. I believe it is more about taking on the challenge of actively recruiting in our community. I believe one of the most tangible things that we do is to help choose this leadership that will make these decisions that come to us or that get disseminated out into our City. I don't believe it's a matter of these people are just not there. Our City is too big for that. It is simply that they have not been tapped into, or I believe for decades, many people have not felt invited to the table, and many people don't even know the

1111 Bayou
La Marque, Texas 77568
409.938.9202

table was here." She suggested using the Public Information Officer to help generate the interest within the City, and that these positions exist and that they are incredibly paramount to success of our city.

Councilmember Michetich said that there were two citizens at the current meeting and that the past several City Council meetings there have been more members of staff than members of the public. "Each time we have an important placement, we do have to seek these people out, and we can do that." Speaking to Ms. Mc Auliffe, "You may have more time to do that, but it doesn't always happen with the rest of us. I have to solicit to find my appointments, and if more people start signing up, we will interview them, and it will be up to each of us to interview as that comes forward, into that pool. It would make it a lot easier, if that pool was there for me to make those selections, but I am not one to just say, I am done with you, you served your term and you're out. There is a lot of wealth in the experience and what they bring to the table and the history and the knowledge that they know of the City. We have made a lot of progress here in the last three or four years. I just think that putting term limitations and limitations to only one Board is a recipe for failure.

Councilmember Lane said, "Sylvester Turner, Mayor of Houston, won his election with 200,000 votes, in the fourth largest City in the United States. You have to imagine the marketing of these campaigns had. So, this lack of civic engagement isn't restricted to the City of La Marque, it is something that we are suffering from as a country. I think it is incumbent of us as a Council to take this issue by the horns and be a change that we are trying to articulate today. Either we can make excuses and say that the people aren't out there. We are city of 17,000 people and that is an insult to our citizens to say that we don't have the people that are qualified to sit on these Boards, I just don't think that that is accurate. The current system that we have is based on the Council, and I will go as far as to say that any problems that we have had with potential Board members and Commissioners, it falls back on us. Our Boards and Commissions are only going to be as strong as our Councilmembers. If we say we don't have a pool big enough of constituents to choose from, it's a shallow pool, that means we are not doing our job as Councilmembers, this is one of our jobs." Further stated that it was easy to look at standing members who have served awhile, and just reappoint them, and that the hardest way is to work their own district and go out and find persons that could be assets to the City. "We have aging leadership, and if it is not addressed, in ten to twenty years, where are we going to get our future leaders from, who is going to serve as Councilmembers, who is going to serve on our Boards and

DRAFT

1111 Bayou
La Marque, Texas 77568
409.938.9202

Commissions?" He does agree to term limits to the Boards, but that would be to a particular board, and once the term limit is reached, they could be appointed to another Board. Also said that there are 17,000 people in La Marque and that there is no reason for a person to serve on more than one Board at a time. He also believes that members should be residents of La Marque.

Further discussion included whether or not placing some of the stipulations would place restrictions on future Council.

Mayor Pro-Tem Bell spoke, "The reason I started with the history and resolution versus ordinance. It really speaks to us about the crossroads we are facing as a city. I think as a Council, as a city, you should always act and make it clear what your preferences are and what sort of city you want to be. I think what Casey is suggesting is an idea of what she believes our city should be in the future. I think that it is important that we understand and hopefully compromise and adopt a lot of what she is saying, not necessarily for what is happening now, but because it is our job to dictate and to express what sort of city that we want to be. I think that we ought to be able to have a hybrid system, I think that to do this, we need to make sure that we understand that the goal is to not have people serve in multiple positions and have people serve multiple terms. That is a great goal, and we can do this by ordinance and add the provision that if there are not any eligible persons that have a desire to serve, that these folks should be able to continually serve, not only the rest of that term, but terms beyond provided that there has not been any person that has brought themselves forward to serve in that capacity. I don't think that we should limit those volunteers to our city limits. We can limit a percentage of a Board." He then gave examples on the Parks Board, and that a few of those members that do live outside who that bring double and triple amount of experience to that Board, that even the most eager persons that live within the city, can't. He mentioned that Council could innovate the process of appointments and innovate the ways and times that members can meet and suggested electronically attending meetings. He also suggested ways to compensate the volunteers, through providing meals during meetings, or pay for training and workshops.

Further discussion came to the consensus of Council for the following:1) to have term limits of three consecutive two-year terms, with all Boards beginning now, with the exception of EDC, and having a term of two six-year terms (12 years); once a Councilmember is notified of a vacancy they will have thirty days to appoint or reappoint (keeping mind term limits), if an appointment isn't or cannot be made then, the rest of

DRAFT

1111 Bayou
La Marque, Texas 77568
409.938.9202

Council can make the appointment or the members term can be extended for a six month period. There is the need for a provision to be included into the ordinance. 2) A person could serve on one Board or Commission at a time and could be an alternate on another Board or Commission; with the understanding of if a position comes up on that Board or Commission that alternate must make a choice of which Board or Commission he or she would want to be on as a primary member.

The discussion went further concerning whether an exception could be - (unless the member is on a long-term appointment- EDC) then you could still serve on another Board or Commission.

***The consensus of Council for the drafting of an ordinance:**
1. Term limits: All Boards and Commissions other than EDC shall have three (3) consecutive two-year terms. EDC Term limits: Two (2) six-year terms

2. The new term limits begin now…so all members of all Boards and Commissions shall remain as they are throughout their terms.

3. After current members serve their terms……. a person can serve as a primary member on **one** Board or Commission at a time, they are allowed to be an alternate on another Board or Commission.

4. Residency requirements are for appointments from this day forward- current members are grandfathered.

5. Requirement of both a phone call from the Councilmember and a letter of notification from the City of current serving member wishes for continuance for another term

6. Requirement of phone contact by appointing Councilmember or of City staff on City appointments of intent to replace a standing member either for new appointment or for removal a follow up letter from the City of La Marque conferring such action

The need for some sort of expert in a particular field that would benefit the City by their presence on a particular board, which could include an ex-officio member. (Parks Board (example: Soccer Coach) and Building Standards Commission example: (Builder) this could also be a recommendation by another Board members but would still have to be brought before City Council for approval.

DRAFT

1111 Bayou
La Marque, Texas 77568
409.938.9202

(4) ADJOURNMENT

Councilmember Lane made a motion to adjourn the Workshop at 5:44 p.m. Councilmember Michetich seconded. **WORKSHOP ADJOURNED**.

_____
Bobby Hocking, Mayor

ATTEST:

_____
Robin Eldridge, TRMC
City Clerk

DRAFT

1111 Bayou
La Marque, Texas 77568
409.938.9202

CITY OF LA MARQUE
CITY COUNCIL
REGULAR MEETING MINUTES
OF
October 8, 2018

Regular City Council Meeting Minutes of the City of La Marque City Council held on Monday, October 8, 2018, beginning at 6:00 p.m. at 1109-B Bayou Road with the following members present:

(1) CALL TO ORDER
Mayor Hocking called the Regular Meeting to order at 6:00 p.m.

(2) ROLL CALL

Bobby Hocking	Mayor
Keith Bell	Mayor Pro-Tem, Councilmember District A
Chris Lane	Councilmember, District B - Absent
Robert Michetich	Councilmember, District C
Casey Mc Auliffe	Councilwoman, District D

OTHER OFFICIALS PRESENT:

Charlene Warren	Interim City Manager
Robin Eldridge	City Clerk
Ellis Ortego	City Attorney

(3) INVOCATION AND PLEDGE OF ALLEGIANCE- Mayor Pro-Tem Bell led the invocation and the Pledge of Allegiance was led by Mayor Hocking

(4) PRESENTATIONS/ PROCLAMATIONS

a. Proclamation- Municipal Court Week - November 5-9, 2018
Mayor Hocking presented Municipal Court Judge Baker, City Marshall Russell Washington, Rosemary Bell, Municipal Court Clerk and Sheila Maya Deputy Court Clerk

(5) CITIZENS PARTICIPATION

1. Charles Williams shared his concerns of a property behind his home at 228 Splintered Arrow and his fence backs up to a vacant piece of property that hasn't ever been mowed and has bad mosquitoes.

2. Jerry Martinez addressed his objection to the rental registration program adopted by ordinance this past summer. He owns some rental property in La Marque and feels that the program places unnecessary burdens on property owners. He said he has a Property Manager and by doing so he is required by (TREC) Texas Real Estate Commission to maintain his property so that it is safe for the tenant and is

1111 Bayou
La Marque, Texas 77568
409.938.9202

required to make repairs as needed. He asked for Council to reconsider the Program

3. Leonard Payne said that he and his wife had inherited two houses on the same block that he lives on. "My daughter lives in one of these houses and I don't charge her a nickel rent, and I never intended to. She is going to inherit this property when I disappear. I don't think that it is right that the City done me another hundred bucks, when I am paying taxes on that property to begin with. There are members of this Council that don't pay property taxes in La Marque, but I (*damn*) sure do. If ya'll need more money, someone needs to get out and do some other law enforcement ordinance enforcement and collect on some of the revenue you are missing there. I do a lot of mowing around there and a lot of it is City right-of way that I cut. I can cut more right-of way than the City tractor does, when he is out just riding around." He continued and added that he worked for the city for over thirty years and that he knows the ordinances probably better than the people that are enforcing them. "I feel like the City is double dipping on me on the tax dollar. When they are asking me for another hundred dollars, for the rent houses, they are not rent houses, they belong to me, but nobody is paying rent. I pay the taxes every year. Now, if I gave it to my daughter today, it would probably be on the court house steps for sale in a year or two, because she wouldn't be paying the taxes, course Daddy would end up." He said he disagreed with the city charging this fee.

(6) CONSENT AGENDA

a. Minutes of City Council for a Special meeting held on July 23, 2018 (5:00 p.m.)
b. Minutes of City Council for the Regular meeting held on September 10, 2018
c. Minutes of City Council for a Special meeting held on September 11, 2018
d. Minutes of City Council for a Special meeting held on September 17, 2018
e. Acceptance of a Proposal submitted by Ron Cox Consulting to conduct a search for a new City Manager for the City of La Marque
f. Authorizing the Mayor to execute a letter to the La Marque Economic Development in regards to receiving revitalization funds for Galveston County match ($1,000,000.00)
g. Authorizing the Mayor to execute a letter to the La Marque Economic Development Corporation in regards to receiving funds for TxDOT infrastructure enhancements ($60,000.00)
h. Discussion/possible action regarding authorizing the City Manager to negotiate a sponsorship agreement with People Generation for Magical Winter Lights 2018 in an amount not to exceed $40,000.00.
i. Discussion/possible action regarding the approval of a three (3) year agreement between the City of La Marque and the La Marque Police Association beginning October 1, 2018 and ending on September 30, 2021.
j. Adopting Resolution No. R-2018-0025 in Recognition of Municipal Court Week November 5-9, 2018.

1111 Bayou
La Marque, Texas 77568
409.938.9202

Mayor Hocking pulled items "f" and "g" to explain. "Basically, what item f is, the La Marque EDC has a Revitalization Fund and they have offered to match the Galveston County match, so for the road bonds, that were passed by the officials. This will need to go before the EDC Boards, but they are willing to match the County's one million, so, instead of 1.3 million for roads, we would get 3.7 for roads. Item "g", is for a consulting fee so that when the new overpasses go in, this will go towards the logo and stamps and really recognize our City."

** Mayor Pro-Tem Bell made a motion to approve the Consent agenda.
** Councilmember Michetich seconded. **MOTION CARRIED UNANIMOUSLY**.

(7) PUBLIC HEARING

a. Conduct Public Hearing to hear public input regarding adopting Ordinance No. **O-2018-0012**, amending Chapter 62, Section 62-84, Traffic and Vehicles, of the City of La Marque Code of Ordinances, Farm Road Highway 1764 to alter certain speed limits and amending Section 62-85, by deleting Subsection (c), which established a school zone on Farm Road Highway 1765.

Mayor Hocking closed the Regular Meeting and opened the Public Hearing at 6:14 p.m.

No one spoke.

Mayor Hocking closed the Public Hearing and reconvened the Regular Meeting at 6:15 p.m.

(8) OLD BUSINESS

a. Discussion/possible action regarding adopting Ordinance No. **O-2018-0012**, amending Chapter 62, Section 62-84, Traffic and Vehicles, of the City of La Marque Code of Ordinances, Farm Road Highway 1764 to alter certain speed limits and amending Section 62-85, by deleting Subsection (c), which established a school zone on Farm Road Highway 1765 *THIS IS THE SECOND AND FINAL READING*

** Councilmember Michetich made a motion to adopt Ordinance No. O-2018-0012.
** Councilwoman seconded. **MOTION CARRIED UNANIMOUSLY**

(9) AGREEMENTS/CONTRACTS

a. Discussion/possible action authorizing the City Manager to execute the annual contract with the County of Galveston Commissioners' Court for the provision of fire protection services to unincorporated areas of Galveston County commencing

1111 Bayou
La Marque, Texas 77568
409.938.9202

upon execution, and expiring September 30, 2019, in return for payment in the amount of twenty-two thousand five hundred dollars and no cents ($22,500.00).

** MAYOR Pro-Tem Bell made a motion to authorize the City Manager to execute the annual contract with the County of Galveston Commissioners' Court for the provision of fire protection services to unincorporated areas of Galveston County commencing upon execution, and expiring September 30, 2019, in return for payment in the amount of twenty-two thousand five hundred dollars and no cents ($22,500.00).

** Councilwoman Mc Auliffe seconded. **MOTION CARRIED UNANIMOUSLY.**

b. Discussion/possible action regarding approval of annual Water Pollution Control and Abatement Contract with Galveston County Health District for services provided, including City-wide grease trap inspections, Waste Water Treatment inspections, and complaint investigations, in the amount of $12,708.00.

** Councilmember Michetich made a motion to approve the annual Water Pollution Control and Abatement Contract with Galveston County Health District for services provided, including City-wide grease trap inspections, Waste Water Treatment inspections, and complaint investigations, in the amount of $12,708.00.

** Mayor Pro-Tem Bell seconded. **MOTION CARRIED UNANIMOUSLY**.

c. Discussion/possible action regarding approving a professional services agreement with Precision Utilities, LLC, for providing oversight and administration of the Water and Wastewater Facilities (Department 24) for compliance with TCEQ and to provide for the health, safety and welfare of the City of La Marque in the amount of $150,000.00.

** Councilmember Michetich made a motion to approve a professional services agreement with Precision Utilities, LLC, for providing oversight and administration of the Water and Wastewater Facilities (Department 24) for compliance with TCEQ and to provide for the health, safety and welfare of the City of La Marque in the amount of $150,000.00.

** Councilwoman Mc Auliffe seconded.

Mayor Pro-Tem Bell asked if there would be able to look at the current performance prior to contracting with a management company compared to our performance after, mostly in the area of expenditures and compliance history. Interim City Manager was going to look into this.

Interim Public Services Director, Mr. Deck Shaver commented, "The primary focus when hiring these folks is to have the required licenses and operators that TCEQ requires us to have. Under state regulations we are required to have either on

1111 Bayou
La Marque, Texas 77568
409.938.9202

staff or under contract the state licensed operators for the water and waste water services."
MOTION CARRIED UNANIMOUSLY.

d. Discussion/possible action regarding approval of the annual purchase of surface water from Gulf Coast Water Authority in the amount of $1,382,379.00 which includes Bond B in the amount of $37,129.00 and Bond D in the amount of $245,250.00.

** Councilwoman Mc Auliffe made a motion to approve the annual purchase of surface water from Gulf Coast Water Authority in the amount of $1,382,379.00 which includes Bond B in the amount of $37,129.00 and Bond D in the amount of $245,250.00.
** Mayor Pro-Tem Bell seconded. **MOTION CARRIED UNANIMOUSLY**.

(10) NEW BUSINESS

a. Discussion/possible action regarding adopting Ordinance No. **O-2018-0013** approving a re-zone from R-1 Single Family Residential to C-1 General Commercial, being a tract or parcel of land containing 1.3684 acres of land or 59,606 square feet, located in the S.F. Austin League, Abstract 2, Galveston County, Texas; Said 1.3684 acre tract being all of Tracts 1 and 2 of record in the name of La Marque Investment Group, Inc. in Galveston County Clerk File (G.C.C.F.) Number 9103747 and being all of that tract of land of record in the name of Hazel Benton of record in G.C.C.F. Number 8723178, Said 1.3684 acre tract being more particularly described as bearings based as on said G.C.C.F. No. 9103747. (3197 Main and lot on Duroux and contiguous to 3197 Main) *THIS IS THE FIRST READING.*

** Councilmember Michetich made a motion to adopt Ordinance No. O-2018-0013.
** Councilwoman Mc Auliffe seconded. **MOTION CARRIED UNANIMOUSLY**.

b. Discussion/possible action regarding Ordinance No. **O-2018-0014**, amending Appendix A, Schedule of Fees and Charges of the Code of Ordinances, City of La Marque, Texas by amending prescribed solid waste collection charges *THIS IS THE FIRST READING.*

** Councilwoman Mc Auliffe made a motion to adopt Ordinance No. O-2018-0014.
** Councilmember Michetich seconded. **MOTION CARRIED UNANIMOUSLY.**

c. Discussion/possible action regarding authorizing the Police Department and the Municipal Court to finance the purchase of nine (9) marked patrol vehicles; eight (8) for the Police Department and one (1) for the City Marshal.

1111 Bayou
La Marque, Texas 77568
409.938.9202

** Councilwoman Mc Auliffe made a motion authorizing the Police Department and the Municipal Court to finance the purchase of nine (9) marked patrol vehicles; eight (8) for the Police Department and one (1) for the City Marshal

** Mayor Pro-Tem Bell seconded. **MOTION CARRIED UNANIMOUSLY**.

(11) AWARD OF BIDS

a. Discussion/possible action regarding the award of depository contract to Texas First Bank for a one-year term and an option to extend for one additional year.

** Councilmember Michetich made a motion to award the depository contract to Texas First Bank for a one-year term and an option to extend for one additional year.

** Councilwoman Mc Auliffe seconded. **MOTION CARRIED UNANIMOUSLY**.

b. Discussion/possible action regarding award of Bid **#LM 02-19** to Petroleum Traders Corporation for fuel in the amount of $15,000.00, in differential costs.

** Mayor Pro-Tem Bell made a motion to award Bid **#LM 02-19** to Petroleum Traders Corporation for fuel in the amount of $15,000.00, in differential costs.

** Councilmember Michetich seconded. **MOTION CARRIED UNANIMOUSLY**.

c. Discussion/possible action regarding award of Bid **#LM 03-19** to Century Asphalt for Cold Mix Cold Lay (CMCL) in the amount of $30,800.00.

** Mayor Pro-Tem Bell made a motion to award Bid **#LM 03-19** to Century Asphalt for Cold Mix Cold Lay (CMCL) in the amount of $30,800.00.

** Mc Auliffe seconded. **MOTION CARRIED UNANIMOUSLY**.

d. Discussion/possible action regarding award of Bid **#LM 07-19** to CPR Services & Supplies dba MDN Enterprises for Water & Sewer Supplies in the amount of $125,278.45.

** Councilwoman Mc Auliffe made a motion to award Bid **#LM 07-19** to CPR Services & Supplies dba MDN Enterprises for Water & Sewer Supplies in the amount of $125,278.45.

** Mayor Pro-Tem Bell seconded. **MOTION CARRIED UNANIMOUSLY**.

e. Discussion/possible action regarding award of Bid **#LM 01-19** to DXI Industries for Liquid Chlorine, Calcium Hypochlorite & Sulfur Dioxide in the amount of $ 65,000.00.

** Councilmember Michetich made a motion to award Bid **#LM 01-19** to DXI Industries for Liquid Chlorine, Calcium Hypochlorite & Sulfur Dioxide in the amount of $ 65,000.00.

1111 Bayou
La Marque, Texas 77568
409.938.9202

** Councilwoman Mc Auliffe seconded. **MOTION CARRIED UNANIMOUSLY**.

f. Discussion/possible action regarding award of Bid **#LM 05-19** to Evoqua Water Technologies for Odor and Corrosion Control in the amount of $178,200.00.

** Councilwoman Mc Auliffe made a motion to award Bid **#LM 05-19** to Evoqua Water Technologies for Odor and Corrosion Control in the amount of $178,200.00.
** Mayor Pro-Tem Bell seconded. **MOTION CARRIED UNANIMOUSLY**.

g. Discussion/possible action regarding authorizing the City Manager to accept Texas Pride Utilities' proposal to perform emergency Sanitary Sewer manhole repairs at the 6th Street Lift station in the amount of $64,300.00.

** Councilwoman Mc Auliffe made a motion to authorize the City Manager to accept Texas Pride Utilities' proposal to perform emergency Sanitary Sewer manhole repairs at the 6th Street Lift station in the amount of $64,300.00.
** Mayor Pro-Tem Bell seconded. **MOTION CARRIED UNANIMOUSLY.**

h. Discussion/possible action regarding approval of LJA Engineering's Proposal for Engineering Services for the City of La Marque Assessment and Feasibility Report for a 2.25 Million Gallon per Day (MGD) Wastewater Treatment Plant (WWTP) Expansion in the amount of $135,925.00.

** Mayor Pro-Tem Bell made a motion to approve LJA Engineering's Proposal for Engineering Services for the City of La Marque Assessment and Feasibility Report for a 2.25 Million Gallon per Day (MGD) Wastewater Treatment Plant (WWTP) Expansion in the amount of $135,925.00.
** Councilwoman Mc Auliffe seconded. **MOTION CARRIED UNANIMOUSLY**.

(12) APPOINTMENTS/NOMINATIONS

a. Discussion/possible action regarding appointments and/or reappointments to fill various positions of the Boards and Commissions

There were no appointments or reappointments.

(13) EXECUTIVE SESSION

There was no Executive Session

(14) REQUEST AND ANNOUNCEMENTS

Councilwoman Mc Auliffe stated October was her favorite month. Reported that she has witnessed persons helping each other in her district. It will be exciting to work with the consulting firm in search for a new City Manager. Wish all a happy Halloween.

1111 Bayou
La Marque, Texas 77568
409.938.9202

Reported Fall Sweep (City-wide cleanup) asked for volunteers. (November 3, 2018) from 8:00 to 4:00 p.m.

Councilmember Michetich said he was looking forward to good weather for Bayou Fest on October 20, 2018.

Mayor Hocking thanked all who participated in National Night Out. Wished all a great month of October.

(15) ADJOURNMENT

** Councilwoman Mc Auliffe made a motion to adjourn the Regular meeting at 6:33 p.m.

** Councilmember Michetich seconded. **MOTION CARRIED UNANIMOUSLY.**

_____
Bobby Hocking, Mayor

ATTEST:

_____
Robin Eldridge, TRMC
City Clerk

CITY COUNCIL AGENDA FORM

Meeting Date: 11/12/18 | Agenda item: **6d**
Prepared by: Alex Getty | Reviewed by: *Charlene Warren*
Department: EDC

AGENDA ITEM DESCRIPTION: Discussion/possible action regarding the ratification of the contract between La Marque Economic Development Corporation and Mike Bricker & Associates, Incorporated and the associated bid for the renovation of 401 Laurel

X

ATTACHMENTS FOR REFERENCE

1. Contract between La Marque Economic Development Corporation and Mike Bricker & Associates Inc.
2. 401 Laurel Preliminary Bid Number 3 - Final sub list
3. EDC/Council Joint Meeting Minutes - October 18, 2018

STAFF BRIEFING:

- This is the next step in the long planned revitalization effort in the Renaissance District
- Citizens/City Council/EDC participated in the Texas A&M study regarding downtown revitalization through the Texas Coastal Watershed Program
- Plans have been submitted and reviewed
- Special legal counsel has reviewed
- Finance Director prepares monthly finance reports. Fund balance for this projects is available.

HISTORY:

- Citizens/City Council/EDC participated in the Texas A&M study regarding downtown revitalization through the Texas Coastal Watershed Program

TARGET IMPLEMENTATION: Upon approval

SIGNIFICANT ACTION DATES:
10/18/2018 - Approved at the EDC/Council Joint Meeting

CITY COUNCIL AGENDA FORM

ACTION:

- ☐ Ordinance
- ☐ Resolution
- ☐ Special Presentation
- ☐ Proclamation
- ☐ Finance Report
- ☐ Public Hearing
- ☒ Other – Ratify Contract
- ☒ Mark if this item does not conflict with any Resolution, Ordinance or City Charter, policies, procedures

Cost Details:	
Budgeted	
Actual Bid	$887,849
Estimated Expenditure	$887,849
Acct. Name(s)	19-6020-00-00-401LAU
Line Items #	
Other Funding	

STAFF'S RECOMMENDATION: Motion to ratify the contract between La Marque Economic Development Corporation and Mike Bricker & Associates, Incorporated and the associated bid for the renovation of 401 Laurel

FISCAL IMPACT:
The current leases that are in place will transition a long-time vacant center that produces zero revenue into an economic driver for downtown.

AIA® Document A101™ – 2017

Standard Form of Agreement Between Owner and Contractor where the basis of payment is a Stipulated Sum

AGREEMENT made as of the Fifteenth day of November in the year Two Thousand Eighteen
(In words, indicate day, month and year.)

BETWEEN the Owner:
(Name, legal status, address and other information)

La Marque Economic Development Corporation
1130 1st Street
La Marque, Texas 77568
Telephone Number: 409-938-9258

and the Contractor:
(Name, legal status, address and other information)

Mike Bricker & Associates, Inc.
PO Box 1467 (2002 Gill Road)
Dickinson, Texas 77539
Telephone Number: 281-337-1856
Fax Number: 281-337-5113

for the following Project:
(Name, location and detailed description)

La Marque Renaissance District
401 Laurel St. La Marque TX 77568
Demo Remodel

The Architect:
(Name, legal status, address and other information)

Resource Planning Associates (RPA, LLC).
Robert A Randall, Architect
3027 Marina Bay Drive, Suite 240
League City, Texas 77573
Telephone Number: 281-334-3838

The Owner and Contractor agree as follows.

ADDITIONS AND DELETIONS: The author of this document has added information needed for its completion. The author may also have revised the text of the original AIA standard form. An *Additions and Deletions Report* that notes added information as well as revisions to the standard form text is available from the author and should be reviewed. A vertical line in the left margin of this document indicates where the author has added necessary information and where the author has added to or deleted from the original AIA text.

This document has important legal consequences. Consultation with an attorney is encouraged with respect to its completion or modification.

The parties should complete A101™–2017, Exhibit A, Insurance and Bonds, contemporaneously with this Agreement. AIA Document A201™–2017, General Conditions of the Contract for Construction, is adopted in this document by reference. Do not use with other general conditions unless this document is modified.

Init.

AIA Document A101™ – 2017. Copyright © 1915, 1918, 1925, 1937, 1951, 1958, 1961, 1963, 1967, 1974, 1977, 1987, 1991, 1997, 2007 and 2017 by The American Institute of Architects. **All rights reserved. WARNING: This AIA® Document is protected by U.S. Copyright Law and International Treaties.** Unauthorized reproduction or distribution of this AIA® Document, or any portion of it, may result in severe civil and criminal penalties, and will be prosecuted to the maximum extent possible under the law. This document was produced by AIA software at 12:11:44 ET on 11/01/2018 under Order No. 0650395698 which expires on 07/07/2019, and is not for resale.
User Notes: La Marque Renaissance District - Mike Bricker & Associates Inc. (3B9ADA43)

TABLE OF ARTICLES

1 THE CONTRACT DOCUMENTS

2 THE WORK OF THIS CONTRACT

3 DATE OF COMMENCEMENT AND SUBSTANTIAL COMPLETION

4 CONTRACT SUM

5 PAYMENTS

6 DISPUTE RESOLUTION

7 TERMINATION OR SUSPENSION

8 MISCELLANEOUS PROVISIONS

9 ENUMERATION OF CONTRACT DOCUMENTS

EXHIBIT A INSURANCE AND BONDS

ARTICLE 1 THE CONTRACT DOCUMENTS

The Contract Documents consist of this Agreement, Conditions of the Contract (General, Supplementary, and other Conditions), Drawings, Specifications, Addenda issued prior to execution of this Agreement, other documents listed in this Agreement, and Modifications issued after execution of this Agreement, all of which form the Contract, and are as fully a part of the Contract as if attached to this Agreement or repeated herein. The Contract represents the entire and integrated agreement between the parties hereto and supersedes prior negotiations, representations, or agreements, either written or oral. An enumeration of the Contract Documents, other than a Modification, appears in Article 9.

ARTICLE 2 THE WORK OF THIS CONTRACT

The Contractor shall fully execute the Work described in the Contract Documents, except as specifically indicated in the Contract Documents to be the responsibility of others.

ARTICLE 3 DATE OF COMMENCEMENT AND SUBSTANTIAL COMPLETION

§ 3.1 The date of commencement of the Work shall be:
(Check one of the following boxes.)

[X] The date of this Agreement.

[ ] A date set forth in a notice to proceed issued by the Owner.

[ ] Established as follows:
(Insert a date or a means to determine the date of commencement of the Work.)

If a date of commencement of the Work is not selected, then the date of commencement shall be the date of this Agreement.

§ 3.2 The Contract Time shall be measured from the date of commencement of the Work: Approximately 135 calendar days plus holidays and rain days.

§ 3.3 Substantial Completion

Init. / **AIA Document A101™ – 2017.** Copyright © 1915, 1918, 1925, 1937, 1951, 1958, 1961, 1963, 1967, 1974, 1977, 1987, 1991, 1997, 2007 and 2017 by The American Institute of Architects. **All rights reserved.** WARNING: This AIA® Document is protected by U.S. Copyright Law and International Treaties. Unauthorized reproduction or distribution of this AIA® Document, or any portion of it, may result in severe civil and criminal penalties, and will be prosecuted to the maximum extent possible under the law. This document was produced by AIA software at 12:11:44 ET on 11/01/2018 under Order No. 0650395698 which expires on 07/07/2019, and is not for resale.
User Notes: La Marque Renaissance District - Mike Bricker & Associates Inc. (3B9ADA43)

§ 3.3.1 Subject to adjustments of the Contract Time as provided in the Contract Documents, the Contractor shall achieve Substantial Completion of the entire Work:
(Check one of the following boxes and complete the necessary information.)

[X] Not later than (135) calendar days from the date of commencement of the Work: Not including rain days or holidays

[ ] By the following date:

§ 3.3.2 Subject to adjustments of the Contract Time as provided in the Contract Documents, if portions of the Work are to be completed prior to Substantial Completion of the entire Work, the Contractor shall achieve Substantial Completion of such portions by the following dates:

Portion of Work	Substantial Completion Date
Exterior	

§ 3.3.3 If the Contractor fails to achieve Substantial Completion as provided in this Section 3.3, liquidated damages, if any, shall be assessed as set forth in Section 4.5.

ARTICLE 4 CONTRACT SUM

§ 4.1 The Owner shall pay the Contractor the Contract Sum in current funds for the Contractor's performance of the Contract. The Contract Sum shall be Eight Hundred Eighty-seven Thousand Eight Hundred Forty-nine Dollars and Zero Cents ($ 887,849.00), subject to additions and deductions as provided in the Contract Documents.

§ 4.2 Alternates

§ 4.2.1 Alternates, if any, included in the Contract Sum:

Item	Price
None	

§ 4.2.2 Subject to the conditions noted below, the following alternates may be accepted by the Owner following execution of this Agreement. Upon acceptance, the Owner shall issue a Modification to this Agreement.
(Insert below each alternate and the conditions that must be met for the Owner to accept the alternate.)

Item	Price	Conditions for Acceptance

§ 4.3 Allowances, if any, included in the Contract Sum:
(Identify each allowance.)

Item	Price
Contractor Carpentry Contingency	$30,000.00

§ 4.4 Unit prices, if any:
(Identify the item and state the unit price and quantity limitations, if any, to which the unit price will be applicable.)

Item	Units and Limitations	Price per Unit ($0.00)
None		

§ 4.5 Liquidated damages, if any:
(Insert terms and conditions for liquidated damages, if any.)

None

§ 4.6 Other:
(Insert provisions for bonus or other incentives, if any, that might result in a change to the Contract Sum.)

Init. / **AIA Document A101™ – 2017.** Copyright © 1915, 1918, 1925, 1937, 1951, 1958, 1961, 1963, 1967, 1974, 1977, 1987, 1991, 1997, 2007 and 2017 by The American Institute of Architects. **All rights reserved. WARNING: This AIA® Document is protected by U.S. Copyright Law and International Treaties. Unauthorized reproduction or distribution of this AIA® Document, or any portion of it, may result in severe civil and criminal penalties, and will be prosecuted to the maximum extent possible under the law.** This document was produced by AIA software at 12:11:44 ET on 11/01/2018 under Order No. 0650395698 which expires on 07/07/2019, and is not for resale.
User Notes: La Marque Renaissance District - Mike Bricker & Associates Inc. (3B9ADA43)

Exclusions:
Impact fees, Utility fees, Meter or Tap fees, Assessment fees, Mud fees, Permit fees
Phone, Data, AV or Computer Service lines, wiring or equipment
Appliances, Furnishings or Equipment
Signage, Landscaping
Third Party Inspections - If Required, ADA Inspection, Testing - By Owner
Builders Risk Insurance - to be Billed Direct to Owner
Security Alarm, Fire Alarm, Emergency Generator - By Owner
Tennant Build Out
Approved Substitute Used for Winn Doors to Comply with Handicap and Windstorm compliance
Concrete Piers and/or Footing Structural Design
Fire Sprinkler System or Fire Lines or Equipment
Grease Trap
TLDR Inspection or Reviews
Existing Sanitary Sewer or Sanitary Sewer Lines other than Tie In to Existing
Permit Drawing Revisions (If Any)

EXCLUDE NOTES AS LISTED ON SHEET S-2 OF 12:
1. SETE IS NOT LIABLE FOR DEFLECTION ISSUES OF EXISTING BAR ROOF TRUSSES. BAR TRUSSES BY OTHERS. NEW FACADE AT PARAPET LOCATION TO HAVE A WEIGHT PRESSURE OF 1 LB/FT^2 MAX.
2. WOOD TREATMENT: WHERE LUMBER AND/OR PLYWOOD IS CUT OR DRILLED AFTER TREATMENT, THE TREATED SURFACE SHALL BE FIELD TREATED WITH COPPER NAPHTHENATE. THE CONCENTRATION OF WHICH SHALL CONTAIN MINIMUM OF 2 PERCENT COPPER MEATL (METAL), BY REPEATED BRUSHING, DIPPING OR SOAKING UNTIL THE WOOD ABSORBS NO MORE PRESERVATIVE.
3. STRUCTURAL DESIGN FOR CMU WALLS
4. UNFORSEEN CONDITIONS NOT SHOWN OR CLOUDED IN DRAWINGS.

ARTICLE 5 PAYMENTS
§ 5.1 Progress Payments
§ 5.1.1 Based upon Applications for Payment submitted to the Architect by the Contractor and Certificates for Payment issued by the Architect, the Owner shall make progress payments on account of the Contract Sum to the Contractor as provided below and elsewhere in the Contract Documents.

§ 5.1.2 The period covered by each Application for Payment shall be one calendar month ending on the last day of the month, or as follows:

§ 5.1.3 Provided that an Application for Payment is received by the Architect not later than the First day of a month, the Owner shall make payment of the amount certified to the Contractor not later than the Tenth day of the same month. If an Application for Payment is received by the Architect after the application date fixed above, payment of the amount certified shall be made by the Owner not later than ~~Ten (10)~~ days after the Architect receives the Application for Payment.
AA Thirty (30)
(Federal, state or local laws may require payment within a certain period of time.)

§ 5.1.4 Each Application for Payment shall be based on the most recent schedule of values submitted by the Contractor in accordance with the Contract Documents. The schedule of values shall allocate the entire Contract Sum among the various portions of the Work. The schedule of values shall be prepared in such form, and supported by such data to substantiate its accuracy, as the Architect may require. This schedule of values shall be used as a basis for reviewing the Contractor's Applications for Payment.

§ 5.1.5 Applications for Payment shall show the percentage of completion of each portion of the Work as of the end of the period covered by the Application for Payment.

Init.
/
AIA Document A101™ – 2017. Copyright © 1915, 1918, 1925, 1937, 1951, 1958, 1961, 1963, 1967, 1974, 1977, 1987, 1991, 1997, 2007 and 2017 by The American Institute of Architects. **All rights reserved. WARNING:** This AIA® Document is protected by U.S. Copyright Law and International Treaties. Unauthorized reproduction or distribution of this AIA® Document, or any portion of it, may result in severe civil and criminal penalties, and will be prosecuted to the maximum extent possible under the law. This document was produced by AIA software at 12:11:44 ET on 11/01/2018 under Order No. 0650395698 which expires on 07/07/2019, and is not for resale.
User Notes: La Marque Renaissance District - Mike Bricker & Associates Inc.
4
(3B9ADA43)

§ 5.1.6 In accordance with AIA Document A201™–2017, General Conditions of the Contract for Construction, and subject to other provisions of the Contract Documents, the amount of each progress payment shall be computed as follows:

§ 5.1.6.1 The amount of each progress payment shall first include:

- **.1** That portion of the Contract Sum properly allocable to completed Work;
- **.2** That portion of the Contract Sum properly allocable to materials and equipment delivered and suitably stored at the site for subsequent incorporation in the completed construction, or, if approved in advance by the Owner, suitably stored off the site at a location agreed upon in writing; and
- **.3** That portion of Construction Change Directives that the Architect determines, in the Architect's professional judgment, to be reasonably justified.

§ 5.1.6.2 The amount of each progress payment shall then be reduced by:

- **.1** The aggregate of any amounts previously paid by the Owner;
- **.2** The amount, if any, for Work that remains uncorrected and for which the Architect has previously withheld a Certificate for Payment as provided in Article 9 of AIA Document A201–2017;
- **.3** Any amount for which the Contractor does not intend to pay a Subcontractor or material supplier, unless the Work has been performed by others the Contractor intends to pay;
- **.4** For Work performed or defects discovered since the last payment application, any amount for which the Architect may withhold payment, or nullify a Certificate of Payment in whole or in part, as provided in Article 9 of AIA Document A201–2017; and
- **.5** Retainage withheld pursuant to Section 5.1.7.

§ 5.1.7 Retainage

§ 5.1.7.1 For each progress payment made prior to Substantial Completion of the Work, the Owner may withhold the following amount, as retainage, from the payment otherwise due:
(Insert a percentage or amount to be withheld as retainage from each Application for Payment. The amount of retainage may be limited by governing law.)

5% - Five Percent

§ 5.1.7.1.1 The following items are not subject to retainage:
(Insert any items not subject to the withholding of retainage, such as general conditions, insurance, etc.)

§ 5.1.7.2 Reduction or limitation of retainage, if any, shall be as follows:
(If the retainage established in Section 5.1.7.1 is to be modified prior to Substantial Completion of the entire Work, including modifications for Substantial Completion of portions of the Work as provided in Section 3.3.2, insert provisions for such modifications.)

§ 5.1.7.3 Except as set forth in this Section 5.1.7.3, upon Substantial Completion of the Work, the Contractor may submit an Application for Payment that includes the retainage withheld from prior Applications for Payment pursuant to this Section 5.1.7. The Application for Payment submitted at Substantial Completion shall not include retainage as follows:
(Insert any other conditions for release of retainage upon Substantial Completion.)

§ 5.1.8 If final completion of the Work is materially delayed through no fault of the Contractor, the Owner shall pay the Contractor any additional amounts in accordance with Article 9 of AIA Document A201–2017.

§ 5.1.9 Except with the Owner's prior approval, the Contractor shall not make advance payments to suppliers for materials or equipment which have not been delivered and stored at the site.

AIA Document A101™ – 2017. Copyright © 1915, 1918, 1925, 1937, 1951, 1958, 1961, 1963, 1967, 1974, 1977, 1987, 1991, 1997, 2007 and 2017 by The American Institute of Architects. **All rights reserved. WARNING:** This AIA® Document is protected by U.S. Copyright Law and International Treaties. Unauthorized reproduction or distribution of this AIA® Document, or any portion of it, may result in severe civil and criminal penalties, and will be prosecuted to the maximum extent possible under the law. This document was produced by AIA software at 12:11:44 ET on 11/01/2018 under Order No. 0650395698 which expires on 07/07/2019, and is not for resale.
User Notes: La Marque Renaissance District - Mike Bricker & Associates Inc. (3B9ADA43)

§ 5.2 Final Payment

§ 5.2.1 Final payment, constituting the entire unpaid balance of the Contract Sum, shall be made by the Owner to the Contractor when

.1 the Contractor has fully performed the Contract except for the Contractor's responsibility to correct Work as provided in Article 12 of AIA Document A201–2017, and to satisfy other requirements, if any, which extend beyond final payment; and

.2 a final Certificate for Payment has been issued by the Architect.

§ 5.2.2 The Owner's final payment to the Contractor shall be made no later than 30 days after the issuance of the Architect's final Certificate for Payment, or as follows:

All Inspections and any Modifications Required from the Inspections are Completed and Approved (Contract Items Only)

§ 5.3 Interest

Payments due and unpaid under the Contract shall bear interest from the date payment is due at the rate stated below, or in the absence thereof, at the legal rate prevailing from time to time at the place where the Project is located.
(Insert rate of interest agreed upon, if any.)

8.00 % per annum

ARTICLE 6 DISPUTE RESOLUTION

§ 6.1 Initial Decision Maker

The Architect will serve as the Initial Decision Maker pursuant to Article 15 of AIA Document A201–2017, unless the parties appoint below another individual, not a party to this Agreement, to serve as the Initial Decision Maker.
(If the parties mutually agree, insert the name, address and other contact information of the Initial Decision Maker, if other than the Architect.)

§ 6.2 Binding Dispute Resolution

For any Claim subject to, but not resolved by, mediation pursuant to Article 15 of AIA Document A201–2017, the method of binding dispute resolution shall be as follows:
(Check the appropriate box.)

[X] Arbitration pursuant to Section 15.4 of AIA Document A201–2017

[ ] Litigation in a court of competent jurisdiction

[ ] Other *(Specify)*

If the Owner and Contractor do not select a method of binding dispute resolution, or do not subsequently agree in writing to a binding dispute resolution method other than litigation, Claims will be resolved by litigation in a court of competent jurisdiction.

ARTICLE 7 TERMINATION OR SUSPENSION

§ 7.1 The Contract may be terminated by the Owner or the Contractor as provided in Article 14 of AIA Document A201–2017.

§ 7.1.1 If the Contract is terminated for the Owner's convenience in accordance with Article 14 of AIA Document A201–2017, then the Owner shall pay the Contractor a termination fee as follows:

Init.

AIA Document A101™ – 2017. Copyright © 1915, 1918, 1925, 1937, 1951, 1958, 1961, 1963, 1967, 1974, 1977, 1987, 1991, 1997, 2007 and 2017 by The American Institute of Architects. **All rights reserved.** WARNING: This AIA® Document is protected by U.S. Copyright Law and International Treaties. Unauthorized reproduction or distribution of this AIA® Document, or any portion of it, may result in severe civil and criminal penalties, and will be prosecuted to the maximum extent possible under the law. This document was produced by AIA software at 12:11:44 ET on 11/01/2018 under Order No. 0650395698 which expires on 07/07/2019, and is not for resale.
User Notes: La Marque Renaissance District - Mike Bricker & Associates Inc.

(Insert the amount of, or method for determining, the fee, if any, payable to the Contractor following a termination for the Owner's convenience.)

§ 7.2 The Work may be suspended by the Owner as provided in Article 14 of AIA Document A201–2017.

ARTICLE 8 MISCELLANEOUS PROVISIONS

§ 8.1 Where reference is made in this Agreement to a provision of AIA Document A201–2017 or another Contract Document, the reference refers to that provision as amended or supplemented by other provisions of the Contract Documents. No change orders

§ 8.2 The Owner's representative:
(Name, address, email address, and other information)

Alex Getty
1130 1st Street
La Marque, Texas 77568
Telephone Number: 409-938-9258

Mobile Number: 409-370-8757
Email Address: agetty@lmedc.com

§ 8.3 The Contractor's representative:
(Name, address, email address, and other information)

Mike Bricker
PO Box 1467 (2002 Gill Road)
Dickinson, Texas 77539
Telephone Number: 281-337-1856
Fax Number: 281-337-5113
Mobile Number: 281-850-7261
Email Address: mike@mikebricker.com

§ 8.4 Neither the Owner's nor the Contractor's representative shall be changed without ten days' prior notice to the other party.

§ 8.5 Insurance and Bonds

§ 8.5.1 The Owner and the Contractor shall purchase and maintain insurance as set forth in AIA Document A101™–2017, Standard Form of Agreement Between Owner and Contractor where the basis of payment is a Stipulated Sum, Exhibit A, Insurance and Bonds, and elsewhere in the Contract Documents.

§ 8.5.2 The Contractor shall provide bonds as set forth in AIA Document A101™–2017 Exhibit A, and elsewhere in the Contract Documents.

§ 8.6 Notice in electronic format, pursuant to Article 1 of AIA Document A201–2017, may be given in accordance with AIA Document E203™–2013, Building Information Modeling and Digital Data Exhibit, if completed, or as otherwise set forth below:
(If other than in accordance with AIA Document E203–2013, insert requirements for delivering notice in electronic format such as name, title, and email address of the recipient and whether and how the system will be required to generate a read receipt for the transmission.)

§ 8.7 Other provisions:

Contract Sum includes Framing Carpentry Contingency in the amount of $30.000.00

AIA Document A101™ – 2017. Copyright © 1915, 1918, 1925, 1937, 1951, 1958, 1961, 1963, 1967, 1974, 1977, 1987, 1991, 1997, 2007 and 2017 by The American Institute of Architects. **All rights reserved. WARNING: This AIA® Document is protected by U.S. Copyright Law and International Treaties.** Unauthorized reproduction or distribution of this AIA® Document, or any portion of it, may result in severe civil and criminal penalties, and will be prosecuted to the maximum extent possible under the law. This document was produced by AIA software at 12:11:44 ET on 11/01/2018 under Order No. 0650395698 which expires on 07/07/2019, and is not for resale.
User Notes: La Marque Renaissance District - Mike Bricker & Associates Inc. (3B9ADA43)

ARTICLE 9 ENUMERATION OF CONTRACT DOCUMENTS

§ 9.1 This Agreement is comprised of the following documents:

.1 AIA Document A101™–2017, Standard Form of Agreement Between Owner and Contractor

.2 AIA Document A101™–2017, Exhibit A, Insurance and Bonds

.3 AIA Document A201™–2017, General Conditions of the Contract for Construction

.4 AIA Document E203™–2013, Building Information Modeling and Digital Data Exhibit, dated as indicated below:
(Insert the date of the E203-2013 incorporated into this Agreement.)

.5 Drawings

Number	Title	Date
See Attachment "A"	401 Laurel, La Marque, Renaissance District	5/24/18

.6 Specifications

Section	Title	Date	Pages
None			

.7 Addenda, if any:

Number	Date	Pages
None		

Portions of Addenda relating to bidding or proposal requirements are not part of the Contract Documents unless the bidding or proposal requirements are also enumerated in this Article 9.

.8 Other Exhibits: Schedule Of Values Attachment "B" Including Framing Carpentry Contingency in the amount of $30,000.00
(Check all boxes that apply and include appropriate information identifying the exhibit where required.)

[ ] AIA Document E204™–2017, Sustainable Projects Exhibit, dated as indicated below:
(Insert the date of the E204-2017 incorporated into this Agreement.)

[ ] The Sustainability Plan:

Title	Date	Pages
None		

[ ] Supplementary and other Conditions of the Contract:

Document	Title	Date	Pages

.9 Other documents, if any, listed below:
(List here any additional documents that are intended to form part of the Contract Documents. AIA Document A201™–2017 provides that the advertisement or invitation to bid, Instructions to Bidders, sample forms, the Contractor's bid or proposal, portions of Addenda relating to bidding or proposal requirements, and other information furnished by the Owner in anticipation of receiving bids or

AIA Document A101™ – 2017. Copyright © 1915, 1918, 1925, 1937, 1951, 1958, 1961, 1963, 1967, 1974, 1977, 1987, 1991, 1997, 2007 and 2017 by The American Institute of Architects. **All rights reserved.** WARNING: This AIA® Document is protected by U.S. Copyright Law and International Treaties. Unauthorized reproduction or distribution of this AIA® Document, or any portion of it, may result in severe civil and criminal penalties, and will be prosecuted to the maximum extent possible under the law. This document was produced by AIA software at 12:11:44 ET on 11/01/2018 under Order No. 0650395698 which expires on 07/07/2019, and is not for resale.
User Notes: La Marque Renaissance District - Mike Bricker & Associates Inc. (3B9ADA43)

proposals, are not part of the Contract Documents unless enumerated in this Agreement. Any such documents should be listed here only if intended to be part of the Contract Documents.)

This Agreement entered into as of the day and year first written above.

OWNER *(Signature)*	**CONTRACTOR** *(Signature)*
Alex Getty, Executive Director	Mike BrickerNone
La Marque Economic Development Corporation	*Mike Bricker & Associates Inc.*
Date Signed:	*Date Signed:*

AIA Document A101™ – 2017. Copyright © 1915, 1918, 1925, 1937, 1951, 1958, 1961, 1963, 1967, 1974, 1977, 1987, 1991, 1997, 2007 and 2017 by The American Institute of Architects. **All rights reserved. WARNING: This AIA® Document is protected by U.S. Copyright Law and International Treaties. Unauthorized reproduction or distribution of this AIA Document, or any portion of it, may result in severe civil and criminal penalties, and will be prosecuted to the maximum extent possible under the law.** This document was produced by AIA software at 12:11:44 ET on 11/01/2018 under Order No. 0650395698 which expires on 07/07/2019, and is not for resale.
User Notes: La Marque Renaissance District - Mike Bricker & Associates Inc. (3B9ADA43)

MIKE BRICKER & ASSOCIATES INC.
P O BOX 1467
DICKINSON, TX 77539
281-337-1856
281-337-5113 FAX

Date : November 1, 2018

La Marque Reaissance District
401 Laurel
La Marque, Texas 77568
Project:Renovation

Contract: AIA 101-2017 Attachment "A" Page 1 of 3
Article 9.1.5

Index			Date
ARCHITECTURAL			
1	A0.0	Cover Sheet	08/22/18
2	A1.0	Master Site Plan	08/22/18
3	A1.1	Site Plan - Bldg 1	08/22/18
4	A2.0	Demolition Floor Plan	08/22/18
5	A2.1	Proposed Floor Plan	08/22/18
6	A2.2	Life Safety Plan & Code Info	08/22/18
7	A3.0	Roof Plan	08/22/18
8	A5.0	Exterior Elevations	08/22/18
9	A6.0	Building Sections	08/22/18
10	A7.0	Wall Sections	08/22/18
11	A7.1	Wall Sections	08/22/18
12	A7.2	Wall Sections	08/22/18
13	A9.0	Window & Door Schedule	08/22/18
14	A10.0	Reflected Ceiling Plan	08/22/18
MECHANICAL			
15	MD0.1	Demo Mechanical Floor Plan	08/15/18
16	M1.0	Specifications & Symbols	08/15/18
17	M1.1	Technical Schedules	08/15/18
18	M2.0a	Proposed Mechanical Floor Plan - Birdies	08/15/18
19	M2.0b	Proposed Mechanical Floor Plan -Art of Coffee	08/15/18
20	M3.0	Installation Detaila	08/15/18

Exhibit - Attachment "A" Drawings

La Marque Reaissance District
401 Laurel
La Marque, Texas 77568
Project:Renovation
Contract: AIA 101-2017 Attachment "A" Page 2 of 3
Article 9.1.5

Index			Date
ELECTRICAL			
21	ED.01	Demolition One Line Diagram	08/15/18
22	ED.2	Demolition Electrical Site Plan	08/15/18
23	ED.03	Demolition Lighting Floor Plan	08/15/18
24	ED.04	Demolition Power Floor Plan	08/15/18
25	E1.0a	One Line Diagram -Birdies	08/15/18
26	E1.0b	One Line Diagram -Art of Coffee	08/15/18
27	E1.1	Electric Notes & Symbol Legend	08/15/18
28	E1.2a	Electrical Panels - Birdies	08/15/18
29	E1.2b	Electrical Panels - Art of Coffee	08/15/18
30	E2.0	Electrical Mast Site Plan	08/15/18
31	E2.1	Photometric Plan	08/15/18
32	E2.2	Lighting Cut Sheets	08/15/18
33	E3.0a	Proposed Lighting Floor Plan - Birdies	08/15/18
34	E3.0b	Proposed Lighting Floor Plan -Art of Coffee	08/15/18
35	E4.0a	Proposed Power Floor Plan - Birdies	08/15/18
36	E4.0b	Proposed Power Floor Plan - Art of Coffee	08/15/18
37	E5.0a	Proposed Fire Alarm Floor Plan - Birdies	08/15/18
38	E5.0b	Proposed Fire Alarm Floor Plan -Art of Coffee	08/15/18
39	E5.1	Proposed Fire Alarm One Line Diagram	08/15/18
PLUMBING			
40	PM0.1	Demolition Sanitary Sewer Plan	08/15/18
41	PM0.2	DemolitionDomestic Water Plan	08/15/18
42	P1.0	Plumbing Notes & Symbols	02/23/15
43	P1.1a	Plumbing Schedule & Details - Birdies	08/15/18
44	P1.1b	Plumbing Schedule & Details - Art of Coffee	08/15/18
45	P2.0	Plumbing Master Site Plan	08/15/18
46	P3.0a	Proposed Sanitary Sewer Plan - Birdies	08/15/18
47	P3.0b	Proposed Sanitary Sewer Plan - Art of Coffee	08/15/18
48	P3.1	Storm Sewer Roof Plan	08/15/18
49	P4.0a	Proposed Domestic Water Plan - Birdies	08/15/18
50	P4.0b	Proposed Domestic Water Plan - Art of Coffee	08/15/18
51	P5.0a	Plumbing Risers & Details - Birdies	08/15/18
52	P5.0b	Plumbing Risers & Details - Art of Coffee	08/15/18
53	P5.1	Plumbing Specification Sheet	08/15/18
54	P5.2	Plumbing Specification Sheet	08/15/18

Exhibit - Attachment "A" Drawings

La Marque Reaissance District
401 Laurel
La Marque, Texas 77568
Project:Renovation

Contract: AIA 101-2017 Attachment "A" Page 3 of 3
Article 9.1.5

Index			Date
STRUCTURAL			
55	S1	Inspection Sheet	08/30/18
56	S2	General Requirements	08/30/18
57	S3	Elevation Views	08/30/18
58	S3.1	Front Wall Fraing Layout	08/30/18
59	S4	Exist. Floor Layout/Typ. Parapet Details	08/30/18
60	S5	New Floor layout	08/30/18
61	S6	New Roof Layout	08/30/18
62	S7	Exist/ New Cross Section w/Details	08/30/18
63	S8	View A-A & View F-F	08/30/18
64	S8.1	Sections B-B/C-C/D-D/E-E	08/30/18
65	S9	Footing Details	08/30/18
66	S10	General Clip/Strap Details	08/30/18
67	S11	General Details 2	08/30/18
68	S12	General Details 3	08/30/18

Exhibit Attachment B -Schedule of Values

Lamarque Renaissance
Prepared by Mike Bricker & Associates, Inc.
Date: 10/2018

Division No.	Division Description	Item No.	Sub-Item Description		Item Total	Division Total
1	***General Conditions***					
		Div 1	General Documents			
		1010	Summary Of Work:			
			Field Engineering/Survey	NICL		
			Field Temporary facilities incl.	INCL		
			Testing Allowance	NICL		
		1010	Miscl General Conditions		$48,715	
			Project Supervision	INCL		
			Project Manager incl.	INCL		
			TAS/SWPP Compliance	NICL		
	****To be Billed to owner direct***		*Builders Risk Insurance	NICL		
			Workers Comp/Builders Liabilityinsurance	INCL		
			Builders Risk Insurance	NICL		
			3rd Party Inspections	NICL		
			Payment & Performance Bond		$8,137	
			Profit & OH		$40,735	
			Division 1 Total			***$97,587***
2	***Sitework/Demolition***					
		2070	Anterior & Auxiliary site work/Demo		$34,400	
			Parking lot/Demolition paving approaches	INCL		
		2070	Demo Landscape areas	INCL		
			Demo Sidewalk entrance			
			Demo curb	INCL		
			Demo concrete footings	INCL		
			Saw cut/plumbing trencehes		$7,599	
		2071	Pavement markings & ADA signage		$4,475	
			Division 2 Total			***$46,474***
3	***Concrete***					
		3300	Material & Placing - foundation		$45,905	
		3301	Site, walks,pole bases priv walks,12/36 piers,	INCL		
			demo Pour back trench/cuts/dumpster pad pavement/6" curbs	INCL		
			Division 3 Total			***$45,905***
4	***Masonry***					
		4200	Masonry/CMU/Pavers deleted		$141,875	
		4201	Brick/Stone dumpster/Caststone/Scaffolding	INCL		
		4203	Thin brcik units/CMIU//KS brick/demo	INCL		
			Division 4 Total			**$141,875**

Mike Bricker, President
10/2018

5	***Metals***				
		5500	Canopies/Avadek/Installation	$36,185	
		5120	Misc.Metal Fabrication/Bollards	$2,237	
	*	5121	Misc. Steel Items/bolts/Screws/Brackets	$16,500	
	*	5122	Decorative Iron Columns	$11,600	
		5123	Decorative Shutters	$23,600	
			Division 5 Total		**$90,122**
6	***Wood & Plastic***				
		6402	Architectural Woodwork	NICL	
		6100	Interior wall framing/Sht rck/Finishes	$31,044	
	*	6200	Wood framing contingencey	$30,000	
		6210	Misc carpentry labor	INCL	
		6211	Patio Porch Framing framing/Material	$45,735	
			Division 6 Total		**$106,779**
7	***Thermal & Moisture Protection***				
		7600	Wall Dampproofing/Vapor retarder/caulking	NICL	
		7210	Insulation, Batt & Blanket	$1,200	
		7210	Insulation	$15,000	
		7901	Roofing Material & Labor	$42,520	
		7251	Sheetmetal flashings	INCL	
			Division 7 Total		**$58,720**
8	***Doors & Windows***				
		8111	HM Doors & Frames	$2,925	
		8111	PL Doors/Incl Sanctuary entrance doors	$5,400	
		8111	Installation/doors/Windows/ hardware labor	$2,000	
		8305	Specialty Windows glass allowance	$17,855	
	*	8410	Door (x2 sets) Entrance Doors (Winn NIC)	$8,000	
		8411	Aluminum Store front Doors	INCL	
		8710	Hardware Allowance	INCL	
		8711	Aluminum Store front hardware	NICL	
	*	8712	Glass/Glazing/Mirrors	$10,046	
			Division 8 Total		**$46,226**
9	***Finishes***				
		9900	Painting	$12,000	
			Repair exising exterior surfaces	$5,000	
			Division 9 Total		**$17,000**
10	***Specialties***				
		10155	Toilet Accessories/ADA Grab bars	NICL	
		10265	Accessories	NICL	
		10425	Specialties A/V Data Phone	NICL	
		10426	Interior Signage	NICL	
		10800	Fire Ext.'s	NICL	
			Division 10 Total		**$0**

Mike Brickel President
10/2018

11	***Equipment***				
		11400 Phone/Data/Not included	NICL		
		Division 11 Total			**$0**
12	***Furnishings***				
		Not included			
		Division 12 Total			**$0**
13	***Specialties Service***	Fire Sprinkler system/ Fire SS riser/Equip	NICL		
		Ext fire line/Fire vault/Vault equip	NICL		
14	***Not Used***				**$0**
15	***Mechanical***				
		15010 Plumbing		$66,500	
		Water service line	INCL		
		Sanitary Sewer (Tie into exising)	INCL		
		15011 HVAC		$87,854	
		Division 15 Total			**$154,354**
16	***Electrical***				
		16010 Wire & Conduit/Fixtures		$72,377	
		Fire Alarm System			
		Division 16 Total			**$72,377**
		SUBTOTAL			**$877,419**
		Budget TOTAL COST			**$887,849**

Cost Not Included Above:		
Builders Risk Windstorm Insurance	NICL	
Bldg Permit Cost	NICL	
Pmt & Perfomance Bond	NICL	
No exterior signage included	NICL	
No Impact fees, other permit fees, tap fees	NICL	
Landscaping	NICL	
Contingency Inclided @wd framing Incl		$30,000
We have included $5000 for existing surfaces		$5,000
*We have not used Winn door Mfg type	NICL	
No Phone/Audio/Data/ video included	NICL	
NICL= Not Included in estimate	NICL	
INCL= Included in estimate	INCL	

Mike Breitbach President
10/2018

CERTIFICATE OF LIABILITY INSURANCE

DATE (MM/DD/YYYY): 9/27/2018

THIS CERTIFICATE IS ISSUED AS A MATTER OF INFORMATION ONLY AND CONFERS NO RIGHTS UPON THE CERTIFICATE HOLDER. THIS CERTIFICATE DOES NOT AFFIRMATIVELY OR NEGATIVELY AMEND, EXTEND OR ALTER THE COVERAGE AFFORDED BY THE POLICIES BELOW. THIS CERTIFICATE OF INSURANCE DOES NOT CONSTITUTE A CONTRACT BETWEEN THE ISSUING INSURER(S), AUTHORIZED REPRESENTATIVE OR PRODUCER, AND THE CERTIFICATE HOLDER.

IMPORTANT: If the certificate holder is an ADDITIONAL INSURED, the policy(ies) must be endorsed. If SUBROGATION IS WAIVED, subject to the terms and conditions of the policy, certain policies may require an endorsement. A statement on this certificate does not confer rights to the certificate holder in lieu of such endorsement(s).

PRODUCER
Rust Ewing Watt and Haney, Inc.
7900 Emmett Lowry Expressway
Texas City TX 77591

CONTACT NAME: Lisa Malmberg ACSR, CRIS
PHONE (AC, No, Ext): (409)934-8000 FAX (AC, No): (409)935-1893
E-MAIL ADDRESS: lisa_malmberg@rustewing.com

INSURER(S) AFFORDING COVERAGE	NAIC #
INSURER A: Central Mutual Ins Co	20230
INSURER B: Texas Mutual Insurance Company	22945
INSURER C:	
INSURER D:	
INSURER E:	
INSURER F:	

INSURED
Mike Bricker & Associates, Inc.
P. O. Box 1467
Dickinson TX 77539

COVERAGES CERTIFICATE NUMBER: 18/19 Sept REVISION NUMBER:

THIS IS TO CERTIFY THAT THE POLICIES OF INSURANCE LISTED BELOW HAVE BEEN ISSUED TO THE INSURED NAMED ABOVE FOR THE POLICY PERIOD INDICATED. NOTWITHSTANDING ANY REQUIREMENT, TERM OR CONDITION OF ANY CONTRACT OR OTHER DOCUMENT WITH RESPECT TO WHICH THIS CERTIFICATE MAY BE ISSUED OR MAY PERTAIN, THE INSURANCE AFFORDED BY THE POLICIES DESCRIBED HEREIN IS SUBJECT TO ALL THE TERMS, EXCLUSIONS AND CONDITIONS OF SUCH POLICIES. LIMITS SHOWN MAY HAVE BEEN REDUCED BY PAID CLAIMS.

INSR LTR	TYPE OF INSURANCE	ADDL INSD	SUBR WVD	POLICY NUMBER	POLICY EFF (MM/DD/YYYY)	POLICY EXP (MM/DD/YYYY)	LIMITS	
A	X COMMERCIAL GENERAL LIABILITY CLAIMS-MADE / X OCCUR GEN'L AGGREGATE LIMIT APPLIES PER: X POLICY / PRO-JECT / LOC OTHER:			CLP 7985020 25	9/16/2018	9/16/2019	EACH OCCURRENCE	$ 1,000,000
							DAMAGE TO RENTED PREMISES (Ea occurrence)	$ 300,000
							MED EXP (Any one person)	$ 5,000
							PERSONAL & ADV INJURY	$ 1,000,000
							GENERAL AGGREGATE	$ 2,000,000
							PRODUCTS - COMP/OP AGG	$ 2,000,000
							Emdt	$
A	AUTOMOBILE LIABILITY X ANY AUTO ALL OWNED AUTOS / SCHEDULED AUTOS X HIRED AUTOS / X NON-OWNED AUTOS			BAP 7983432 25	9/16/2018	9/16/2019	COMBINED SINGLE LIMIT (Ea accident)	$ 1,000,000
							BODILY INJURY (Per person)	$
							BODILY INJURY (Per accident)	$
							PROPERTY DAMAGE (Per accident)	$
								$
A	X UMBRELLA LIAB / X OCCUR EXCESS LIAB / CLAIMS-MADE DED / RETENTION $			CXS 7985021 25	9/16/2018	9/16/2019	EACH OCCURRENCE	$ 2,000,000
							AGGREGATE	$ 2,000,000
								$
B	WORKERS COMPENSATION AND EMPLOYERS' LIABILITY ANY PROPRIETOR/PARTNER/EXECUTIVE OFFICER/MEMBER EXCLUDED? (Mandatory in NH) Y/N X If yes, describe under DESCRIPTION OF OPERATIONS below		N/A	8001691517	9/16/2018	9/16/2019	X PER STATUTE / OTH-ER	
							E.L. EACH ACCIDENT	$ 1,000,000
							E.L. DISEASE - EA EMPLOYEE	$ 1,000,000
							E.L. DISEASE - POLICY LIMIT	$ 1,000,000

DESCRIPTION OF OPERATIONS / LOCATIONS / VEHICLES (ACORD 101, Additional Remarks Schedule, may be attached if more space is required)
The Auto & General Liability policies include a blanket automatic additional insured endorsement that provides additional insured status to the certificate holder and the Auto, General Liability and Work Comp policies include a blanket automatic waiver of subrogation endorsement that provides waiver of subrogation wording to the certificate holder. These endorsements, to the extent provided in the policy, all apply when there is a written contract between the named insured and the certificate holder that requires such status. Umbrella follows form.

CERTIFICATE HOLDER
La Marque Economic Development Corp.
1130 1st Street
La Marque, Texas 77568

CANCELLATION
SHOULD ANY OF THE ABOVE DESCRIBED POLICIES BE CANCELLED BEFORE THE EXPIRATION DATE THEREOF, NOTICE WILL BE DELIVERED IN ACCORDANCE WITH THE POLICY PROVISIONS.

AUTHORIZED REPRESENTATIVE
G Blystone CIC/LISAM R. C. Blystone

© 1988-2014 ACORD CORPORATION. All rights reserved.

ACORD 25 (2014/01)
IN3025 (201401)

The ACORD name and logo are registered marks of ACORD

Mike Bricker & Associates, Inc.

PO BOX 1467
Dickinson, Texas 77539

Phone: 281-337-1856
Fax: 281-337-5113

Transmittal

No. LMRD10172018

Project: LaMarque Renaissance District
401 Laurel
La Marque, TX

Date: 10/17/18

TO: RPA Architects

REF: Schedule of Values

ATTN: Bob Randall

WE ARE SENDING:		SUBMITTED FOR:		ACTION TAKEN:	
	Shop Drawings		Approval		Reviewed , Comments noted
	Letter	√	Your Use		Approved as Noted
	Prints	√	As Requested		Returned After Loan
	Change Order		Review & Comment		Resubmit
	Plans				Submit
	Samples	**SENT VIA:**			Returned
	Specifications		Attached		Returned for Corrections
√	Other:	√	Separate Cover Via: Email		Due Date:

ITEM	PACKAGE	SUBMITTAL	DRAWING	REV.	ITEM NO.	COPIES	DATE	DESCRIPTION	STATUS
001	Preliminary Revised Bid #3						10/17/18		
002	Subcontract List Final						10/17/18		

Bob: Please note the updated schedule of values with cost previsions noted:

Increase w/ Basic Explanation:

Div 2 Concrete Add $12,782.00

10 Piers
Walks
Demo
Dumpster Pad
Level Wash Area

Div 4 Masonry Add $7,000.00

Add Bond Beams
Add CMU
Latticrete

Div 5	Metals		Add	$17,710.00
		Bolts/Brackets/ Labor per Structural Drawings		
Div 6	Wood		Add	$36,000.00
		We have included $30,000.00 Contingency for Unknown Conditions		
Div 9	Finishes		Add	$5,000.00
		Repair existing Surfaces to be painted.		

CC.

Signed: Mike Bricker, President
by: Alecia LaRose, Admin Assistant

Preliminary Bid - Revised Bid #3

Lamarque Renaissance Preliminary
Prepared by Mike Bricker & Associates, Inc.
Date: October 2018

Division No.	Division Description	Item No.	Sub-Item Description	Item Total	Division Total
1	***General Conditions***				
		Div 1	General Documents		
		1010	Summary Of Work:		
			Field Engineering/Survey	NICL	
			Field Temporary facilities incl.	INCL	
			Testing Allowance	NICL	
		1010	Miscl General Conditions	$48,715	
			Project Supervision	INCL	
			Project Manager incl.	INCL	
			TAS/SWPP Compliance	NICL	
			Builders Risk Insurance	NICL	
			Workers Comp/Builders Liabilityinsurance	INCL	
			Builders Risk Insurance	NICL	
			3rd Party Inspections	NICL	
			Payment & Performance Bond not included	$8,137	
			Profit & OH	$40,735	
			Division 1 Total		***$97,587***
2	***Sitework/Demolition***				
		2070	Anterior & Auxiliary site work/Demo	$34,400	
			Parking lot/Demolition paving approaches	INCL	
		2070	Demo Landscape areas	INCL	
			Demo Sidewalk entrance		
			Demo curb	INCL	
			Demo concrete footings	INCL	
			Saw cut/plumbing trencehes	$7,599	
		2071	Pavement markings & ADA signage	$4,475	
			Division 2 Total		***$46,474***
3	***Concrete***				
		3300	Material & Placing - foundation	$45,905	
		3301	Site, walks,pole bases priv walks,12/36 piers,	INCL	
			demo Pour back trench/cuts/dumpster pad	INCL	
			pavement/6" curbs		
			Division 3 Total		***$45,905***
4	***Masonry***				
		4200	Masonry/CMU/Pavers deleted	$141,875	
		4201	Brick/Stone dumpster/Caststone/Scaffolding	INCL	
		4203	Thin brcik units/CMIU//KS brick/demo	INCL	
			Division 4 Total		**$141,875**

5	***Metals***				
		5500	Canopies/Avadek/Installation	$36,185	
		5120	Misc.Metal Fabrication/Bollards	$2,237	
	*	5121	Misc. Steel Items/bolts/Screws/Brackets	$16,500	
	*	5122	Decorative Iron Columns	$11,600	
		5123	Decorative Shutters	$23,600	
			Division 5 Total		**$90,122**
6	***Wood & Plastic***				
		6402	Architectural Woodwork	NICL	
		6100	Interior wall framing/Sht rck/Finishes	$31,044	
	*	6200	Wood framing contingencey	$30,000	
		6210	Misc carpentry labor	INCL	
		6211	Patio Porch Framing framing/Material	$45,735	
			Division 6 Total		**$106,779**
7	***Thermal & Moisture Protection***				
		7600	Wall Dampproofing/Vapor retarder/caulking	NICL	
		7210	Insulation, Batt & Blanket	$1,200	
		7210	Insulation	$15,000	
		7901	Roofing Material & Labor	$42,520	
		7251	Sheetmetal flashings	INCL	
			Division 7 Total		**$58,720**
8	***Doors & Windows***				
		8111	HM Doors & Frames	$2,925	
		8111	PL Doors/Incl Sanctuary entrance doors	$5,400	
		8111	Installation/doors/Windows/ hardware labor	$2,000	
		8305	Specialty Windows glass allowance	$17,855	
	*	8410	Door (x2 sets) Entrance Doors (Winn NIC)	$8,000	
		8411	Aluminum Store front Doors	INCL	
		8710	Hardware Allowance	INCL	
		8711	Aluminum Store front hardware	NICL	
	*	8712	Glass/Glazing/Mirrors	$10,046	
			Division 8 Total		**$46,226**
9	***Finishes***				
		9900	Painting	$12,000	
			Repair exising exterior surfaces	$5,000	
			Division 9 Total		**$17,000**
10	***Specialties***				
		10155	Toilet Accessories/ADA Grab bars	NICL	
		10265	Accessories	NICL	
		10425	Specialties A/V Data Phone	NICL	
		10426	Interior Signage	NICL	
		10800	Fire Ext.'s	NICL	
			Division 10 Total		**$0**

11	***Equipment***					
		11400	Phone/Data/Not included	NICL		
			Division 11 Total			**$0**
12	***Furnishings***					
			Not included			
			Division 12 Total			**$0**
13	***Specialties Service***		Fire Sprinkler system/ Fire SS riser/Equip	NICL		
			Ext fire line/Fire vault/Vault equip	NICL		
14	***Not Used***					**$0**
15	***Mechanical***					
		15010	Plumbing		$66,500	
			Water service line	INCL		
			Sanitary Sewer (Tie into exising)	INCL		
		15011	HVAC		$87,854	
			Division 15 Total			**$154,354**
16	***Electrical***					
		16010	Wire & Conduit/FIxtures		$72.377	
			Fire Alarm System			
			Division 16 Total			**$72,377**
			SUBTOTAL			**$877,419**
			Budget TOTAL COST			**$887,849**

	Cost Not Included Above:		
	Builders Risk Windstorm Insurance	NICL	
	Bldg Permit Cost	NICL	
	Pmt & Perfomance Bond	NICL	
	No exterior signage included	NICL	
	No impact fees, other permit fees, tap fees	NICL	
	Landscaping	NICL	
	Contingency Inclided @wd framing Incl		$30,000
*	We have included $5000 for existing surfaces		$5,000
	*We have not used Winn door Mfg type	NICL	
	No Phone/Audio/Data/ video included	NICL	
	NICL= Not Included in estimate	NICL	
	INCL= Included in estimate	INCL	

AIA® Document G705™ – 2001

List of Subcontractors

PROJECT: *(Name and address)*
La Marque Renaissance District
401 Laurel St. La Marque TX 77568

DATE:
10-17-18

TO ARCHITECT: *(Name and address)*
RPA Archtiects Inc.
3027 Marina Bay Drive, Suite 240
League City, Texas 77573

ARCHITECT'S PROJECT NUMBER:
171108-075

FROM CONTRACTOR: *(Name and address)*
Mike Bricker & Associates, Inc.
PO Box 1467 (2002 Gill Road)
Dickinson, Texas 77539

CONTRACTOR'S PROJECT NUMBER:

(List Subcontractors and others proposed to be employed on the above Project as required by the bidding documents.)

Work/Firm Name	Address/Phone	Superintendent
Aberle Plumbing LLC	13141 Kinsman Rd. Houston, TX 77049 281-458-5911	Steve Aberle
Alex's Air Conditioning	706 Bayou Rd. La Marque, TX 77568 281-337-5634	Troy Crowston
Avadek	12130 Galveston Rd. Bldg 1 Webster, TX 77049 713-944-0988	John Beller
Brickfield Builders	9945 Easthaven Houston, TX 77075 713-946-0683	Chip Hosek
Brinkmann Quality Roofing	15110 Old Galveston Rd. Webster, TX 77598 281-480-7663	Jason Brinkmann
Cherry Demolition	6131 Selinsky Dr. Houston, TX 77048 800-444-1123	Travis Schultz
Crescent Electric	1319 1st St. La Marque, TX 77568 409-935-2416	Gary Saenz Jr.
Pella Windows	1847A West Alabama Houston, TX 77096 832-916-8885	Mark Wagner
Rafael Vega	713-539-9751 (Painter)	Rafael Vega
Solid Concrete	4109 Dixie Farm Road Pearland, TX 77581 281-557-0220	Jimmy Hodges
Texas Premier Drywall Systems	1183 Brittmore Rd., Suite 400 Houston, TX 77043	Jon Hough

AIA Document G705™ – 2001 (formerly G805™ – 2001). Copyright © 2001 by The American Institute of Architects. **All rights reserved.** WARNING: This AIA® Document is protected by U.S. Copyright Law and International Treaties. Unauthorized reproduction or distribution of this AIA® Document, or any portion of it, may result in severe civil and criminal penalties, and will be prosecuted to the maximum extent possible under the law. This document was produced by AIA software at 14:45:41 on 10/17/2018 under Order No. 0650395698 which expires on 07/07/2019, and is not for resale.
User Notes: (3B9ADA2F)

Walls & Windows
281-224-3566
4034 FM 1765
Texas City, TX 77591
409-938-3660
Ted Williams

AIA Document G705™ – 2001 (formerly G805™ – 2001). Copyright © 2001 by The American Institute of Architects. **All rights reserved. WARNING: This AIA® Document is protected by U.S. Copyright Law and International Treaties. Unauthorized reproduction or distribution of this AIA® Document, or any portion of it, may result in severe civil and criminal penalties, and will be prosecuted to the maximum extent possible under the law.** This document was produced by AIA software at 14:45:41 on 10/17/2018 under Order No. 0650395698 which expires on 07/07/2019, and is not for resale.
User Notes: (3B9ADA2F)

LA MARQUE ECONOMIC DEVELOPMENT CORPORATION
REGULAR MEETING JOINTLY WITH LA MARQUE CITY COUNCIL
MINUTES
OCTOBER 18, 2018

AGENDA:

1. CALL TO ORDER
   President Ron Crowder called the meeting to order at 8:02 a.m.

2. ROLL CALL

   PRESENT:
   Ron Crowder, President
   Gene Smith, Secretary
   Deanie Barrett
   Bobby Hocking

   ABSENT:
   Louis "Mac" McGaffey

   OTHER OFFICIALS:
   Councilmember Michetich
   Councilwoman Mc Auliffe

3. APPROVAL OF MINUTES
   a. Regular Meeting of September 20, 2018
   Board member Smith made a motion to approve. Board member Barrett seconded. Motion passed unanimously.

4. FINANCIAL REPORT
   a. Presentation of Monthly Financial Report
   Financial report stood as submitted.

5. PRESENTATION
   a. Lesa Hughes; Chase Bank

   Councilmember Michetich shared his concerns on several recognized, vacant properties (10-13) that are owned by the City, but not contributing to any tax revenue. He suggested that tax incentives or abatements be considered, when developing/building on them to get them back on the tax rolls. He outlined an available grant opportunity program through Chase Bank, then introduced Lesa Hughes, Senior Home Lender Advisor for Chase Bank. Mrs. Hughes outlined eligibility criteria for the Chase Home-buyer Grant (low to moderate) 1) Earn $2,500.00 to be used towards a down payment or closing costs; 2) Receive an additional $500.00 for completing a homebuyer education course; 3) Subject to a credit approval (income/debt ratio)

Further discussion included the introduction of Roger Dickinson of 3-D Home Builders who builds "spec" houses ranging from a minimum of 1200 to 1600 square feet, 3-2, with garages, high quality homes, pricing from $90 to $110, per square foot and includes a ten-year warranty. Houses are built to "fit in" with surrounding houses in their current locations, providing raised foundations due to existing drainage. Regional Manager Robert Alcala was introduced who elaborated on the program and other criteria for the program. Chairman Crowder asked for an informal meeting to be scheduled to discuss this program in more detail.

b. Mark Ciavaglia; Linebarger Goggan Blair & Sampson

Mr. Ciavaglia explained the process of securing foreclosed properties, which is what he specializes in. He helps locate, acquire and get foreclosed and vacant properties back on the tax rolls. He explained the process by which a person can obtain property and the process in which the minimum bids are reduced by fractions of the original cost, after the original sheriff sale.

6. NEW BUSINESS

a. Discussion/possible action regarding the request from Mayor Bobby Hocking (authorized by City Council) to fund an I-45 enhancement study to address corridor branding and intersection improvements

Board member Hocking referred to a previous meeting with TxDOT and the discussion led to the number of entrances there actually are into the City (5); the extent of enhancements and their location (s); possibility of some grant money being available to help offset the price of these enhancements and intersection improvements. There is a commitment from the City to assist financially in this enhancement study which would address the corridor branding and intersection improvements. A letter of intent would be forthcoming within the next week or so.

Board member Smith made a motion to approve the funding ($60,000.00) for an enhancement study to address the corridor branding and intersection improvements. Board member Barrett seconded. Motion passed unanimously.

b. Discussion/possible action regarding hiring an audit firm

After a brief discussion, Board member Hocking made a motion to award the RFQ #18-03 (hiring of an auditing firm) to Belt Harris and Pechacek, LLLP. Chairman Crowder seconded. Motion passed unanimously.

7. OLD BUSINESS

a. Discussion/possible action regarding the renovation of 401 Laurel - Mike Bricker & Associates Inc. as general contractor

Bob Randall provided an update of the preliminary costs ($887,849) involved in the renovation of 401 Laurel in the Renaissance District. After the initial "walk through" several issues surfaced, that couldn't be foreseen initially. The updated cost also included a $30,000.00 contingency for unknown conditions (structural, façade changes to the entrance and other repairs or additions). A time frame as to beginning and finished product, not including time for the two (2) businesses to set up was said to be seven to nine weeks. Board member Hocking made a

motion to accept the new proposal and move forward with the renovations. Board member Barrett seconded. Motion passed unanimously.

8. DISCUSSION

a. Director's Report - report may include past, present, or future projects

Executive Director had one addition to his report that there were reservations from a prospective lessee at the Highway 3 location, due to the type of business that maybe moving in adjacent to the property.

b. Public Relations Report – report to include an overview of efforts as it pertains public relations

Public Relations Specialist provided her report and reminded all of the Fall Cleanup Event November 3rd; Bayou Fest and Christmas Parade

9. EXECUTIVE SESSION

a. Section 551.072 of the Government Code - deliberations about real property - land acquisition and or sale

There was no Executive Session

10. ACTION TO BE TAKEN FROM EXECUTIVE SESSION

a. Consider land acquisition and or sale

11. REQUESTS, ANNOUNCEMENTS AND COMMENTS - None

12. ADJOURNMENT

It was the consensus of the Board to adjourn at 9:55 a.m.

_____

Ron Crowder, President

_____

Robin Eldridge, TMRC
City Clerk

CITY COUNCIL AGENDA FORM

Meeting Date:	November 12, 2018	Agenda item:	**7&8a**
Prepared by:	Sussie Sutton	Reviewed by:	*Charlene Warren*
Department:	Development Services		

AGENDA ITEM DESCRIPTION: Discussion/possible action regarding adopting Ordinance No. **O-2018-0013** approving a re-zone from R-1 Single Family Residential to C-1 General Commercial, being a tract or parcel of land containing 1.3684 acres of land or 59,606 square feet, located in the S.F. Austin League, Abstract 2, Galveston County, Texas; Said 1.3684 acre tract being all of Tracts 1 and 2 of record in the name of La Marque Investment Group, Inc. in Galveston County Clerk File (G.C.C.F.) Number 9103747 and being all of that tract of land of record in the name of Hazel Benton of record in G.C.C.F. Number 8723178, Said 1.3684 acre tract being more particularly described as bearings based as on said G.C.C.F. No. 9103747. (3197 Main and lot on Duroux and contiguous to 3197 Main) *THIS IS THE SECOND AND FINAL READING*

X

ATTACHMENTS FOR REFERENCE

1. Ordinance/Metes & Bounds
2. Site Plan
3. Zoning Map
4. City Planning Letter
5. Application
6. Draft minutes - City Council meeting of September 10, 2018

STAFF BRIEFING:

- KSOLV/Garner Environmental Services is a full service company offering environmental emergency response for oil spills and hazardous materials. They have been located at 3197 FM 519 since 1981 and have 220 employees within its two business locations.
- This re-zone request also includes the property purchased from the residential owners of 2315 Duroux which is contiguous and behind the current building.
- Their plans are to construct a concrete parking lot with wood fencing to secure their employees and company vehicles.
- Public Hearing held at the Planning & Zoning Commission regular meeting of August 14, 2018. There was no citizen opposition at the public meeting and no calls or mail were received by staff with negative comments concerning this re-zone.
- Planning & Zoning Commission discussed at the meeting of August 14, 2018. There was a concern that this request was spot zoning and perhaps all four corners should be considered to be re-zoned to commercial in the future, and decided to recommend to City Council to deny this request.
- After further discussion and after the P&Z meeting and recommendation for denial, it was found instead NOT to be spot zoning

- At the Council meeting held on September 10, 2018, City Council voted in *FAVOR* of the rezone.

HISTORY:

- **March 3, 2018**: Mr. Todd Riddle met with City staff to discuss the possibility of purchasing a property contiguous to 3197 Main so the company could park vehicles and secure employee cars while out in the field.
- **March 3, 2018**: It was determined that both properties would have to re-platted into one lot after the second lot was acquired.
- **July 19, 2018**: Staff received a zoning application and a re-plat application for KSOLV to join the two properties.
- **July 30, 2018**: Re-zone notification sent for legal newspaper notice and notification letters mailed to all property owners within 200 feet.

TARGET IMPLEMENTATION: After the second reading and adoption of the Ordinance in favor of the Re-zone (and according the City Charter)

SIGNIFICANT ACTION DATES:
August 14, 2018: – Planning & Zoning Commission considered the re-zone and recommended to deny the request and send this recommendation to City Council.
September 10, 2018 – City Council voted in *FAVOR* of the Re-zone
October 8, 2018 – City Council approved on the First Reading the Re-Zone Ordinance

---

ACTION:

☒ Ordinance ☐ Resolution
☐ Special Presentation ☐ Proclamation
☐ Finance Report ☐ Public Hearing
☐ Other – Re-zone Request
☒ Mark if this item does not conflict with any Resolution, Ordinance or City Charter, policies, procedures

Cost Details:	
Budgeted	
Actual Bid	
Estimated Expenditure	
Acct. Name(s)	
Line Items #	
Other Funding	

STAFF'S RECOMMENDATION: Motion to adopt Ordinance No. **O-2018-0013** approving a re-zone from R-1 Single Family Residential to C-1 General Commercial, being a tract or parcel of land containing 1.3684 acres of land or 59,606 square feet, located in the S.F. Austin League, Abstract 2, Galveston County, Texas; Said 1.3684 acre tract being all of Tracts 1 and 2 of record in the name of La Marque Investment Group, Inc. in Galveston County Clerk File (G.C.C.F.) Number 9103747 and being all of that tract of land of record in the name of Hazel Benton of record

in G.C.C.F. Number 8723178, Said 1.3684 acre tract being more particularly described as bearings based as on said G.C.C.F. No. 9103747. (3197 Main and lot on Duroux and contiguous to 3197 Main) *THIS IS THE SECIND AND FINAL READING*

FISCAL IMPACT: Garner Environmental Services is a primary job generator who employs 220 people between their companies. The employees who live in and drive to La Marque also shop and patronize the restaurants and businesses in La Marque. While this does not directly impact the city's budget, it is a healthy impact to the businesses of La Marque who in turn pay into the City's sales tax.

ORDINANCE NO. O-2018-0013

AN ORDINANCE OF THE CITY COUNCIL OF THE CITY OF LA MARQUE, TEXAS, CHANGING THE ZONING CLASSIFICATION FROM R-1 SINGLE FAMILY RESIDENTIAL TO C-1 COMMERCIAL, BEING A TRACT OR PARCEL OF LAND CONTAINING 1.3684 ACRES OF LAND OR 59,606 SQUARE FEET, LOCATED IN THE S. F. AUSTIN LEAGUE, ABSTRACT 2, GALVESTON COUNTY, TEXAS Said 1.3684 ACRE TRACT BEING ALL OF TRACTS 1 AND 2 OF RECORD OF GARNER ENVIRONENTAL SERVICES INC. AND BEING ALL OF THAT TRACT OFLAND OF RECORD IN THENAMER OF OMI GARNER PROPERTIES LLC. FRONTING THE INTERSECTION OF MAIN STREET AND DOUROUX ROAD IN THE CITY OF LA MARQUE; AMENDING THE ZONING MAP OF THE CITY ADOPTED THE 12TH DAY OF DECEMBER 2005 BY ORDINANCE NUMBER 953

WHEREAS, Garner Environmental Services, Inc. & OMI Garner Properties LLC (the "Applicant"), owners of the property 3197 Main Street described as Tracts 1 and 2 rezone request generally described as fronting the intersection of Main and Durum Road (the "Property"), generally situated in the corporate city limits of the City of La Marque, Texas (the "City"), and being more particularly described as a tract or parcel of land containing 1.3684 acres of land or 59,606 square feet as shown in Exhibit "A" attached hereto and made a part hereof for all purposes; and

WHEREAS, the Property described as a tract or parcel of land containing 1.3684 acres of land or 59,606 square feet as shown in Exhibit "A" attached hereto and made a part hereof for all purposes presently has a zoning classification of Single Family Residential under Chapter 71: Zoning of the Code of Ordinances of the City of La Marque; and

WHEREAS, the applicant has made application to the City to change such zoning classification of said property from Single Family Residential to C-1 Commercial as authorized by the City's Zoning of the Code of Ordinances of the City of La Marque,; and

WHEREAS, the Planning and Zoning Commission of the City of La Marque City Council of the City has conducted, in time and manner and after the notice required by law and Chapter 71: Zoning of the Code of Ordinances of the City of La Marque, a public hearing on such request in classification; and

WHEREAS, the City Council has conducted, in time and manner and after the notice required by law and Chapter 71; Zoning of the Code of ordinances, of the City of La Marque, a public hearing on such request of change in classification; and

WHEREAS, the City Council now deems it appropriate to grant such requested change in classification;

NOW THEREFORE, BE IT ORDAINED BY THE CITY COUNCIL OF THE CITY OF LA MARQUE, TEXAS THAT:

Section 1. The facts and the matters set forth in the preamble on this Ordinance are hereby found to be true and correct.

Section 2. The zoning classification of a tract or parcel of land containing 1.3684 acres of land or 59,606 square feet as shown in Exhibit "A", attached hereto and made a part hereof for all purposes, fronting Main Street and Duroux Road in the City of La Marque, is hereby changed from Single Family Residential to Commercial as authorized by the Chapter 71: Zoning of the Code of Ordinances of the City of La Marque.

Section 3. The zoning map of the City, adopted on the 12th day of December, 2005 by ordinance number 953, shall be revised and amended to show the zoning reclassification of said tract of land as provided in section 2 hereof, with the appropriate reference to the number and effective date of this Ordinance and brief description of the nature of the change.

Section 4. This Ordinance shall in no manner amend, change, supplement, or revise any provision of any ordinance of the City, save and except the change in zoning classification of the tract described in section 2 hereof.

Section 5. In the event any clause, phrase, provision, sentence or part of this Ordinance or the application of the same to any person or circumstances shall for any reason be adjudged invalid or held unconstitutional by a count of competent jurisdiction, it shall not affect, impair, or invalidate this Ordinance as a whole or any part or the provision hereof other than the part declared to be invalid or unconstitutional; and the City council of the City of La Marque, Texas, declares that it would have passed each and every part of the same notwithstanding the omission of any such part thus declared to be invalid or unconstitutional, whether there be one or more parts.

PASSED AND APPROVED by the City Council of the City of La Marque, Texas, on the First reading this the **8th** day of **October**, 2018.

PASSED, APPROVED AND ADOPTED by the City Council of the City of La Marque, Texas, on the Second and Final reading this the _____ **day** of _____, 2018.

CITY OF LA MARQUE, TEXAS

_____

Bobby Hocking, Mayor

ATTEST:

_____
Robin Eldridge, TRMC
City Clerk

APPROVED AS TO FORM:

_____
Ellis J. Ortego
City Attorney

METES AND BOUNDS DESCRIPTION
1.3684 ACRES
LOCATED IN THE
S.F. AUSTIN LEAGUE, A-2,
GALVESTON COUNTY, TEXAS

Being a tract or parcel of land containing 1.3684 acres of land or 59,606 square feet, located in the S.F. Austin League, Abstract 2, Galveston County, Texas; Said 1.3684 acre tract being all of Tracts 1 and 2 of record in the name of Garner Environmental Services, Inc., a Texas corporation in Galveston County Clerk File (G.C.C.F.) Number 2018013844 and being all of that tract of land of record in the name of Omi Garner Properties LLC, a Texas limited liability company of record in G.C.C.F. Number 2018028504; Said 1.3684 acre tract being more particularly described as follows (bearings based on said G.C.C.F. No. 2018013844):

BEGINNING at a 1inch iron pipe found for the southwest corner of both the herein described tract and aforesaid Hazel Benton Tract and being on the east Right-of-Way (R.O.W.) line of Duroux Road (60 feet wide);

THENCE, coincident the west line of aforesaid Hazel Benton Tract and Tracts 1 and 2, respectively, and the east R.O.W. line of aforesaid Duroux Road, North 00 degrees 43 minute 00 seconds West, a distance of 335.00 feet to a 5/8 inch iron rod with "Gruller" cap set for the northwest corner of both the herein described tract and aforesaid Tract 1 and being at the southeast intersection of the east R.O.W. line of said Duroux Road and the south R.O.W. line of F.M. 519 (width varies);

THENCE, coincident the north line of aforesaid Tract 1 and the south R.O.W. line of aforesaid F.M. 519, North 89 degrees 17 minutes 00 seconds East, a distance of 133.75 feet to a 5/8 inch iron rod with "Gruller" cap set for the most northerly northeast corner of the herein described tract and being the northwest corner of that certain tract of land of record in the name of Guillermo, Lesly and Lester Alvarado in G.C.C.F. Number 2015018027;

THENCE, coincident the east line of aforesaid Tract 1 and the west line of the aforesaid Alvarado tract, South 00 degrees 43 minutes 00 seconds East, a distance of 150.00 feet to a 5/8 inch iron rod with "Gruller" cap set for the southeast corner of said Tract 1 and being the southwest corner of said Alvarado tract;

THENCE, coincident the north line of aforesaid Tract 2 and the south line of aforesaid Alvarado tract, North 89 degrees 17 minutes 00 seconds East, a distance of 80.00 feet to a 5/8 inch iron rod with "Gruller" cap set for the northeast corner of said Tract 2;

THENCE, coincident the east line of aforesaid Hazel Benton Tract and Tract 2, respectively, South 00 degrees 43 minutes 00 seconds East, a distance of 185.00 feet to a 5/8 inch iron rod with "Gruller" cap set for the southeast corner of both the herein described tract and said Hazel Benton tract;

THENCE, coincident the south line of the herein described tract, South 89 degrees 17 minutes 00 seconds West, a distance of 213.75 feet to the **POINT OF BEGINNING** and containing 1.3684 acre of land.

Gruller Surveying, LLC 45-1826.doc July 19, 2018

#1

METES AND BOUNDS DESCRIPTION
1.3684 ACRES
LOCATED IN THE
S.F. AUSTIN LEAGUE, A-2,
GALVESTON COUNTY, TEXAS

Being a tract or parcel of land containing 1.3684 acres of land or 59,606 square feet, located in the S.F. Austin League, Abstract 2, Galveston County, Texas; said 1.3684 acre tract being all of Tracts 1 and 2 of record in the name of Garner Environmental Services, Inc., in Galveston County Clerk File (G.C.C.F.) Number 2018013844 and being all of that tract of land of record in the name of GM Garner Properties LLC of record in G.C.C.F. Number 2018028504; said 1.3684 acre tract being more particularly described as follows (bearings based on deed of record in G.C.C.F. No. 9103747):

BEGINNING at a 1-inch iron pipe found for the southeast corner of both the herein described tract and aforesaid GM Garner Properties, LLC tract and being on the east Right-of-Way (R.O.W.) line of Dunton Road (80 feet wide);

THENCE, coincident the west line of aforesaid the GM Garner Properties, LLC tract and Tracts 1 and 2, respectively, and the east R.O.W. line of aforesaid Dunton Road, North 00 degrees 43 minute 00 seconds West, a distance of 333.00 feet to a 5/8 inch iron rod with "Gruller" cap set for the northwest corner of both the herein described tract and aforesaid Tract 1 and being at the southeast intersection of the east R.O.W. line of said Dunton Road and the south R.O.W. line of F.M. 519 (width varies);

THENCE, coincident the north line of aforesaid Tract 1 and the south R.O.W. line of aforesaid F.M. 519, North 89 degrees 17 minutes 00 seconds East, a distance of 133.75 feet to a 5/8 inch iron rod with "Gruller" cap set for the most northerly northwest corner of the herein described tract and being the northeast corner of that certain tract of land of record in the name of Guillermo, Lesly and Lester Alvarado in G.C.C.F. Number 2015018027;

THENCE, coincident the west line of aforesaid Tract 1 and the west line of the aforesaid Alvarado tract, South 00 degrees 43 minutes 00 seconds East, a distance of 150.00 feet to a 5/8 inch iron rod with "Gruller" cap set for the southwest corner of said Tract 1 and being the southwest corner of said Alvarado tract;

THENCE, coincident the north line of aforesaid Tract 2 and the south line of aforesaid Alvarado tract, North 89 degrees 17 minutes 00 seconds East, a distance of 80.00 feet to a 5/8 inch iron rod with "Gruller" cap set for the northeast corner of said Tract 2;

THENCE, coincident the east line of aforesaid GM Garner Properties, LLC tract and Tract 2, respectively, South 00 degrees 43 minutes 00 seconds East, a distance of 183.00 feet to a 5/8 inch iron rod with "Gruller" cap set for the southeast corner of the herein described tract;

THENCE, coincident the south line of the herein described tract, South 89 degrees 17 minutes 00 seconds West, a distance of 213.75 feet to the Point OF BEGINNING and containing 1.3684 acre of land.

NOTES:

1. The surveyor has not abstracted the subject property.
2. This survey was created with the benefit of a title commitment prepared by Alamo Title Company under G.F. No. ABON18078202, dated January 30, 2018.
3. Basis of Bearings for the survey is the deed of record in G.C.C.F. Number 9103747.
4. By graphic plotting only, the subject property lies within Zone "X", areas determined to be between limits of the 100-year flood and 500-year flood; or certain areas subject to 100-year flooding with average depths less than one (1) foot or where the contributing drainage area is less than one square mile; or areas protected by levees from the base flood, as defined by the Federal Emergency Management Agency flood insurance rate map number 48167C0070D, dated 02-16-1983.
5. Subject to undocketed pipeline easements of record in Vol. 298, Pg. 449 & Vol. 768, Pg. 578, G.C.C.R.

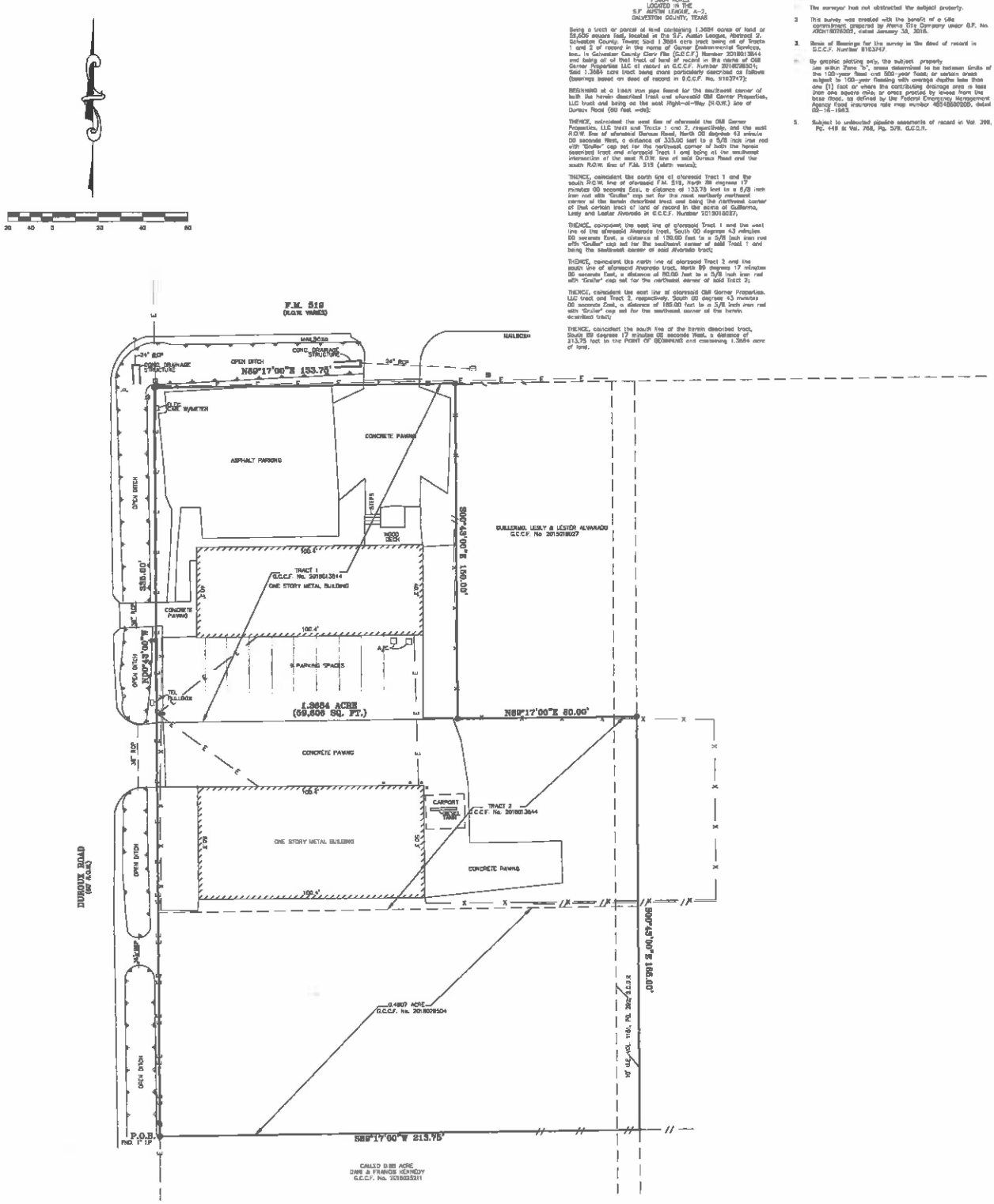

LEGEND

- IRON ROD SET/FND
- POWER POLE
- GUY ANCHOR
- MANHOLE
- MONITORING WELL
- CLEANOUT
- GATE VALVE @ BOX
- FIRE HYDRANT
- WATER METER
- TELEPHONE PEDESTAL
- CABLE EQUIPMENT
- LIGHT STANDARD
- LIGHT
- TRAFFIC SIGN
- TREE
- PIPE BOLLARD
- F.O.C. FIBER OPTIC CABLE
- M.H. MANHOLE
- I.C.V. IRRIGATION CONTROL VALVE
- CURB LINE
- CURB INLET
- AREA INLET
- EDGE OF BUILDING
- 43.67 TOP OF CURB ELEVATION
- x5.17 GUTTER ELEVATION

WOOD FENCE
CHAIN LINK FENCE
WROUGHT IRON FENCE
OVERHEAD ELECTRIC
WATERLINE
GAS LINE
TELEPHONE LINE
CENTER OF CABLE
TOP OF BANK

+45.6 EXIST. NATURAL GROUND ELEVATION
+45.67 EXIST. ASPHALT OR CONCRETE ELEVATION

To: Garner Environmental Services, Inc., Lakeprop Investment Group, Inc. & Alamo Title Company:

This survey complies with the current Texas Society of Professional Surveyors Standards and Specifications for a Category 1A, Condition II Survey.
I do hereby certify that this survey was this day made on the ground. This plat correctly represents the facts found at the time of the survey.

Kenneth A. Gruller
Texas Registered Professional Land Surveyor No. 5478

STATE OF TEXAS
KENNETH A. GRULLER
5478
REGISTERED PROFESSIONAL LAND SURVEYOR

PLAT OF SURVEY
BOUNDARY AND IMPROVEMENT OF A 1.3684 ACRE TRACT G.C.C.F. No. 2018013844 & 2018028504 LOCATED IN THE S.F. AUSTIN LEAGUE, A-2 GALVESTON COUNTY, TEXAS

Gruller Surveying, LLC

PROFESSIONAL LAND SURVEYING
5000 SAN FELIPE, STE. 1400
HOUSTON, TEXAS 77056

SCALE: 1"= 20'	FIELD BOOK: 2018-LC	DATE: 07-11-2018
G.F. No. ABON18078202	ADDRESS: 3197 MAIN STREET, LA MARQUE, TX	
PHONE: (713) 372-1466	DWG. NO. 48-1686	

as of 11-28-2016

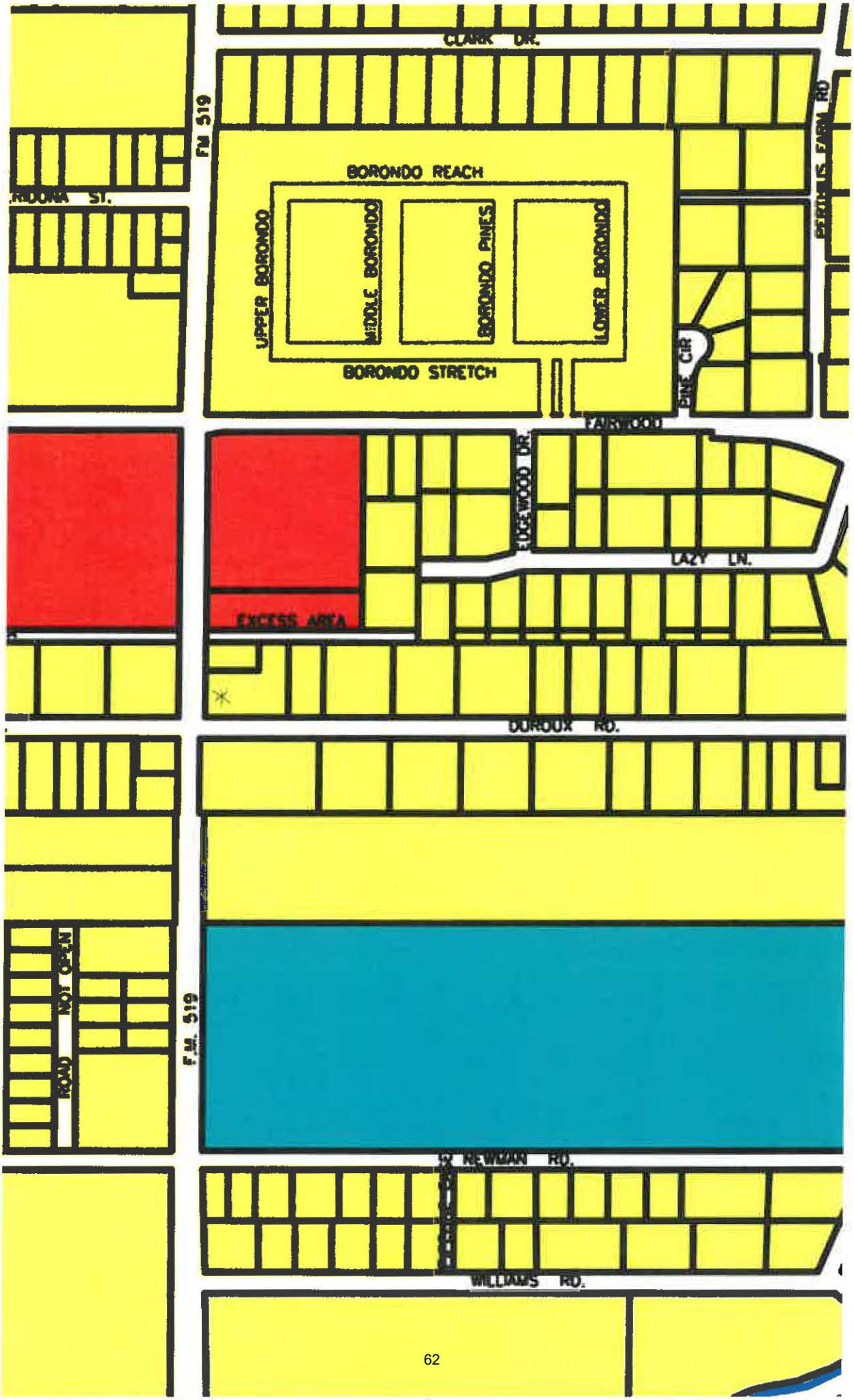

* 3195 Main

Integrity Title Company, LLC

CITY PLANNING LETTER

July 25, 2018 Job No. 1829215A
Effective Date: June 8, 2018 Ref: 132425 & 132424

STATE OF TEXAS:
COUNTY OF GALVESTON:

THIS IS TO CERTIFY: That after a careful examination of the records in the offices of the Clerk of this County (excluding U. C. C. Records), as to the property described as follows:

Being a tract or parcel of land containing 1.3684 acres of land or 59,606 square feet, located in the S.F. Austin League, Abstract 2, Galveston County, Texas; Said 1.3684 acre tract being all of Tracts 1 and 2 of record in the name of Garner Environmental Services, Inc., a Texas corporation in Galveston County Clerk File (G.C.C.F.) Number 2018013844 and being all of that tract of land of record in the name of Omi Garner Properties LLC, a Texas limited liability company of record in G.C.C.F. Number 2018028504; Said 1.3684 acre tract being more particularly described as follows (bearings based on said G.C.C.F. No. 2018013844):

BEGINNING at a 1inch iron pipe found for the southwest corner of both the herein described tract and aforesaid Hazel Benton Tract and being on the east Right-of-Way (R.O.W.) line of Duroux Road (60 feet wide);

THENCE, coincident the west line of aforesaid Hazel Benton Tract and Tracts 1 and 2, respectively, and the east R.O.W. line of aforesaid Duroux Road, North 00 degrees 43 minute 00 seconds West, a distance of 335.00 feet to a 5/8 inch iron rod with "Gruller" cap set for the northwest corner of both the herein described tract and aforesaid Tract 1 and being at the southeast intersection of the east R.O.W. line of said Duroux Road and the south R.O.W. line of F.M. 519 (width varies);

THENCE, coincident the north line of aforesaid Tract 1 and the south R.O.W. line of aforesaid F.M. 519, North 89 degrees 17 minutes 00 seconds East, a distance of 133.75 feet to a 5/8 inch iron rod with "Gruller" cap set for the most northerly northeast corner of the herein described tract and being the northwest corner of that certain tract of land of record in the name of Guillermo, Lesly and Lester Alvarado in G.C.C.F. Number 2015018027;

THENCE, coincident the east line of aforesaid Tract 1 and the west line of the aforesaid Alvarado tract, South 00 degrees 43 minutes 00 seconds East, a distance of 150.00 feet to a 5/8 inch iron rod with "Gruller" cap set for the southeast corner of said Tract 1 and being the southwest corner of said Alvarado tract;

THENCE, coincident the north line of aforesaid Tract 2 and the south line of aforesaid Alvarado tract, North 89 degrees 17 minutes 00 seconds East, a distance of 80.00 feet to a 5/8 inch iron rod with "Gruller" cap set for the northeast corner of said Tract 2;

THENCE, coincident the east line of aforesaid Hazel Benton Tract and Tract 2, respectively, South 00 degrees 43 minutes 00 seconds East, a distance of 185.00 feet to a 5/8 inch iron rod with "Gruller" cap set for the southeast corner of both the herein described tract and said Hazel Benton tract;

THENCE, coincident the south line of the herein described tract, South 89 degrees 17 minutes 00 seconds West, a distance of 213.75 feet to the **POINT OF BEGINNING** and containing 1.3684 acre of land.

We find the record title to be apparently in:

GARNER ENVIRONMENTAL SERVICES, INC & OMI GARNER PROPERTIES LLC

By virtue of that certain Warranty Deed dated March 2, 2018 from Lamarque Investment Group, Inc and recorded under Galveston County Clerk's File Number 2018013844.

By virtue of that certain Warranty Deed dated May 1, 2018 from Sylvestor C. Benton and Hazel J. Benton and recorded under Galveston County Clerk's File Number 2018028504.

Subject to the following liens:

None found of record.

Subject to the following easements and encumbrances:

Houston Pipe Line Co. Easement dated May 13, 1927 and recorded under Volume 399, Page 449 of the Galveston County Deed Records.

Pan American Gas Company Easement dated July 21, 1947 and recorded under Volume 769, Page 579 of the Galveston County Deed Records.

10' Utility Easement dated May 3, 1956 and recorded under Volume 1151, Page 292 of the Galveston County Deed Records.

Subject to the following restrictions:

None found of record.

We have made no examination as to special assessments or conflicts.

INTEGRITY TITLE COMPANY LLC

Chris Layne
Abstractor

LIMITATION OF LIABILITY: THE LIABILITY OF EITHER PARTY WITH RESPECT TO THIS INFORMATION OR ANY ACT IN CONNECTION HEREWITH WHETHER IN CONTRACT, TORT, OR OTHERWISE, SHALL NOT EXCEED THE PRICE OF THE SERVICES OR PRODUCTS SOLD HEREUNDER OR THE PRICE OF THAT PORTION OF SUCH SERVICES OR PRODUCTS ON WHICH LIABILITY IS ASSERTED. COURTHOUSE SPECIALISTS (SELLER) MAKES NO WARRANTY WHATSOEVER, EXPRESS, IMPLIED OR STATUTORY, AS TO THE QUALITY, FITNESS, SUITABILITY, CONFORMITY, OR MERCHANTABILITY OF THE SERVICES OR PRODUCTS SOLD. IF THE TRANSACTION IN QUESTION IS ARISING FROM OR RELATED TO AN AUCTION OR FORECLOSURE, INCLUDING WITHOUT LIMITATION A TAX AUCTION, HOA AUCTION OR SIMILAR AUCTION PROCEEDING, THE BUYER TAKES THE PROPERTY SUBJECT TO ALL LIENS, ENCUMBRANCES AND OTHER MATTERS OF RECORD WHETHER OR NOT REFLECTED ON THE CERTIFICATE.

LA MARQUE DEPARTMENT OF BUILDING AND INSPECTIONS

1111 Bayou Road
La Marque, Texas 77568
0. 409.938.9204
F. 409.908.0549

CITY OF LAMARQUE
PLANNING AND ZONING APPLICATION

DATE OF APPLICATION 7/19/18

NAME OF AGENT Todd Riddle PHONE (713) 468-5768

ADDRESS 9660 Katy Freeway Houston, TX 77055

NAME OF OWNER Garner OMI Properties PHONE (713) 468-5768

ADDRESS 9660 Katy Freeway Houston, TX 77055

PROPERTY DESCRIPTION:

ADDRESS: 3197 Main St. Lamarque, TX 77568

PLOT OF AREA ATTACHED METES AND BOUNDS ATTACHED

PRESENT ZONE Residential

REASON FOR CHANGE: To be incorporated into the primary Garner business property at 3197 Main St. which is commercial. We plan to fence the property and install impervious rock material for parking of Garner vehicles & equipment.

DESIRED OUTCOME:

To be approved and zone the property commercial and approve parking area plans to incorporate into the primary existing commercial property.

APPLICATION CHECKLIST

[ ] **CERTIFIED PROPERTY OWNERS WITHIN 200-FEET OF THE PROPERTY-** LISTS PRINTED MORE THAN TWO WEEKS PRIOR TO APPLICATION SUBMITTAL MAY NOT BE ACCEPTED

(CENTRAL APPRAISAL DISTRICT (CAD)- (CENTRAL APPRAISAL DISTRICT (CAD-
9850 Emmett Lowry Expressway Ste. A Texas City, TX 77591 409/935-1980)
409/935-1980)
[✓] **SITE PLAN (TO SCALE)** WITH EXISTING IMPROVEMENTS, DEVELOPMENTS, AND PROPERTY LINES [8-1/2X1 1] IF LARGER THAN 8-1/2X1 1, PLEASE FOLD TO APPROPRIATE SIZE)
[✓] **SURVEY** (TO SCALE) (2 COPIES)
[✓] **CURRENT TAX** RECEIPTS-COUNTY TAX OFFICE, 722 MOODY (766-2481
[✓] **TITLE REPORT** (IF LAND WAS PURCHASED WITHIN THE LAST 60 DAYS)
[✓] **NON-REFUNDABLE APPLICATION FEE** (PAYABLE TO THE CITY OF LA MARQUE

SUBMITTED TO BOARD
DATE:_____

APPROVED_____ DENIED_____ OTHER_____

COMMENTS_____

APPLICANT'S CERTIFICATE

I AFFIRM THAT MY STATEMENT CONTAINED IN THE APPLICATION ARE TRUE AND CORRECT TO THE BEST OF MY KNOWLEDGE.

SIGNED Tad Riddle DATE: 7/19/18

1111 Bayou
La Marque, Texas 77568
409.938.9202

CITY OF LA MARQUE
CITY COUNCIL
REGULAR MEETING MINUTES
OF
September 10, 2018

Regular City Council Meeting Minutes of the City of La Marque City Council held on Monday, September 10, 2018, beginning at 6:00 p.m. at 1109-B Bayou Road with the following members present:

(1) CALL TO ORDER

Mayor Hocking called the Regular Meeting to order at 6:00 p.m.

(2) ROLL CALL

Bobby Hocking	Mayor
Keith Bell	Mayor Pro-Tem, Councilmember District A
Chris Lane	Councilmember, District B
Robert Michetich	Councilmember, District C
Casey Mc Auliffe	Councilwoman, District D

OTHER OFFICIALS PRESENT:

Charlene Warren	Interim City Manager
Robin Eldridge	City Clerk
Ellis Ortego	City Attorney

(3) INVOCATION AND PLEDGE OF ALLEGIANCE- Mayor Pro-Tem Bell led the invocation and the Pledge of Allegiance was led by Mayor Hocking

(4) PRESENTATIONS/ PROCLAMATIONS

a. Art Presentation- Paul Bernard

Mayor Hocking introduced Paul Bernard, an employee in the Public Services Department for the City of La Marque who presented a painted Muriel of the City including co-workers and officials. Mr. Bernard has been painting since he was eight years old. He thanked Chaise Carey, his supervisor, and said he would like to show his appreciation to the Mayor and other officials for their leadership. He said that he is going to show his work later this month in the Art Walk in Texas City.

b. Proclamation- "Constitution Week" – Mayor Hocking presented Catherine Polk and Cheryl Tucker with a proclamation in support of Constitution Week, which is September 17, 2018 through September 23, 2018.

Before the following, Mayor Hocking introduced Charlene Warren as the Interim City Manager

1111 Bayou
La Marque, Texas 77568
409.938.9202

(5) CITIZENS PARTICIPATION

1. Clarence Caldwell reported an accident involving four-wheelers recently, and something needed to be done about the four-wheelers. He reported that the gentlemen that were sent out to change out his water meter, didn't have the correct tools to the job, and there was no supervisor on hand; and another issue he reported was a raw sewer leak in the ditch, the lift station was backed and over-flowing. He wasn't happy about the response he received from one of the workers, when he addressed him about this issue, and also the lack of personnel when staff is on vacation to address his issues.

2. Bo Hunter reported that he had been a resident of the City for fifty-one years. "I am here as a citizen and under the present Police administration, we have had three discrimination complaints and one discrimination suit filed by four employees of the Police Department." He further said that at the time, there were only three black officers working for the City. "Something needs to be done folks." He further compared himself to the Mayor as to who would make it home safely each day, "Not because of a DWI, but because of DWB. That's the difference between my world and his world, and I would like for all of us to live in the same world and be treated right. If the people that work in the police department are not being treated fairly, by the people that they work for, what do you think that will happen to me if I get stopped, what kind of chance to I have as a normal citizen?" He wanted to see an outside investigation done to see why these things are taking place.

3. Moses A. Wilmore handed out pictures for Council to observe that show a picture of a warehouse and reported that there is drug activity at that location. Reported other areas that also include drug activity. "We notified the Police Department six times, concerning that particular matter, and the problem has not been solved, and it has been going on for the past three years. The raids have not solved the problems, these people go back to doing what they are doing. The warehouse is an embarrassment to the City. The projection of La Marque is always centered around drugs, so we have to have visible Police presence in the neighborhood. This is not ostersizing the present Police Chief, but Under Chief Aragon, he carried on a "zero tolerance" for drugs for two or three months, and it cleaned up the streets. He kept it that way for two or three years."

   Mayor Pro-Tem said as a point of information, "We have understood for a long time that one of the challenges we have here is the narcotics trade. I just wanted to let you know and let the citizens know that we have increased our capacity to address those narcotics issues 100%. So, while there was certainly staff members that were dedicated to that, we have doubled that, I am not going to say how many, I don't want to reveal what Chief Jackson is or is not doing, but I need to let us know that we understand that there is an issue and this Council has in a 100% percent way

1111 Bayou
La Marque, Texas 77568
409.938.9202

doubled our ability to address the drug and narcotic activity in our City; you can find that in the budget."

The pictures were going to be referred to the Code Compliance Supervisor and to the Police Chief.

4. Todd Riddle on behalf of Garner Environmental, "Garner is a local business here, and has been operating out of its facility since about 1990. We are an environmental services company, serving the Gulf Coast region." He then introduced Shanna Wade and Curtis Galloway, two other representatives of Garner that were present. Garner, recently acquired a company out of Louisiana, OMI, an environmental services company also, for oil spill cleanups. OMI company brings over about one hundred and seventy five employees and Garner employees about sixty-five employees, occupying several locations, with one being in La Marque. "We had sought permission and approval from City Council to re-plat and rezone a tract on Main Street to construct a parking lot with a privacy fence."

(6) CONSENT AGENDA

a. La Marque Employee Benefits Trust Minutes 7.23.2018
b. Special Called City Council Meeting Minutes 8.6.2018
c. Regular City Council Meeting Minutes 8.13.2018
d. Special Called City Council Meeting Minutes 8.16.2018
e. Special Called City Council Meeting Minutes 8.28.2018
f. Discussion/possible action regarding adopting Resolution No. **R-2018-0021**, the Investment Policy

** Councilwoman Mc Auliffe made a motion to approve the Consent Agenda
** Councilmember Lane seconded. **MOTION CARRIED UNANIMOUSLY**

(7) PUBLIC HEARING

a. Conduct **SECOND** Public Hearing (as per City Charter) to hear public input regarding FY (2018-2019) Proposed Budget for the City of La Marque.

Mayor Hocking closed the Regular meeting and opened the Public Hearing at 6:30 p.m.

Geraldine Sam spoke. She wanted to make sure that the employees were getting some type of compensation to offset the economy going up. She then asked in light of the Renaissance District, will eminent domain be in effect. "Will the City have to pay certain property owners in that area?" She then stated that the City had not had a tax increase in La Marque in a long time, and asked if the taxes were going to increase.

1111 Bayou
La Marque, Texas 77568
409.938.9202

Mayor provided point of information and said that yes there were some enumeration for employees and that eminent domain has not been discussed as of yet and that there would be no increase in taxes.

Clarence Caldwell began to speak of another subject and was asked to return at a later date for the issues he was bringing forward, since this was a public hearing for the proposed budget.

Mayor Hocking closed the Public Hearing and reconvened the Regular meeting at 6:34 p.m.

(8) NEW BUSINESS

a. Discussion/possible action regarding adopting Ordinance No. **O-2018-0010** making appropriations for the support of the City of La Marque for the fiscal year beginning October 1, 2018 and ending September 30, 2019 appropriating money to a sinking fund to pay interest and principal due on the City's indebtedness; and adopting the annual budget for the City of La Marque for 2018-2019 fiscal year. *THIS IS THE FIRST READING*

** Councilmember Michetich made a motion to adopt Ordinance No. 2018-0010.

** Councilwoman Mc Auliffe seconded. **MOTION CARRIED UNANIMOUSLY**.

b. **Discussion**/possible action regarding adopting Ordinance No. **O-2018-0012**, amending Chapter 62, Section 62-84, Traffic and Vehicles, of the City of La Marque Code of Ordinances, Farm Road Highway 1764 to alter certain speed limits and amending Section 62-85, by deleting Subsection (c), which established a school zone on Farm Road Highway 1765. *THIS IS THE FIRST READING*

** Councilmember Lane made a motion to adopt Ordinance No. O-2018-0012.
** Councilmember Michetich seconded.

** Councilwoman Mc Auliffe asked for clarification of the changes to the speed limits to which Chief Jackson explained. **MOTION CARRIED UNANIMOUSLY.**

c. Discussion/possible action regarding the Planning & Zoning recommendation for denial of a re-zone from R-1 Single Family Residential to C-1 General Commercial, being a tract or parcel of land containing 1.3684 acres of land or 59,606 square feet, located in the S.F. Austin League, Abstract 2, Galveston County, Texas; Said 1.3684 acre tract being all of Tracts 1 and 2 of record in the name of La Marque Investment Group, Inc. in Galveston County Clerk File (G.C.C.F.) Number 9103747 and being all of that tract of land of record in the name of Hazel Benton of record in G.C.C.F. Number 8723178, Said 1.3684 acre tract being more particularly

1111 Bayou
La Marque, Texas 77568
409.938.9202

described as bearings based as on said G.C.C.F. No. 9103747. (3197 Main and lot on Duroux and contiguous to 3197 Main)

** Councilmember Michetich made a motion for APPROVAL of the rezone from R-1 Single Family Residential to C-1 General Commercial, being a tract or parcel of land containing 1.3684 acres of land or 59,606 square feet, located in the S.F. Austin League, Abstract 2, Galveston County, Texas; Said 1.3684 acre tract being all of Tracts 1 and 2 of record in the name of La Marque Investment Group, Inc. in Galveston County Clerk File (G.C.C.F.) Number 9103747 and being all of that tract of land of record in the name of Hazel Benton of record in G.C.C.F. Number 8723178, Said 1.3684 acre tract being more particularly described as bearings based as on said G.C.C.F. No. 9103747. (3197 Main and lot on Duroux and contiguous to 3197 Main)

** Mayor Pro-Tem Bell seconded for the purpose of discussion.

Councilmember Michetich reported that as ex officio to the Planning and Zoning Commission, he attended the meeting where this item was discussed. At that time, the possibility of spot-zoning was discussed, but stated that all of the residents within 200 feet of the property were notified and that there was no negative feedback to rezone from the persons within those parameters.

** Mayor Pro-Tem changed his motion from discussion to APPROVAL of the rezone. **MOTION CARRIED UNANIMOUSLY**. (This item will be on the next agenda in October with an Ordinance)

d. Discussion/possible action regarding the Planning & Zoning recommendation for denial of a re-plat being a tract or parcel of land containing 1.3684 acres of land or 59,606 square feet, located in the S.F. Austin League, Abstract 2, Galveston County, Texas; Said 1.3684 acre tract being all of Tracts 1 and 2 of record in the name of La Marque Investment Group, Inc. in Galveston County Clerk File (G.C.C.F.) Number 9103747 and being all of that tract of land of record in the name of Hazel Benton of record in G.C.C.F. Number 8723178, Said 1.3684 acre tract being more particularly described as bearings based as on said G.C.C.F. No. 9103747. (3197 Main and lot on Duroux and contiguous to 3197 Main)

** Councilmember Michetich made a motion for APPROVAL of a re-plat being a tract or parcel of land containing 1.3684 acres of land or 59,606 square feet, located in the S.F. Austin League, Abstract 2, Galveston County, Texas; Said 1.3684 acre tract being all of Tracts 1 and 2 of record in the name of La Marque Investment Group, Inc. in Galveston County Clerk File (G.C.C.F.) Number 9103747 and being all of that tract of land of record in the name of Hazel Benton of record in G.C.C.F. Number 8723178, Said 1.3684 acre tract being more particularly

1111 Bayou
La Marque, Texas 77568
409.938.9202

described as bearings based as on said G.C.C.F. No. 9103747. (3197 Main and lot on Duroux and contiguous to 3197 Main)

** Mayor Pro-Tem Bell seconded.

** Councilwoman Mc Auliffe is in favor, but reminded them of all of the trees that were located on the above property and asked that they place some substantial landscaping and or hedges on the property once the parking lot is put in to replace some of the trees, that are not able to be saved. **MOTION CARRIED UNANIMOUSLY**.

e. Discussion/possible action regarding adoption of City of La Marque Brand Style Guide.

Public Information Officer Colleen Merritt handed out a brochure to show a few revisions to the brand style that was included in the packet, showing a color pallet. The showing of envelopes and letterhead currently being used was presented and it was said that this would serve to have more continuity and adding some polish.

** Councilmember Lane made a motion to adopt the City of La Marque Brand Style.

** Councilwoman Mc Auliffe seconded. **MOTION CARRIED UNANIMOUSLY**.

f. Discussion/possible action regarding creation of La Marque Renaissance District and adoption of La Marque Renaissance District Development Guidelines.

** Ms. Merritt distributed a few more brochures showing the La Marque Renaissance District Guidelines, outlining areas and showing different colors and designs. "Art of Coffee" is coming into one of the sections of the strip center located in this District and being the first for construction, and a food establishment by the name of "Birdies".

** Mayor Pro-Tem Bell made a motion to approve the creation of La Marque Renaissance District and adoption of La Marque Renaissance District Development Guidelines

** Councilmember Lane seconded. **MOTION CARRIED UNANIMOUSLY**.

g. Discussion/possible action regarding adoption of City of La Marque Social Media Policy.

Being the first task when first employed, Ms. Merritt explained the importance for employees to adopt a Social Media Policy.

1111 Bayou
La Marque, Texas 77568
409.938.9202

** Councilmember Lane made a motion to adopt the City of La Marque Social Media Policy.
** Councilwoman Mc Auliffe seconded. **MOTION CARRIED UNANIMOUSLY**.

(9) APPOINTMENTS/NOMINATIONS

a. Discussion/possible action regarding adopting Resolution No. **R-2018-0022** designating members of the City Council as Representative and Official Alternate to the General Assembly of the Houston-Galveston Area Council for year 2019

** Councilmember Lane nominated Councilmember Michetich to serve as Representative and adopt Resolution No. **R-2018-0022** designating members of the City Council as Representative and Official Alternate to the General Assembly of the Houston-Galveston Area Council for year 2019
** Mayor Pro-Tem Bell nominated Councilwoman Mc Auliffe as Alternate. **NOMINATIONS STOOD AS SUBMITTED**.

b. Discussion/possible action regarding submission of candidate choices for Places 11-14 to the Texas Municipal League Intergovernmental Risk Pool (TMLIRP) Board of Trustees

** Councilwoman Mc Auliffe made a motion to approve the submission of the candidate choices for Places 11-14 to the Texas Municipal League Intergovernmental Risk Pool (TMLIRP) Board of Trustees

** Councilmember Lane seconded. **MOTION CARRIED UANIMOUSLY.**

c. Discussion/possible action regarding appointments and/or reappointments to fill various positions of the Boards and Commissions

** Councilwoman Mc Auliffe reappointed Larry Walker to the Parks Board.
** Councilmember Michetich seconded. **MOTION CARRIED UNANIMOUSLY**.

(10) EXECUTIVE SESSION

There was no Executive Session

(11) REQUEST AND ANNOUNCEMENTS

Councilwoman Mc Auliffe thanked Council for a productive Workshop conducted earlier. Told everyone to be safe.
Councilmember Michetich thanked everyone for attending and encouraged persons to apply for positions to the Boards and Commissions
Mayor Pro-Tem Bell asked the Interim City Manager to provide to City Council legal - alternative meeting settings (anything that the State would deem legal whether it be video-conferencing or teleconferencing) so that it could be

1111 Bayou
La Marque, Texas 77568
409.938.9202

provided at some time for the Boards and Commissions to use and possibly attract more folks to volunteer but that do not have time or don't have sitters, that might be able to meet from home through other technology.

He then welcomed Charlene Warren to the Interim City Manager position, "She has been Ms. Buttlers' right hand for the past three years. She is more than capable of steering the City and directing staff until a permanent replacement is found. But also I want to thank Carol Buttler who has guided the City through difficult times. We went from having a significant deficit to having a significant surplus. We have been on the verge of opening a new Fire Station and have added several staff persons in key positions. She has been responsible for innovating many of our departments, and responsible for our logo and re-brand. We owe Ms. Buttler a debt of gratitude that we cannot pay. I will always remember her for being the right City Manager at the right time and so we wish her a happy and healthy retirement and we wish her the opportunity to live her life to the best of her abilities and we wish you well."

Mayor Hocking concurred. Reminded all of a special scheduled meeting for the following night. They are keeping an eye on a rain event that has potential of coming into the Gulf, but will cause some rain but be out by the end of the weekend. Has plans of taking his wife to Colorado for her birthday, and hopes the weather will cooperate.

(12) ADJOURNMENT

** Councilwoman Mc Auliffe made a motion to adjourn the Regular meeting at 7:06 p.m.

** Mayor Pro-Tem Bell seconded. **MOTION CARRIED UNANIMOUSLY.**

_____
Bobby Hocking, Mayor

ATTEST:

_____
Robin Eldridge, TRMC
City Clerk

CITY COUNCIL AGENDA FORM

Meeting Date: November 12, 2018 | Agenda item: **7&8b**
Prepared by: Suzy Kou | Reviewed by: *Charlene Warren*
Department: Finance

AGENDA ITEM DESCRIPTION: Discussion/possible action regarding Ordinance No. **O-2018-0014,** amending Appendix A, Schedule of Fees and Charges of the Code of Ordinances, City of La Marque, Texas by amending prescribed solid waste collection charges. *THIS IS SECOND AND FINAL READING*

X

ATTACHMENTS FOR REFERENCE

1. Ordinance

STAFF BRIEFING:

- On July 27, 2017, Council approve contract with Waste Management to perform solid waste services effective October 1, 2017 through September 30, 2024 with renewal option.
- Per contract terms, fees shall be increased by 3% each year until the end of contract term.
- Per Council, the 56 cents requested uncontrollable recycling increase by Waste Management will **not** be a part of the new rates. This cost will be absorbed by the City under budget year 2018-19.

HISTORY: N/A

TARGET IMPLEMENTATION: November 13, 2018

SIGNIFICANT ACTION DATES:
October 8, 2018- Ordinance approval - First Reading.
November 12, 2018- Ordinance approval - Second and Final Reading.
December 1, 2018 – Effective date – with first billing cycle

ACTION:

☒ Ordinance ☐ Resolution
☐ Special Presentation ☐ Proclamation
☐ Finance Report ☐ Public Hearing
☐ Other
☒ Mark if this item does not conflict with any Resolution, Ordinance or City Charter, policies, procedures

Cost Details:	
Budgeted	$1,802,983
Actual Bid	
Estimated Expenditure	**$1,844,983**
Acct. Name(s)	Various sanitation expenditure accounts
Line Item #	Various
Other Funding	Fund Balance

CITY COUNCIL AGENDA FORM

STAFF'S RECOMMENDATION: Motion to approve Ordinance No. **O-2018-0014**, amending Appendix A, Schedule of Fees and Charges of the Code of Ordinances, City of La Marque, Texas by amending prescribed solid waste collection charges**.** *THIS IS SECOND AND FINAL READING*

FISCAL IMPACT: Estimated city absorption of $42,000 of recycling fees by Waste Management, which will come out of fund balance.

ORDINANCE NO. O-2018-0014

AN ORDINANCE AMENDING APPENDIX A, SCHEDULE OF FEES AND CHARGES OF THE CODE OF ORDINANCES, CITY OF LA MARQUE, TEXAS BY AMENDING PRESCRIBED SOLID WASTE COLLECTIONS CHARGES.

NOW, THEREFORE BE IT ORDAINED BY THE CITY COUNCIL OF THE CITY OF LA MARQUE, TEXAS:

Section 1. That Appendix A, Schedule of Fees and Charges, Solid Waste Collection Charges, of the La Marque Code of Ordinances is hereby amended to read as follows:

APPENDIX A: SCHEDULE OF FEES AND CHARGES

Solid Waste Collection Charges

There are hereby levied the following charges, to be collected from the owner occupying any premises located or from the occupant or person in possession or control of any premises located on an established garbage and rubbish route within the city, for the removal and disposition of garbage and rubbish;

(1) Residential Rates Per Month per Residential Service Unit (not including sales tax)

(a) Twice a week Residential Collection Rate- $21.92.

(b) Every other week Recycling Collection- Included.

(c) Once a week Bulky Waste Collection- Included.

(d) At Your Door Household Hazardous Waste/Electronics Collection- Included.

(e) Residential Service Unit- Additional Cart- $5.15 per Cart.

(f) Bulky Waste in excess of 5 cubic yards- $154.50 per occurrence.

(g) Replacement Cart- $72.10 per Cart.

(2) Commercial Unit Collection Rates

(a) Castors per month- $15.45.

(b) Locking Device per month- $36.05.

(c) Monthly Commercial Unit Rates

Container Size/Type	Weekly Collection Frequency						
	1	2	3	4	5	6	Extra P/U
Commercial Hand PU 96 Gal Cart	N/A	$ 45.71	N/A	N/A	N/A	N/A	N/A
Commercial Hand Extra Cart (Each)		$ 15.45					
2 yd FEL Container	$ 87.75	$ 138.52	$ 202.73	$ 232.76	$ 279.37	$ 330.16	$ 51.50
3 yd FEL Container	$ 95.12	$ 181.62	$ 242.29	$ 256.47	$ 366.80	$ 426.05	$ 56.65
4 yd FEL Container	$ 121.35	$ 199.24	$ 270.96	$ 337.25	$ 411.90	$ 482.27	$ 61.80
6 yd FEL Container	$ 158.83	$ 241.71	$ 365.42	$ 476.72	$ 579.24	$ 674.83	$ 66.95
8 yd FEL Container	$ 207.07	$ 305.09	$ 431.20	$ 558.35	$ 697.00	$ 848.64	$ 72.10

(d) Roll Off Bin (non-Temporary) and Compactor Rates

Roll off Size/Type	Container Rental Fee (Per Month)	Initial Delivery Fee (One-time)	Collection Fee (Per Haul)	Disposal Fee (Per Ton)
10 CY Roll off	$ 128.75	$ 150.00	$ 230.72	$ 31.93
20 CY Roll off	$ 128.75	$ 150.00	$ 230.72	$ 31.93
30 CY Roll off	$ 128.75	$ 150.00	$ 230.72	$ 31.93
40 CY Roll off	$ 128.75	$ 150.00	$ 230.72	$ 31.93
30 CY Roll off Compactor	$ 360.50	*	$ 230.72	$ 31.93
40 CY Roll off Compactor	$ 360.50	*	$ 230.72	$ 31.93
**** To be determined by Contractor and Customer***				

Section 2. Effective Date: The effective date shall coincide with the first utility billing after December 1, 2018.

PASSED AND APPROVED by the City Council of the City of La Marque on the first reading this the **8th** day of **October**, 2018.

PASSED, APPROVED AND ADOPTED by City Council of the City of La Marque on this the second and final reading this the _____day of _____, 2018.

CITY OF LA MARQUE, TEXAS

_____
Bobby Hocking, Mayor

ATTEST:

_____
Robin Eldridge, TRMC, City Clerk

APPROVED AS TO FORM:

_____
Ellis J. Ortego, City Attorney

CITY COUNCIL AGENDA FORM

Meeting Date: November 12, 2018 Agenda item: **9a**
Prepared by: Deck Shaver/D. Ho Reviewed by: *Charlene Warren*
Department: Public Svcs./Adico

AGENDA ITEM DESCRIPTION: Discussion/possible action regarding adopting Ordinance No. **O-2018-0018**, accepting the City of La Marque Engineering Design Criteria Manual prepared by Adico LLC Consulting Engineers. ***THIS IS THE FIRST READING***

X

ATTACHMENTS FOR REFERENCE

1. Ordinance
2. Proposed City of La Marque Engineering Design Criteria Manual

STAFF BRIEFING:

Per Dinh V. Ho, P.E., City Consulting Engineer:

- The City of La Marque is experiencing considerable development throughout its jurisdiction. This includes development both inside the City Limits and within the City's Extraterritorial Jurisdiction (ETJ).
- It is, therefore, important for the City Council to approve a policy that sets out the procedures for the design, inspection, approval and acceptance of public infrastructure within its jurisdiction.
- These policies and procedures apply to design and construction in both subdivisions and commercial sites where it is anticipated that connections to the public infrastructure will be made, and where the infrastructure will be conveyed, either upon completion or in the future, to the City of La Marque for operation and maintenance.
- These procedures are designed so the developers, engineers and contractors will know both the criteria and procedures to be followed and the costs for the required reviews and inspections in advance.
- It is important that all publicly accepted, operated and maintained infrastructure constructed within its city limits and ETJ be compliant with the City's standards and requirements. It is anticipated that even if the City does not accept the infrastructure for immediate operation and maintenance, it may eventually.

HISTORY:

June 16, 2018 - City Manager authorized Adico Engineers LLC, consulting City Engineers to prepare an Engineering Design Criteria Manual.

TARGET IMPLEMENTATION: January 1, 2019

SIGNIFICANT ACTION DATES:

September 2018 - Draft Engineering Design Criteria delivered to City staff for review.

CITY COUNCIL AGENDA FORM

October 2018 - Adico Engineers, LLC addressed staff review comments and prepared final version of proposed Engineering Design Criteria Manual.

ACTION:

- ☒ Ordinance
- ☐ Resolution
- ☐ Special Presentation
- ☐ Proclamation
- ☐ Finance Report
- ☐ Public Hearing
- ☐ Other
- ☒ Mark if this item does not conflict with any Resolution, Ordinance or City Charter, policies, procedures

Cost Details:	
Budgeted	
Actual Bid	$14,500.00
Estimated Expenditure	$14,500.00
Acct. Name(s)	Professional services
Line Item #	01-4040-12-00; 02-4040-22-00
Other Funding	

STAFF'S RECOMMENDATION: Motion to adopt Ordinance No. **O-2018-0018**, accepting the City of La Marque Engineering Design Criteria Manual prepared by Adico LLC Consulting Engineers.

FISCAL IMPACT: Expenditure of $14,500.00 from Professional Services – Streets and Water/Wastewater Maintenance Departments.

ORDINANCE NO. O-2018-0018

AN ORDINANCE OF THE CITY OF LA MARQUE, TEXAS, ADOPTING THE LA MARQUE ENGINEERING DESIGN CRITERIA MANUAL; REQUIRING COMPLIANCE; PROVIDING FOR DENIAL OR REVOCATION OF APPROVAL AND PERMITS DUE TO NONCOMPLIANCE; PROVIDING FOR OTHER REGULATIONS AND REQUIREMENTS; PROVIDING A PENALTY NOT TO EXCEED $500 FOR EACH VIOLATION; PROVIDING FOR SEVERABILITY; AND MAKING OTHER PROVISIONS RELATED TO THE SUBJECT.

WHEREAS, the City of La Marque, Texas (the "City") is a home rule municipality organized under the Constitution and the laws of the State of Texas; and

WHEREAS, the City's charter provides that it may exercise all powers of local self-government and powers granted to home rule cities by State law; and

WHEREAS, the City Council wishes to adopt uniform engineering design standards to provide for the orderly development of land; and

WHEREAS, the City Council has determined that adopting these standards is in the best interest of the public health, safety and general welfare of the citizens of the City;

NOW THEREFORE BE IT ORDAINED BY THE CITY COUNCIL OF THE CITY OF LA MARQUE, TEXAS:

Section 1. Adoption of Engineering Design Criteria Manual.

The attached City of La Marque Engineering Design Criteria Manual (the "Engineering Design Criteria Manual" or "Design Criteria Manual") is hereby adopted, and the regulations and provisions therein stated are hereby established. Any reference in any other ordinance, policy, or other source to an engineering design criteria manual or design criteria manual of the City of La Marque shall refer to the attached City of La Marque Engineering Design Criteria Manual, as amended from time to time. Any reference herein to "this Ordinance" or similar terms shall also include the Engineering Design Criteria Manual hereby adopted, and that manual is a part of this ordinance.

Section 2. Compliance Required.

Any construction, planned construction, or plans for which a permit or approval

from the City of La Marque is required, and such permit is issued after the effective date of this ordinance, must be done in compliance with the Design Criteria Manual, according to its terms.

Section 3. Denial or Revocation of Permits for Approval.

The failure of any plans, construction, or planned construction to comply with Design Criteria Manual shall be grounds for the City to deny or revoke any approval or permit from the City concerning such plans, construction, or planned construction.

Section 4. Conflict with Other Requirements.

The attached Engineering Design Criteria Manual replaces the prior Engineering Design Criteria Manual of the City. Otherwise, the attached Engineering Design Criteria Manual is cumulative of all requirements from any other source and shall not authorize noncompliance with any other regulation or requirement from any source. In the event of any conflict in terms, the stricter requirement shall govern and control.

Section 5. Offenses, Penalties, and Remedies.

a. Any person who participates in any violation of any provision of this Ordinance shall be deemed guilty of a misdemeanor and, upon conviction, shall be fined in an amount not to exceed $500.00. Each day or portion of a day a violation continues, occurs, or recurs shall constitute a separate offense.

b. The City shall have the right to enforce this ordinance by injunction and by other actions in a civil court and/or by any and all remedies from any and all sources.

c. All rights and remedies of the City provided in this ordinance shall be cumulative of all other rights and remedies provided herein, by other ordinances, or by any source.

d. The exercise of any right or remedy by the City shall not be construed as an election of remedies and shall not impair any other right or remedy of the City. The City may exercise any right or remedy herein either alone or together with any other right or remedy under this ordinance, any other ordinance, or any applicable law. Without limiting the generality of the foregoing, pursuing or receiving any civil remedy for any violation of this ordinance shall not preclude the pursuit or receipt of any criminal penalty for any violation hereof.

Section 6. Severability.

In the event any clause, phrase, provision, sentence, or part of this Ordinance or the application of the same to any person or circumstance shall for any reason be

adjudged invalid or held unconstitutional by a court of competent jurisdiction, it shall not affect, impair, or invalidate this Ordinance as a whole or any part or provision hereof other than the part declared to be invalid or unconstitutional; and the City Council of the City of La Marque, Texas, declares that it would have passed each and every part of the same notwithstanding the omission of any such part thus declared to be invalid or unconstitutional, whether there be one or more parts.

Section 7. Repeal.

This ordinance is intended to be cumulative and shall not repeal any previous ordinance except to the extent that any provision of such ordinance is inconsistent and cannot be reconciled with any provision contained herein.

Section 8. Effective Date.

This ordinance shall be effective immediately upon adoption and publication of this ordinance or a caption that summarizes the purpose of this ordinance and the penalty for violating this ordinance in every issue of the official newspaper for two days, or one issue of the newspaper if the official newspaper is a weekly paper, in accordance with Section 52.011 of the Texas Local Government Code.

PASSED AND APPROVED on First reading this the ____ day of _____, 2018

PASSED, APPROVED AND ADOPTED on second and final reading this the _____ day of _____, 2018.

CITY OF LA MARQUE, TEXAS

_____
Bobby Hocking, Mayor

ATTEST:

_____
Robin Eldridge, City Clerk

APPROVED AS TO FORM:

_____
Ellis J. Ortego, City Attorney

CITY OF LA MARQUE, TEXAS

ENGINEERING DESIGN CRITERIA MANUAL

Prepared by:

Adico, LLC – Consulting Engineers

Adopted by the La Marque City Council

Date: _____

CITY OF LA MARQUE
GALVESTON COUNTY, TEXAS

ENGINEERING DESIGN CRITERIA MANUAL

TABLE OF CONTENTS

CHAPTER	TITLE	# PAGES
1	**GENERAL REQUIREMENTS**	**4**
	1.1 General	
	1.2 Preliminary Research	
	1.3 Fees	
	1.4 Design Review Requirements for Public or Private Improvements	
	1.5 Construction and Acceptance Requirements for Public Infrastructure Projects	
	1.6 Approvals and Variances	
2	**CONSTRUCTION PLAN AND MISCELLANEOUS REQUIREMENTS**	**9**
	2.1 Required Plan Sheets	
	2.2 Drawing Requirements	
	2.3 Easements	
	2.4 Utility Locations	
	2.5 Private Facility Locations	
	2.6 Crossings	
	2.7 Trench Safety	
	2.8 Benchmarks	
	2.9 Residential Lots and Improvements	
	2.10 Flood Plain Management	

3 WATER SYSTEM DESIGN CRITERIA……..……**18**

3.1 Water System Design General

3.2 Definitions

3.3 Design Requirements

3.4 Quality Assurance

3.5 Reclaimed Water

4 SANITARY SEWER DESIGN CRITERIA……**17**

4.1 Sanitary Sewer Design General

4.2 Definitions

4.3 Design Requirements

4.4 Quality Assurance

4.5 Unsewered Building Sites and Septic Tanks

5 STORM WATER DRAINAGE DESIGN CRITERIA..…**19**

5.1 Storm Water Drainage Design General

5.2 Definitions

5.3 Design Requirements

5.4 Submittals

5.5 Quality Assurance

6 PAVING DESIGN CRITERIA……..……..……..**10**

6.1 Paving Design General

6.2 Definitions

6.3 Design Requirements

6.4 Quality Assurance

7 SUBDIVISION INFRASTRUCTURE APPROVAL PROCEDURES…..**5**

APPENDIX A **STANDARD CONSTRUCTION DETAILS**

APPENDIX B **COVER SHEET SIGNATURE BLOCK**

APPENDIX C **TITLE BLOCK**

APPENDIX D **DESIGN MODIFICATION FORM**

CITY OF LA MARQUE

CHAPTER 1

GENERAL REQUIREMENTS

CHAPTER 1 – GENERAL REQUIREMENTS

1.1 GENERAL

1.1.1 This Manual describes the general requirements for the preparation of construction plans and the supporting documents required for submittal and approval by the City of La Marque. Specific design requirements, in addition to these standards, may be required by the City of La Marque.

1.1.2 Construction plans for public or private improvements within La Marque city limits shall be approved by the City of La Marque and applicable Drainage District. Construction plans for public or private improvements within the City of La Marque extraterritorial jurisdiction (ETJ) shall be reviewed and approved by the City of La Marque, Galveston County Engineering Department, respective Municipal Utility Districts, and applicable Drainage District.

1.1.3 All projects that are required to conform to these Standards shall also comply with all applicable City of La Marque ordinances.

1.1.4 All construction plans and supporting documentation shall conform to the requirements of these Standards and regulations of all Federal, State, County, and any other entities having jurisdiction.

1.2 PRELIMINARY RESEARCH

1.2.1 Personnel from the City will be available for preliminary development meetings to discuss a proposed project with the project engineer and/or developer, if requested. This preliminary meeting between the City and the engineer/developer should be scheduled with the City Development Coordinator before submittal of any documents for review.

1.2.2 Research of all existing utility and right-of-way information with City, County, State, and other public and private utility agencies shall be completed and documented prior to submittal of any plans to the City.

1.3 FEES

1.3.1 All plan and plat review fees shall be paid at the time of submittal to the City before initiation of review. All permits shall be paid prior to beginning construction on a project. Please refer to the City's Official Fee Schedule.

1.4 DESIGN REVIEW REQUIREMENTS FOR PUBLIC OR PRIVATE IMPROVEMENTS

1.4.1 Submit two (2) copies of construction plans, one (1) digital copy (pdf) and supporting documentation to the City for review. Plans will be circulated to the appropriate departments for their review. Comments will be issued to the engineer in a timely manner.

1.4.2 Based on the trip estimates for the proposed development, a Traffic Impact Analysis may be required to determine any necessary traffic mitigation measures.

1.4.3 A Final Drainage plan must be approved by the appropriate Drainage District prior to submitting to City of La Marque for final plan approval.

1.4.4 After all comments have been adequately addressed, submit previous comments and response letter, include one digital copy of the revised construction plans to the City for final approval.

1.4.5 After final approval has been granted, submit one original mylar cover sheets to the City for approval signatures, along with (1) digital file (PDF) and electronic copy.

1.4.6 Submit two (2) copy and one (1) digital file (PDF) of the approved construction plans to the permit office at the time permitting for Engineering file and inspection.

1.4.7 All separate or special easements that may be required for construction shall be recorded with the plat prior to final approval. If platting is not required as part of the project, then record all easements prior to final approval.

1.5 CONSTRUCTION AND ACCEPTANCE REQUIREMENTS FOR PUBLIC INFRASTRUCTURE PROJECTS

1.5.1 Refer to the City of La Marque's Construction, Inspection, Approval and Acceptance Procedures for Public Infrastructure.

1.6 APPROVALS AND VARIANCES

1.6.1 Approvals required in these Standards are the responsibility of the Owner. Failure to obtain appropriate approvals may be grounds for suspension of construction until appropriate approvals are granted. Items that do not conform to these Standards shall be submitted for a variance request.

1.6.2 Variances, as required by these Standards, shall be requested by the Owner prior to, or at the time of, submittal of review plans for the project. In order to be valid, all variance items must be granted by the City Administrator upon written recommendation by the City Engineer.

1.6.3 Construction work related to any variance item should not begin until the City has granted approval. Design engineer shall submit a Design Criteria Modification form for variance requests. Any work that proceeds without approval will be subject to

removal and replacement, at no cost to the City, in accordance with these Standards.

[END OF DOCUMENT]

CITY OF LA MARQUE

CHAPTER 2

GRAPHIC REQUIREMENTS

CHAPTER 2 – GRAPHIC REQUIREMENTS

2.1 REQUIRED PLAN SHEETS

2.1.1 Cover Sheet

2.1.2 Plat (latest version of the plat shall be included in the drawings)

2.1.3 Construction Notes and Legend

2.1.4 Overall Layouts for Proposed Improvements (Water and Sewer, Drainage, Paving, etc.)

2.1.5 Drainage Area Map and Calculations

2.1.6 Lot Grading Plan

2.1.7 Plan and Profiles

2.1.8 Storm Water Pollution Prevention Plan

2.1.9 Specific Construction Details

2.1.10 Standard City of La Marque Construction details

2.2 DRAWING REQUIREMENTS

2.2.1 Provide a cover sheet for all projects involving three or more drawings (including detail sheets). Plan sheet numbers and names shall be shown on the cover sheet. Include a vicinity map to identify project location within the City. Provide the City of La Marque signature block for the City Engineer with a note stating that approval is valid for 1 year only from date of signatures. Provide a signature block for the City Engineer on all internal sheets. Signature blocks is provided in Appendix “B”.

2.2.2 Drawings shall be prepared on nominal 24 inch x 36 inch overall drawings.

2.2.3 Show service area on cover sheet or area map.

2.2.4 After final approval has been granted, submit drawings with mylars on India ink or produced by on mylars. The engineer shall also submit, at this time, electronic AutoCAD (.dwg) and digital file in (PDF) file(s) of all construction plan sheets on digital versatile disk (DVD).

2.2.5 Details of special structures (not covered by approved standard drawings, such as stream or gully crossings, special manholes, or junction boxes, etc.) shall be drawn with vertical and horizontal scales equal to each other.

2.2.6 Each set of construction drawings shall contain overall paving and utility layout drawings indexing specific plan and profile sheets. Show all lot lines, property lines, rights-of-way lines and easement lines. Standard City drawings, where applicable, shall be included. All sheets shall have standard title blocks.

2.2.7 Draw overall layouts to a scale of 1 inch = 50 feet, 60 feet, 100 feet, or 200 feet.

2.2.8 Plan stationing must run from left to right, except for short streets or lines originating from a major intersection, where the full length can be shown on one sheet.

2.2.9 A north arrow is required on all sheets and should be oriented either toward the top or to the right.

2.2.10 Standard scales permitted for plans and profiles of paving and utility construction drawings are as follows:

A. Major thoroughfares, streets with esplanades over 400 feet in length, or special intersections/situations:

a. 1 inch = 10 feet horizontal, 1 inch = 1 feet vertical

b. 1 inch = 20 feet horizontal, 1 inch = 2 feet vertical

B. Minor or residential single-family streets:

a. 1 inch = 20 feet horizontal, 1 inch = 2 feet vertical

b. 1 inch = 40 feet horizontal, 1 inch = 4 feet vertical

c. 1 inch = 50 feet horizontal, 1 inch = 5 feet vertical

2.2.11 Each sheet of the plans shall have a benchmark elevation and description, along with applicable flood plain information. Include Base Flood Elevation, FIRM panel number and flood zone designation. All files shall be designed to Texas State Plane Coordinate System – South Central 4204, NAVD 88, or current adjustment.

2.2.12 The seal, date, and original signature of the Licensed Professional Engineer responsible for the drawings shall be required on each sheet developed by the engineer. The engineer may use a stamped or embossed imprint for his seal; however, the embossed imprint must be shaded such that it will reproduce on prints.

2.2.13 If a roadway exists where drawings are being prepared to improve or construct new pavement or a utility, label the existing roadway width, surface type, and thickness, if available without destruction of pavement. Pavement thickness can be ascertained by coring. The resultant void shall be grout-filled.

2.2.14 Show all streets and/or roadway alignments on all drawings.

2.2.15 Develop drawings to accurate scale showing proposed pavement, typical cross-sections, details, lines and grade, all existing topography within street right-of-way, and any easement adjacent to the right of way. At intersections, the cross-street details shall be shown at sufficient distance (20 feet minimum distance outside the primary roadway right-of-way) in each direction along the cross-street.

2.2.16 Match lines shall not be placed at cross-street intersection for roadway alignment.

2.2.17 Natural ground profiles shall be shown as follows:

A. For privately-funded projects, centerline profiles are satisfactory except where a difference of 0.50 feet or more exists from one right-of-way or easement line to the other, in which case, dual profiles are required.

B. For the City of La Marque projects, provide natural ground profiles for each right-of-way line. Easement profiles shall also conform to this requirement.

2.2.18 Identify all lot lines, property lines, easements, right-of-way, and drainage outfalls.

2.2.19 Label each plan sheet as to street/easement widths, pavement widths, pavement thickness where applicable, type of roadway materials, curbs, intersection radii, curve data, stationing, existing utilities (type and location), and any other pertinent feature affecting design.

2.2.20 Show all utility lines four inches or larger within the rights-of-way or construction easement in profile view. Show all utility lines, regardless of size, in the plan view, including fiber optic cables.

2.2.21 Graphically, show flowline elevations and direction of flow for all existing ditches.

2.2.22 Label proposed top of curb grades except at railroad crossings. Centerline grades are acceptable only for paving without curbs and gutters.

2.2.23 Curb return elevations for turnouts shall be shown in profiles.

2.2.24 The surface elevation at the property line of all existing driveways shall be shown in profile.

2.2.25 Station all esplanade noses or the centerline of all esplanade openings with esplanade width shown - both existing and proposed.

2.2.26 The design of both roadways is required on all paving sections with an esplanade.

2.2.27 Station all point of curvatures (PC) and point of tangency (PT), radius returns, and grade change point of intersection (PI) in plan view. Station all radius returns and grade change PIs in profile with their respective elevations.

2.2.28 Standard City Details shall be included, when applicable.

2.2.29 All property ownership and easement recordation information shall be shown on the plans.

2.2.30 Provide stormwater pollution prevention plan, including details on all public and private projects.

2.3 EASEMENTS

2.3.1 All easements and recording information, existing and proposed, shall be shown on the construction plans.

2.3.2 Storm sewer, sanitary sewer, and water line easements shall be dedicated for the specific intended use. Easements for a specific facility shall be exclusive and shall not overlap other easements, except to cross the easements.

2.3.3 Dry Utility Easements shall be minimum sixteen-feet (16').

2.4 UTILITY LOCATIONS

2.4.1 All utilities shall be underground with the exception of electric primary lines. The electric primary lines, defined as feeders or three phase lines, should be located around the subdivision perimeter whenever possible.

2.4.2 Water Line Location

A. All water lines shall be located within a public right-of-way or within dedicated waterline easements. The location of water lines within a public street right-of-way is described in Section 3.3.3.

B. Water lines shall not be located in combination easements.

2.4.3 Sanitary Sewer Location

A. Sanitary sewers of twelve inches (12") or larger in diameter shall be within a public right-of-way or an easement adjoining the right-of-way. Sanitary sewers may be located in exclusive or combination easements provided the easement widths comply with Section 2.3.

B. Sanitary sewers shall not be located in side lot easements.

C. Sanitary sewers should be located within the right-of-way between the property line and the back of curb on the opposite side of the right-of-way from the water main.

2.4.4 Storm Sewers

A. Storm sewers shall be located in the public street right-of-way in accordance with Section 5.3.6.E.c.

B. All storm sewer lines shall be located within public rights-of-way or approved easements. Placement of a storm sewer in side lot and back lot easements is discouraged.

2.5 PRIVATE FACILITY LOCATIONS

2.5.1 Installation of private facilities, including utilities, in public road rights-of-way and their adjoining easements shall be approved by the City of La Marque.

2.5.2 Private facilities shall not conflict with other facilities in the right-of-way and shall not be located in exclusive easements as required in these Standards. All structures within the public right-of-way require approval from the City Engineer and shall be located so as to not interfere with existing or proposed public facilities.

2.5.3 All facilities in the right-of-way shall be located at least two feet (2') behind the curb and all underground facilities in the right-of-way shall be located at least two and one-half feet (2.5') below the top of curb on a public street.

2.5.4 Private facilities shall be constructed in accordance with construction plans approved by the City Engineer.

2.5.5 Landscaping within the public right-of-way or adjoining easements shall not affect public utilities or traffic visibility.

2.6 CROSSINGS

2.6.1 Highway Crossings - All State and County Roads

A. State Highway crossings shall be constructed in conformance with the requirements of the Texas Department of Transportation.

B. A water main shall be encased in a steel pipe casing extending at least five feet (5') from outside edge of each service road or outside edge of pavement, across the right-of-way to a similar location on the other side of the highway. For highway or roadway crossing with open ditches, the casings shall extend from right-of-way to right-of-way.

C. County road crossing shall be constructed in accordance with Galveston County requirements.

D. Where additional right-of-way has been acquired or will be required for future

widening, the casing, where required, should be carried to within ten feet (10') of each future right-of-way line.

2.6.2 Street Crossings

A. All water main and sprinkler line crossings under major thoroughfare boulevards shall be encased. For all water mains, steel casing shall be used. For fire sprinkler lines, SDR 26 PVC or welded steel pipe shall be used.

B. Conduits and sewers that do not carry liquid under pressure may be bored and jacked or microtunneled into place without an encasement pipe.

C. Crossings under existing concrete streets shall be constructed by boring and jacking or microtunneling. PVC pipe shall be jacked into place using equipment designed for that purpose. Water may be used to facilitate the boring and jacking operations. Jetting the pipe main into place will not be allowed. When conditions exist that warrant open cut across an existing street, specific approval by the City Engineer is required.

D. All street crossings shall be constructed in accordance with construction plans approved by the City. All street crossings shall be inspected by the City. All street crossings shall meet the requirements of these Standards.

2.6.3 Railroad and Pipeline Crossings

A. For railroad crossings, the carrier pipe shall be encased in steel pipe casing extending from right-of-way to right-of-way.

B. All construction within the railroad or pipeline right-of-way shall conform to minimum requirements set out in the agreement with the owner of the right-of-way.

2.6.4 Ditch and Stream Crossings

A. Aerial crossings attached to the vehicular bridge structure are preferred by the City.

B. Where existing or proposed bridges have sufficient space and structural capacity for installing water mains or conduits (twelve inches (12") or smaller) under the bridge, but above the top of the bent cap elevation, such installation will be permitted upon specific approval of the construction plans. In all cases, the water main or conduit shall be above the bottom chord of the bridge and eighteen inches (18") above the 100-year water surface elevation. All conduits attached to a bridge shall be constructed using steel pipe and shall extend a minimum of ten feet (10') beyond the bridge bent or to the right-of-way line, whichever is greater. All conduit attached to a bridge shall be maintained by the owner of the conduit

or will be subject to removal.

C. Separate, free-standing crossings across drainage ways are discouraged.

D. All stream or ditch crossings shall be constructed of steel pipe from right-of-way to right-of-way.

2.7 TRENCH SAFETY

2.7.1 Trench safety is required for all excavations greater than five feet (5') in depth, and shall conform to all applicable OSHA regulations.

2.8 BENCH MARKS

2.8.1 A permanent bench mark shall be set in each subdivision section or at a spacing of one mile, whichever is greater. The benchmark shall have an elevation based on the North American Vertical Datum of 1988 (NAVD 88), current adjustment.

2.8.2 The bench mark elevation and location shall be certified by a registered public surveyor as a Texas Society of Professional Surveyors (TSPS) Standard and Specifications for Category 8, TSPS Third Order Vertical Control Survey.

2.8.3 Accuracy of elevations for benchmarks shall be Texas Society of Professional Surveyors Category 8, Third Order.

2.8.4 All bench mark locations shall be provided with ties to existing monuments including coordinates based on the North American Vertical Datum of 1988 (NAVD 88), Texas State Plane Coordinate System, South Central Zone.

2.8.5 Bench marks shall be constructed of a brass disc set in concrete. The concrete footing for the bench mark shall be eight inches (8") in diameter and three feet (3') deep. Concrete shall be reinforced with two number four (2-#4) bars.

2.8.6 The construction plans shall clearly identify the location of the benchmark and shall include a complete description, coordinates and elevation, with adjustment date, of the benchmark.

2.9 RESIDENTIAL LOTS AND IMPROVEMENTS

2.9.1 All residential lots shall drain to a public right-of-way directly adjoining the lot. Drainage from a residential lot to a public right-of-way at the rear or side of a lot may be permitted provided the drainage system has been properly designed to accept the flow. Drainage from a residential lot to an adjoining greenbelt or golf course shall require a public easement for drainage purposes to be maintained by the homeowner's association or appropriate entity. Drainage to a private easement shall

be noted on the recorded subdivision plat. Drainage to a drainage district easement shall be approved by applicable Drainage District.

2.9.2 A lot grading plan showing proposed minimum slab elevations shall be included in the construction plans. If slab elevations do not change, a notice of minimum elevation will suffice.

2.11 FLOOD PLAIN MANAGEMENT

2.10.1 The City Code Enforcement Officer is the acting flood plain manager for the City of La Marque. All flood plain development within city limits or the ETJ shall be reviewed and approved by the City Engineer.

2.10.2 Amendments to the published flood insurance rate maps, map revisions and all requests for changes to the base flood elevation within La Marque city limits or its ETJ shall be submitted to the City Engineer for review.

2.10.3 All data submitted shall be prepared under the supervision of a registered professional engineer and/or a registered public surveyor and shall comply with all requirements of the Federal Emergency Management Agency National Flood Insurance Program Regulations.

CITY OF LA MARQUE, TEXAS

CHAPTER 3

WATER SYSTEM DESIGN CRITERIA

CHAPTER 3 – WATER SYSTEM DESIGN

3.1 WATER SYSTEM DESIGN GENERAL

3.1.1 Criteria for the design of water service and water distribution lines are herein established. All water lines constructed within the City of La Marque or its Extraterritorial Jurisdiction (ETJ) shall follow these criteria.

3.1.2 Design, construction and sizing of all water mains and appurtenances shall meet or exceed the requirements of the Texas Commission of Environmental Quality (TCEQ) as per 30 TAC Chapter 290 and the Texas Board of Insurance (TBI).

3.1.3 The public water system shall not extend beyond the individual water meter. All water line construction in public rights-of-way up to and including construction to the water meter shall conform to these standards.

3.1.4 Design and construction shall conform to the City of La Marque standard details and specifications.

3.2 DEFINITIONS

3.2.1 Water line – Closed conduit designed to distribute potable water to various locations for human consumption, and to provide fire protection. Line size and fire protection accessory locations are dependent on distance from primary source and quantity of demand.

3.3 DESIGN REQUIREMENTS

3.3.1 Easements: The following minimum easements are required when facilities are not located within public street rights-of-way:

A. Fire hydrants located outside of public rights-of-way or water line easements shall be encompassed by a ten-foot by ten-foot (10’x10’), exclusive, easement. Fire hydrants shall not be located within any other type of easements.

B. Water meter easements shall be exclusive and should be located adjoining a public right-of-way or water line easement.

C. Two-inch (2”) and smaller meters serving non-residential and multi-family developments shall be located inside rights-of-way, water line easements, or in a minimum 5-foot by 5-foot (5’x5’) exclusive water meter easement.

D. Three-inch (3”) and larger meters shall be set in a minimum of ten-foot by twenty-foot (10’x20’) exclusive, water meter easements.

E. Water lines may be located in easements not adjacent to public street rights-of-way. These water lines shall be centered in a fifteen foot (15') wide exclusive easement restricted to water only.

F. For new construction, any water line, except at a fire hydrant, located less than five feet (5') from the right-of-way line and within the right-of-way shall have a water line easement adjoining the right-of-way. Water line easements adjoining a right-of-way shall have a minimum width of five feet (10').

G. Water lines should be located at the center of a ten-foot (10') water line easement, provided the easement adjoins the public right-of-way.

3.3.2 Water Lines:

A. Locate water lines within street rights-of-way, public utility easements, or dedicated water line easements:

a. No less than a 4-inch water line is allowed.

b. A dead end 4-inch line may supply a maximum of 10 lots, shall not exceed 400 feet in length, and shall terminate with a blow off or loop back. Fire hydrants are not allowed on a 4-inch line.

c. Six-inch interconnected/looped mains shall be a maximum of 800 feet long, and shall be supported on both ends by an 8-inch main or larger. Dead end 6-inch lines shall not be more than six hundred feet (600') in length and shall terminate with a blow-off valve. Only one fire hydrant or flushing valve is allowed on any length of 6-inch diameter line.

d. Except when 4-inch and 6-inch diameter lines are permitted under the above criteria, all water lines shall have a minimum diameter of 8-inches.

e. Ten-inch diameter water line is not permitted.

f. Pipe with a minimum 12-inch diameter should be used for lines greater than 2000 feet in length as determined by the Professional Engineer of Record and the City of La Marque.

g. Dead-end lines:

(1) Dead-end lines should be avoided whenever possible, and may only be considered when a looped or interconnected water main system is not nearby.

(2) The design of all water distribution systems should include the opportunity for future looping or interconnect of any approved or

proposed dead-end line. Waterline line shall be extended to the boundary of the development along public right-of-way as required for future connection.

(3) Dead-end lines within public right-of-way:

(a) On permanent dead-end lines not serving residential cul-de-sacs, the line shall be 8 inches in diameter and shall not exceed more than 700 feet in length from the closest interconnection main line and shall terminate with a fire hydrant, flushing valve or blow-off valve.

(b) In temporary dead-end situations or if the possibility for future extension of the water line exists, do not reduce pipe sizes successively. Carry 8-inch diameter pipe to the last appurtenance or the plug. Place the last service as near as possible to the end and install a standard blow off valve and box at the end of the 8-inch diameter line. The maximum length of such a line shall be 700 feet.

(c) In unavoidable permanent dead-end situations, reduce the sizes of pipe successively. Carry a 6-inch pipe to the last fire hydrant, then use 4-inch pipe to the end of the line (400'maximum). Install a 2-inch blow-off valve at the end of the 4-inch diameter line.

(4) Water lines located in a public easement on private property in multi-family residential applications with 1 or more fire hydrants or flushing valves shall be 8-inch diameter with an interconnection to at least 2 supply sources when possible.

(a) Appropriately sized domestic service shall be taken from the 8-inch lines.

(b) If requested, the design engineer shall submit water/hydraulic modeling data to the City Engineer demonstrating that adequate water pressures can be maintained given projected water demand in non-single family residential applications.

(c) The design engineer shall submit water/hydraulic-modeling data to the City Engineer demonstrating that fire flow capacity is available for the non-single family residential applications.

h. Side lot water line placement is discouraged. Where side lot water line placement is unavoidable, install water line in continuous steel casing

pipe, centered in a 20-foot wide dedicated water line easement. Extend the casing uninterrupted from right-of-way to right-of-way. No horizontal or vertical deflections are allowed. Construct encased water line of ductile iron or restrained joint bell and spigot pipe to prevent lateral movement. Provide and install casing spacers and end seals. This item shall only apply to publicly maintained lines.

B. Layout and size of all water lines shall be consistent with the overall layout and phasing plan of the City's water system. The overall water system shall be designed to maintain adequate operating pressure throughout the system.

C. Chlorination: All newly installed water lines shall have to pass bacteriological testing before being accepted for maintenance by the City of La Marque. All costs associated with the testing shall be the responsibility of the owner.

D. Pressure Testing: All newly installed water lines shall be flushed and pressure tested before being accepted for maintenance by the City of La Marque. All costs associated with the testing shall be the responsibility of the owner.

E. Material: Water lines shall be constructed of AWWA C-900 DR-18 or approved equal.

3.3.3 Location

A. Locate water lines within street rights-of-way.

B. Boulevard streets: Water lines shall not be located within the esplanade.

C. Locations within an easement: Locate water lines in the center of exclusive dedicated water line easements.

D. When a water line is placed parallel to any other proposed or existing utility line, other than a sanitary sewer, the water line shall have a minimum of 4 feet horizontal clearance from the outside wall of the existing utility to the outside wall of the proposed water line.

E. A minimum distance of 4 feet shall be maintained from the right-of-way or easement line to the outside edge of the water line.

3.3.4 Depth of Cover (See Table 3.1)

A. Provide the minimum depths of cover shown in Table 3.1 from the top of finished grade behind the curb for curb-and-gutter streets, or from the lowest elevation of the nearby ditch bottom for roadside ditch street sections, whichever is applicable.

B. Whenever possible, changes in grade or alignment to clear utilities or underground features should be accomplished by deflecting pipe joints. The maximum designed deflection shall be ½ of the manufacturer's allowable deflection. The use of regular bends for any change of grade shall not be allowed.

C. If a depth greater than 8 feet or less than 4 feet to the top of the pipe is proposed, use restrained joint pipe, ductile iron, or other comparable high hoop strength material pipe, and continue for all areas where the depth of cover exceeds 8 feet or is less than4 feet.

a. All transitions from ductile iron pipe to other water line material shall be constructed using electrically isolated flange joints.

b. Ductile iron or other comparable high hoop strength material pipe shall be pressure class 350.

Table 3.1 DEPTH OF COVER FOR WATER LINES		
SIZE OF LINE	**DEPTH OF COVER***	
	TOP-OF-CURB	**OPEN-DITCH**
8-INCH & SMALLER	4 FEET	4 FEET below ultimate flow line
12-INCH & LARGER	5 FEET	5 FEET below ultimate flow line

*When crossing easements whose owning or governing agency has stricter depth of cover criteria than that shown in Table 3.1, the more stringent of the two shall apply.

3.3.5 Appurtenances

A. Do not place appurtenances in pavement when the appurtenance would be covered in whole or in part by pavement. Gate valves may be placed in sidewalks provided that the top of the valve box is flush with the finished elevation.

B. All water system valves shall conform with AWWA standards and shall include:

a. Cast iron valve boxes are required on all valves less than or equal to 16 inches. Valve vaults are required on all valves 20 inches and larger.

b. All valves shall be sized to equal the size of the water main on which it is located.

C. Valves

a. Spacing – set at maximum distances along the water line as follows:

(1) 8" & Smaller – 1000 feet.

(2) 12” & Larger – 2000 feet.

(3) The total number of valves at any water line intersection shall equal the total number of lines leading out from the intersection point minus one.

(4) Refer to standard specifications for tapping sleeve & valve.

b. Location

(1) Valves must be located at street intersections along the street right-of-way lines projected across the water line where possible. Tapping sleeve and valves are excluded from this requirement.

(2) Isolate fire hydrants and flushing valves from the service main with a valve located in the fire hydrant or flushing valve lead. This valve should not be located in the slope or flow line of roadside ditches.

(3) Intermediate valves, not located on the projection of the right-of-way line, shall be located on lot lines or 5 feet from fire hydrants, but shall not be set in a driveway.

(4) Locate valves a minimum of 10 feet horizontally away (either direction) from any sanitary sewer crossing.

(5) Valves located near reducers shall be located on the smaller diameter pipe.

(6) All water mains shall be valved within the street right-of-way or dedicated water line easement. Valves shall not be placed under or within 2 feet of ultimate pavement, when it is known that the street will be widened in the future.

(7) Valves shall be placed at the end of all water mains that are to be extended in the future and the main shall be extended a minimum of two pipe joint past the valve.

(8) All valve shall be right close.

c. Valve Type

(1) 16” & smaller – Gate Valve

(2) 20” & larger – Butterfly Valve

D. Fire Hydrants

a. Spacing

(1) Single family residential development – 500 foot maximum spacing.

(2) All other development – 300 foot spacing.

b. Location in or along street right-of-way

(1) Locate fire hydrants primarily at or near street intersections.

(2) Locate fire hydrants at the end of a curb radius of a street intersection, 3 feet behind back of curb or projected future curb in a curb & gutter road construction.

(3) On streets with roadside ditches, set the fire hydrants within 5 feet of rights-of-way lines. Fire hydrant lead valves should not be located in the slopes or flow lines of ditches.

(4) Set fire hydrants not located at intersections or block corners at mid-lot or on lot lines, as extended to pavement, when located between right-of-way intersections. These locations may be adjusted 5 feet either way to avoid driveways or obstructions. In either case, do not locate fire hydrants closer than 5 feet from driveways.

(5) Fire hydrants are not allowed in esplanades of streets.

(6) On all Texas Department Transportation (TXDOT) rights-of-way, the fire hydrant and flushing valve set-backs from the edge of right-of-way shall adhere to TXDOT criteria.

c. Location of fire hydrants or flushing valves outside street rights-of-way and in public easements:

(1) City review and approval is required for all submitted locations of fire hydrants and flushing valves in all developments within the City of La Marque and its ETJ.

(2) Locate fire hydrant and flushing valves in protected, easily accessible areas behind curb lines.

(3) For fire hydrants or flushing valves that are located adjacent to water lines constructed in 10 foot wide water line easements, the fire hydrant or flushing valve shall be centered in a

minimum 10 foot by10 foot separate easement.

(4) For non-residential developments in the City of La Marque, provide isolation valves at each end of fire loops requiring on-site fire hydrants.

d. Fire hydrant leads shall be designed to have a minimum 4 foot bury where possible. Bends may be used on the fire hydrant branch to maintain a 4 foot bury or a 3 foot back of curb set-back.

e. Do not install fire hydrants within 10 feet vertically or horizontally of sanitary sewers and force mains.

E. Fittings

a. Fittings shall be Ductile Iron.

b. Use plugs with retention clamps and carrying the designation “plug and clamp.” Thrust blocking is required for dead-end lines that are plugged.

c. Concrete thrust blocking shall be required on all bends, tees, plugs, and combinations thereof.

d. All fittings and fire hydrants to be tied together with ¾ inch stainless steel all threads and I-bolts or with restrained joint fittings.

e. All water main joints shall be push on joints. Mechanical joints may be used for above ground water line installations.

f. All fittings are to be double wrapped in 6 mil plastic.

F. Ductile Iron Pipe

a. Ductile iron pipe shall be provided with polyethylene encasement. Provide minimum 2 wraps of 8-mil polyethylene, or

b. Polyethylene tube encasement shall conform with the minimum requirements of “Polyethylene Encasement for Gray and Ductile Cast Iron Piping for Water and other Liquids,” ANSI/AWWA C-105, current revision. Soils within the project shall be tested to adequately determine the requirements of the encasement. Appendix A of ANSI/AWWA C-105 shall be consulted where questions regarding soil conditions and encasement arise.

3.3.6 Water Meter Service

A. All water meters shall be installed by the City of La Marque.

B. A water meter permit must be obtained from the City of La Marque prior to installation.

C. Stub outs for future water service are not allowed except where part of a preapproved master plan, site plan development plan or tract development plan.

D. In new residential developments, water service lines shall be provided for all lots on the opposite side of the street. Services shall normally be at lot lines with a ¾ inch minimum size to serve a single lot and 1 inch minimum for two lots. Lines shall be SDR-9 polyethylene. The City of La Marque Building Inspector should be consulted to ensure the properly sized meter is selected for any proposed service.

E. Water service leads from the water main to the water meter shall be placed at a minimum 4 foot below final paving elevations.

F. Water Meter Service for Lines in or Along Rights-Of-Way

a. Meters 2 inches and smaller: Locate inside rights-of-way, water line easements, or in a minimum 5-foot by 5-foot exclusive water meter easement. Provide concrete meter boxes for meters located in sidewalks. Meters shall be located in areas with easy access and protection from traffic.

b. Meters 3 inches and larger: Locate in minimum 10'x20' separate water meter easement:

(1) Meters shall be located in areas with easy access and protection from traffic, and adjacent to rights-of-way whenever possible.
(2) Meters shall not be located in areas enclosed by fences.

c. Separate taps and service leads shall be designed for each meter. Meter, line size, and appurtenances shall conform to the latest edition of the Uniform Plumbing Code.

G. Meter boxes shall be located just within the public right-of-way if possible. Location of meters in the ditch of open ditch streets shall be avoided. Meter boxes shall be installed no more than 2 inches above grade.

H. For proposed multi-family developments, provide one master meter sized for the entire development. An above-ground, reduced pressure, zone-type backflow preventer shall be installed on the water line downstream from the meter.

I. For commercial developments with private on-site water mains for fire protection (i.e. not in a dedicated water line easement), provide fire service meters adjacent to the public right-of-way. If a dual (fire and domestic) feed is desired, both feeds shall be metered. An above-ground, reduced pressure, zone-type backflow preventer shall be installed on the water lines downstream from the meters.

3.3.7 Water Line Crossings within the City of La Marque

A. Public and private utility crossings other than sanitary sewer: Where a water line crosses another utility other than a sanitary sewer, a minimum of 12 inches of clearance must be maintained between the outside wall of the water line and the outside wall of the utility.

B. Stream or ditch crossings

a. Elevated crossings

(1) Water lines shall be steel, ductile iron pipe, or other comparable high hoop strength material and shall extend a minimum of 15 feet beyond the last bend or to the right of way line, whichever is greater.

(2) Elevated crossings are preferred to underground crossings.

(3) Crossings attached to vehicular bridges are preferred to separate elevated water line structures.

(4) For new vehicular bridge construction, include provisions for attaching a water line.

(a) Adequate structural capacity shall have been calculated and provided for, including considerations for pipe deflection and all applicable loading.

(b) Clearance for maintenance purposes above bent cap elevation shall be provided where elevated water lines are to be run under bridges.

(5) For new water line crossings near existing vehicular bridges, a separate elevated water line structure shall be constructed.

(6) Design all elevated crossings with the elevation of the bottom of the water line 2 feet above the 100-year water surface elevation in the channel.

(7) Create a high point in the elevated stream or ditch crossing and

provide an air release valve at that highest point of the water line.

(8) Provide sufficient span length to accommodate the cross section of future widening of the stream or ditch to ultimate cross section.

(9) Base the columns' support designs on soil capacity, spacing, loading, and all pertinent structural requirements.

(10) Spacing of supports shall consider effect of support on channel hydraulics and be subject to city approval.

(11) Provide pedestrian pipe guards on elevated crossings.

b. Underground Crossings

(1) Provide a minimum 5 foot clearance from the top of the pipeline to the ultimate flow line of the ditch.

(2) Provide sufficient length to exceed the ultimate future development of the stream or ditch.

(3) Water lines shall be Class 150, C-900 or ductile iron pipe and shall extend a minimum of 40 feet beyond the last bend or to the right of way line, whichever is greater.

(4) Restrained Joints shall be used.

(5) Locate valves on each side of the crossing.

(6) Where other agencies have review authority or jurisdiction and have different underground crossing requirements, the more stringent of the two shall apply.

C. State Highway and County Road Crossings

a. Extend steel casing pipe from 5' on each side beyond the edge of pavement.

b. The approval of the design by the appropriate governmental agency shall be demonstrated to the City of La Marque before plans will be approved.

c. Where additional right-of-way has been acquired for future widening, the casing shall extend to the future right-of-way line.

D. Railroad Crossings

a. For main line and spur line railroad crossings, the water line shall meet the requirements of the governing agency and such requirements shall be followed from 5 feet beyond each right-of-way line and across the right-of-way itself. Any deviation must be approved by the railroad companies.

b. Where there is no railroad but a railroad owned easement or right-of-way, as a minimum, extend a steel casing from right-of-way to right-of-way line.

c. The approval of the design concept by the railroad involved must be obtained and demonstrated to the City of La Marque before plans will be approved.

E. Additional Requirements

a. Use isolated flange joints for transitions between two dissimilar metallic pipes. Isolate water lines from casing with spacers and supports.

b. The carrier pipeline shall extend a minimum of 1-foot beyond the end of the casing to allow flanged joints to be constructed if necessary.

F. Oil and Gas Pipeline Crossings

Use PVC pipe when crossing a non-service transmission pipeline regardless of depth. All non-service transmission pipeline crossings must have the approval of the company whose lines are being crossed. Maintain a minimum 2 foot vertical separation between the pipeline and the water line.

G. Fire flow Water line Loops within Non-Residential Developments

For non-residential developments inside the City of La Marque requesting on-site water mains, comply with the following requirements to allow maintenance and future repair operations if the City of La Marque will be the entity maintaining the water main:

a. Avoid laying any new water lines under proposed or existing pavement, but where unavoidable, provide minimum 10 foot expansion joints (free joints) in the easement over the water line.

b. Fire flow water line loops within non-residential developments that are to be maintained by the City of La Marque shall be placed in a 20-foot wide water line easement that shall be dedicated to the City.

c. There shall be no structures or equipment pads constructed over a publicly maintained water line.

3.3.8 Auger Construction: Use the following general criteria for establishing auger, bore and jack, or microtunneling sections when site conditions require their use. Identify the sections on the construction drawings.

A. Improved streets – Use auger or microtunneling construction to cross a street regardless of surface. Auger or microtunneling length shall be computed as roadway width at the proposed bore location plus a minimum of 10 feet to either side of roadway.

B. Driveways – Use auger or microtunneling construction to cross improved driveways. Bore and jack, auger or microtunneling length shall be a minimum of the driveway's width.

3.3.9 Circulation and Flushing for Water Quality: The layout of the water distribution system shall provide for maximum circulation of water.

A. Provide a source of fresh water at each end or at multiple points of a subdivision or development. Provide ways to create circulation and place valves and fire hydrants to allow simple flushing of lines.

B. Where stubs are provided for future extensions, isolate the stubs with a valve and no service connections will be allowed beyond the valve before the line is extended. Place two full joint of pipe between the valve and the plug.

3.3.10 New Water Lines Constructed Near Sanitary Sewers, Force Mains and Manholes

A. New Water Lines Parallel to Sanitary Sewer and Force Mains: Locate water lines a minimum of 10 feet horizontally, outside wall to outside wall, when parallel to sanitary sewers and force mains. Use the following procedure when site conditions prohibit achieving 10 feet of separation:

a. When a new water line is to parallel an existing sanitary sewer force main or gravity sewer and the 10 foot minimum separation cannot be achieved, the existing sanitary sewer shall be replaced with lined ductile iron pipe, SDR-26 with pressure gaskets, or PVC C-900 150 psi pipe or better and equipped with pressure type joints.

b. The water lines and sanitary sewer shall be separated by a minimum vertical distance of 2 feet and at least 4 feet horizontally (per 30 TAC 290.44) measured between the nearest outside walls of the pipes, where the water line shall always be located above the sewer.

B. New Water Lines Crossing New and Existing Sanitary Sewers and Force Mains

a. No protection is required if the sanitary sewer is 10 feet below the water line.

b. Use the protective requirements given in Table 3.2 and 3.3 for sanitary sewer crossings not 10 feet below the water line.

C. Sanitary Sewer Manholes: Provide a minimum 10 foot horizontal clearance from outside wall of existing or proposed manholes, make manholes and connecting sewers watertight and test for leakage. If a 10 foot clearance cannot be obtained, the water line may be located closer to the manhole when prior approval has been obtained from the City Engineer by using one of the procedures below; however, in no case shall the clearance be less than 4 feet.

a. The City of La Marque may require the water line to be encased when site conditions dictate or when the water line is within 5 feet of a manhole. The carrier pipe shall be a minimum of 1 joint of 150 psi pressure class pipe at least 20 feet long and two nominal sizes larger than the water conveyance pipe.

b. The water line may be augured, bore & jacked, or microtunneled past the manhole with at least one 20 foot section of 150 psi pressure pipe installed centered about the existing sanitary manhole with pressure grouting of the annular space using a bentonite/clay mixture or other commercial grouts.

Table 3.2 WATER LINE – SANITARY SEWER CROSSINGS

PRIMARY CONDITION	**PROPOSED WATER EXISTING SANITARY**				**PROPOSED WATER PROPOSED SANITARY OR EXISTING WATER PROPOSED SANITARY**			
SECONDARY CONDITIONS	WATER OVER SANITARY		WATER UNDER SANITARY		WATER OVER SANITARY		WATER UNDER SANITARY	
IF THE CLEARANCE IS	Less than 2’	Greater than 2’ but less than 10’	Less than 2’	Greater than 2’ but less than 10’	Less than 2’	Greater than 2’ but less than 10’	Less than 2’	Greater than 2’ but less than 10’
*Protection Requirement	1	2	3	4a or 4b	5	6a	3	6b & 6c

*PROTECTION REQUIREMENTS FOR SANITARY SEWER CROSSINGS (All clearances shall be measured from outside wall to outside wall)

1. One 20-foot joint of C-900 or C-905 PVC, 150 psi centered over sanitary sewer; 12-inch minimum clearance.
2. If no evidence of sanitary sewer leakage, center one joint of water line over sanitary sewer; 24 inch minimum clearance. If the sewer line is leaking, the sewer line shall be replaced with 150 psi lined ductile iron pipe or other approved pressure pipe with appropriate adapters on all portions of the sanitary sewer within 10 feet of the water line.
3. Not allowed.
4. a. Auger, bore & jack or microtunnel 10 feet minimum each side of sanitary sewer. Place one 20-foot joint of C-900 or C905, 150 psi, centered under sanitary sewer. Fill bore hole with bentonite/clay mixture or grout; 2 foot minimum clearance. OR
   b. Replace the existing sanitary sewer with 150 psi lined ductile iron pipe, C-900 or other approved pressure pipe with appropriate adapters on all portions of the sanitary sewer within 10 feet of the water line.
5. Minimum 20 foot joint of sanitary sewer, 150 psi lined ductile iron pipe, C-900 or other approved pressure pipe centered at the water line, 6 inch minimum clearance. Also center an 20 foot joint of water line over the sanitary sewer line. The sanitary sewer line shall be embedded in cement stabilized sand for one pipe segment plus 1 foot beyond each joint.
6. a. Center a minimum 20 foot joint of sanitary sewer, 150 psi, lined ductile iron pipe, C-900 or other approved pressure pipe on water line.
   b. Use cement stabilized sand backfill for all portions of the sewer within 10 feet of the water line, as measured perpendicularly from any point on the water pipe to the wastewater pipe (minimum 2.5 sacks cement per cubic yard of sand). The cement-stabilized sand bedding shall start at a point 6 inches below the bottom of the sanitary sewer to 6 inches above the top of the sanitary sewer and one quarter of the pipe diameter on either side of the sewer.
   c. Center a minimum 20 foot joint of water line on the sanitary sewer line.

Table 3.3 PROTECTION REQUIREMENTS AT WATER LINE – FORCE MAIN CROSSINGS

PRIMARY CONDITION	**PROPOSED WATER EXISTING FORCE MAIN**				**PROPOSED WATER PROPOSED FORCE MAIN OR EXISTING WATER PROPOSED FORCE MAIN**			
SECONDARY CONDITIONS	WATER OVER FORCE MAIN		WATER UNDER FORCE MAIN		WATER OVER FORCE MAIN		WATER UNDER FORCE MAIN	
IF THE CLEARANCE IS	Less than 2’	Greater than 2’ but less than 10’	Less than 2’	Greater than 2’ but less than 10’	Less than 2’	Greater than 2’ but less than 10’	Less than 2’	Greater than 2’ but less than 10’
*Protection Requirement	1	2	3	4a or 4b	5	6a	3	6a & 6b

*PROTECTION REQUIREMENTS FOR FORCE MAIN CROSSINGS (All clearances shall be measured from outside wall to outside wall)

1. Construct water line with a 20-foot ductile iron section with all related appurtenances centered above the force main; 6-inch minimum clearance.
2. Construct water line with one 20 foot joint of C-900 or C-905 150 psi PVC centered above the force main.
3. Not allowed.
4. a. Auger, bore & jack or microtunnel 10 feet minimum each side of force main. Place one 20-foot joint of C-900 or C905, 150 psi, centered under sanitary sewer. Fill bore hole with bentonite/clay mixture or grout; 2 foot minimum clearance. OR
   b. Replace the existing force main with 150 psi lined ductile iron pipe with appropriate adapters on all portions of the force main within 10 feet of the water line.
5. Center a minimum 20 foot joint of force main, 150 psi lined ductile iron pipe under water line and use cement-stabilized sand backfill for all portions of the sanitary sewer force main with 10 feet of the water line as measured perpendicularly from any point on the water pipe to the sanitary sewer force main pipe (minimum 2.5 sacks cement per cubic yard of sand). The cement-stabilized sand bedding shall be from a point 6 inches below the bottom of the sanitary sewer force main to 6 inches above the top of the sanitary sewer force main and one quarter of the pipe diameter of the sanitary sewer force main on either side of the sanitary sewer force main.
6. Minimum 20 foot of sanitary sewer force main, 150 psi lined ductile iron pipe centered at the water line.

3.4 QUALITY ASSURANCE

3.4.1 Prepare calculations and drawings prepared under the supervision of a Texas Professional Engineer trained and licensed under the disciplines required by the nature of the drawings. The final design drawings, must be sealed, signed and dated by the Professional Engineer responsible for development of the drawings.

3.4.2 For Elevated Stream and Ditch Crossings: Prepare design calculations for support columns and column spacing.

3.5 RECLAIMED WATER

3.5.1 Reclaimed water facilities shall meet or exceed the requirements of the TCEQ, as per 30 TAC Chapter 321, Subchapter P.

CITY OF LA MARQUE

CHAPTER 4

SANITARY SEWER DESIGN CRITERIA

CHAPTER 4 – SANITARY SEWER DESIGN

4.1 SANITARY SEWER DESIGN GENERAL

4.1.1 Criteria for the design of sanitary sewer service and collection lines are herein established. All sanitary sewer lines constructed within the City of La Marque or its Extraterritorial Jurisdiction (ETJ) shall follow these criteria and be in agreement with the City of La Marque Comprehensive Plan.

4.1.2 Design, construction and sizing of all sanitary sewer systems shall meet or exceed the requirements of the Texas Commission of Environmental Quality (TCEQ) as per 30 TAC Chapter 217.

4.1.3 The "City of La Marque" for the purposes of these criteria shall consist of all land within the city limits, and land located within the City's ETJ.

4.1.4 Design and construction shall conform to the City of La Marque construction details and construction specifications.

4.1.5 This chapter addresses the design of the sanitary sewer systems to be located within the public right-of-way or a dedicated public easement. Sanitary sewers located on private property that are not in a dedicated public easement shall not be considered part of the publicly maintained sanitary sewer system.

4.1.6 The approving authority for the City of La Marque with respect to the sanitary sewer system design criteria shall be the City Engineer.

4.2 DEFINITIONS

4.2.1 Public Sanitary Sewer - Sewers that are maintained by the City of La Marque and located in dedicated public easements or street rights-of-way, including pre-existing sanitary sewer lines that are serving the public at the time of the adoption of these regulations, and new public sanitary sewers that are installed in accordance with these standards.

4.2.2 Private Sewer – Sewers that are constructed and maintained by a private entity. Private sewers shall be located on private property. Private sewers are subject to the design and construction requirements of the Plumbing Code.

4.2.3 Sanitary Sewer Main – A sewer which receives the flow from one or more lateral sewers.

4.2.4 Lateral Sewer – A sewer running laterally down a street, alley or easement which receives flow from abutting property.

4.2.5 Service Lead – A sewer which branches off of a public sewer and extends to the

limits of the public right-of-way. It shall be construed as having reference to a public sewer branching off from a main or lateral sewer to serve one or more houses, single family lots, or other types of small land tracts situated in the same block, but not directly adjacent to the main or lateral sewer. A service lead shall never exceed 100 feet in perpendicular length from the intersecting sewer main or lateral. If the sewer is designed to serve more than two houses, or the equivalent of two single family residences along a street, a lateral sewer as defined above shall be constructed.

4.2.6 Stack - A riser pipe constructed on main or lateral sewers which are deeper than 6 feet to facilitate construction of service leads or service connections.

4.2.7 Force Main - A pressure-rated conduit (i.e. ductile iron pipe, pressure-rated PVC, etc.) which conveys wastewater from a pump station to a discharge point.

4.3 DESIGN REQUIREMENTS

4.3.1 Easements: Sanitary Sewer Easements – the following minimum easements are required when facilities are not located within public street rights-of-way:

A. The width of all exclusive sanitary sewer easements shall be equal to the depth of the sewer from finished grade plus two (2) pipe diameters, rounded up to the nearest multiple of 5-feet. Sewer shall be located in the center of the easement. The minimum width of a sanitary easement shall be twenty (20’) when not adjacent to public street rights-of-way.

B. Exclusive sanitary sewer easement adjoining a public right-of-way shall be a minimum of ten feet (10’).

C. Exclusive easements for force mains of all sizes shall have a minimum width easement of fifteen feet (15’) for a single force main where the force main is not located adjacent to a public right-of-way. Where the force main is located in an easement adjacent to public rights-of-way, the force main may be located at the center of a ten-foot (10’) easement. Where the force main is located less than five feet (5’) from the right-of-way line within the public right-of-way, the minimum easement width shall be ten feet (10’) adjacent to the right-of-way.

D. Combined storm and sanitary sewer easements shall have minimum widths as required in Section 5.3.1 for storm sewer easements. Additionally, the sanitary sewer main, trunk or force main shall be located such that the centerline of the pipe shall be located in at least half the width of the easement, as defined in Section 5.3.1.C, but not less than seven and one-half feet (7.5’), from the edge of the easement.

E. For combined storm and sanitary sewer easements located adjacent to public rights-of-way where the sanitary sewer is located along the outside of the

easement, the centerline of the sanitary sewer pipe shall be located in at least half the width of the easement defined in Section 5.3.1.C, but not less than seven and one-half feet (7.5') from the outside edge of the easement.

F. Where sanitary sewers or force mains are installed in easements separated from public rights-of-way by other private or utility company easements, the sanitary sewer easement should be extended along or across the private utility company easement to provide access for maintenance of the sewer or force main.

4.3.2 Drawings to be Furnished

A. Before any sanitary sewer main or lateral sewer is constructed and before the City will approve any proposed sanitary sewer for construction, plan-and-profile sheets of the proposed sanitary sewer shall be prepared and submitted to the City for approval.

B. These drawings shall become the property of the City of La Marque.

C. Drawings shall include at a minimum layout sheets with contours, plan-and-profile sheets, and details sheets for special items.

D. The construction drawings shall show at a minimum the exact location of the proposed sanitary sewer in the right-of-way, alley, or public easement with respect to the edge of the particular right-of-way, survey base line, any nearby utilities, 100-year floodplain elevation within the project area, major landscaping, and other structures (above ground and below ground) within the construction site.

4.3.3 Sanitary Sewer Mains and Lateral Sewers

A. Sanitary sewers shall be identified by number, letter, or other identification as shown on the sanitary sewer layout sheet and manholes shall be identified by letter or number.

B. Sanitary sewers must be shown in both plan and profile views.

C. The profile shall show other underground and surface utilities and facilities, both in parallel and at crossings; the size, grade, and type of pipe of the proposed line, the elevations of the proposed line to the hundredths of a foot at manholes, changes of grade and clean outs where allowed; and the proposed finished grade over the sewer with elevations. Where proposed fill or cut is contemplated, the proposed new natural ground line should be shown as a separate line from the pre-existing natural ground line. Type of pipe, bedding and backfill shall comply with City of La Marque standard specifications and standard details, or if not available, shall comply with the City of Houston standard specifications and standard details.

D. The construction drawings shall show the existing natural ground line at either the right-of-way or edge of easement when the proposed sanitary sewer is to be placed:

a. Between the existing pavement and the right-of-way line.

b. Between existing pavement and an existing or proposed easement.

E. When a sanitary sewer is located under existing pavement, then the finished elevations of the pavement shall be shown on the construction drawings.

4.3.4 Plan and Profile Required for Sewer Mains

A. Sanitary sewer overall layout sheets for single family residential subdivisions should use a standard engineering scale large enough to show the entire project on preferably one, but no more than two, standard 24”x36” sheets. In all cases, the following information must be shown on the layout.

a. All easements containing or buffering sanitary sewers, including corresponding recording information, if recorded by separate instrument.

b. Sanitary sewer sizes are shown at points of size change and between all manholes.

c. All manhole locations.

d. The sanitary sewer alignment shall accurately reflect in the plan and profile sheets the location of the sanitary sewer as shown on the detailed plan view. Alignment shall be stationed with 100-ft. stations.

e. Service leads that cross street pavement or serve adjacent property are to be shown on the overall layout.

f. The number, size, and layout of the lots depicted on both the overall sanitary sewer layout sheet and the individual plan-and-profile sheets shall match the number and size of the lots depicted on the final plat after recordation.

g. The direction of flow for existing and proposed sanitary sewers shall be shown on the overall sanitary sewer layout sheet.

h. The location of the proposed sanitary sewer within either the public right-of-way or a dedicated public easement.

i. The overall sanitary sewer layout sheet shall show the area, in acres or in number of lots plus any acreage outside the project area, which

the proposed sewer is designed to serve. Include a vicinity map which references the project or lots to nearby major thoroughfares.

B. Commercial sanitary sewer layouts shall follow the same overall layout sheet format.

C. Horizontal and vertical scales for the detailed plan-and-profile views shall be \ confined to standard engineering scales.

D. The plan view shall show, at a minimum, all of the following information for the project area:

a. Topographical features.

b. Stationing for the proposed sewers.

c. All existing utilities including gas, power, telephone, fiber optic, cable , etc.

d. Any significant landscaping or other structures which might impact construction or construction-related activities.

e. The width and type of existing and/or proposed easements.

f. Proposed service leads.

g. The limits of any proposed bore and jack, microtunnel, or auger operations.

h. Locations where pressure pipe is to be installed for water line crossings.

i. The proposed sanitary sewer with pipe diameter, length, material type, and grade clearly labeled.

E. The profile view shall show, at a minimum, all of the following information for the project area:

a. Underground and surface utilities/facilities which are either parallel to the proposed sanitary sewer or cross the proposed sanitary sewer within the construction site.

b. The proposed sanitary sewer's diameter, grade, length, and material type for each section between manholes. This shall be labeled on every applicable page and identified as "proposed."

c. The flowline elevation and centerline station for every sanitary sewer at every manhole.

d. The top of rim elevation of affected existing and proposed manholes.

e. The flowline elevation and centerline station at each sheet break.

f. The type of pipe bedding and backfill shall comply with City of La Marque standard specifications and standard details where applicable.

g. The finished grade for proposed and existing pavement. Where cut and fill are proposed, the proposed new natural ground line should be shown as a separate line from the existing natural ground line.

h. The existing natural ground line at the centerline of the sanitary sewer when a sewer is to be placed between the edge of pavement and the public right-of-way. In the cases where roadside ditches exist, the centerline elevations of the roadside ditch shall be shown.

i. The existing ground line at the centerline of the proposed sanitary sewer where a sanitary sewer is to be placed within an existing easement. Show any proposed cut and fill as described above.

j. The limits of any proposed bore and jack, microtunnel, or auger operations.

k. Locations and limits of where pressure pipe is to be installed for water line crossings.

l. The location of special backfill and any proposed stacks shall be identified by stations indicated on the design plans.

m. Avoid vertical breaks in profiles. Use alternate scale for all profile sheets if all of proposed sanitary sewer cannot be shown on any one profile section for the station run indicated in plan view for that sheet.

F. All construction drawings for new sanitary sewers shall show the proposed location, by stations and offsets, of all service leads, and service connection risers.

4.3.5 Service Lead Construction for Residential and Commercial Developments

A. Space the location of service leads so as to limit the number of service lead taps to the lateral sewer or sewer main. Service leads should be spaced at every other property line between two adjoining residential lots unless there is an odd number of lots. The City reserves the right to direct the engineer to relocate any proposed service lead upon reviewing any submitted plans. A single 6-inch service lead located at the property line between two adjoining residential lots would serve two single-family residences with a wye placed at

the end of the service lead. The wyes shall be located at the private property line.

a. Near side double sewer service leads shall not exceed 5 feet in length, shall terminate at the property line, and shall be located within the public right-of-way or public easement.

b. In cases where the sanitary trunk main is further than 5 feet from edge of the right-of-way, a single 6-inch service shall be run from the sewer main to the edge of the right-of-way whereupon a wye shall be placed as described above. This shall apply to residential sanitary service leads and not to commercial service taps.

B. Any far side service lead of more than 150 feet perpendicular to the street right-of-way shall be treated as a lateral sewer.

C. Service leads for single-family developments should connect to the manhole whenever practical. Commercial or industrial service leads expected to discharge more than 5000 gallons-per-day shall discharge directly into a proposed or existing sanitary sewer manhole. Where the flowline of the service lead is 30 inches or greater above the flow line of the manhole, provide a standard drop manhole.

a. Service leads shall be provided to serve each lot or parcel within a proposed residential, commercial or industrial development. The detail for a typical near-side and far-side service leads shall be included with the construction drawings.

b. Service leads shall be a minimum of 6 inches in diameter where two or more lots or parcels are served. If the perpendicular length of a service lead exceeds 100 feet, it shall be considered a lateral sewer, the minimum diameter shall be 8 inches, it shall end in a manhole, and a manhole shall be utilized for connection to the public sewer.

c. In such cases where a service lead is proposed to run diagonally across the street, prior approval from the City Engineer must be obtained.

d. Service leads with a diameter of 6 inches shall utilize full body fittings be they extruded or factory-fabricated for connection to a proposed public sewer or an approved saddle-type connector for connection to an existing public sewer.

e. PVC saddle-type connectors with gasket and stainless steel straps shall be installed with the stub oriented 45 degrees from the springline. Tees may be oriented the in the same manner.

f. The service lead shall be placed so as to minimize the use of bends as

site conditions permit.

g. For existing residential lots (which are not served in accordance with these guidelines) that need a service lead, if the distance to the nearest existing sanitary sewer is less than 60 feet, the service lead shall be a 6 inch service tap if only one lot or parcel is to be served. Commercial and industrial lots and parcels shall have a minimum 6 inch service tap under the same conditions.

h. The location where the service lead or wye meets the property line shall be shown on the plans and as-builts, and marked in the field as shown on the standard details. There shall be a riser placed where the service lead meets the property line so that the service lead stub-out can be recovered at the time that the connection to the service lead is made.

i. All service leads shall be installed at the time of the construction of the sanitary sewer in new residential subdivisions.

4.3.6 General Requirements

A. A licensed plumber shall be responsible for connecting private residential sanitary sewer service to the public sanitary sewer system, to wyes and/or tees or to lateral sewers as indicated on the plans. Said licensed plumber shall be responsible for a properly installed and watertight private residential service connection.

B. Commercial service connections to the public sanitary sewer shall be made at manholes.

C. Materials and construction shall conform to the City of La Marque Standard Specifications and Standard Details where applicable.

D. All constructed sanitary sewer lines shall be air tested for leaks and a mandrel pulled for structural defects. All sanitary sewer testing shall comply with or exceed the procedures and qualifications listed in Texas Administrative Code, Chapter 217.57. Manhole testing shall comply with or exceed the procedures and qualifications listed in Texas Administrative Code, Chapter 217.58.

E. All public sanitary sewers and service leads shall have bedding and backfill that shall comply with or exceed City of La Marque Standard Specifications and Details. Those sanitary sewers that are bore and jacked, microtunneled, augured, or encased in a steel pipe may require special bedding and backfill.

F. Backfill shall be in accordance with Standard Details.

G. Public sanitary sewers and force mains shall be located in either the public right-of-way or public easements. Side lot and back lot easements are not allowed. The location of the sanitary sewer within a dedicated public easement shall be along the centerline of the proposed public easement or as close to the centerline as can be designed. In those instances where the public easement is adjacent to the public right-of-way, the lateral location of the sanitary sewer shall be at the discretion of the Design Engineer with City approval.

H. The drawings of the sanitary sewer shall show the location of any existing pipe or duct that might interfere with the construction of the sanitary sewer and call to the attention of the City any known obstacles that might be encountered in constructing the sanitary sewer in any location under consideration. The Professional Engineer of Record shall determine the existence of pipes, ducts, obstacles and other utilities (i.e. gas, telephone, electric, fiber optic, cable, etc.) from a visual survey on the ground plus research of the public records and private records when available.

I. Sanitary sewers within the City of La Marque's jurisdiction shall be designed and installed at such a size and depth as to allow for orderly expansion of the system, so as to avoid duplication in the future.

J. Sanitary sewers shall be separated from water lines by a minimum of 9 feet of horizontal clearance. See Chapter 3 Water System Design for water and sanitary sewer crossing design criteria.

K. Sanitary sewers shall be separated from storm sewer lines by a minimum of 4 feet of horizontal clearance and the storm sewer line shall be above the sanitary line where possible.

L. For sanitary sewers crossing utilities other than water or storm sewer (i.e. gas, telephone, electric, fiber optic, cable, etc.) a minimum of 12 inches of horizontal clearance shall be maintained as measured from outside wall to outside wall.

4.3.7 Line Size

A. The minimum pipe diameter for a public sanitary sewer main or lateral sewer other than a service lead shall be 8 inches.

B. Service leads 6 inches in diameter shall not serve more than the equivalent of 2 single family lots or other equivalent types of small land tracts. Four inch service leads are not allowed.

C. Service leads for single family residential lots shall have a recommended grade of 0.70% and a minimum grade of 0.50% for a 6 inch line.

D. For commercial service leads such as street bores, the required size of the line shall be established from the plumbing drawings. Commercial, industrial, and office areas shall be designed for an average daily flow that can be anticipated from the contributing service area.

E. Commercial sewer service leads shall be 6 inch pipe or larger. A single 6 inch commercial service connection shall not serve more than one commercial lot or parcel. Four inch service leads for commercial developments are not allowed.

F. Sewer mains and lateral sewers shall meet at a manhole. Sewer mains and lateral sewers shall end in a manhole.

G. The City Engineer shall have final review and approval authority as to the size and depths required for sanitary sewer mains and lateral sewers.

4.3.8 Line Depth

A. The sanitary sewer should be laid with the top of the pipe a minimum of 4 feet below the surface of the natural ground or finished grade.

B. Sanitary sewers laid in street rights-of-way with a curb and gutter section shall have a minimum cover of 4 feet from the top of the pipe to the flowline elevation of the gutter in the street at all locations. The Professional Engineer of Record shall account for any anticipated future sanitary sewer extension whereas the future sanitary sewer extension shall have a minimum 4 feet of cover from the top of the pipe to the flowline of the gutter of the street. The Professional Engineer of Record shall adjust the depth of the proposed pipe accordingly. The City of La Marque reserves the right to require greater depth where the need is perceived by the City.

C. Sanitary sewers laid in street rights-of-way with crowned roads and roadside ditches shall have a minimum depth of 5 feet from the crown of the road to the top of the pipe and an absolute minimum cover of 4 feet below the flowline of a roadside ditch when non- rigid pipes of low hoop strength are used. The City of La Marque shall have final determination on any deviation from these criteria.

D. Where the cover over the pipe is less than 4 feet, the sanitary sewer shall be laid with Class 150 pressure pipe, steel pipe or ductile iron pipe. Class 150 pressure pipe must be backfill with cement stabilized sand in accordance with the Standard Details. Ductile iron pipe may be used but shall be lined with either a polyethylene or polyurethane coating with manufacturer recommendation and applied by the pipe manufacturer. The minimum liner thickness shall be 40 mil. Other rigid pipe or pressure pipe will be considered for approval on a case-by-case basis.

E. Maximum depth for 8-12 inch diameter collection lines shall be 20 feet from average ground surface to sanitary sewer invert. Depths greater than 20 feet shall require the use of Class 150 pressure pipe with backfill in accordance with the Standard Details. Ductile iron pipe may be used but shall be lined with either a polyethylene or polyurethane coating with manufacturer recommendation and applied by the pipe manufacturer. The minimum liner thickness shall be 40 mil.

4.3.9 Line Grades

A. The following table lists the minimum grade for 6-inch to 27-inch diameter public sanitary sewers. The recommended velocity for a sanitary sewer flowing full shall be 2.3 feet per second (fps). The minimum velocity for a sanitary sewer flowing full shall be 2.0 feet per second (fps). The maximum recommended grade shall be calculated by the Professional Engineer of Record for a maximum velocity of 4.5 fps based on a Manning equation for full flow with the Manning's "n" equal to 0.013.

PIPE SIZE (I.D., In.)	MINIMUM GRADE (PERCENT)
6	0.70
8	0.44
10	0.33
12	0.26
15	0.19
18	0.15
21	0.13
24	0.11
27	0.087

B. For sewers larger than 27 inches in diameter, the Professional Engineer of Record shall determine the appropriate grade utilizing Manning's Formula, using a minimum full pipe velocity of 2.fps.

4.3.10 Gravity sanitary sewers shall be laid in straight alignment with uniform grade between manholes. Non-uniform grade change without the use of manholes at the grade change is not allowed.

4.3.11 Manholes

A. Type: Manholes shall be precast concrete manholes in accordance with the standard detail. Some sewer configurations may require the use of Corrosion Resistant Manholes with specific approval by the City. It shall be the responsibility of the Professional Engineer of Record to ensure that the precast manholes conform to the latest ASTM requirements. Manhole covers

shall have the City of La Marque logo on them. All manholes shall be installed with stainless steel or polyethylene manhole inserts with 1/8 inch vents and strap handles.

B. Location: Manholes shall be placed at changes in alignment, changes in grade, changes in size of sanitary sewers, at the intersection of sanitary sewers, junction points, and either at street, alley, or easement intersections.

a. The maximum distance between manholes shall be determined from the following table for 8 inch to 48 inch pipe diameters. Spacing for manholes on sewer mains with diameters larger than 48 inches shall be recommended on an individual basis by the Professional Engineer of Record subject to City of La Marque approval.

PIPE DIAMETER IN INCHES	MANHOLE MAXIMUM SPACING IN FEET
8-15	400
18-48	800
>48	Per PE of Record, subject to City of La Marque Approval

b. Place manholes at the dead-end of sewer mains and lateral sewers.

c. Manhole covers shall be cast iron, traffic bearing type ring and cover.

d. Criteria for Manhole Junctures

(1) Connections between public sanitary sewers and the manhole shall adhere to the following criteria.

(a) The elevation of the crown of the discharging sanitary sewer shall match the elevation of the crown of the receiving sanitary sewer for both equal and unequal pipe diameters.

(b) Drop manholes are allowed. A drop connection or drop manhole is required when the difference in elevation between the effluent flowline and the influent flowline is greater than 30 inches.

4.3.12 Manholes should be located as to minimize or eliminate the inflow of stormwater into the sanitary sewer. The top of manhole rim shall be set a minimum of 3 inches above the surrounding finished grade when the manhole is not in a paved roadway. Sealed manholes are required on all newly constructed manholes within the 100-year flood plain. Under no circumstances shall the elevation of the top of rim of a sanitary sewer manhole be below the 100-year base flood elevation for the area in

which it is built.

4.3.13 Manholes shall be constructed in accordance with the Standard Details where applicable. All manholes shall include rubber seals precast into the manhole for pipe inserts (no cement or grout). Precast manholes shall incorporate a boot-type connector for sanitary sewer diameters up to 24 inches. For sanitary sewer diameters greater than 24 inches, utilize either the boot-type connector (if available) or an integral gasket.

4.3.14 Steps in manholes are not allowed.

4.3.15 All manhole adjustments shall be made with precast concrete rings when an additional precast vertical section is too large. No brick manholes are allowed.

4.3.16 All manholes shall be tested by the construction contractor and results provided to the City of La Marque before being accepted by the city for maintenance. The City of La Marque reserves the right to require retesting of manholes if there is reason to question the results. All manhole testing shall comply with or exceed the procedures and qualifications listed in Texas Administrative Code, Chapter 217.58.

4.3.17 Lift Stations

A. Lift station design and construction drawings as well as design requirements and pertinent data shall be sealed by a Professional Engineer registered in the State of Texas and submitted with the construction drawings for review by the City. Lift stations shall comply with Texas Administrative Code, Chapter 217.59-217.63.

B. Lift Stations should be considered only when a gravity system cannot be achieved from both an engineering and an economic standpoint. Lift stations should only be considered with prior approval from the City of La Marque or where the lift station is designed to be temporary in nature.

C. Operation and maintenance should be considered in the design of the lift station and the location of the lift station.

D. Wet Wells

a. Provide adequate clearance between pumps so as to easily facilitate retrieval of a pump (refer to manufacturer's recommendations). A minimum of 2 feet of clearance shall be provided between pumps and walls.

b. Wet well working volume shall be sized to allow for the following minimum pump cycle times:

Pump Horsepower (largest pump)	Minimum Cycle Time (minutes)
Less than 50	6
50-100	10
Over 100	15

c. Tie reinforcing steel in lift station base to walls to provide watertight wet well (includes caisson construction).

d. The below grade wet well and valve vaults are subject to buoyant forces. Include buoyancy calculations to ensure that the structure weight (include walls and slab only) will be sufficient to offset these forces.

E. Lift Station Site

a. Site shall have a minimum size of 50 feet by 50 feet.

b. Site access shall be provided by a minimum 15-foot wide public right-of-way or permanent access easement.

c. Provide a 14-foot wide asphalt or concrete vehicular access road to the site. Drive shall terminate adjacent to the station with a parking space such that a truck mounted hoist can remove pumps. Lift Station located within or adjacent to a residential subdivision shall be required to have a concrete driveway.

d. Wet well or dry well structures shall be a minimum of 12 feet from outside walls of structure to site boundary fencing.

e. Indicate method of drainage of site on site plan. Internal drainage, sheet flow, and valley gutter driveways are acceptable. Drain to street or storm sewer, never onto adjacent private property.

F. Site Security

a. Lift station shall be enclosed in a building or fenced in such a way to deter unauthorized operation, vandalism, or terrorism.

b. Fence shall be constructed of masonry, CCA cedar, or heart redwood, with steel posts set in concrete. Fence shall be at minimum 8 feet high.

c. Fence shall be located completely inside the site boundary.

G. The design of the lift station, including all electrical and mechanical equipment, must be designed to withstand and operate during a 100-year

flood event. The lift station's control panel shall be located a minimum of 2 feet above the nearest base flood elevation. The top of concrete of the lift station's wet well shall be a minimum of 2 feet above the nearest base flood elevation.

H. Pumps shall be sized to operate at optimum efficiency. Minimum acceptable efficiency at the operating point shall be 60%. Include pump and system head curves and pump information summary chart on plans.

I. A peak factor of 4 shall be used for Lift Station design.

J. Low water level shall be at least 6 inches above impeller, higher if required by manufacturer. Complete immersion of submersible pump motor at low water level is preferred.

K. Vent pipe shall be 8 inches minimum diameter and shall be equipped with odor control system.

L. Nuts, bolts, chains, and all other metal components within wet well shall be stainless steel, not carbon steel.

M. Dual stainless steel guide rails (or other pump removal method that avoids entering wet well) are required for submersible pumps.

N. Bedding for PVC force main is bank sand, a minimum of 6 inches on all sides of pipe.

O. PVC force mains shall be Pressure Class 150 or DIP bedded in bank sand and polyethylene wrapped.

P. The velocity in the force main and riser pipes shall be less than 8 fps and greater than 2 fps.

Q. Backfill structural excavations (wet well, etc.) with cement stabilized sand.

R. Lift station site plans shall be submitted in scales of 1 inch = 5 feet or 1 inch = 10 feet.

S. Provide a protective coating to interior walls of wet well. The City Engineer shall approve coating or additive used.

T. Lift station shall be equipped with a telephone dialer and a red alarm light, approved by City. A float or transducer system shall be installed and shall be connected to telemetry system to monitor the status of the lift station.

U. Power supply to lift station shall be 3 phase and 480 volts where possible.

V. A system of floats or approved transducer system shall be provided to control pumps.

W. A tee, plug valve, and blind flange assembly are required on the force main on the downstream side of the discharge valves and header. This is required so truck-mounted pumps can bypass the lift station pumps and piping while emergency repair or maintenance work is being done.

X. Lift station must be equipped with a tested quick-connect mechanism or a transfer switch properly sized to connect to an on-site generator.

Y. All lift station shall be required to have on-Site Generators. Generators must be sized to operate the lift station at its firm pumping capacity or at the average daily flow, if the peak flow can be stored in the collection system.

4.3.18 Design Analysis

A. Calculations of design flows for the overall development or project shall be approved by the City of La Marque.

4.4 QUALITY ASSURANCE

4.4.1 Prepare calculations and construction drawings under the supervision of a Professional Engineer trained and licensed under the disciplines required by the drawing. The final construction drawings must be sealed, signed, and dated by the Professional Engineer responsible for the development of the drawings. If more than one Professional Engineer was responsible for the development of the design/construction drawings, then the appropriate Professional Engineer should seal the drawings he is responsible for.

4.5 UNSEWERED BUILDING SITES AND SEPTIC TANKS

4.5.1 It is the responsibility of the land owner to contact the City to determine if a site has sanitary sewer service available.

4.5.2 If a lot or parcel is within 500 feet of an existing sanitary sewer then the site shall tie-on to the existing sanitary sewer. The owner/developer must pay for all materials, installation, and testing before the city will accept the sewer for maintenance.

4.5.3 Building sites proposing On-Site Sewage Facilities (OSSF) (i.e. septic tanks) shall obtain approval and applicable permits from the Galveston County Department of Environmental Health. A copy of the permit shall be provided to the City of La Marque prior to OSSF installation.

CITY OF LA MARQUE

CHAPTER 5

STORM WATER DRAINAGE DESIGN CRITERIA

CHAPTER 5 – STORM WATER DRAINAGE DESIGN

5.1 STORM WATER DRAINAGE DESIGN GENERAL

5.1.1 The following sections include criteria for the design of storm water drainage improvements for the City of La Marque and its Extraterritorial Jurisdiction (ETJ). Refer to each Drainage District Criteria Manual for complete methodologies, descriptions, tables and charts.

5.1.2 Drainage approval by the City of La Marque is required for all development within city limits and within its extraterritorial jurisdiction. All drainage facilities proposed within these limits are to adhere to these criteria.

5.1.3 Development within the City of La Marque or its extraterritorial jurisdiction will also require the approval of the applicable Drainage District. Galveston County Drainage District No. 1 and No. 2.

5.1.4 All outfall pipes, ditches, and structures that enter Drainage District Channels or Facilities shall be designed according to requirements of the applicable Drainage District. If there is a discrepancy in the drainage criteria requirements between the City and applicable Drainage District, the City Engineer shall determine which criteria to apply.

5.1.5 Development and drainage shall comply with all applicable City of La Marque Ordinances, including, but not limited to, the Floodplain Ordinance.

5.1.6 The goal for these criteria is to provide protection in a 100-year storm event. This is accomplished with the application of various drainage enhancements such as storm sewers, roadside ditches, open channels, detention, and overland (sheet) runoff. The combined system is intended to prevent structural flooding from extreme events up to a 100-year storm. In order to protect existing properties, water levels, due to runoff, shall not be increased upstream or downstream of a development due to the improvement.

A. Street Drainage: Street ponding of short duration in significant storms is anticipated and designed to contribute to the overall drainage capability of the system. Storm sewers and roadside ditch conduits are designed as a balance of capacity and economics. These conduits are designed to convey less intense, more frequent 5 year storms with the intent of allowing for traffic movement during these events. When rainfall events exceed the capacity of storm sewer system, the additional runoff is intended to be stored or conveyed overland in a manner that reduces the threat of flooding to structures.

B. Flood Control: The City of La Marque is a participant in the National Flood Insurance Program. The intent of the flood insurance program is to make insurance available at low cost by providing for measures that reduce the likelihood of structural flooding.

C. Relationship to the Permitting Process: Approval of storm drainage is a part of the review process for platting and permitting of the new development. All plans for plats and proposed new construction shall include drainage improvements in the plans submitted to the City Engineer.

5.2 DEFINITIONS

5.2.1 Conduit: Any open or closed device for conveying flowing water.

5.2.2 Drainage Area Map: Area map of watershed which is subdivided to show each area served by each subsystem.

5.2.3 GCDD No. 1: Galveston County Drainage District No. 1.

5.2.4 GCDD No. 2: Galveston County Drainage District No. 2.

5.2.5 FEMA: Federal Emergency Management Agency.

5.2.6 Hydraulic Grade Line: A line representing the pressure head available at any given point within the drainage system.

5.2.7 In-Fill Development: Development of open tracts of land in areas where the storm drainage infrastructure is already in place and takes advantage of the existing infrastructure as a drainage outlet.

5.2.8 Public Storm Sewers: Defined as sewers and appurtenances that provide drainage for a public right-of-way, or more than one private tract, and are located in public right-of-way or easement and officially accepted by the City for maintenance. Private storm sewer connections public storm sewers shall occur at a manhole or at the back of an inlet, as approved by the City. All private storm sewers shall be constructed in conformance with these standards.

5.2.9 Rational Formula: A method for calculating the peak runoff for a storm drain system.

5.2.10 Redevelopment: A change in land use that alters the impervious cover from one type of development of either the same type or another type, and takes advantage of the existing infrastructure in place as drainage outlet.

5.2.12 Sheet Flow: Overland storm runoff that is not conveyed in a defined conduit, and is typically in excess of the capacity of the conduit.

5.3 DESIGN REQUIREMENTS

5.3.1 Storm Sewer Easements – the following minimum easements are required when facilities are not located within public street rights-of-way:

A. When not adjacent to public street rights-of-way, the minimum width shall be twenty feet (20') with the storm sewer centered in an exclusive easement.

B. For storm sewers greater than eight feet (8') and less than or equal to twelve feet (12') in diameter or width, the minimum width of an exclusive easement shall be twenty-five feet (25').

C. For storm sewer greater than twelve feet (12') in diameter or width, the minimum width of an exclusive easement shall be determined by the City Engineer.

D. For storm sewers whose depth to flow line is greater than fifteen feet (15'), add five feet (5') to the 20 feet (20') minimum easement width.

E. For all easements specified, a minimum distance of five feet (5') must be maintained from the easement line to the outside edge of the storm sewer.

F. Where approvals are granted for a special use or combination easement located along side lot or back lot, the minimum width shall be twenty-five feet (25'). The easement width shall meet or exceed all other easement requirements.

G. For specifically approved storm sewers located in an exclusive easement adjacent to public rights-of-way, the minimum easement width shall be ten feet (10'). The easement width shall meet or exceed all other easement requirements.

5.3.2 All projects shall be tied to National Geodetic Survey (NGS) Datum Adjustment which matches the Federal Emergency Management Agency (FEMA) rate maps or the most current NGVD which matches the FEMA rate maps. At least two references to bench marks relating to the FEMA rate maps must be identified. Equations may be used to translate other datum adjustments to the required adjustment.

5.3.3 Plan sets will include a drainage area map which shall contain all storm sewer drainage calculations.

5.3.4 All drainage systems for curb and gutter pavements shall be underground closed conduits; individual residential lot drainage is exempt. Drainage systems for pavements without curb and gutter shall be roadside open-ditch sections.

5.3.5 Plan sets shall include the 5 year Hydraulic Grade Line for storm sewers and roadside ditches on the plan and profile sheets.

5.3.6 The quantity of storm water runoff (peak discharge) shall be determined for each inlet, pipe, roadside ditch, channel, bridge, culvert, outfall, or other designated design point by using the following criteria:

A. Determination of Runoff:

Design storm Events - All drainage improvements shall be designed for the following storm frequencies:

Roadside Ditches	5 years
Storm Sewers	5 years
Open Drainage Channels serving less than 100	25 years
acres	25 years
Secondary Arterials	100-years
Bridges	100-years
Creeks/Channels	100-years
Detention Facilities	

B. Intensity-Duration Curves: TxDOT Manual provides intensity-duration values to be used for storm sewer and roadside ditch design in the City of La Marque. These intensities are derived from the formula:

$$I = \frac{b}{(d+t_c)^e}$$

Values are as listed below:

Rainfall Intensity-Duration-Frequency Coefficient for Galveston County						
Coefficient	**2-year**	**5-year**	**10-year**	**25-year**	**50-year**	**100-year**
e (in)	0.796	0.751	0.749	0.730	0.718	0.696
b	65	76	80	89	98	96
d (mins)	10.4	9.6	9.6	9.6	9.6	10.4

C. The Rational Method shall be used for determining the peak flow rate in the sizing of all local drainage improvements with drainage areas less than 100 acres.

D. Coefficients for the Rational Method:

a. Run-Off Coefficient: The following values for the run-off coefficient "C" in the Rational Method formula will vary based on the land use. Land use types and "C" values which are to be used in La Marque are as follows:

Land Use Type	Run-Off Coefficient
Raw Undeveloped Acres	0.20

Improved Undeveloped Acres (i.e. mowed filled, regraded, etc.)	0.30
Park Land	0.20
Residential:	
Single Family Lots greater than 0.75 acre	0.35
Single Family Lots 0.25 acre to 0.75 acre	0.45
Single Family Lots less than 0.25 acre	0.55
Townhomes/Patio Homes	0.65
Commercial	0.80
Multifamily	0.80
Industrial	
50% impervious	0.65
75% impervious	0.75
95% impervious	0.85
Pond (detention and amenity)	1.00

b. Determination of Time Concentration: Time of concentration shall be calculated based upon an analysis of the actual travel time from the most remote point in the drainage area. The travel path should be clearly denoted and a sketch included in the design calculations.

E. Design Frequency:

a. Design Frequency:

(1) Newly Developed Areas: The design storm event for sizing storm sewers in newly developing areas will be a 5-year rainfall. Detention shall be provided and in accordance with Section 5.3.6 J. Calculations shall show that water surface elevations are not increased upstream or downstream of the tract.

(2) Redevelopment or In-Fill Development: The existing storm drain will be evaluated using a 5 year storm, assuming no development takes place. The storm drain will then be evaluated with the development in place.

(a) If the proposed redevelopment has a lower or equal impervious cover, no modifications to the existing storm drain are required.

(b) If the impervious cover is increased, detention shall be provided in accordance with Section 5.3.6 J.

(2) Private Drainage Systems: Storm sewers for private drainage systems shall conform to the requirements of public drainage systems.

b. Velocity Considerations:

(1) All storm drains shall be designed by the application of the Continuity Equation and Manning's Equation.

(2) Design velocities shall be a minimum of 2 feet per second (fps) with the pipe flowing full.

(3) Maximum velocities should not exceed 7 feet per second.

(4) Minimum Storm Sewer Pipe Slopes:

(5)

Pipe Diameter	% Slope
24	0.07
30	0.05
36	0.04
42	0.032
48	0.027
54	0.023
60	0.020

For pipe sizes not listed above, the minimum slope should be determined utilizing a design velocity of 2 fps.

c. Pipe Sizes and Placement:

(1) Use the storm sewer and inlet leads with at least 24 inch inside diameter or equivalent cross-section. Box culverts shall be at least 2'x2'. Closed conduits, circular, elliptical, or box, shall be selected based on hydraulic principals and economy of size and shape.

(2) Larger pipes upstream should not flow into smaller pipes downstream unless the upstream system is intended for use in detention.

(3) Match crowns of pipe at any size change.

(4) Locate public storm sewers in public street rights-of-way or in dedicated drainage easements. Side and back lot easements are discouraged. If unavoidable, the easement shall be at least 20 feet wide with the storm sewer centered in the easement.

(5) Follow the alignment of the right-of-way or easement when designing cast-in-place concrete storm sewer easements.

(6) A straight line shall be used for inlet leads and storm sewers.

(7) Center storm sewer in side-lot storm sewer easements.

(8) Provide 5 feet minimum from edge of pipe to edge of easement.

d. Starting Water Surface and Hydraulic Gradient:

(1) The hydraulic gradient shall be calculated assuming the top of the outfall pipe as the starting water surface.

(2) At drops in pipe invert, should the upstream pipe be higher than the hydraulic grade line, then the hydraulic grade line shall be recalculated assuming the starting water surface to be at the top of pipe at that point.

(3) For the design storm, the hydraulic gradient shall at all times be below the gutter line for all newly developed areas.

e. Manhole Locations:

(1) Use manholes for precast conduits at the following locations:

(a) Size or cross-section changes.

(b) Inlet and conduit intersections.

(c) Changes in pipe grade.

(d) A maximum spacing of 500 feet measured along the conduit run.

(e) Manholes shall be placed so as not to be located in driveways.

f. Inlets:

(1) Locate inlets at all low points in gutters.

(2) Valley gutters across intersections are not permitted.

(3) Inlet spacing is generally a function of gutter slope. For minimum gutter slopes, the maximum spacing of inlets shall result from a gutter run of 500 feet from high point in pavement or the adjacent inlet on a continuously graded street section, with a maximum of 1000 feet of pavement draining towards any one inlet location.

(4) Use only Standard Inlets:

Inlet	General Application	Capacity
Type A	Parking Lots/Small	2.5 cfs
Type B-B	Areas	5.0 cfs
Type C	Residential	5.0 cfs
Type C-1	Streets	10.0 cfs
Type D	Commercial	2.0 cfs
Type E	Parking Lots	20.0 cfs
	Roadside Ditches	

(5) Beehive grate inlets or other specialty inlets are not allowed.

(6) Do not use grate top inlets in an unlined roadside ditch.

(7) Place inlets at the end of the proposed pavement, if drainage will enter or leave pavement.

(8) Do not locate inlets adjacent to esplanade openings.

(9) Place inlets on side streets intersecting major streets, unless special conditions warrant otherwise.

F. Consideration of Overland Flow:

a. Design Frequency: The design frequency for consideration of overland sheet flow will consider extreme storm events which exceed the capacity of the underground storm sewer system resulting in ponding and overland sheet flow through the development to the primary outlet.

b. Relationship of Structure to Street: All structures will be at least 24 inches higher than the highest level of ponding anticipated resulting from the 100-year event analysis.

c. Calculation of Flow:

(1) Streets will be designed so that consecutive high points in the street will provide for a gravity flow of drainage to the ultimate outlet.

(2) The maximum depth of ponding will be 12 inches above the curb gutter, or 6 inches above the centerline of roads without curb, during the 100-year storm event.

(3) Sheet flow between lots can be provided only through a dedicated drainage easement.

(4) A map shall be provided to delineate extreme event flow direction through a proposed development and how this flow is discharged to the primary drainage outlet.

In areas where ponding occurs and no sheet flow path exists, then calculations showing that run-off from the 100-year event can be conveyed through inlets to the storm system and/or detention pond must be provided.

d. Overland flow shall enter the drainage facilities (channels or detention pond) through a storm sewer sized to convey the 100-year event. Calculations shall be submitted for sizing the storm sewer and determining that adequate inlet capacity exists.

G. Design of Open Channels:

a. Design Frequency:

(1) Open channels shall be designed according to the Galveston County Drainage Criteria Manual, or the applicable Drainage District, whichever is more stringent.

(2) Design standards for channel construction should follow the requirements specified in the corresponding Criteria Manual.

b. Determination of Water Surface Elevation:

(1) Water surface elevations shall be calculated using Manning's Equation and the Continuity Equation.

(2) For the design storm event, the water surface should be calculated to remain within banks and below freeboard.

c. Design of Culvert Crossings for Open Channels:

(1) Head losses in culverts shall conform to TxDOT Design Division Hydraulics Manual, Chapter 7 - Culverts.

(2) Culverts shall be Class III RCP conforming to ASTM C-76 or smooth interior dual wall corrugated polyethylene pipe conforming to AASHTO M294.

d. Channels shall be seeded or sodded and a permanent stand of grass obtained prior to project acceptance.

H. Design of Roadside Ditches:

a. Design Frequency:

(1) Roadside ditch design is permissible only for single family residential lots having widths larger than, or equal to, 120 feet.

(2) Design capacity for a roadside ditch shall be to 0.5 feet below the edge of pavement or the natural ground at the right-of-way line, whichever is lower.

(3) The design must include an extreme event analysis to indicate that structures will not be flooded.

b. Velocity Considerations:

(1) A grass lined or unimproved roadside ditch shall have side slopes no steeper than 3:1.

(2) Minimum grades for roadside ditches shall be 0.1 foot per 100 feet.

(3) Calculation of velocity will use a Manning's roughness coefficient of 0.040 for earthen sections and 0.025 for ditches with paved inverts.

(4) Use erosion control methods acceptable to the City when design velocities are expected to be greater than 4 feet per second.

c. Culverts:

(1) Culverts will be placed at all driveway and roadway crossings, and other locations where appropriate. Permanent low water crossings are not permitted.

(2) Culverts will be designed assuming outlet control.

(3) Roadside culverts are to be sized based on drainage area. Calculations are to be provided for each block based on drainage design criteria presented in this manual.

(4) Cross open channels with roadside culverts no smaller than 18 inches in diameter. The size of culvert used shall not create a head loss of more than 0.20 feet greater than the normal water surface profile without the culvert.

(5) Flow from roadside ditches must be conveyed to the drainage channel through a roadside ditch interceptor structure and pipe.

d. Depth and Size Limitations:

(1) All roadside ditches shall be fully contained in the right-of-way or a recorded drainage easement.

(2) The maximum depth in residential areas shall not exceed 3 feet from the edge of pavement.

(3) Ditches in adjoining and parallel easements shall have the top of bank not less than 2 feet from the outside easement line.

(4) Roadside ditch bottoms should be at least 2 feet wide.

(5) Roadside ditch side slopes shall not exceed 3:1.

I. Design of Outfalls

a. Outfall design shall conform to the applicable Drainage District's Design Criteria Manual.

b. Outfalls shall be placed one foot above the receiving waterway.

c. Wet detention ponds may be connected by a submerged pipe. Storm sewers discharging into wet detention ponds may be submerged from the last manhole to the outfall.

d. Outfalls must have a means to control erosion and washouts (i.e. concrete paving, interlocking blocks). Rip-rap is not acceptable.

J. Storm Water Detention:

a. Application of Detention:

(1) As a normal consideration, storm water detention is required. The use of on-site detention is required in order to mitigate potential damage to existing structures unless participation in regional detention facilities is available that will provide equivalent protection to downstream property owners.

(2) Design calculations for sizing the detention basin and related structures must be performed by the applicable method described in the following sections.

(3) All calculations shall be sealed, signed, and dated by a registered professional engineer.

(4) A parking lot may be used as part of the detention system, provided that the maximum depth of water over the inlet does not

exceed nine inches (9") and the maximum depth in the parking stall does not exceed six inches (6").

(5) All detention basins shall be maintained by the property owners except regional detention facilities that are owned and operated by the City of La Marque, GCDD No. 1 and GCDD No. 2.

b. Calculation of Detention Volume:

(1) For developments with drainage areas of more than 100 acres, a detailed hydrologic analysis utilizing the HEC-HMS and HEC-RAS Flood Hydrograph method will be required following the procedure outlined the Galveston County Drainage Criteria Manual, or applicable drainage district if more stringent.

(2) For developments with drainage areas 100 acres or less, the acre-feet of flood control storage, S, to be provided by the facility for the 100-year storm event is:

$$S = I^{1/2} \times A$$

Where I = the average percent imperviousness of the area draining into the facility (÷ 100), and A = the drainage area of the facility in acres.

c. Calculation of Outlet Size:

(1) The minimum outflow pipe for a detention facility is 24 inches. When further flow restriction is necessary, a restriction should be placed at the entrance to the outfall pipe. Locate the restrictor to facilitate inspection and debris removal. Calculate the allowable outflow orifice size using the following equation:

$$Q = CA\sqrt{2gH}$$

Where:

Q = allowable discharge in cubic feet per second
C = coefficient of discharge
- 0.8 for short segments of pipe
- 0.6 for openings in plates or standpipes
A = maximum allowable area of orifice in square feet
g = acceleration due to gravity (32.2 feet/second^2)
H = head difference between entrance and exit in feet when orifice is fully submerged, or the difference between centroid of the orifice in feet when orifice is partially submerged.

Determine H by establishing a maximum ponding level in the

detention facility during the 100-year storm and assuming a tailwater at the top of the downstream end of the outlet pipe, or at a depth in the outlet channel associated with the maximum release flow rate, whichever is higher. In addition to a pipe outlet, the detention basin shall provide an extreme event emergency overflow spillway that will protect structures from flooding should the detention basin be overtopped.

(2) Corrugated Metal Pipe (CMP) is not allowed for outfall structures.

d. Detention Pond Structural Requirements:

(1) Side slopes shall not exceed a slope of 4 feet horizontally to one 1 vertically (4:1)

(2) Dry detention ponds exceeding 60 feet in any direction shall have concrete pilot channels to aid drainage. Unlined detention pond bottom shall have a minimum slope of 1%.

(3) Concrete pilot channels shall have a minimum width of 6 feet and a minimum thickness of 4 inches with #3 rebar spaced at 12 inches or #4 rebar spaced at 24 inches on center each way. The concrete channels shall be constructed of 5 sack cement concrete with a minimum compressive strength of 2500 psi at 28 days. Provide a 1-inch minimum depression per every 1 foot of transverse slope with redwood headers spaced every 40 feet.

(4) Appropriate covering (grass, slope paving, etc.) shall be established on side slopes and pond bottom to prevent erosion during periods of maximum water velocity.

(5) A concrete or articulated block spillway, set at the maximum ponding elevation, shall be provided near the detention pond outfall structure, starting at the detention pond top of bank and extending to the toe of slope of the receiving channel.

e. Ownership and Access:

(1) Private Facilities:

(a) Detention facilities which rely on gravity to discharge storm water are preferred by the City.

(b) Responsibility for maintenance of the detention facility must be indicated on the plat and construction plans.

(c) All private properties being served shall have drainage access to the pond.

(d) A recorded maintenance agreement with a specific responsible party shall be provided when multiple tracts are being served.

(e) The maintenance berms shall be at least 20 feet wide surrounding the top of bank of the detention area.

(2) Public Facilities:

(a) Facilities may be accepted for maintenance by the City but only in cases where public drainage is being provided.

(b) The City will require a maintenance work area 30 feet wide surrounding the top of bank of the detention area. Public rights-of-way or permanent access easements may be included as a portion of this 30 feet width.

(c) A dedication of the maintenance easement or reserve must be provided by plat.

(d) Proper dedication of public access to the detention pond must be shown on the plat or by separate instrument. This includes permanent access easements with overlapping public utility easements.

f. Pumped Detention

Pumped detention systems will not be maintained by the City of La Marque under any circumstances and will be considered for approval only under the following conditions:

(1) A gravity system is not feasible from an engineering standpoint.

(2) The percentage of pumped volume must not exceed 50% of the total volume of the basin, the remaining volume must be able to drain from the basin by gravity.

(3) The total time to empty the pumped volume may not exceed 72 hours after the gravity portion has vacated.

(4) At least two pumps are provided, each of which is sized to pump the design flow rate; if a three-pump system is used, any two of the three pumps must be capable of pumping the design flow rate.

(5) The selected design outflow rate must not aggravate downstream

flooding. Example: A pump station designed to discharge at the existing 100-year flow rate each time the system comes on-line could aggravate flooding for more frequent storm events.

(6) Fencing of the control panel is provided to prevent unauthorized operation and vandalism.

(7) An on-site emergency generator capable of operating the pump station for the amount of time required to vacate the pumped volume must be provided.

(8) A recorded maintenance agreement with a specific responsible party shall be provided to ensure that the system will be operated and maintained on a continuous basis.

(9) Detention volume for pump detention shall be minimum 1.0 acre-ft/acre.

If a pumped system is proposed, it is strongly recommended that preliminary conceptual design be submitted to the City Engineer and applicable Drainage District for review before any detailed engineering is performed.

5.4 SUBMITTALS

5.4.1 All preliminary drainage plan submittals shall comply with and fully follow the procedures outlined in the City of La Marque's Subdivision Ordinance.

5.4.2 Preliminary Submittals: Submit for review and comment:

A. Lot and street layout.

B. The approximate drainage areas for each system.

C. The proposed drainage system.

D. The proposed pipe diameters.

E. Proposed detention areas with approximate volumes and depths.

F. Any proposed drainage easements.

G. Floodplain boundary, if applicable.

H. Floodway boundary, if applicable.

I. Base Flood Elevation.

5.4.3 Final Design: Submit the following for approval:

A. Copies of any documents which show approval of exceptions to the City design criteria.

B. Design calculations for storm line sizes and grades and for detention facilities.

C. Design calculations for the hydraulic grade line of each line or ditch, and for detention facilities. Calculations shall show that the water surface elevations will not be increased upstream or downstream of the property on a 5 year and 100-year event.

D. Contour map of the project and drainage area map for the project and the upstream.

E. Plan and profile sheets showing storm water design.

F. Projects located within a flood plain boundary or within a flood plain management area shall:

a. Show the flood plain boundary or flood plain area, as appropriate, on the drainage area map.

b. Show the floodway boundary, if applicable.

5.4.4 Additional Submittals: Submit the following for approval:

A. Previous review prints.

B. Revised drawings.

C. Storm water detention maintenance agreement letters.

D. Pipeline company agreements.

E. Any and all applicable permits and agreements.

5.5 QUALITY ASSURANCE

5.5.1 Prepare calculations and construction drawings under the supervision of a Professional Engineer trained and licensed under the disciplines required by the drawings being prepared. The final construction drawings and all design calculations must be sealed, signed, and dated by the Professional Engineer responsible for the development of the drawings. Drawings shall contain the following statement "Based on these plans and calculations and minimum building elevations prepared under my direction, no structure will be subject to flooding in the 100-year storm and the upstream and downstream water surface elevations will not be increased."

5.5.2 A geotechnical report shall be performed by, or under the supervision of, a currently registered Professional Engineer in the State of Texas, pertaining to the Drainage Design requirements contained within this section. All reports and documents shall be sealed, dated, and signed by the Engineer responsible for the preparation thereof.

CITY OF LA MARQUE

CHAPTER 6

PAVING DESIGN CRITERIA

CHAPTER 6 – PAVING DESIGN

6.1 PAVING DESIGN GENERAL

6.1.1 Criteria for the geometric design guidelines for streets, street paving requirements, and standard paving notes for drawing call-outs are herein established.

6.2 DEFINITIONS

6.2.1 AASHTO - American Association of State Highway and Transportation Officials.

6.2.2 ACI - American Concrete Institute.

6.2.3 ASTM - American Society for Testing Materials.

6.2.4 Curb Sections: Full width concrete pavement with doweled-on 6 inch high vertical curbs or 4"x12" curbs. Curb and gutter sections require inlets and underground storm sewers.

6.2.5 Geotechnical Engineer: An engineer certified by the American Association for Laboratory Accreditation (AALA).

6.2.6 HMAC: Hot Mix Asphaltic Concrete.

6.2.7 Roadway Ditch Sections: Ditch sections adjacent to either full width reinforced concrete pavement or asphaltic pavement. Roadside ditch sections do not require underground storm sewers; however, the ditch sections must be designed to accommodate a 5-year storm runoff.

6.2.8 TxMUTCD - Texas Manual on Uniform Traffic Control Devices.

6.3 DESIGN REQUIREMENTS

6.3.1 The following design requirements are applicable to all pavement within right-of-way limits within the City of La Marque and its ETJ:

A. All paving and construction plans shall be approved by the City of La Marque for all streets.

B. Street design should conform to all applicable planning tools, such as the Texas Manual on Uniform Traffic Control Devices, major thoroughfare plans, and master plans. Other considerations for design should include street function, street capacity, service levels, traffic safety, pedestrian safety, and utility locations. These additional considerations may affect the minimum requirements set forth herein. Refer to the City Thoroughfare Plan.

C. Design shall conform to the City of La Marque's Construction Details where applicable, or if not available, the standards of the City of Houston.

D. Minimum Right-of-Way Width, Paving Section, and Maximum Design Speed Requirements for:

a. Marginal Access Streets: Minimum 50 feet right-of-way, 2 lanes undivided without median. Maximum design speed 30 MPH

b. Local: Minimum 60 feet right-of-way, 2 lanes undivided without median. Maximum design speed 30 MPH

c. Minor Collector Streets: Minimum 80 feet right-of-way, 4 lanes undivided without median. Maximum design speed 30 MPH

d. Major Collector Streets: Minimum 80 feet right-of-way, 4 lanes divided with raised median, minimum 12 feet wide, Maximum design speed 35 MPH.

e. Minor Arterial: Minimum 120 feet right-of-way, 4 lanes divided with raised median, minimum 32 feet wide, Maximum design speed 45 MPH.

f. Major Arterial Streets: Minimum 120 feet right-of-way, 4 to 6 lanes divided with raised median, minimum 32 feet wide, Maximum design speed 40 MPH.

g. Super Arterial: As required by TxDOT

E. Minimum Width Requirements and Paving:

a. Curb and Gutter sections for low-density residential developments: 28 feet back-to-back of curb (B/B).

b. Pavement for open ditch sections for low density residential developments: 26 feet edge-to-edge of pavement, with a 6-foot shoulder on either side of the pavement:

(1) Reinforced Concrete: A thickened edge is required for this type of pavement. The thickened edge should be 8 inches decreasing to 6 inches at a point 4 feet from the edge of the pavement. Use only when approved by the City in large lot residential developments.

(2) Asphalt: 2 inch thick HMAC with 8 inch thick crushed limestone or crushed concrete base. Use only when approved by the City in large lot residential developments.

c. Curb and gutter sections of medium density residential, industrial, and commercial development secondary and collector streets: 38 feet B/B of curb minimum.

d. Pavement of major arterials and thoroughfares: Two divided traffic lanes, each way, of 25 feet B/B four (4) lane divided roadways or 34 feet B/B of curb for six (6) lane divided roadways.

F. Minimum Thickness and Reinforcement Requirements for Concrete Pavements: The following requirements are the minimum allowable. Pavement thickness and reinforcement shall be designed by the Professional Engineer responsible for the project based on a current soils analysis and recommendations by a qualified geotechnical engineer. All concrete shall have a minimum compression strength of 4,000psi. The design requirements in special cases may dictate a greater strength. Pavement design based on soils analysis, use, loading, and life span may require greater thickness and more reinforcement than the following minimums:

a. For pavement widths less than or equal to 28 feet B/B of curb:

(1) Minimum concrete slab thickness shall be 6 inches with F_c = 4,000 psi and reinforcement shall be Grade 60, f_y = 60,000 psi, #4 deformed reinforcing bars spaced at 18 inches center-to-center both ways and minimum lap lengths of 18 inches. Expansion joints shall be placed at the end of each curb return and at a maximum spacing of 40 feet 6 inches. Expansion joints shall include a ¾ inch redwood header, ¾ smooth dowel bar (18 inches length) and a 26 gauge hard plastic tube. The expansion joint shall include a standard steel wing plate.

(2) Minimum stabilized subgrade thickness shall be 8 inches.

b. For pavement widths greater than 28 feet B/B and for minor and major collectors

(1) Minimum concrete slab thickness shall be 7 inches with f_c = 4,000 psi and reinforcement shall be Grade 60, f_y = 60,000 psi, #4 deformed reinforcing bars spaced at 18 inches center-to-center both ways and minimum lap lengths of 18 inches. Expansion joints shall be placed at the end of each curb return and at a maximum spacing of 40 feet 6 inches on residential and collector streets, and a maximum spacing of 60 feet 6 inches on boulevards and major thoroughfares.

(2) Minimum stabilized subgrade thickness shall be 8 inches.

c. For pavement minor and major and arterials:

(1) Minimum concrete slab thickness shall be 8 inches with f_c = 4,500 psi and reinforcement shall be Grade 60, f_y = 60,000 psi, #5 deformed reinforcing bars spaced at 16 inches center-to-center both ways and minimum lap lengths of 18 inches.

(2) Minimum stabilized subgrade thickness shall be 12 inches.

G. Subgrade Treatment: The Geotechnical Engineer shall base depth of subgrade stabilization on structural number (SN) in conjunction with pavement thickness design. Following is a general guidance for subgrade treatment:

a. For subgrade soil conditions with a plasticity index (PI) of 10 or more, the subgrade shall be stabilized with lime and compacted to 95% standard proctor density. Subgrade shall be stabilized with the recommended percent of lime (6% min.) by weight as determined by the Geotechnical Engineer.

b. For subgrade soil conditions containing a clean sand with no clay content, the subgrade shall be stabilized with cement.

c. For subgrade soil conditions containing silt, the subgrade shall be stabilized with lime-fly ash.

H. Requirements for Intersections, Turnouts, Transitions, and Thoroughfares:

a. At a “T” intersection with a street that has not been improved to its ultimate width, concrete pavement should be stopped either at the right-of-way line or at the end of the curb return, whichever would require less concrete removal at a future date.

b. For roadway turnouts placed at an existing street intersection, the turnout should be designed to fit the ultimate pavement width of the intersecting cross-street and then transitioned to the existing roadway.

c. The usual transition length for meeting an open ditch street is 50 feet for street widths less than or equal to 28 feet B/B; 75 feet for up to 38 feet B/B width, and 100 feet for 41 feet B/B width.

(1) Streets other than concrete shall have transitions of a minimum thickness of 8 inches of lime stabilized subgrade, 6 inches of hot-mix asphaltic concrete base, or approved equal, with 2 inches of hot-mix asphaltic surfacing.

(2) Concrete streets shall have transitions of a minimum thickness of 6 inches of stabilized subgrade and 6 inches of concrete pavement.

d. When paving only one roadway of a proposed two roadway thoroughfare (boulevard section) all left turn lanes and esplanade crossovers shall be paved to the centerline of the street right-of-way.

I. Requirements for Roadway Pavement with Open Ditch Sections (large lot residential subdivisions only):

a. Minimum grade on ditches shall be 0.20 percent.

b. Ditch capacity shall be designed to accommodate a 5-year storm runoff event.

c. Maximum side slopes of ditches shall be 3 feet horizontally to 1 foot vertically (3:1). Sides may be sloped to 4:1 or 5:1 for easier maintenance by property owner.

d. Culverts for roadside ditches only shall be designed to carry ditch discharge but not less than 18 inches diameter. Culverts shall be Class III RCP conforming to ASTM C-76 or smooth interior dual wall corrugated polyethylene pipe conforming to AASHTO M294.

e. The minimum paving radius for cul-de-sac shall be 40 feet in a 50-foot radius right of way if the cul-de-sac is located on the interior of a residential subdivision, and is 600 feet or less in length. If the cul-de-sac opens onto a thoroughfare or exceeds 600 feet in length, the minimum pavement radius shall be 45 feet in a 50-foot radius right of way.

J. Requirements for Roadway Pavement with Curb and Gutter Sections:

a. Minimum gutter gradient shall be 0.30 percent.

b. Maximum cut from finished grade at property line to top of curb shall be 1.75 feet. The desired slope for driveways is 2% to 8%.

c. Minimum grade shall be 0.70 percent fall around intersection turnout for a maximum radius of 25 feet. Grades for larger radius shall be determined on an individual basis.

d. Vertical curves shall be installed when algebraic differences in grades exceed 1 percent. Elevations shall be shown at 10 feet intervals through vertical curves. Maintain a minimum of 0.02 feet elevation change at 10 feet intervals by altering the calculated elevations.

e. When a curb and gutter intersects a drainage ditch, the grade of gutter shall be above the designed water surface of the ditch.

f. The maximum travel distance of water in the street gutter to a curb inlet shall be 300 feet on a major thoroughfare and in commercial areas. The maximum travel distance of water in the street gutter to a curb inlet in a single-family residential area shall be 500 feet.

g. All new residential and local streets poured with a curb and gutter shall have a minimum of a 4 inch rollover, lay down curb. All new collector and thoroughfare streets shall have the standard 6 inch stand up curb. A

standard 6 inch curb shall be used adjacent to all storm sewer inlets; 4 inch rollover curbs shall be transitioned to a 6 inch curb near the inlet.

h. Major thoroughfares shall be super-elevated in accordance with AASHTO whenever the centerline radius of lanes or right-of-way is less than 2,000 feet.

i. The amount of cross-slope over the pavement section shall be 2% sloping away from the crown of road or centerline.

j. A minimum gradient of 0.70 percent around the longest radius is required on an L-Type street intersection or cul-de-sac.

k. Fill lines shall be shown on the drawings. If this type of fill is required and the pavement is adjacent to a nonparticipating property owner, fill easements shall be obtained from the property owner and recorded. A copy of the easements shall accompany the final drawings. Construction of this nature will require back-slope drainage design to prevent trapping storm runoff.

l. Grades should be labeled for all tops of curb. Centerline grades are acceptable for open-ditch sections only.

m. The minimum paving radius for cul-de-sac shall be 40 feet in a 50-foot radius right of way if the cul-de-sac is located on the interior of a residential subdivision, and is 600 feet or less in length. Islands within cul-de-sacs are allowed provided that the minimum fire apparatus turning radius requirements are met. If the cul-de-sac opens onto a thoroughfare or exceeds 600 feet in length, the minimum pavement radius shall be 45 feet in a 50-foot radius right of way.

K. Requirements for Curbs and Sidewalks:

a. Standard height of a curb is 4 inches and 12 inches wide for curbs located along residential streets. Curb height for streets other than residential shall be 6 inches. The curb height for all esplanades shall be 6 inches.

b. Sidewalk wheelchair ramps shall be required at all intersections and driveways. The design and installation of ramps shall comply with Texas Accessibility Standards Architectural Barriers requirements.

c. All sidewalks are to be a minimum 5 feet in width and are to be constructed in accordance with the City of La Marque standard details.

d. Sidewalks are required along all curb and gutter streets. The developer, prior to the City's final one-year acceptance of the public infrastructure, must install sidewalks along right of way and reserves.

e. The location of all proposed and existing sidewalks shall be shown on the construction drawings.

L. Requirements for Driveways

a. Driveways shall be asphalt or reinforced concrete, and shall be installed from the existing pavement to the right-of-way line (property line), minimum. This applies to all types of new construction. It does not apply to property being actively used for agricultural purposes and designated with the agricultural-use exemption.

b. Refer to La Marque Standard Construction Details (Paving) for various driveway configurations.

M. Requirements for Miscellaneous Items:

a. The type and amount of subgrade treatment shall be shown on the drawings.

b. Paving headers shall be placed at the end of all concrete pavements.

c. All concrete to be removed shall be removed either to an existing joint or to a sawed joint.

d. Sight distance requirements based on the design speed of the roadway shall be used for determining lengths of crest vertical curves for all pavements except boulevard sections, which shall be designed for 45 mph.

e. Standard Type III City barricades shall be placed at the end of all dead-end streets not terminating in a cul-de-sac.

f. A letter of agreement from the affected pipeline company approving the construction plan crossing is required when paving is placed or construction work occurs over a transmission pipeline.

g. When meeting existing concrete pavement, horizontal dowels shall be used if no exposed reinforcing steel for interconnection with new pavement exists. Horizontal dowels shall be Grade 60, #6 rebars, 24 inches long, drilled and embedded 12 inches into the center of the existing slap and epoxied. Dowels shall be 18 inches center-to-center, unless otherwise specified.

h. When concrete is removed for interconnections, the pavement shall be saw cut and existing concrete removed to expose a minimum of 15 inches of reinforcing steel. If no reinforcing steel exists, use horizontal dowels as previously described.

i. Dead-end streets or ends of concrete slabs designed to be extended in the future shall have paving headers and 15 inches of reinforcing steel exposed beyond the pavement, coated with asphalt and wrapped with burlap or paving headers and dowel type expansion joint for future pavement tie.

j. Pavement extensions shall connect to the existing pavement with a pavement undercut and a minimum steel overlap of 18 inches.

k. Concrete pavement thickness design is required for all pavement within industrial areas and on major thoroughfares. Concrete pavement thickness design shall be based on AASHTO design procedures for rigid pavements.

l. Adjust manhole frames and covers within the limits of the pavement to meet the proposed final top of slab.

m. Adjust manhole frames and covers outside the limits of the pavement to conform to the final grading plan.

n. No more than one shrinkage crack shall be allowed in each forty foot header section. A shrinkage crack is defined as extending one-fourth or more of the full depth of the concrete (i.e. 1.5" or more on 6" thick concrete) appearing within one year of the final concrete placement. If two or more shrinkage cracks appear in one header section, the entire section shall be removed and replaced at contractor's expense.

o. If shrinkage cracks are less than one-quarter the depth of the concrete, then a recommendation letter and data sheets are required from the testing laboratory as to the type of sealant which will be used to seal the shrinkage cracks. This recommendation shall be approved by the City Engineer before application of sealant. Cracks shall be sealed at contractor's expense.

p. Core samples for the sections will be taken no sooner than the 28 day break of the original concrete pour sample.

6.4 QUALITY ASSURANCE

6.4.1 All construction drawings and specifications shall be prepared by or under the supervision of a currently Registered Professional Engineer of the State of Texas, and all documents shall be sealed, dated, and signed by the engineer responsible for the preparation.

6.4.2 A geotechnical report shall be performed by or under the supervision of a currently Registered Professional Engineer of the State of Texas disciplined in the science of soils analysis. All reports and documents shall be sealed, dated, and signed by the engineer responsible for the preparation.

6.4.3 All pavement design shall be supported by calculations to establish the required thickness and reinforcement.

6.4.4 The current soils report shall be the basis for design considering the use, loading, and life span of the proposed pavement.

CITY OF LA MARQUE

CHAPTER 7

Construction, Inspection, Approval and Acceptance Procedures for Public Infrastructure

CHAPTER 7

Construction, Inspection, Approval and Acceptance Procedures for Public Infrastructure

Introduction

The City of La Marque is experiencing considerable development throughout its jurisdiction. This includes development both inside the City Limits and within the City's Extraterritorial Jurisdiction (ETJ). It is, therefore, important for the City Council to approve a policy that sets out the procedures for the inspection, approval and acceptance of public infrastructure within its jurisdiction. These policies and procedures apply to construction in both subdivisions and commercial sites where it is anticipated that connections to the public infrastructure will be made, and where the infrastructure will be conveyed, either upon completion or in the future, to the City of La Marque for operation and maintenance.

These procedures are designed so the developers and contractors will know both the procedures to be followed and the costs for the required reviews and inspections in advance.

It is important that all publicly accepted, operated and maintained infrastructure constructed within its city limits and ETJ be compliant with the City's standards and requirements. It is anticipated that even if the City does not accept the infrastructure for immediate operation and maintenance, it may eventually. As such, developers and contractors should refer to the City's Zoning and Subdivision Ordinances, as well as the City's Design Criteria Manual for specific guidance on allowable uses, platting and approval procedures and construction standards.

These procedures are designed to set out the process for approvals by the City of La Marque during the construction phase of the development within the City of La Marque and its ETJ.

Note: For all projects within the ETJ, the developer should also contact the Galveston County Engineering Offices for instructions on their review procedures.

Permits and Inspection fees

The City currently utilizes a Consulting Engineer to provide infrastructure inspection services. The City expects the development to bear the costs of the services. The contractor is expected to apply for the appropriate permits and pay the required fees in advance of the project start. Fees shall be set from time to time by the City Council and are designed to include the cost of inspections. The City may amend its fee schedule at any time to ensure the costs for the service are being covered, and may pass increased costs along to the responsible party at any time.

Pre-construction Phase

Prior to construction and prior to the issuance of a permit from the City, a preconstruction conference will be held with City staff and the City's Consulting Engineer. It is expected that prior to the preconstruction conference the following will be provided to the City in advance for review by the staff and the Consulting Engineer:

- **Plans.** Plans, specifications and other documents relating to the proposed development are to be provided.
- **Contract and Technical Specifications.** The contract and technical specifications between the developer and the contractor is to be provided.

Attendees at the preconstruction meeting should include the City's staff, the City's Consulting Engineer, a developer representative, a representative of the developer's engineering firm, a contractor's representative, and other people as may be identified by the City prior to the meeting. Attendance by all designated attendees is mandatory.

The project will be fully discussed at the meeting including but not limited to the developer's timetable, the points at which the City should be contacted for inspections of the infrastructure, the method of scheduling inspections, and the name, address, and contact information of all relevant participants in the construction process.

Construction Phase

It is expected the City's Consulting Engineer will make periodic reviews of the construction sites. The contractor responsible for construction should follow the procedures established by the City of La Marque (Request form attached). The City's Consulting Engineer will review results of all testing data as required by the City's Design Criteria Manual.

Construction inspections will include but not be limited to the following.

- **Streets and sidewalks.** Inspections should be expected for sub-grade and base materials work, rebar placement, and concrete pours.
- **Drainage facilities.** The City's Consulting Engineer will inspect all storm water inlets, storm water drains, culverts, open ditches and detention facilities. Within their respective jurisdictions, representatives of Galveston Drainage District 1 and 2 will also inspect and approve all drainage facilities associated with the development. The contractor should schedule inspections for DD 1 or 2 directly with that office.
- **Water and Sewer Utilities.** Inspections should be expected of all water and sewer lines (both grade and pressure testing), lift stations, water and wastewater plants, manholes, fire hydrants, valve locations and taps.
- **Other. Depending on the type development, there may be landscaping, street lighting, façade type, and other inspections required. The contractor**

should be aware of all City requirements and call inspectors as appropriate.

Acceptance of Infrastructure for One-Year Maintenance Period

The City's Consulting Engineer will make a walk-through inspection upon completion of the project prior to making a recommendation for acceptance. The contractor is expected to have fully completed all construction prior to the walk-through inspection. During the walk-through inspection a punch list will be created. The contractor will be expected to complete/correct all the items on the punch list prior to presentation of the project to the City Council for acceptance.

Prior to acceptance for the one year maintenance period by the City Council the following must be on file with the City of La Marque.

- **Proof of Drainage District Approval.** Documentation must be on file with the City that the appropriate Drainage District has approved the drainage improvements for the development.
- **Maintenance Bond (for Subdivision infrastructure only).** Documentation of the receipt of a properly completed Maintenance Bond to the City. The Maintenance Bond amount shall be 25% of the total construction cost of the infrastructure, valid one-year from the date of accepted/or approval of the infrastructure.
- **Punch List.** Proof that all items listed on the punch list have been completed to the satisfaction of the City's Consulting Engineer.
- **Certification from the Engineer of Record.**
- Construction material testing lab report and Certification from the Geotechnical Engineer of Record.
- **As Built Drawings and Plans.** The contractor shall provide a true and correct paper and electronic copy in the format prescribed by the City of La Marque Design Criteria Manual, of the project as-built for filing and recording by the City. Construction documents shall be provided by both PDF and cadd (.dwg).
- **Engineer's Letter of Recommendation.** A letter of recommendation from the City's Consulting Engineer is required. This letter will document the project has been constructed in accordance with the plans and specifications originally reviewed, inspections during the construction process, and the Maintenance Bond and as-built drawings are properly executed and on file. The letter will be to recommend acceptance of the infrastructure for the one-year maintenance period to the City Council.
- **Electronic files of all of the above shall be required.**

No building permits will be issued for the development until the City Council has accepted the project for the one year maintenance period.

Final Acceptance of Infrastructure

Prior to final acceptance of the infrastructure, and prior to the end of the one year maintenance period, a final inspection shall be scheduled and conducted by the City's Consulting Engineer. The responsible party for the development is required to

contact the City and schedule the inspection. This inspection should be no sooner than eleven months after the beginning of the maintenance period. This inspection will be designed to inspect the infrastructure for failures or other deficiencies that may have occurred during the maintenance period. A punch list will be created if needed as a result of the inspection. The developer and/or contractor are expected to complete/correct all the items on the punch list prior to City Council consideration.

- A letter of recommendation from the City's Consulting Engineer to the City Council will again be required. This letter will document the project has completed its final inspection after the one year maintenance period, confirm the project is in compliance with the plans and specifications, the as-built drawings are properly executed and on file. The letter will be to recommend final acceptance of the infrastructure by the City Council and the release of the Maintenance Bond.

Conclusion

It is the purpose of these procedures to provide predictable criteria for the City, developers and contractors alike to follow. These procedures may be amended from time to time. All developers/contractors are urged to seek the most up to date copy of these procedures prior to beginning the planning process for developments that will have publicly operated and/or maintained infrastructure.

Adopted this ___th day of _____, 2018, by the City Council of the City of La Marque.

_____	_____
City Secretary	**Mayor**

APPENDIX A

STANDARD CONSTRUCTION DETAILS

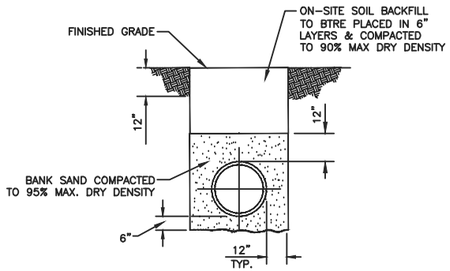

WATER

1 TYPICAL TRENCH SECTION IN GRADED AREA

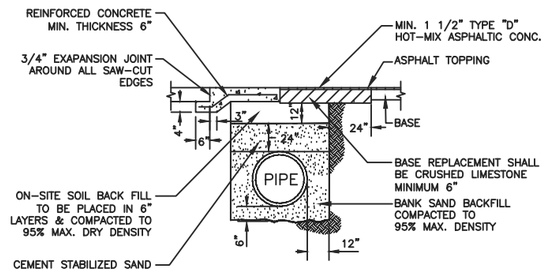

WATER

2 TYPICAL TRENCH SECTION IN PAVED AREA

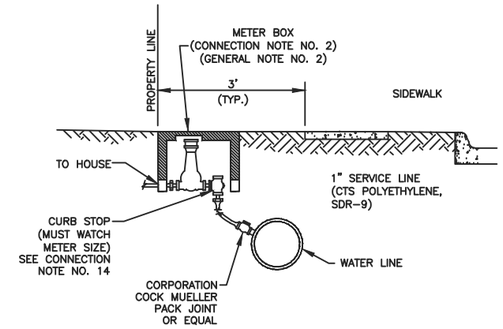

3 WHEN SERVICE METER IS NEAR WATER MAIN

GENERAL NOTES

1. PRESSURE TEST OF ALL WATER LINES SHALL BE AT 125 PSI FOR A DURATION OF 8 HOURS OR 150 PSI FOR 4 HOURS.
2. ALL WATER METER BOXES SHALL BE NDS MODEL NO. D15AMR2-DISB OR APPROVED EQUAL. (BOX NEEDS TO BE COMPATIBLE TO NEPTURE PRO-READ.) LOCKING LIDS WILL NOT BE ACCEPTED.
3. PROVIDE "UNI-FLANGE", "CERTA-LOK". OR APPROVED EQUAL PIPE RESTRAINT AND CASING SYSTEM ON UNDERGROUND PRESSURE PIPE SYSTEMS
4. ALL WATER TAPS SHOULD BE PLACED IN LINE WITH PROPERTY CORNER OR PLACED HALF WAY BETWEEN THE FRONT LOT CORNERS, OR AT PC OF CURB RETURN IN MULTI LOT SUBDIVISIONS.

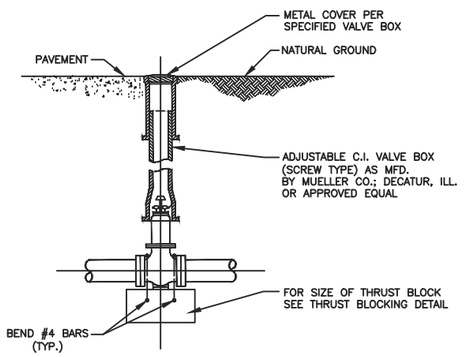

4 VALVE BOX

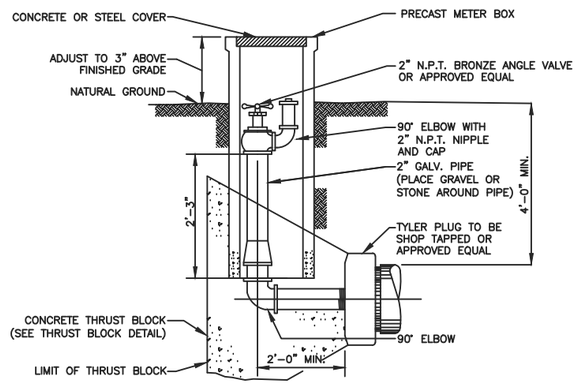

5 2" BLOW OFF VALVE ASSEMBLY

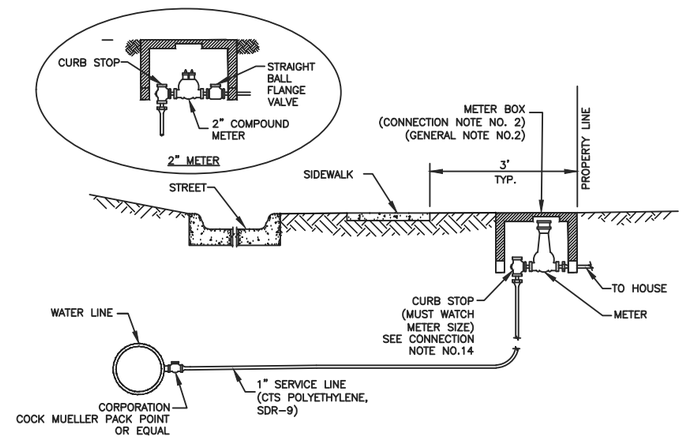

6 WHEN SERVICES CROSS PAVED STREET

SERVICE CONNECTION DETAILS

NOTES:
1. THE WATER MAIN SHALL HAVE A MINIMUM COVER OF 48" BELOW TOP OF CURB GRADE
2. THE WATER SERVICE LINES THAT ARE INSTALLED BEFORE THE COMPLETION OF STREET CONSTRUCTION SHALL BE LAID IN THE SERVICE DITCH AT THE SAME ELEVATION AS THE WATER MAIN OR A MINIMUM COVER OF 48" BELOW TOP OF CURB GRADE. AT THE PROPER LOCATION FOR THE METER BOX, THE METER (CURB) STOP SHALL BE RAISED TO 18" BELOW TOP OF CURB GRADE WITH ENOUGH EXCESS TUBING TO RAISE THE STOP AT A FUTURE DATE TO 6" BELOW TOP OF CURB GRADE.
3. LOCATOR WIRE TO PLACED ON ALL MAINS AND SERVICES. (MIN. 20 GA. COPPER)
4. SINGLE METER SERVICE LINES SHALL BE 1" MIN. I.D., C.T.S. POLYETHYLENE, SRD-9.
5. CONTRACTOR TO FURNISH AND INSTALL DOUBLE SERVICE METER BOXES AT FINISH GRADE.
6. FIRE HYDRANT ASSEMBLIES SHALL NORMALLY BE LOCATED THREE FEET BEHIND BACK OF CURB, DEFLECT WATERLINES AS NECESSARY TO MAINTAIN THREE FOOT CLEARANCE. REQUIRED ASSEMBLY SHALL INCLUDE ONE LINE SIZE BY SIX INCH TEE, ONE SIX INCH GATE VALVE AND BOX, ONE FIRE HYDRANT AND SIX INCH LEAD PIPING AND TIE BACKS.
7. WATER VALVES ON MAIN LINES SHALL BE LOCATED AS CLOSE AS POSSIBLE TO EXTENDED PROPERTY LINE AND SHALL CONFORM TO AWWA C-500, OPEN LEFT, EQUIPPED WITH 2" SQUARE OPERATING NUT.
8. WATERLINES 4 INCH THOUGH 12 INCH I.D. SHALL COMPLY WITH THE REQUIREMENTS OF AWWA STANDARD C-900 CLASS 150, SDR-18 WITH CAST IRON OUTSIDE DIAMETER.
9. ALL CONCRETE THRUST BLOCKING SHALL BE PLACED TO FORM A SOLID CONNECTION BETWEEN FITTINGS, VALVES, AND FIRE HYDRANTS AND UNDISTURBED EARTH. CONCRETE FOR THRUST BLOCKING SHALL HAVE A MINIMUM OF 2500 P.S.I. COMPRESSIVE STRENGTH AT 28 DAYS.
10. GRAY IRON AND DUCTILE IRON FITTINGS SHALL CONFORM TO AWWA C-110 AND END JOINTS OF FITTINGS AND MAIN LINE VALVES SHALL CONFORM TO AWWA C-111 FOR RUBBER GASKETED JOINTS. GRAY IRON AND DUCTILE IRON FITTINGS SHALL BE CEMENT LINED OR EPOXY COATED.
11. ALL FIRE HYDRANTS AND VALVE BOXES ARE TO BE ADJUSTED TO FINISH GRADE AFTER PAVING IS COMPLETE.
12. INSTALL CONCRETE BLOCK BENEATH FIRE HYDRANTS BEFORE PLACING CONCRETE THRUST BLOCKING TO INSURE THAT FIRE HYDRANTS ARE INSTALLED LEVEL.
13. CONTRACTOR SHALL NOTIFY CITY ENGINEER 72 HOURS BEFORE START OF CONSTRUCTION.
14. RIGHT ANGLE CURB STOPS MADE BY FORD, OR APPROVED EQUAL, SHALL BE USED. (SINGLE SERVICE: FORD BA43-342W OR EQUIVALENT, DOUBLE SERVICE: FORD UAVB43-42W OR EQUIVALENT). ONLY PACK JOINT CURB STOPS ARE PERMITTED.
15. WATER MANIFOLDS ARE NOT PERMITTED (EXCLUDING 1 INCH WATER SERVICES WITH 1 INCH U-BRANCH ASSEMBLY.
16. WATER TAPS SHALL HAVE A MINIMUM OF 24 INCH SEPARATION BETWEEN TAPS ON THE MAIN WATER LINE.

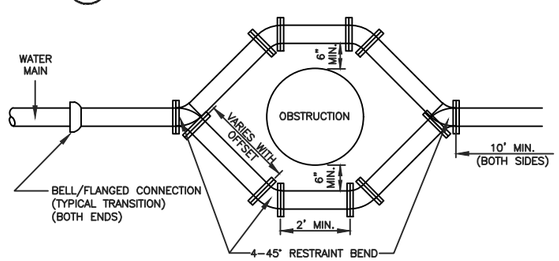

FOR A LINE TO PASS OVER AN OBSTRUCTION RATHER THAN UNDER, IT MUST HAVE ADEQUATE OVER AND BE APPROVED BY THE ENGINEERING DEPARTMENT

MIN. PIPE WALL THICKNESS	
4"	– 0.250"
6"	– 0.280"
8"	– 0.322"
12" AND LARGER	– 0.375"

NOTES:
1. PIPE MATERIAL SHALL BE AWWA C900 PVC, DR-14, 200 PSI WITH INTEGRAL PVC RESTRAINED JOINTS.
2. OFFSET ASSEMBLY MUST PASS OVER THE OBSTRUCTION AS LONG AS THE MINIMUM CLEARANCE IS MAINTAINED. SPECIFIC APPROVAL FROM THE UTILITIES DEPARTMENT MUST BE GRANTED FOR THE OFFSET TO PASS UNDER THE OBSTRUCTION.
3. MATERIAL AND COATINGS SHALL BE IN ACCORDANCE WITH WATER MAIN STANDARD SPECIFICATIONS.
4. RESTRAIN EXISTING PIPING BEYOND OFFSET SECTION AS REQUIRED TO PREVENT MOVEMENT.
5. ALL PVC PRODUCTS MUST BE LISTED ON CITY OF LA MARQUE'S APPROVED PRODUCTS LIST.

7 OFFSET ASSEMBLY

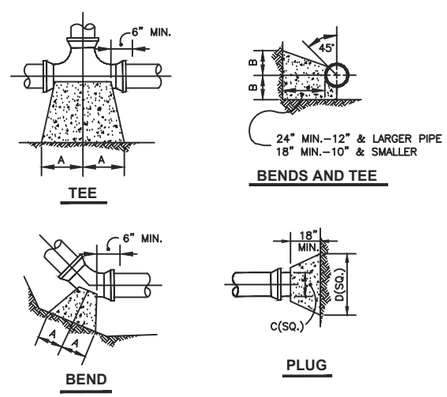

8 THRUST BLOCKING DETAIL

SIZE	90° BEND		45° BEND		22½° BEND		TEES		PLUGS	
	A	B	A	B	A	B	A	B	C	D
4"/6"	16"	10"	9"	10"	6"	8"	10"	12"	10"	21"
8"	22"	13"	12"	13"	8"	10"	13"	16"	12"	29"
10"	26"	17"	14"	17"	10"	13"	16"	20"	14"	36"
12"	29"	21"	16"	21"	11"	16"	18"	24"	16"	41"
14"	35"	24"	19"	24"	12"	20"	22"	27"	18"	48"
16"	38"	27"	21"	27"	12"	24"	24"	30"	20"	54"
18"	42"	30"	24"	30"	12"	24"	24"	30"	24"	60"
24"	50"	40"	30"	40"	18"	30"	30"	40"	30"	*78"
30"	60"	48"	36"	48"	20"	36"	36"	48"	36"	*96"

NOTE : DIMENSION WITH ASTERISK (*) REQUIRES STRUCTURAL DESIGN

NO.	REVISIONS	DATE	NAME

CITY OF LA MARQUE, TEXAS
STANDARD DETAILS

172

FOR INTERIM REVIEW ONLY

DOCUMENT INCOMPLETE: NOT INTENDED FOR CONSTRUCTION, BIDDING, OR PERMIT PURPOSES

ENGINEER: XXXX
P.E. SERIAL No. XXXX
DATE: XXX

PROJECT TITLE:

DRAWN BY: D.P.D.
CK'D BY: D.V.H.
SHEET DESCRIPTION: WATERLINE DETAILS – 1
SCALE: N.T.S.
DATE:
APPROVED BY:
SHEET NO: /

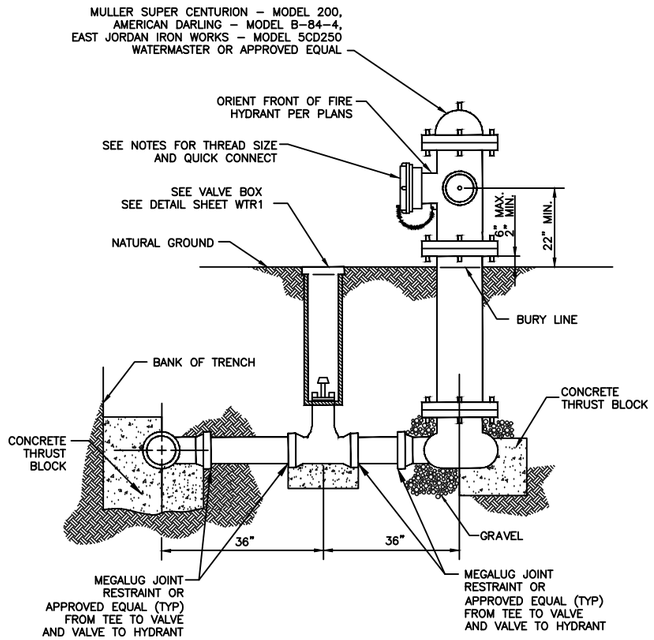

1 **FIRE HYDRANT**

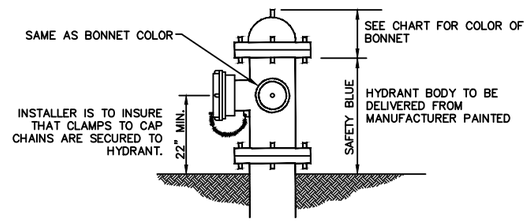

COLOR CODE

FIRE HYDRANT BARREL	SAFETY RED (225A123)
FIRE HYDRANT CAPS	SAME AS BONNET COLOR

COLOR CODE (BONNETS AND CAPS)

MAIN SIZE	
6"	GLOSS WHITE CODE NO. 225A100
8"	SAFETY ORANGE CODE NO. 225A122
10" AND 12"	JOHN DEERE GREEN CODE NO. 225A133
16" AND 20"	JOHN DEERE YELLOW CODE NO. 225A138
22" AND UP	SAFETY RED CODE NO. 225A123

2 **FIRE HYDRANT - COLOR CODE**

NOTES:

1. PRESSURE TEST OF ALL WATER LINES SHALL BE AT 125 PSI FOR DURATION OF 8 HOURS OR 150 PSI FOR 4 HOURS.
2. FIRE HYDRANT THREAD SIZE: PUMPER CONNECTION 4-492 SIZE=4.492".
3. PROVIDE "UNI-FLANGE" OR APPROVED EQUAL PIPE RESTRAINT AND CASING SYSTEM ON UNDERGROUND PRESSURE PIPE SYSTEMS.
4. FIRE HYDRANT ASSEMBLIES SHALL NORMALLY BE LOCATED THREE FEET BEHIND BACK OF CURB, DEFLECT WATERLINES AS NECESSARY TO MAINTAIN THREE FOOT CLEARANCE. REQUIRED ASSEMBLY SHALL INCLUDE ONE LINE SIZE BY SIX INCH TEE, ONE SIX INCH GATE VALVE AND BOX, ONE FIRE HYDRANT AND SIX INCH LEAD PIPING AND TIE BACKS.
5. ALL CONCRETE THRUST BLOCKING SHALL BE PLACED TO FORM A SOLID CONNECTION BETWEEN FITTINGS, VALVES, AND FIRE HYDRANTS AND UNDISTURBED EARTH. CONCRETE FOR THRUST BLOCKING SHALL HAVE A MINIMUM OF 2500 P.S.I. COMPRESSIVE STRENGTH AT 28 DAYS.
6. INSTALL CONCRETE BLOCK BENEATH FIRE HYDRANTS BEFORE PLACING CONCRETE THRUST BLOCKING TO INSURE THAT FIRE HYDRANTS ARE INSTALLED LEVEL.
7. ALL FIRE HYDRANTS AND VALVE BOXES ARE TO BE ADJUSTED TO FINISH GRADE AFTER PAVING IS COMPLETE.
8. ALL FIRE HYDRANTS ARE TO BE EQUIPPED WITH HYDRA-STORZ QUICK CONNECT HYDRANT SYSTEM (1/4 X 5" BASE) WITH DEBRIS CAP. MANUFACTURED BY HYDRA-SHIELD, INC. OR APPROVED EQUAL. DEBRIS CAP IS TO BE TETHERED WITH A 12" STAINLESS STEEL CABLE, UTILIZING THE EYELET ON THE FIRE HYDRANT AND THE DEBRIS CAP.
9. CONTRACTOR SHALL NOTIFY CITY ENGINEER 48 HOURS BEFORE START OF CONSTRUCTION.
10. ALL FIRE HYDRANT RESTRAINTS TO BE MJ FITTING.

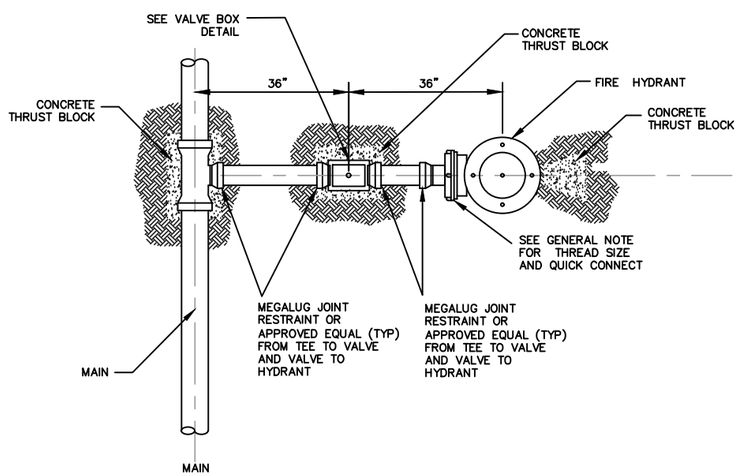

3 **FIRE HYDRANT - PLAN**

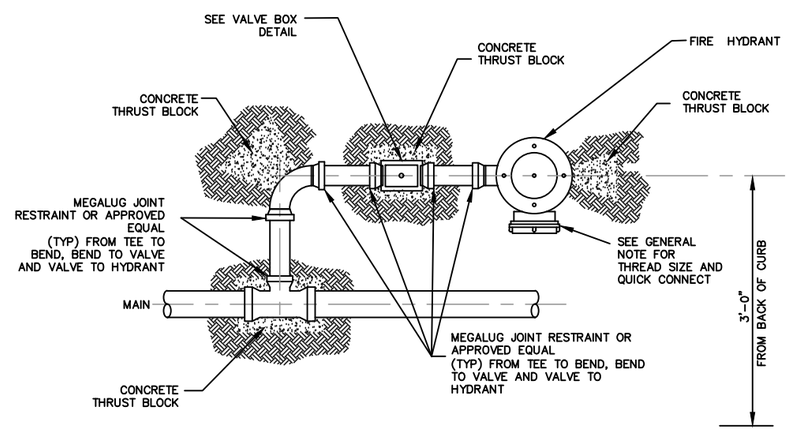

4 **ALTERNATE FIRE HYDRANT - PLAN**

NO.	REVISIONS	DATE	NAME
△			
△			
△			
△			
△			

CITY OF LA MARQUE, TEXAS
STANDARD DETAILS

FOR INTERIM REVIEW ONLY

DOCUMENT INCOMPLETE:
NOT INTENDED FOR CONSTRUCTION, BIDDING, OR PERMIT PURPOSES

ENGINEER: xxxx
P.E. SERIAL No. xxxx
DATE: xxx

PROJECT TITLE:

DRAWN BY: D.P.D.

CK'D BY: D.V.H.

SHEET DESCRIPTION: WATERLINE DETAILS – 2

SCALE: N.T.S.

DATE:

APPROVED BY:

SHEET NO: /

SANITARY SEWER SYSTEM CONSTRUCTION NOTES

1. FINISHED ELEVATION ON SANITARY SEWER MANHOLE RIMS SHALL BE THREE INCHES ABOVE FINISHED GRADE WITHIN UTILITY EASEMENTS OR STREET RIGHT-OF-WAY. CLEAN FILL SHALL BE ADDED AND SLOPED FROM MANHOLE RIM.
2. CONTRACTOR SHALL MARK LOCATION OF AND MAINTAIN RECORDS OF STUB, STACKS, AND END OF SERVICE LEAD LOCATIONS, WITH WIRE LOOPS AND 2" P.V.C. PIPE.
3. WATER LINES AND SANITARY SEWER LINES SHALL BE INSTALLED IN SEPARATE TRENCHES.
4. ALL PVC PIPE (POLYVINYL CHLORIDE) SHALL BE IN ACCORDANCE WITH ASTM D3034, SDR 26.
5. ALL PVC PIPE (ALL TYPES AND SDR/DR WALL THICKNESS TO BE USED) SHALL HAVE RUBBER GASKET EQUIPPED BELL AND SPIGOT JOINTS CONFORMING TO ASTM D-3212. THE GASKET MATERIAL SHALL CONFORM TO ASTM F-477. SOLVENT WELDED JOINTS WILL NOT BE APPROVED FOR CITY SEWER LINES.
6. ALL DUCTILE IRON PIPE SHALL BE 150 PSI. WITH EIGHT (8) MIL, BLACK VIRGIN POLYETHYLENE WRAP AS SPECIFIED IN ANSI/AWWA C105/A21.5.
7. SANITARY SEWER MATERIALS AND CONSTRUCTION SHALL BE IN ACCORDANCE WITH THE CITY OF LA MARQUE DESIGN STANDARDS. CONTRACTOR TO FURNISH TEST PLUGS AND RISERS (NO SEPARATE PAY). ALL SEWER LINES TO BE AIR TESTED IN ACCORDANCE WITH THE CONTRACT SPECIFICATIONS.
8. MAINTAIN 12-INCH MINIMUM CLEARANCE BETWEEN ALL STORM SEWERS, AND CULVERTS UNLESS OTHERWISE NOTED.
9. SEWER TRENCHES UNDER OR WITHIN ONE (1) FOOT OF PROPOSED OR FUTURE PAVEMENT TO BE BACKFILLED WITH CEMENT STABILIZED SAND BACKFILL, AS SPECIFIED, TO WITHIN ONE (1) FOOT OF SUBGRADE. BEDDING WILL BE CLASS "AA" WHERE CEMENT STABILIZED SAND C PER LINEAR FOOT OF PIPE.
10. WATER LINE/SANITARY MANHOLE AND SANITARY SEWER SEPARATION. UNLESS SANITARY SEWER MANHOLES AND THE CONNECTING SEWER CAN BE MADE WATERTIGHT AND TESTED FOR NO LEAKAGE, MUST BE INSTALLED SO AS TO PROVIDE A MINIMUM OF NINE FEET OF HORIZONTAL CLEARANCE FROM AN EXISTING OR PROPOSED WATERLINE. WHERE THE NINE FOOT SEPARATION DISTANCE CANNOT BE ACHIEVED, FOLLOW THESE SPECIAL PROCEDURES:
    a) WHERE A SEWER CROSSES A WATERLINE ALL PORTIONS OF THE SEWER WITHIN NINE FEET OF THE WATERLINE SHALL BE CONSTRUCTED OF DUCTILE IRON (AWWA C151, 150 PSI, THK. CL. 50), OR PVC PIPE WITH A PRESSURE RATING OF AT LEAST 150 PSI USING APPROPRIATE ADAPTERS. VERTICAL CLEARANCE BETWEEN PIPES SHALL BE AT LEAST 2' IF SEWER IS ABOVE THE WATERLINE AND 6" IF THE SEWER IS BELOW THE WATERLINE.
    b) SANITARY SEWER LINES CROSSING UNDER PROPOSED OR FUTURE WATER LINES WITH GREATER THAN SIX INCHES VERTICAL WALL-TO-WALL CLEARANCE BUT LESS THAN TWO FEET OF VERTICAL WALL-TO-WALL CLEARANCE SHALL HAVE ONE EIGHTEEN-FOOT JOINT OF A SPECIFIED DUCTILE IRON PIPE (AWWA C151, 150 PSI. THK. CL. 50) CENTERED ON THE WATER LINE CROSSING.
    c) SANITARY SEWER LINES CROSSING UNDER PROPOSED OR FUTURE WATER LINES WITH GREATER THAN TWO FEET OF VERTICAL BUT LESS THAN NINE FEET OF VERTICAL WALL-TO-WALL CLEARANCE SHALL BE BACKFILLED FOR NINE HORIZONTAL FEET OF WATER LINE ON EACH SIDE OF SEWER LINE WITH CEMENT SAND (MINIMUM 2 SACKS CEMENT PER CUBIC YARD OF SAND) TO A DEPTH OF ONE PIPE DIAMETER OR TWELVE INCHES (WHICHEVER IS GREATER) ABOVE THE SEWER LINE.
    d) WHERE A SANITARY SEWER PARALLELS A WATERLINE, THE SEWER MUST BE INSTALLED IN A SEPARATE TRENCH, AND SHALL BE CONSTRUCTED OF CAST IRON, DUCTILE IRON OR PVC PIPE MEETING ASTM SPECIFICATIONS WITH A PRESSURE RATING FOR BOTH THE PIPE AND JOINTS OF 150 PSI. THE VERTICAL SEPARATION SHALL BE A MINIMUM OF TWO FEET BETWEEN OUTSIDE DIAMETERS AND THE HORIZONTAL SEPARATION SHALL BE A MINIMUM OF FOUR FEET BETWEEN OUTSIDE DIAMETERS. THE SEWER SHALL BE LOCATED BELOW THE WATERLINE.
11. ALL PROPOSED GRAVITY SANITARY SEWER LINES SHALL BE DUCTILE IRON OR SDR 26 PVC PIPE. NON-PRESSURE PVC MAY NOT BE SUBSTITUTED FOR D.I.P. OR C-900 (DR 18 ONLY) PVC.
12. BEDDING FOR ALL TYPES OF SANITARY SEWER PIPE SHALL BE CLASS "AA" AT ALL DEPTHS (NO SEPARATE PAY).
13. FOR ALL PVC PIPE, USE MANHOLE WATER STOP GASKET AND CLAMP ASSEMBLY AT MANHOLE CONNECTIONS (NO SEPARATE PAY).
14. SANITARY SEWER MANHOLES SHALL BE STANDARD TYPE, UNLESS OTHERWISE NOTED, AND BACKFILLED WITH CEMENT STABILIZED SAND AS SPECIFIED (NO SEPARATE PAY). ALL SANITARY MANHOLES SHALL BE AT LEAST 1 FOOT ABOVE THE 100 YEAR BASE FLOOD ELEVATION. SECTIONS FOR PRECAST MANHOLES SHALL BE JOINED WITH RUBBER GASKET JOINTS. "RAM NEK" OR SIMILAR WILL NOT BE APPROVED.
15. ALL FAR-SIDE LEADS SHALL BE SIX (6) INCHES OR EIGHT (8) INCHES DIAMETER AT 0.70% MIN. SLOPE AND SHALL BE PVC, SDR 26, 150 PSI PRESSURE PIPE CONFORMING TO ASTM D-2241. STUBS AND FAR-SIDE LEADS WILL BE D.I.P., 150 PSI, THICKNESS CL. 51, WHERE THERE IS LESS THAN THREE (3) FOOT COVER TO TOP OF CURBS (NO SEPARATE PAY).
16. LEADS SERVING TWO LOTS SHALL HAVE A SERVICE "WYE" WITH PLUGS (NO SEPARATE PAY). THE "WYE" SHALL BE LOCATED WITHIN THE STREET RIGHT-OF-WAY OR ADJOINING UTILITY EASEMENT.
17. ALL PRECAST CONCRETE MANHOLES SHALL HAVE THE TOP 18 INCHES CONSTRUCTED OF STEEL OR PRECAST PCC RINGS, SEALED INSIDE AND OUTSIDE.
18. SANITARY SEWER LINE IN PIPE ZONE IN SIDE LOT EASEMENT SHALL BE BACKFILLED WITH CEMENT STABILIZED SAND. (NO SEPARATE PAY).
19. IF WET SAND IS ENCOUNTERED IN THE FIELD, USE SPECIAL BEDDING.
20. USE WHITE PIPE FOR ALL FORCE MAINS.
21. PROVIDE "UNI-FLANGE", "CERTA-LOK", OR APPROVED EQUAL PIPE RESTRAINT AND CASING SYSTEM ON UNDERGROUND PRESSURE PIPE SYSTEMS.

SPECIAL NOTES: LOCATION OF SANITARY SEWER FACILITIES

IF STAKES ARE LEFT IN THE GROUND AT THE STACK AND LEADS AFTER CONSTRUCTION OF UTILITIES, THEN AN EFFORT WILL BE MADE TO PRESERVE THEM DURING PAVING C UTILITY CONTRACTOR REMAINS RESPONSIBLE FOR LOCATING AND MARKING THE FACILITIES AS DESCRIBED BELOW.

THE CONTRACTOR IS RESPONSIBLE FOR PROVIDING AS-BUILT RED LINES AND FLOW LINE ELEVATIONS OF ALL SERVICE CONNECTIONS AND SHALL BE PLACED ON AS BUILT PLANS AT THE COMPLETION OF THIS JOB.

THE UTILITY CONTRACTOR IS RESPONSIBLE FOR LOCATING AND MARKING ALL STACKS AND FAR SIDE LEADS AFTER THE PAVING IN THIS SECTION IS COMPLETE. A 1/4-INCH DEEP NOTCH SHALL BE CUT IN THE CURB AND PAINTED WITH A RED LINE ADJACENT TO THE STACK OR LEAD.

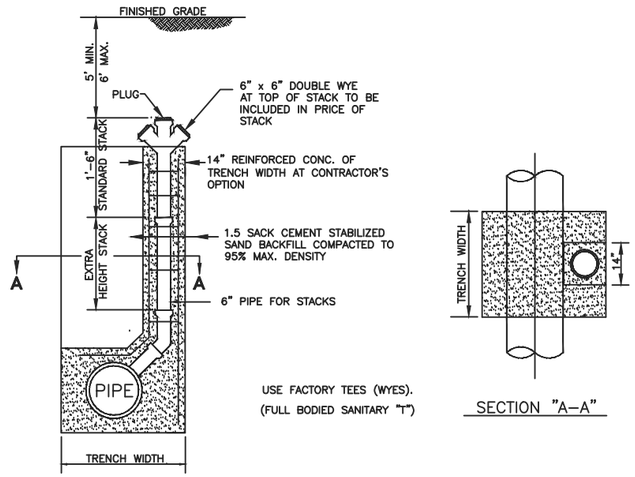

1 SANITARY SEWER STACK

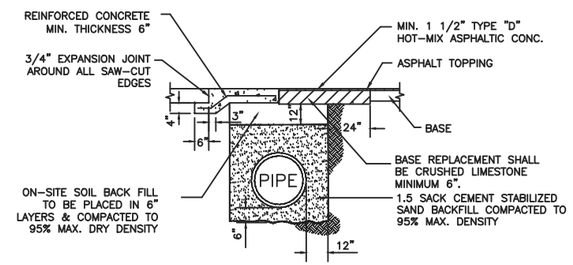

2 TRENCH SECTION IN PAVED AREA

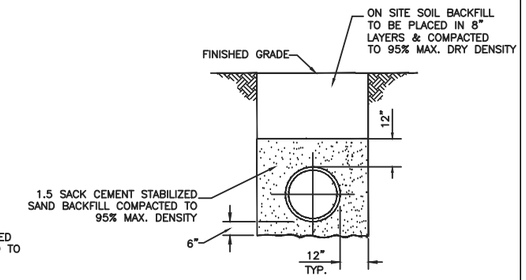

3 AA PIPE BEDDING DETAIL
SANITARY SEWER

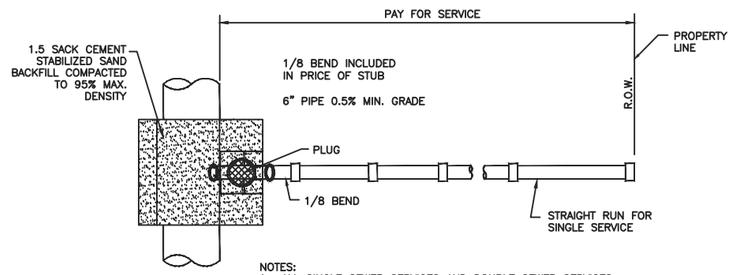

NOTES:
1. ALL SINGLE SEWER SERVICES AND DOUBLE SEWER SERVICES, AS SHOWN, ARE INTERCHANGEABLE, AS REQUIRED, TO CONNECT WITH STACKS, DOUBLE WYES AND WYES, AS REQUIRED, TAPS FOR PVC PIPE TO BE PVC "T" OR "Y".
2. PROVIDE LOCATOR WIRE LOOPS FROM EACH SERVICE CONNECTION TO NEAREST MANHOLE.

4 SINGLE SEWER SERVICE

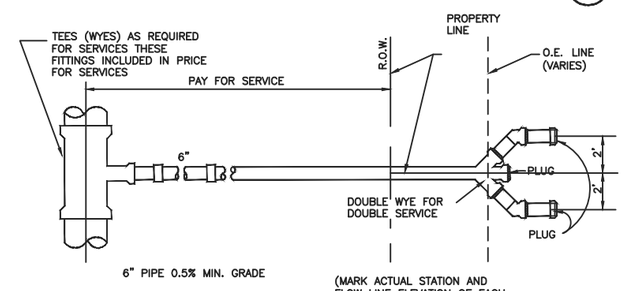

1. ALL SANITARY SEWER SERVICES WILL BE BROUGHT TO WITHIN 4 TO 6 FEET OF FINISHED LOT GRADE ELEVATION AT PROPERTY LINE (RIGHT OF WAY).
2. SEWER SERVICE LEADS SHALL NOT BE BACKFILLED UNTIL VISUALLY INSPECTED BY CITY INSPECTOR.

5 DOUBLE SEWER SERVICE

NOTES:

1. ALL SANITARY SEWER TAPS SHOULD BE PLACED IN LINE WITH PROPERTY CORNER OR PLACED HALF WAY BETWEEN THE FRONT LOT CORNERS, OR AT PC OF CURB RETURN IN MULTI LOT SUBDIVISIONS.
2. NECESSITY FOR USE OF THIS SECTION TO BE DETERMINED BY THE ENGINEER AS CONSTRUCTION PROGRESSES AND MAY BE MODIFIED BY TO SUIT CONDITIONS ENCOUNTERED.
3. WELL POINTS TO BE INSTALLED AND TRENCH KEPT DRY DURING CONSTRUCTION UNTIL BACKFILL IS COMPLETELY PLACED AND ENOUGH TIME AS APPROVED BY ENGINEER HAS ELAPSED.

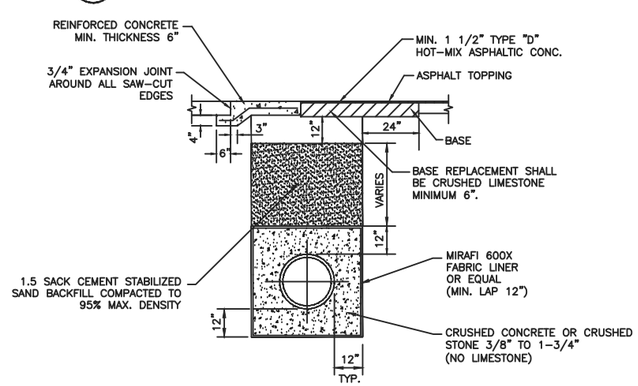

6 BEDDING AND BACKFILL FOR WET SAND
UNDER PAVEMENT

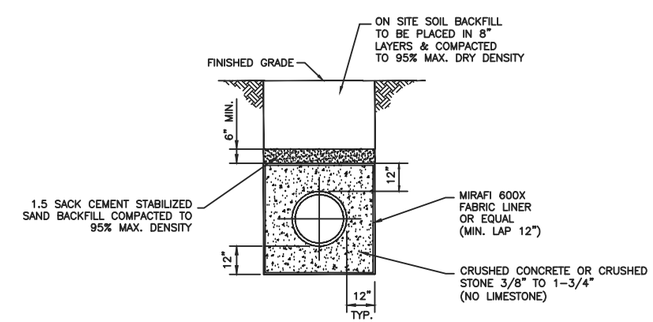

7 BEDDING AND BACKFILL FOR WET SAND

NO.	REVISIONS	DATE	NAME
△			
△			
△			
△			
△			

CITY OF LA MARQUE, TEXAS
STANDARD DETAILS

FOR INTERIM REVIEW ONLY

DOCUMENT INCOMPLETE:
NOT INTENDED FOR CONSTRUCTION, BIDDING, OR PERMIT PURPOSES

ENGINEER: xxxx
P.E. SERIAL No. xxxx
DATE: xxx

PROJECT TITLE:
DRAWN BY: D.P.D.
CK'D BY: D.W.H.
SHEET DESCRIPTION: SANITARY SEWER DETAILS – 1
SCALE: N.T.S.
DATE:
APPROVED BY:
SHEET NO: /

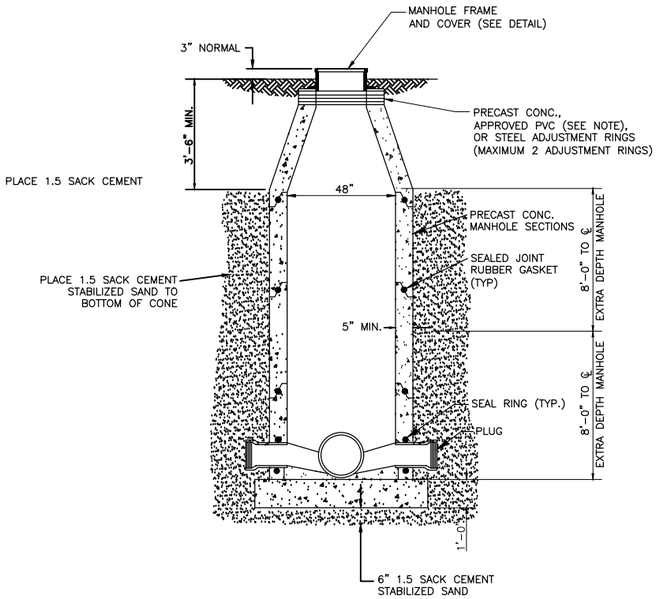

NOTES:
1. ALL MANHOLES IN WET SAND REQUIRE SPECIAL DESIGN
2. H.D.P.E. ADJUSTMENT RINGS AS MANUFACTURED BY LADTECH, INC. OR APPROVED EQUAL.
3. HORSE-SHOE SHAPED PIPE OPENINGS OR BREAKOUT PIPE OPENINGS WILL NOT BE ACCEPTED

1 STANDARD PRECAST CONCRETE SEWER MANHOLE

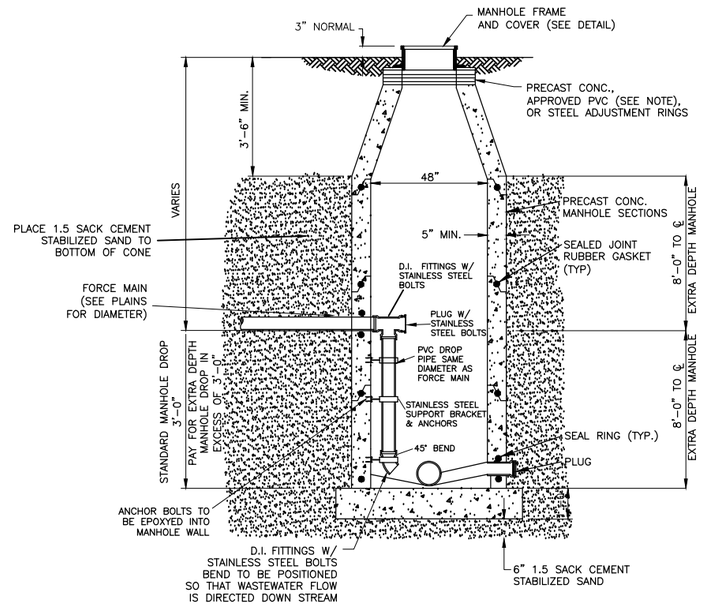

NOTE:
1. MANHOLE MUST BE CORED TO APPROPRIATE OPENING.
2. WATER TIGHT GASKET MUST BE USED TO SEAL PIPE TO MANHOLE.
3. ALL PIPE FITTINGS TO BE 1 (ONE) BOLT TYPE RESTRAINT FITTINGS OR APPROVED EQUAL.
4. USE STAINLESS STEEL ANCHOR TO ATTACH PIPE SUPPORTS TO WALL.
5. PIPE SUPPORTS MUST BE STAINLESS STEEL (3' MAX SPACING).
6. INTERIOR SURFACE OF THE MANHOLE SHALL BE COATED WITH A MINIMUM 80 MILS THICKNESS OF NEOPOXY, NPR 5300 SERIES, OR RAVEN LINING SYSTEMS, RAVEN-405.
7. INSIDE FORCE MAIN DROP 8" OR LESS ALLOWED 4' STANDARD MANHOLE.
8. INSIDE FORCE MAIN DROP LARGER THAN 8" MUST BE APPROVED BY CITY ENGINEER.
9. GRAVITY LINES 10 INCHES OR LESS, THE INTERNAL DROP WILL BE USED WITH A STANDARD 4 FOOT DIAMETER MANHOLE. GREATER THAN 10 INCHES WILL REQUIRE A 6 FOOT DIAMETER MANHOLE.

2 STANDARD PRECAST CONCRETE SEWER MANHOLE AND INTERNAL DROP / INTERNAL DROP FOR FORCEMAN

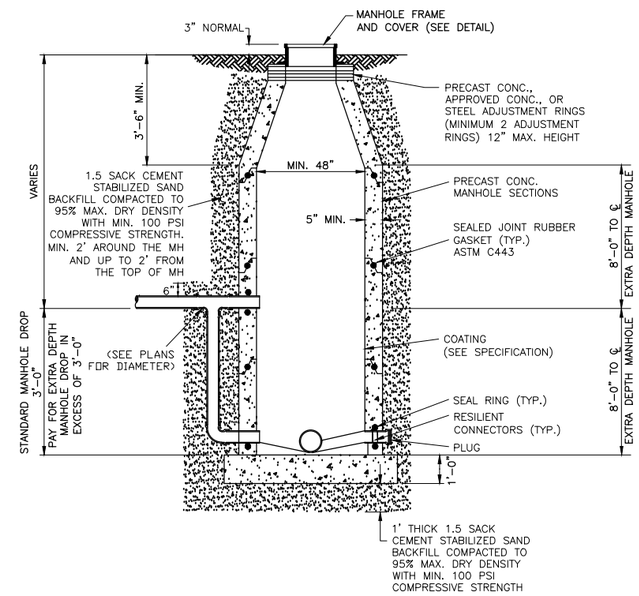

NOTE:
1. POURED-IN-PLACE OR PRE-CAST MANHOLES ONLY SHALL BE USED.
2. NO BRICKS OF ANY KIND WILL BE ALLOWED IN CONSTRUCTION OF MANHOLES.
3. MANHOLES SHOULD BE PLACED HALF WAY BETWEEN THE FRONT LOT CORNERS IN MULTI-LOT SUBDIVISION.

NOTE:
1. FOR ALL NEW CONSTRUCTION.
2. CLASS 1 CONCRETE WITH A DESIGN STRENGTH OF 4000 PSI AT 28 DAYS. RATES FOR H-20 LOADING.
3. PRECAST CONCRETE MANHOLE CONFORMING TO ASTM C478. STRUCTURAL REINFORCEMENT CONFORMING TO ASTM 615A.
4. LIFTING INSERTS AS REQUIRED.
5. ALL JOINTS SHALL BE SEALED WITH APPROVED GASKET.
6. MANHOLE MUST BE CORED TO APPROPRIATE OPENING.
7. WATER TIGHT GASKET MUST BE USED TO SEAL PIPE TO MANHOLE.
8. ALL PIPE FITTINGS TO BE 1 (ONE) BOLT TYPE RESTRAINT FITTINGS OR APPROVED EQUAL.
9. PIPE SUPPORTS MUST BE STAINLESS STEEL (3' MAX SPACING).
10. ALL MANHOLES IN OPEN DITCH SHALL HAVE HINGED FRAME AND COVER (SEE DETAIL)
11. ALL MANHOLES ABOVE GRADE SHALL HAVE REVOLUTION ASSEMBLY RIM AND COVER (SEE DETAIL SHEET 3 OF 3)
12. ALL MANHOLES IN PAVED AREAS SHALL HAVE BLOCK OUT (SEE MISC. DETAIL SHEET).
13. VACUUM TEST SHALL BE COMPLETED PRIOR TO COATING OF THE MANHOLE.

3 STANDARD PRECAST CONCRETE SEWER MANHOLE AND EXTERNAL DROP

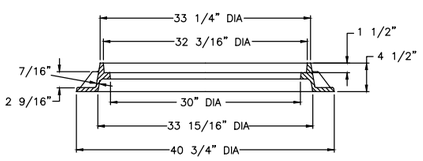

NOTES:
1. MANHOLE FRAME AND COVER TO BE EAST JORDAN IRON WORKS PATTERN, OR OTHER APPROVED EQUAL. WHERE SEWER IS LOCATED IN EASEMENTS, CONTRACTOR MAY USE LIGHTWEIGHT F AND C, APPROVED BY THE ENGINEER.
2. STAINLESS STEEL INFLOW PREVENTERS MADE BY KoLo, INC., OR APPROVED EQUAL, SHALL BE USED ON ALL SANITARY SEWER MANHOLES.

4 31-7/8" MANHOLE COVER AND FRAME

NO.	REVISIONS	DATE	NAME
△			
△			
△			
△			
△			

CITY OF LA MARQUE, TEXAS
STANDARD DETAILS

175

FOR INTERIM REVIEW ONLY

DOCUMENT INCOMPLETE:
NOT INTENDED FOR CONSTRUCTION, BIDDING, OR PERMIT PURPOSES

ENGINEER: xxxx
P.E. SERIAL No. xxxx
DATE: xxx

PROJECT TITLE:

DRAWN BY: D.P.D.

CK'D BY: D.V.H.

SHEET DESCRIPTION: SANITARY SEWER DETAILS – 2

SCALE: N.T.S.

DATE:

APPROVED BY:

SHEET NO: /

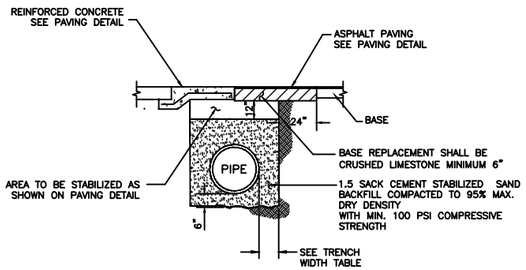

1 TRENCH SECTION FOR GRAVITY SEWER UNDER PAVEMENT

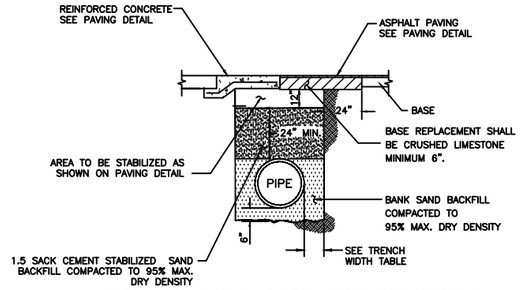

4 BEDDING AND BACKFILL FOR FORCE MAIN UNDER PAVEMENT

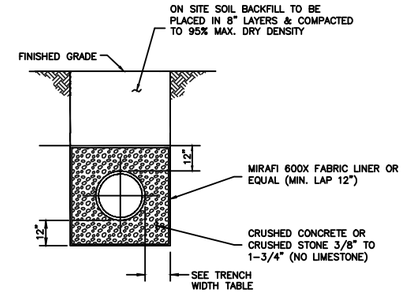

7 BEDDING AND BACKFILL FOR WET SAND GRADED AREA

NOTE:

1. ALL PVC PIPE SHALL HAVE RUBBER GASKET EQUIPPED BELL AND SPIGOT JOINTS CONFORMING TO ASTM D3212. ELASTOMERIC SEALS SHALL BE A SINGLE DOUBLE-SEALING GASKET SPANNING ONE FULL CORRUGATION WITH THE LEADING EDGE BEING LOWER THAN THE SECOND EDGE TO FACILITATE PROPER JOINING. THE GASKET MATERIAL SHALL CONFORM TO ASTM F477.
2. ALL CEMENT STABILIZED SAND BACKFILL SHALL CONFORM TO SPECIFICATION CEMENT STABILIZED SAND – SECTION 02252.
3. ALL JOINTS IN PRE-CAST CONCRETE PIPE AND BOX SHALL RECEIVE JOINT SEALANT, RAM-NEK, OR APPROVED EQUAL.
4. ALL PIPE WITHIN 1' OF PAVEMENT SHALL USE BACKFILL DETAIL FOR UNDER PAVEMENT.

TRENCH WIDTH TABLE	
NOMINAL PIPE SIZE (INCHES)	MINIMUM TRENCH WIDTH (INCHES)
LESS THAN 18	O.D. + 18
18 TO 30	O.D. + 24
GREATER THAN 30	O.D. + 36

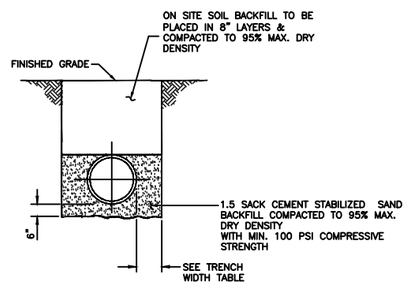

2 AA PIPE BEDDING DETAIL FOR GRAVITY SEWER GRADED AREA

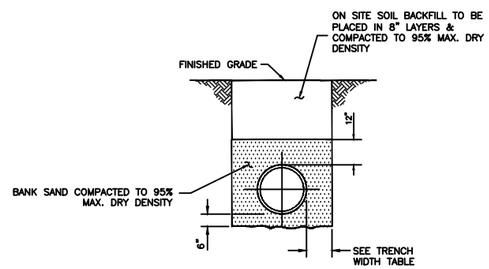

5 BEDDING AND BACKFILL FOR FORCE MAIN GRADED AREA

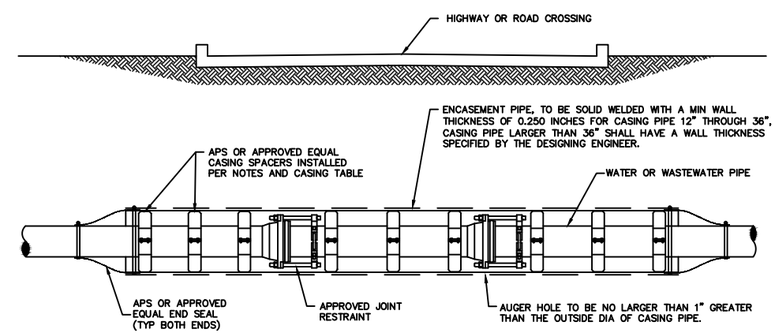

LONGITUDINAL SECTION

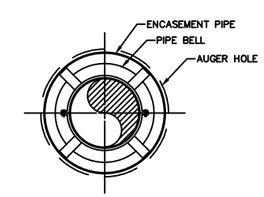

CROSS SECTION

CASING TABLE		
NOMINAL PIPE SIZE DIA IN INCHES	MIN CASING SIZE INSIDE DIA IN INCHES	MAX SKID SUPPORT SPACING IN FEET
4	12	4.7
6	12	6.3
8	16	7.4
10	18	8.5
12	20	9.6
15	22	11.0
18	26	12.0
21	30	12.0
24	33	12.0
27	36	12.0

NOTES:

1. SPACERS FOR CARRIER PIPE SHALL BE STAINLESS STEEL, NEOPRENE OR APPROVED EQUAL AND SHALL BE INSTALLED TO CENTER CARRIER PIPE WITHIN CASING WITH A MAX TOLERANCE OF ½" BETWEEN RUNNER AND CASING INSIDE AS WELL AS PREVENT THE CARRIER PIPE FROM RESTING ON THE BELLS WITHIN THE CASING. SEE CASING TABLE FOR SPACER DISTANCE AND NUMBER OF SPACERS.
2. SPACERS TO BE PLACED A MIN OF 1' BACK FROM EACH JOINT THAT FALLS WITHIN CASING, A GREATER SET BACK MAY BE REQUIRED FOR LARGER PIPE. SEE CASING TABLE FOR ADDITIONAL INFO ON SPACING OF SUPPORTS.
3. WHEN INSTALLING GRAVITY PIPE WITH CASING CONTRACTOR SHALL TAKE INTO CONSIDERATION PIPE GRADE SO THAT THE SEWER PIPE MAINTAINS THE PROPER FALL.
4. JOINT RESTRAINTS ARE REQUIRED ON ALL JOINTS THAT FALL UNDER OR WITHIN 10' OF HIGHWAY CROSSINGS REGARDLESS OF PIPE MATERIAL, CASED OR NOT.

8 STEEL PIPE CASING

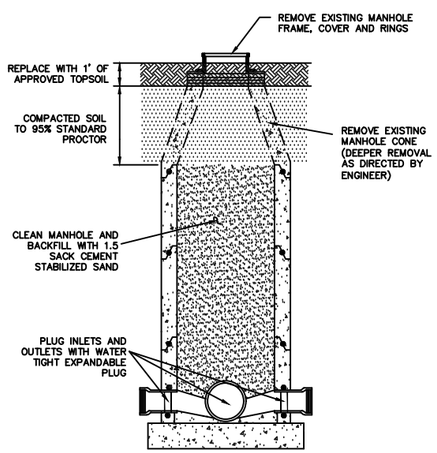

3 SANITARY SEWER MANHOLE ABANDONMENT

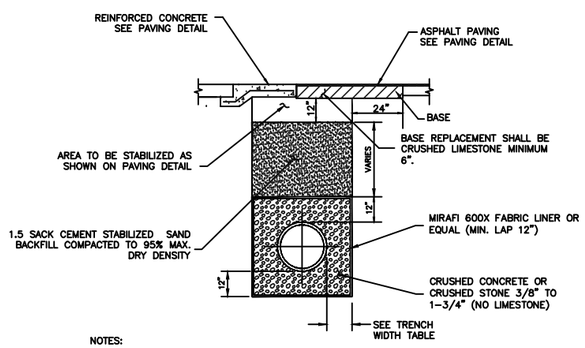

NOTES:

1. NECESSITY FOR USE OF THIS SECTION TO BE DETERMINED BY THE ENGINEER AS CONSTRUCTION PROGRESSES AND MAY BE MODIFIED BY THE ENGINEER TO SUIT CONDITIONS ENCOUNTERED.
2. WELL POINTS TO BE INSTALLED AND TRENCH KEPT DRY DURING CONSTRUCTION UNTIL BACKFILL IS COMPLETELY PLACED AS APPROVED BY ENGINEER.

6 BEDDING AND BACKFILL FOR WET SAND UNDER PAVEMENT

NO.	REVISIONS	DATE	NAME
△			
△			
△			
△			
△			

CITY OF LA MARQUE, TEXAS STANDARD DETAILS

FOR INTERIM REVIEW ONLY

DOCUMENT INCOMPLETE:
NOT INTENDED FOR CONSTRUCTION, BIDDING, OR PERMIT PURPOSES

ENGINEER: XXXX
P.E. SERIAL No. XXXX
DATE: XXX

PROJECT TITLE:		
DRAWN BY: D.P.D.		
CK'D BY: D.V.H.	SHEET DESCRIPTION: SANITARY SEWER DETAILS – 3	
SCALE: N.T.S.		SHEET NO: /
DATE:	APPROVED BY:	

EXIST TYPE "B" INLET

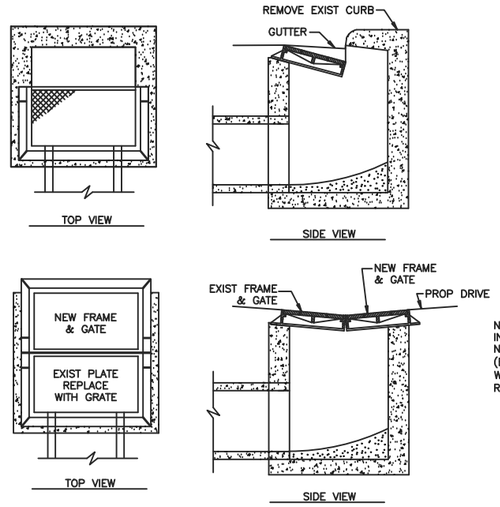

1. AFTER REMOVING EXIST CURB, RAISE EXIST FRAME TO GUTTER GRADE.
2. REPLACE EXIST PLATE WITH A GRATE.
3. ADD NEW FRAME AND GRATE NEXT TO EXIST FRAME.
4. BACKFILL INLET WITH 1 SACK/TON CEMENT STABILIZED SAND.

CONSTRUCT NEW TYPE "B-B" INLET ON CURB RETURN OF PROPOSED DRIVEWAY

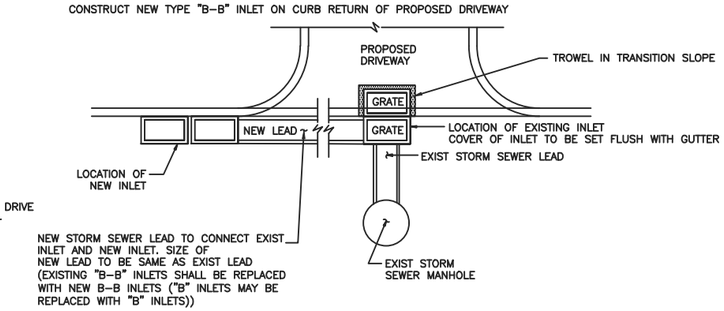

1 "B" AND "B-B" INLET REPLACEMENT

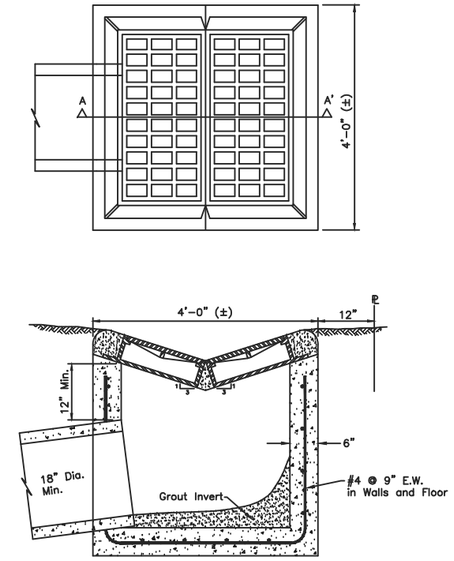

NOTES:

1. POURED-IN-PLACE OR PRE-CAST MANHOLES ONLY SHALL BE USED.
2. NO BRICKS OF ANY KIND WILL BEALLOWED IN CONSTRUCTION OF MANHOLES OR INLETS.
3. ALL PVC PIPE SHALL HAVE RUBBER GASKET EQUIPPED BELL AND SPIGOT JOINTS CONFORMING TO ASTM D3212. ELASTOMERIC SEALS SHALL BE A SINGLE DOUBLE-SEALING GASKET SPANNING ONE FULL CORRUGATION WITH THE LEADING EDGE BEING LOWER THAN THE SECOND EDGE TO FACILITATE PROPER JOINING. THE GASKET MATERIAL SHALL CONFORM TO ASTM F477.
4. FOR ALL PRE-CAST AND POURED -IN-PLACE INLETS AND JUNCTION BOXES, CENTER DOUBLE - SEALING GASKET IN WALL AND GROUT COMPLETELY AROUND PVC PIPE. GROUT SHALL BE SMOOTH AND FLUSH WITH INNER AND OUTER WALL WHEN ENTERING AT AN ANGLE TO THE WALL OR THROUGH THE CORNER OF AN INLET OR JUNCTION BOX, THE GASKET MAY BE OMITTED.

2 MAINTENANCE BERM INLET BOX

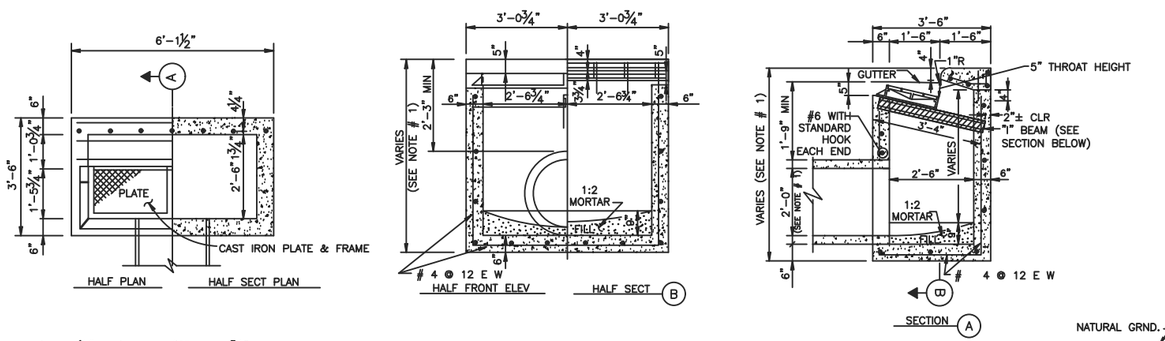

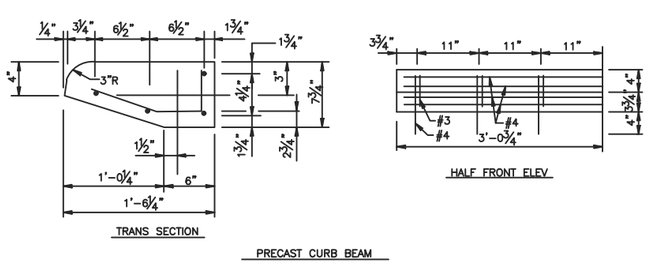

PRECAST CURB BEAM

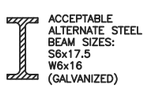

ACCEPTABLE ALTERNATE STEEL BEAM SIZES:
S6x17.5
W6x16
(GALVANIZED)

SECTION THRU BEAM

CURB BEAM BAR LIST				
NO	SIZE	LENGTH	SHAPE	LOC
4	# 4	5'-10"	ST	HOR
7	# 4	0'-10"	ST	VERT
7	# 3	1'-8"	BT	

GENERAL NOTES:

USE STD CAST IRON FRAME & PLATES. LEAD SHALL LEAVE INLET AT LOCATION AND GRADE REQUIRED.

NOTES:

1. DIMENSION VARIES BASED ON PIPE DIAMETER AND WALL THICKNESS.
2. CENTER REINFORCING IN SLAB AND WALLS.
3. CENTER STEEL BEAM ON INLET AND CAST INTO WALLS AS SHOWN.

3 "BB" INLET

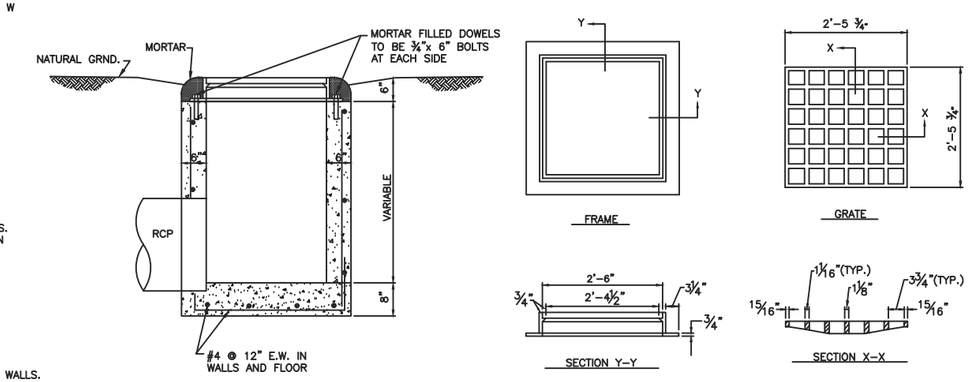

4 "A" INLET

NO.	REVISIONS	DATE	NAME

CITY OF LA MARQUE, TEXAS
STANDARD DETAILS

FOR INTERIM REVIEW ONLY

DOCUMENT INCOMPLETE: NOT INTENDED FOR CONSTRUCTION, BIDDING, OR PERMIT PURPOSES

ENGINEER: xxxx
P.E. SERIAL No. xxxx
DATE: xxx

PROJECT TITLE:

DRAWN BY: D.P.D.
CK'D BY: D.V.H.
SCALE: N.T.S.
DATE:
SHEET DESCRIPTION: STORM SEWER DETAILS – 1
APPROVED BY:
SHEET NO: /

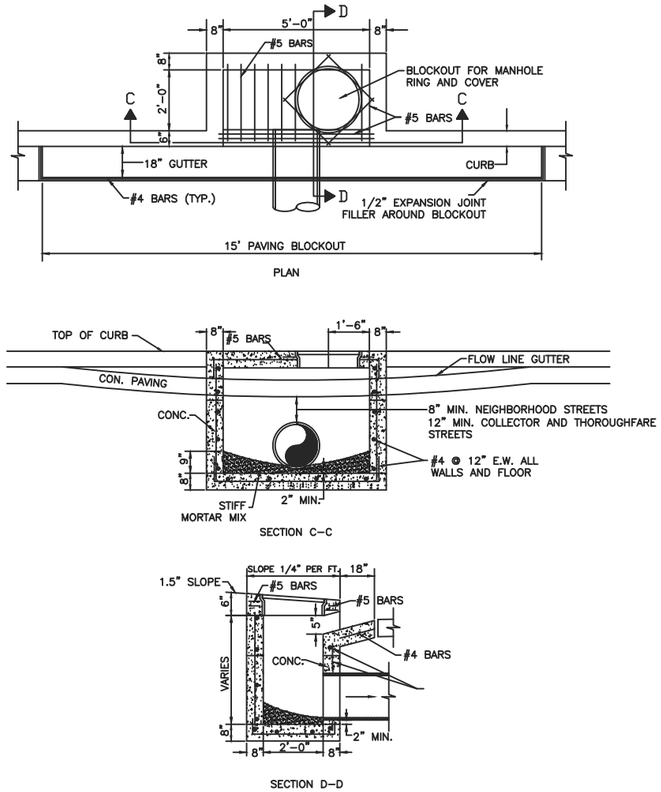

1 "C" INLET

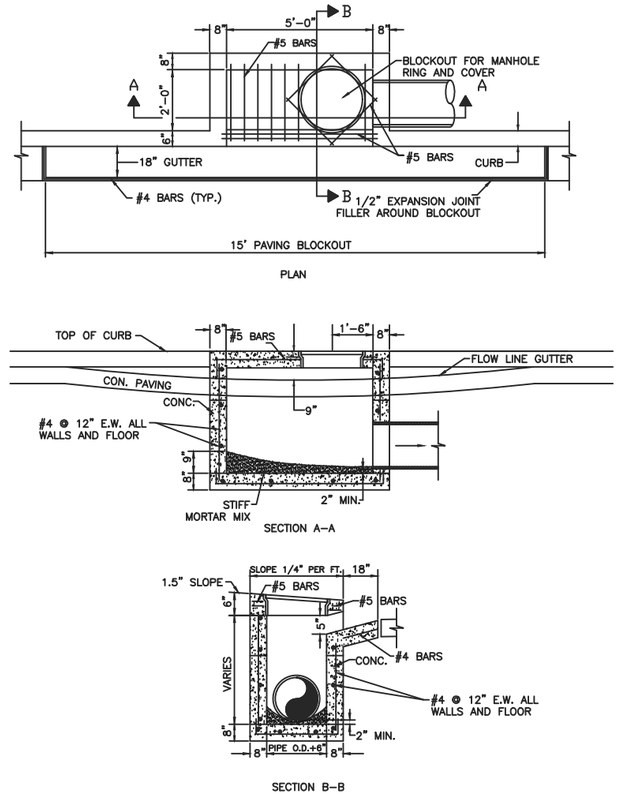

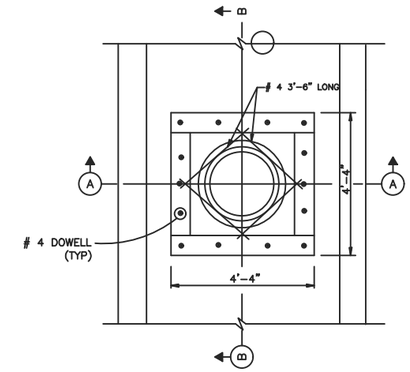

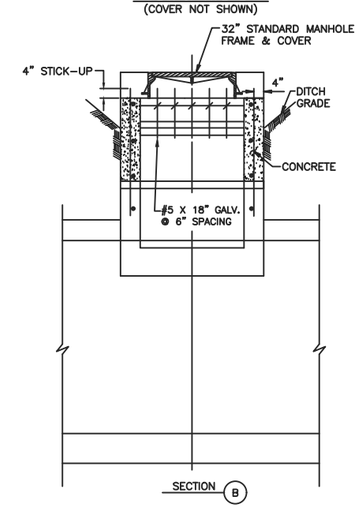

NOTES:

1. ONLY CAST-IN-PLACE OR PRE-CAST MANHOLES SHALL BE USED.
2. NO BRICKS OF ANY KIND WILL BE ALLOWED IN CONSTRUCTION OF MANHOLES OR INLETS.
3. MANHOLES AND INLETS SHOULD BE PLACED AT THE LOT LINE.
4. ALL DETENTION AND PERIMETER DRAINAGE SHALL BE COMPLETED BEFORE ANY INTERIOR CONSTRUCTION IS STARTED.
5. THE MINIMUM COMPRESSIVE STRENGTH OF CONCRETE SHALL BE MIN. 4000 PSI AT 28 DAYS.
6. FOR CAST IN PLACE STORM INLETS: FOUR FIELD TEST CYLINDERS SHALL BE TAKEN FROM EACH MIX DESIGN PLACED EACH DAY ACCORDING ASTM C172-04 STANDARD PRACTICE FOR SAMPLING FRESHLY MIXED CONCRETE.
7. THE CONTRACTOR SHALL INSTALL COP STORM DRAIN LABEL ON ALL C INLETS. THE CONTRACTOR SHALL REQUEST AND OBTAIN LABEL FROM PUBLIC WORKS. SASHCO SEALANTS CLEAR/WHITE LEXEL ADHESIVE CAULK OR APPROVED EQUAL SHALL BE USED AS ADHESIVE FOR INSTALLATION.

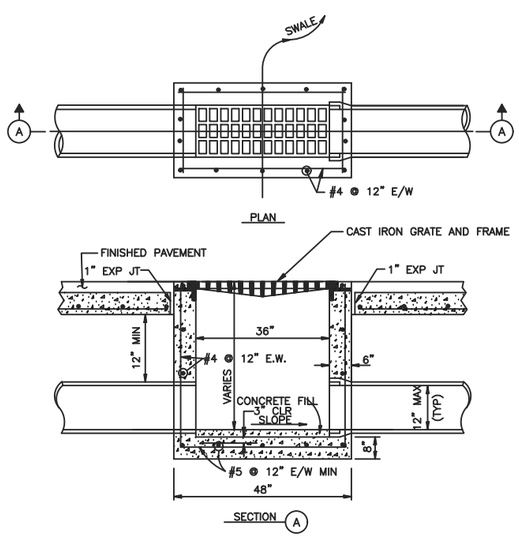

2 "D" INLET

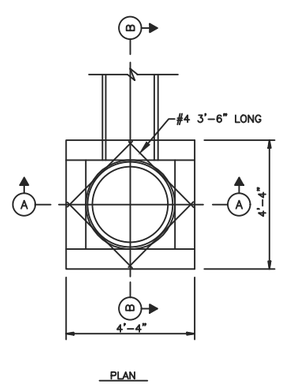

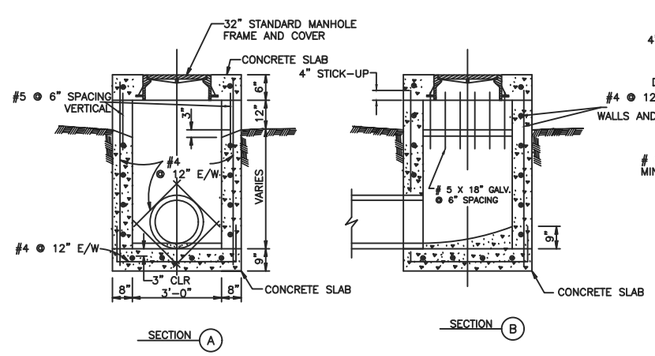

3 "E" INLET

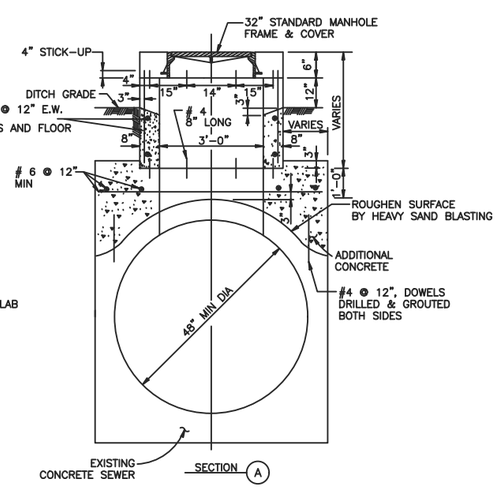

4 "E" INLET

NO.	REVISIONS	DATE	NAME

CITY OF LA MARQUE, TEXAS
STANDARD DETAILS

FOR INTERIM REVIEW ONLY

DOCUMENT INCOMPLETE: NOT INTENDED FOR CONSTRUCTION, BIDDING, OR PERMIT PURPOSES

ENGINEER: xxxx
P.E. SERIAL No. xxxx
DATE: xxx

PROJECT TITLE:

DRAWN BY: D.P.D.
CK'D BY: D.V.H.
SCALE: N.T.S.
DATE:
SHEET DESCRIPTION: STORM SEWER DETAILS – 2
APPROVED BY:
SHEET NO: /

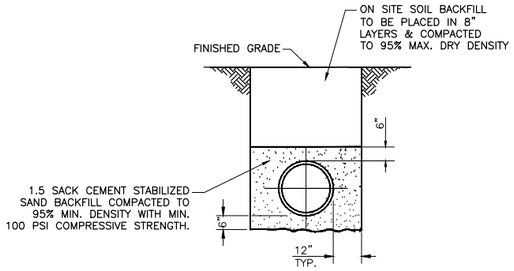

1 **AA PIPE BEDDING DETAIL**
HDPE OR PVC STORM SEWER

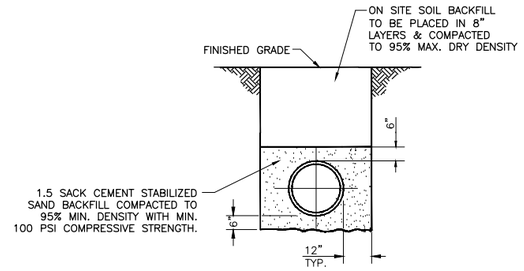

2 **PIPE BEDDING DETAIL**
CONCRETE PIPE (TONGUE AND GROOVE)

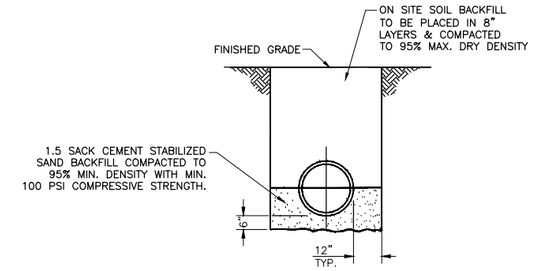

3 **PIPE BEDDING DETAIL**
BELL AND SPIGOT CONCRETE PIPE (RUBBER GASKET)

NOTES:

1. POURED-IN-PLACE OR PRE-CAST MANHOLES ONLY SHALL BE USED.
2. NO BRICKS OF ANY KIND WILL BE ALLOWED IN CONSTRUCTION OF MANHOLES OR INLETS.
3. ALL PVC PIPE SHALL HAVE RUBBER GASKET EQUIPPED BELL AND SPIGOT JOINTS CONFORMING TO ASTM D3212. ELASTOMERIC SEALS SHALL BE A SINGLE DOUBLE-SEALING GASKET SPANNING ONE FULL CORRUGATION WITH THE LEADING EDGE BEING LOWER THAN THE SECOND EDGE TO FACILITATE PROPER JOINING. THE GASKET MATERIAL SHALL CONFORM TO ASTM F477.
4. FOR ALL PRE-CAST AND POURED-IN-PLACE INLETS AND JUNCTION BOXES, CENTER DOUBLE-SEALING GASKET IN WALL AND GROUT COMPLETELY AROUND PVC PIPE. GROUT SHALL BE SMOOTH AND FLUSH WITH INNER AND OUTER WALL WHEN ENTERING AT AN ANGLE TO THE WALL OR THROUGH THE CORNER OF AN INLET OR JUNCTION BOX, THE GASKET MAY BE OMITTED.
5. ALL CEMENT STABILIZED SAND BACKFILL SHALL HAVE A MINIMUM COMPRESSIVE STRENGTH OF 100 PSI.

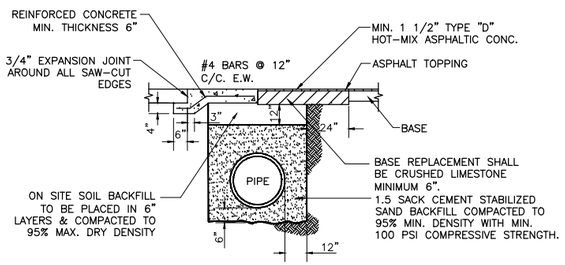

4 **TRENCH SECTION IN PAVED AREA**
HDPE OR PVC STORM SEWER

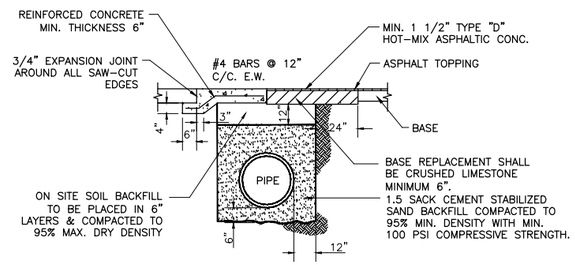

5 **PIPE BEDDING DETAIL**
CONCRETE PIPE (TONGUE AND GROOVE)
BELL AND SPIGOT CONCRETE PIEPE (RUBBER GASKET)

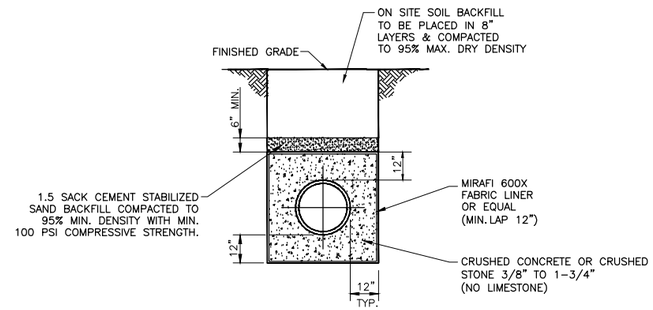

6 **BEDDING AND BACKFILL FOR WET SAND**

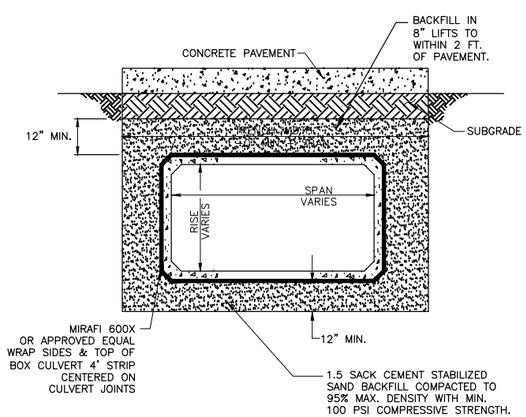

7 **BEDDING AND BACKFILL**
FOR REINFORCED CONCRETE BOX CULVERTS
UNDER PAVEMENT

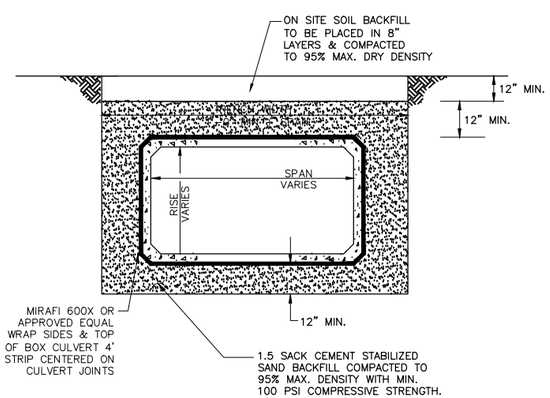

8 **BEDDING AND BACKFILL**
FOR REINFORCED CONCRETE BOX CULVERTS

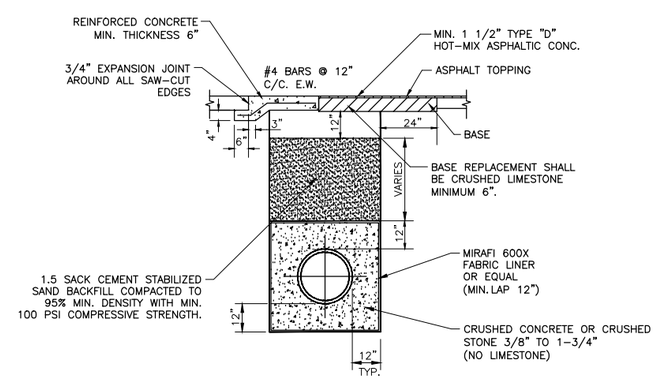

9 **BEDDING AND BACKFILL FOR WET SAND**
UNDER PAVEMENT

NOTES:

1. NECESSITY FOR USE OF THIS SECTION TO BE DETERMINED BY THE ENGINEER AS CONSTRUCTION PROGRESSES AND MAY BE MODIFIED BY HIM TO SUIT CONDITIONS ENCOUNTERED.
2. WELL POINTS TO BE INSTALLED AND TRENCH KEPT DRY DURING CONSTRUCTION UNTIL BACKFILL IS COMPLETELY PLACED AND ENOUGH TIME AS APPROVED BY ENGINEER HAS ELAPSED.

NO.	REVISIONS	DATE	NAME
△			
△			
△			
△			
△			

CITY OF LA MARQUE, TEXAS
STANDARD DETAILS

FOR INTERIM REVIEW ONLY

DOCUMENT INCOMPLETE:
NOT INTENDED FOR CONSTRUCTION, BIDDING, OR PERMIT PURPOSES

ENGINEER: xxxx
P.E. SERIAL No. xxxx
DATE: xxx

PROJECT TITLE:

DRAWN BY: D.P.D.
CK'D BY: D.V.H.
SCALE: N.T.S.
DATE:
SHEET DESCRIPTION: STORM SEWER DETAILS – 3
APPROVED BY:
SHEET NO: /

DIMENSIONS AND WEIGHTS			
I.D. SIZE (in)	W (in)	B (in)	RISER WT/LF (lb)
48	5	6	868
60	6	8	1300
72	7	8	1811
96	9	8	3090

NOTE:

1. CLASS 1 CONCRETE WITH A DESIGN STRENGTH OF4000 PSI AT 28 DAYS. RATES FOR H-20 LOADING.
2. PRECAST CONCRETE MANHOLE CONFORMING TO ASTM C478. STRUCTURAL REINFORCEMENT CONFORMING TO ASTM 615A.
3. LIFTING INSERTS AS REQUIRED.
4. ALL JOINTS SHALL BE SEALED WITH APPROVED GASKET.
5. LARGER INSIDE DIAMETER MANHOLES SHALL BE REQUIRED IF LESS THAN 1' OF WALL SURFACE IS LEFT BETWEEN OPENINGS OR AS SPECIFIED BY ENGINEER.
6. ALL MANHOLES IN OPEN DITCH AND ABOVE FINISHED GRADE SHALL HAVE HINGED FRAME AND COVER.
7. ALL MANHOLES IN PAVED AREAS SHALL HAVE BLOCK OUT (SEE DRIVEWAY DETAIL SHEET).

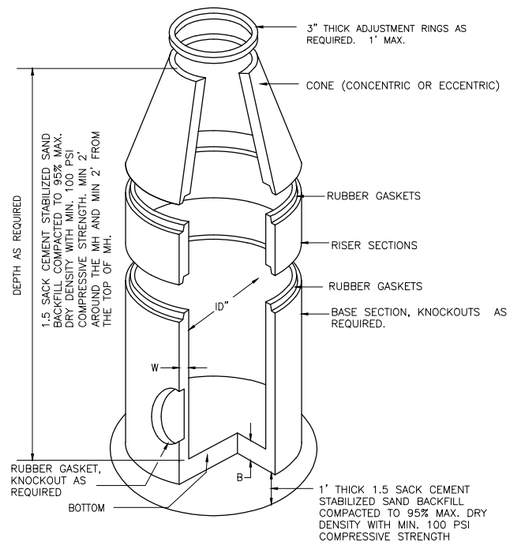

1 TYPE "C" PRECAST STORM SEWER MANHOLE

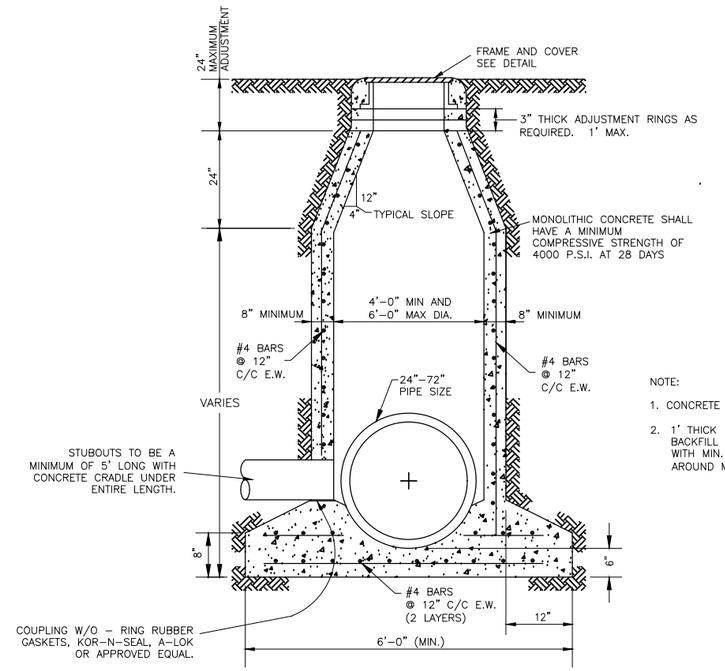

NOTE:

1. CONCRETE SHALL BE A MONOLITHIC POUR.
2. 1' THICK 1.5 SACK CEMENT STABILIZED SAND BACKFILL COMPACTED TO 95% MAX. DRY DENSITY WITH MIN. 100 PSI COMPRESSIVE STRENGTH AROUND MANHOLE COMPACTED IN 8" LIFTS.

NOTE:

1. ONLY CAST-IN-PLACE OR PRE-CAST MANHOLES SHALL BE USED.
2. NO BRICKS OF ANY KIND WILL BE ALLOWED IN CONSTRUCTION OF MANHOLES OR INLETS.
3. FOR ALL PRE-CAST AND POURED-IN-PLACE INLETS AND JUNCTION BOXES, CENTER DOUBLE- SEALING GASKET IN WALL AND GROUT COMPLETELY AROUND DUAL WALLPVC PIPE. GROUT SHALL BE SMOOTH AND FLUSH WITH INNER AND OUTER WALL WHEN ENTERING AT AN ANGLE TO THE WALL OR THROUGH THE CORNER OF AN INLET OR JUNCTION BOX, THE GASKET MAY BE OMITTED.
4. ALL CEMENT STABILIZED SAND BACKFILL SHALL BE 1.5 SACK CEMENT WITH MINIMUM 100PSI COMPRESSIVE STRENGTH.

2 TYPE "C" CAST-IN-PLACE STORM SEWER MANHOLE

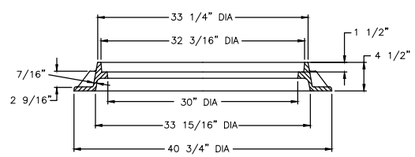

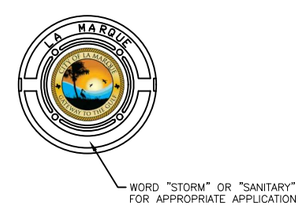

NOTE:

1. MANHOLE FRAME AND COVER TO BE EAST JORDAN IRON WORKS PATTERN, OR OTHER APPROVED EQUAL. WHERE SEWER IS LOCATED IN EASEMENTS, CONTRACTOR MAY USE LIGHTWEIGHT F AND C, APPROVED BY THE ENGINEER.
2. STAINLESS STEEL INFLOW PREVENTERS MADE BY KoLa, INC., OR APPROVED EQUAL, SHALL BE USED ON ALL SANITARY SEWER MANHOLES.
3. ALL MANHOLES IN OPEN DITCH AND ABOVE FINISHED GRADE SHALL HAVE HINGED FRAME AND COVER.

3 MANHOLE COVER AND FRAME

NO.	REVISIONS	DATE	NAME

CITY OF LA MARQUE, TEXAS STANDARD DETAILS

180

FOR INTERIM REVIEW ONLY

DOCUMENT INCOMPLETE: NOT INTENDED FOR CONSTRUCTION, BIDDING, OR PERMIT PURPOSES

ENGINEER: xxxx
P.E. SERIAL No. xxxx
DATE: xxx

PROJECT TITLE:

DRAWN BY: D.P.D.
CK'D BY: D.V.H.
SHEET DESCRIPTION: STORM SEWER DETAILS - 4
SCALE: N.T.S.
DATE:
APPROVED BY:
SHEET NO: /

1. SET POSTS AT REQUIRED SPACING AND DEPTH. EXCAVATE A 6" x 6" TRENCH UPSLOPE ALONG THE LINE OF POSTS.
2. ATTACH FILTER FABRIC TO POSTS AND INSTALL IT INTO THE TRENCH. BACKFILL THE TRENCH AND COMPACT THE EXCAVATED SOIL.

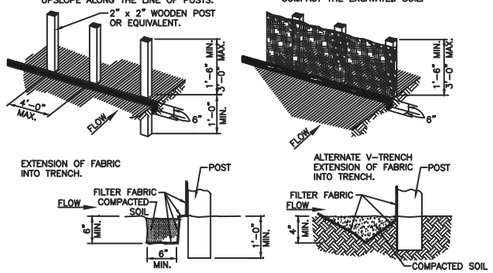

GENERAL NOTES:

1. SET POSTS AT 4-FEET MAXIMUM SPACING. IF FACTORY PREASSEMBLED FENCE WITH SUPPORT NETTING IS USED, SPACING OF POST MAY BE INCREASED TO 8 FEET MAXIMUM.
2. WHEN TWO SECTIONS OF FILTER FABRIC ADJOIN EACH OTHER, OVERLAP 6 INCHES AT THE POST, FOLD TOGETHER, AND ATTACH TO THE POSTS.
3. REMOVE SEDIMENT DEPOSITS WHEN SILT DEPTH REACHES ONE-THIRD OF THE HEIGHT OF THE FENCE.

FILTER FABRIC FENCE

SYMBOL

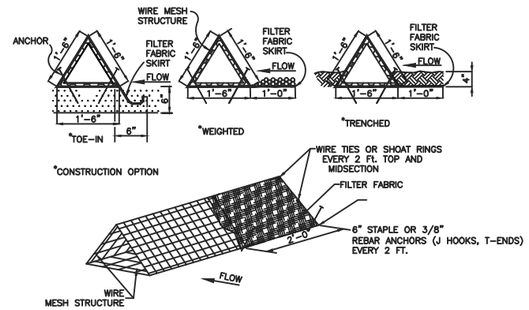

GENERAL NOTES:

1. PLACE BARRIER IN A ROW WITH ENDS TIGHTLY ABUTTING THE ADJACENT BARRIER.
2. USING ONE CONTINUOUS SECTION OF FILTER FABRIC, WRAP FABRIC AROUND WIRE MESH AND EXTEND FABRIC TO FORM SKIRT ON THE UPSTREAM SIDE.
3. WEIGHT SKIRT WITH A CONTINUOUS LAYER OF 3-INCH TO 5-INCH OPEN GRADED ROCK, OR TOE IN SKIRT WITH SIX INCHES WITH MECHANICALLY COMPACTED MATERIAL.
4. SECURELY ANCHOR BARRIER AND SKIRT IN PLACE USING 6-INCH WIRE STAPLES ON 2-FOOT CENTERS ON BOTH EDGES, OR STAKE USING 18-INCH BY 3/8 INCH REBARS (T-ENDS, J-HOOKS).
5. FILTER FABRIC SHALL BE LAPPED OVER ENDS 6 INCHES TO COVER SEGMENT JOINTS. FASTEN JOINTS WITH GALVANIZED SHOAT RINGS OR EQUIVALENT.
6. THE BARRIER STRUCTURE SHALL BE WELDED WIRE MESH, 18 INCHES ON EACH SIDE.

TRIANGLE FILTER FABRIC FENCE

SYMBOL

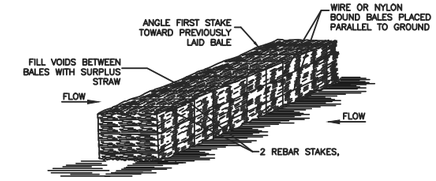

STRAW BALE FENCE

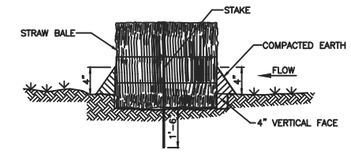

SECTION

GENERAL NOTES:

1. LIMIT USE TO ONSITE SWALES FOR PURPOSES OF LOW FLOW VELOCITY DISSIPATION FOR EROSION CONTROL. USE STRAW BALE FENCES TO TREAT OVERLAND FLOW ONLY. DO NOT USE STRAW BALE FENCES TO TREAT FLOW IN CHANNELS.
2. PLACE BALES IN A ROW WITH ENDS TIGHTLY ABUTTING ADJACENT BALES. FILL THE VOIDS BETWEEN BALES WITH SURPLUS STRAW. PLACE BALES WITH BINDING PARALLEL TO GROUND SURFACE.
3. IMBED EACH BALE AT LEAST 4 INCHES IN THE SOIL.
4. SECURELY ANCHOR BALES IN PLACE BY REBAR STAKES. DRIVE STAKES THROUGH THE BALES AND AT LEAST 18 INCHES INTO THE GROUND. ANGLE THE STAKE IN EACH BALE TOWARD THE PREVIOUS BALE TO FORCE THE BALES TOGETHER.
5. BIND BALES WITH WIRE OR NYLON ROPE TIED ACROSS THE STRAW BALES.
6. REPLACE WITH NEW STRAW BALE FENCE EVERY TWO MONTHS.
7. WATTLES STAKED INTO THE GROUND ARE A PREFERRED SUBSTITUTE FOR STRAW BALE FENCES.

STRAW BALE FENCE

SYMBOL

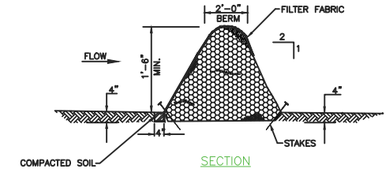

SECTION

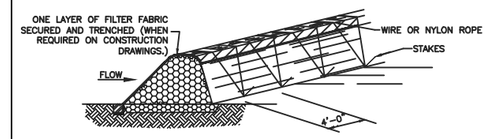

GENERAL NOTES:

1. LIMIT USE TO ONSITE SWALES FOR PURPOSES OF LOW FLOW VELOCITY DISSIPATION FOR EROSION CONTROL. USE BRUSH BERMS TO TREAT OVERLAND FLOW ONLY. DO NOT USE BRUSH BERMS TO TREAT FLOW IN CHANNELS.
2. PLACE WOODY BRUSH AND BRANCHES HAVING A DIAMETER OF LESS THAN 2 INCHES WITH A 6-INCH OVERLAP. AVOID INCORPORATION OF ANNUAL WEEDS AND SOIL INTO BRUSH BERM.
3. MINIMUM HEIGHT OF THE BRUSH BERM IS 18 INCHES, MEASURED FROM THE TOP OF THE EXISTING GROUND AT THE UPSLOPE TOE TO THE TOP OF THE BERM.
4. HAND PLACE BRUSH BERMS ALONG CONTOUR LINES. MACHINE PLACEMENT OF BRUSH BERMS IS NOT PERMITTED.
5. IMBED BRUSH BERM AT LEAST 4 INCHES INTO THE SOIL.
6. ANCHOR BRUSH BERMS USING WIRE OR NYLON ROPE ACROSS THE BERM WITH A MINIMUM TENSION OF 50 POUNDS.
7. SECURELY TIE ROPE TO 18-INCH REBAR STAKES DRIVEN INTO THE GROUND ON 4-FOOT CENTERS ON BOTH SIDES OF THE BERM.
8. PERFORM MAINTENANCE AS NEEDED.

BRUSH BERM

SYMBOL

1. SET POSTS AT REQUIRED SPACING AND DEPTH. EXCAVATE A 6" x 6" TRENCH UPSLOPE ALONG THE LINE OF POSTS.
2. SECURE MESH FENCING TO POSTS

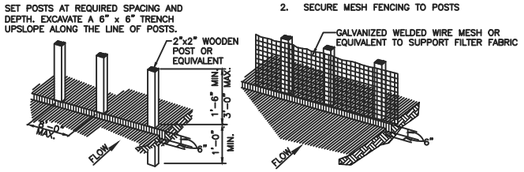

3. ATTACH FILTER MATERIAL TO WIRE FENCE AND EXTEND IT INTO THE TRENCH. BACKFILL AND COMPACT THE EXCAVATED SOIL.

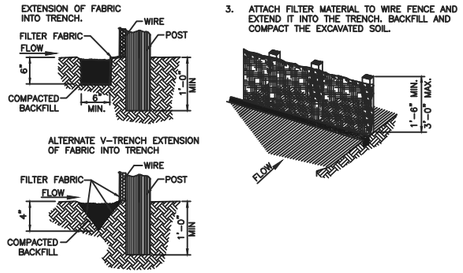

GENERAL NOTES:

1. SECURELY FASTEN MESH FENCING TO POSTS WITH STAPLES OR TIE WIRES.
2. SECURELY FASTEN FILTER FABRIC TO MESH FENCING.
3. WHEN TWO SECTIONS OF FILTER FABRIC ADJOIN EACH OTHER, OVERLAP 6 INCHES AT A POST, FOLD TOGETHER, AND ATTACH TO A POST.
4. REMOVE SEDIMENT DEPOSITS WHEN SILT REACHES ONE-THIRD OF THE HEIGHT OF THE FENCE IN DEPTH.

REINFORCED FILTER FABRIC BARRIER

SYMBOL

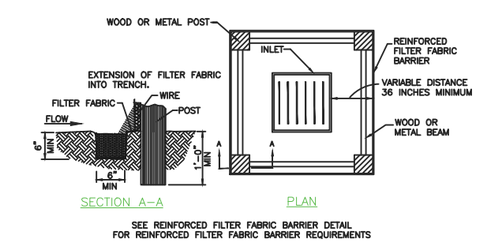

SEE REINFORCED FILTER FABRIC BARRIER DETAIL FOR REINFORCED FILTER FABRIC BARRIER REQUIREMENTS

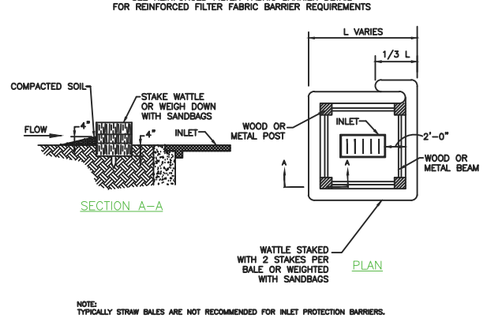

NOTE:
TYPICALLY STRAW BALES ARE NOT RECOMMENDED FOR INLET PROTECTION BARRIERS.

INLET PROTECTION BARRIERS FOR STAGE I INLETS

IPB

SYMBOL

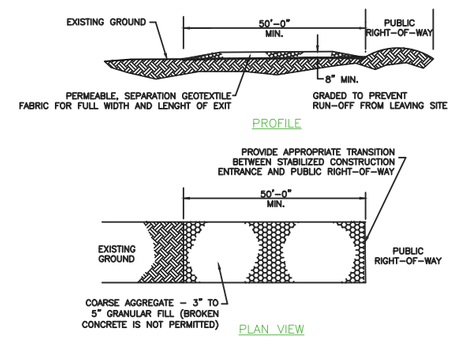

GENERAL NOTES:

1. MINIMUM LENGTH IS AS SHOWN ON CONSTRUCTION DRAWINGS OR 50 FEET, WHICHEVER IS MORE.
2. CONSTRUCT AND MAINTAIN CONSTRUCTION EXIT WITH CONSTANT WIDTH ACROSS ITS LENGTH, INCLUDING ALL POINTS OF INGRESS OR EGRESS.
3. UNLESS SHOWN ON THE CONSTRUCTION DRAWINGS, STABILIZATION FOR OTHER AREAS WILL HAVE THE SAME AGGREGATE THICKNESS AND WIDTH REQUIREMENTS AS THE STABILIZED CONSTRUCTION EXIT.
4. WHEN SHOWN ON THE CONSTRUCTION DRAWINGS, WIDEN OR LENGTHEN STABILIZED AREA TO ACCOMMODATE A TRUCK WASHING AREA. PROVIDE OUTLET SEDIMENT TRAP FOR THE TRUCK WASHING AREA.
5. PROVIDE PERIODIC TOP DRESSING WITH ADDITIONAL COARSE AGGREGATE TO MAINTAIN THE REQUIRED DEPTH OR WHEN SURFACE BECOMES PACKED WITH MUD.
6. PERIODICALLY TURN AGGREGATE TO EXPOSE A CLEAN DRIVING SURFACE.
7. ALTERNATIVE METHODS OF CONSTRUCTION INCLUDE
   - CEMENT STABILIZED SOIL: COMPACTED CEMENT STABILIZED SOIL, LIMESTONE AGGREGATE, OR OTHER FILL MATERIAL IN AN APPLICATION OF THICKNESS OF 8 INCHES.
   - WOOD MATS: OAK OR OTHER HARDWOOD TIMBERS PLACED EDGE TO EDGE AND ACROSS SUPPORT WOODEN BEAMS WHICH ARE PLACED ON TOP OF EXISTING SOIL IN AN APPLICATION THICKNESS OF 6 INCHES.
   - STEEL MATS: PERFORATED MATS PLACED ACROSS PERPENDICULAR SUPPORT MEMBERS.

STABILIZED CONSTRUCTION ACCESS

SYMBOL

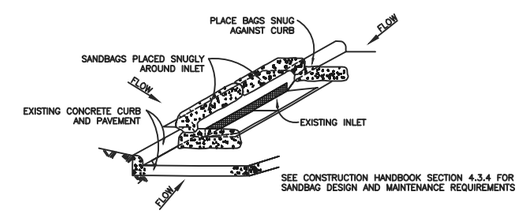

GENERAL NOTES:

1. BAGS OR WATTLES CAN BE USED FOR THIS APPLICATION.
2. PROVIDE WOVEN OR UNWOVEN GEOTEXTILE FILTER FABRIC FOR BAGS.
3. PROVIDE COARSE SAND AND AGGREGATE MIX FOR FILL MATERIAL FOR BAGS. USE ONLY PARTICLES CONSISTING OF CLEAN, HARD, DURABLE MATERIALS FREE FROM ADHERENT COATINGS, SALT, ALKALI, DIRT, CLAY, LOAM, SHALE, SOFT OR FLAKY MATERIALS, OR ORGANIC AND INJURIOUS MATTER.
4. REMOVE SEDIMENT DEPOSIT WHEN THE SEDIMENT HAS ACCUMULATED TO ONE-THIRD THE HEIGHT OF THE BARRIER.

INLET PROTECTION BARRIERS FOR STAGE II INLETS

IPB

SYMBOL

NO.	REVISIONS	DATE	NAME

CITY OF LA MARQUE, TEXAS
STANDARD DETAILS

FOR INTERIM REVIEW ONLY

DOCUMENT INCOMPLETE:
NOT INTENDED FOR CONSTRUCTION, BIDDING, OR PERMIT PURPOSES

ENGINEER: XXXX
P.E. SERIAL No. XXXX
DATE: XXX

PROJECT TITLE:		
DRAWN BY: D.P.D.		
CK'D BY: D.V.H.	SHEET DESCRIPTION: STORM WATER POLLUTION PREVENTION PLAN	
SCALE: N.T.S.		SHEET NO:
DATE:	APPROVED BY:	/

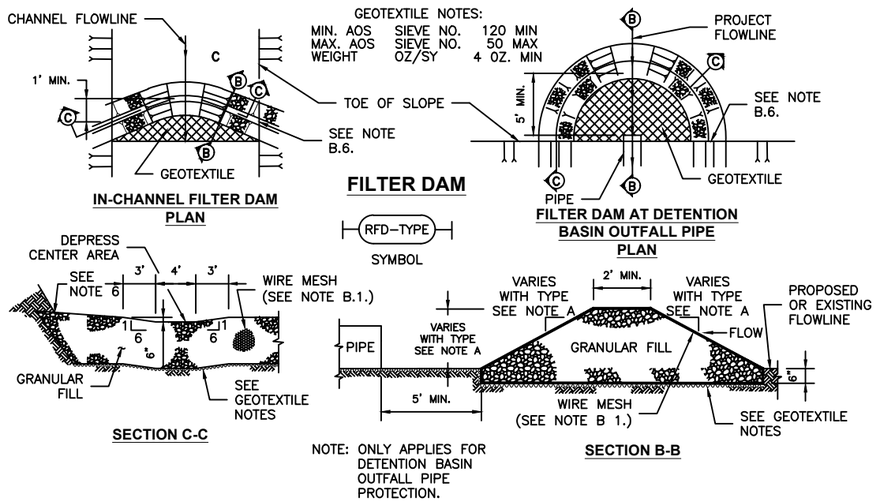

A. TYPES OF FILTER DAMS

1. TYPE 1 (NON-REINFORCED)
   a. HEIGHT – 18-24 INCHES. MEASURE VERTICALLY FROM EXISTING GROUND TO TOP OF FILTER DAM.
   b. TOP WIDTH – 2 FEET (MINIMUM)
   c. SLOPES – 2:1 (MAXIMUM).
2. TYPE 2 (REINFORCED).
   a. HEIGHT – 18-36 INCHES. MEASURE VERTICALLY FROM EXISTING GROUND TO TOP OF FILTER DAM.
   b. TOP WIDTH – 2 FEET (MINIMUM).
   c. SLOPES – 2:1 (MAXIMUM).
3. TYPE 3 (REINFORCED)
   a. HEIGHT – 36-48 INCHES. MEASURE VERTICALLY FROM EXISTING GROUND TO TOP OF FILTER DAM.
   b. TOP WIDTH – 2 FEET (MINIMUM).
   c. SLOPES – 3:1 (MAXIMUM).
4. TYPE 4 (GABION)
   a. HEIGHT – 30 INCHES (MINIMUM). MEASURE VERTICALLY FROM EXISTING GROUND TO TOP OF FILTER DAM.
   b. TOP WIDTH – 2 FEET (MINIMUM).
5. TYPE 5. AS SHOWN ON THE PLANS.

B. CONSTRUCT FILTER DAMS ACCORDING TO THE FOLLOWING CRITERIA UNLESS SHOWN OTHERWISE ON THE PLANS.

1. TYPE 2 AND 3 FILTER DAMS: SECURE WITH 20 GAUGE GALVANIZED WOVEN WIRE MESH WITH 1 INCH DIAMETER HEXAGONAL OPENINGS.
2. PLACE GRANULAR FILL ON THE WIRE MESH TO HEIGHT AND SLOPES SHOWN ON PLANS OR AS SPECIFIED BY THE ENGINEER.
   a. 3-5 INCHES FOR ROCK FILTER DAM TYPES 1, 2 AND 4.
   b. 4-8 INCHES FOR ROCK FILTER DAM TYPE REFER TO GRANULAR FILL IN SPECIFICATION SECTION No. 02378 RIPRAP AND GRANULAR FILL.
3. FOLD WIRE MESH AT UPSTREAM SIDE OVER GRANULAR FILL AND TIGHTLY SECURED TO ITSELF ON THE DOWNSTREAM SIDE USING WIRE TIES OR HOG RINGS.
4. IN STREAMS: SECURE OR STAKE MESH TO STREAM BED PRIOR TO AGGREGATE PLACEMENT.
5. SEE HCFCD SPECIFICATION SECTION NO. 02364-FILTER DAMS.
6. EMBED ONE FOOT MINIMUM INTO SLOPE AND RAISE ONE FOOT HIGHER THAN CENTER OF DEPRESSED AREA AT SLOPE.

MAINTENANCE

ALL EROSION AND SEDIMENT CONTROL WILL BE MAINTAINED IN GOOD WORKING ORDER. IF A REPAIRS NECESSARY IT WILL BE DONE AT THE EARLIEST DATE POSSIBLE, BUT NO LATER THAN 7 CALENDAR DAYS AFTER THE SURROUNDING EXPOSED GROUND HAS DRIED SUFFICIENTLY TO PREVENT FURTHER DAMAGE FROM HEAVY EQUIPMENT. THE AREA ADJACENT TO CREEKS AND DRAINAGE WAYS SHALL HAVE PRIORITY FOLLOWED BY DEVICES PROTECTING STORM SEWER INLETS.

INSPECTION

ALL INSPECTION WILL BE PERFORMED BY A CERTIFIED INSPECTOR EVERY SEVEN DAYS OR TWO WEEKS, AS WELL AS AFTER EVERY HALF-INCH OR MORE OF RAIN (AS RECOMMENDED ON A NON-FREEZING RAIN GAUGE TO BE LOCATED AT THE PROJECT SITE). AN INSPECTION AND MAINTENANCE REPORT SHOULD BE MADE FOR EACH INSPECTION. BASED ON THE INSPECTION RESULTS, THE CONTROLS SHALL BE REVISED ACCORDING TO THE INSPECTION REPORT.

WASTE MATERIALS

THE DUMPSTER USED TO STORE ALL WASTE MATERIAL WILL MEET ALL STATE AND THE CITY OF LA MARQUE SOLID WASTE ORDINANCE. ALL TRASH AND CONSTRUCTION DEBRIS WILL BE DEPOSITED IN THE DUMPSTER. THE DUMPSTER WILL BE EMPTIED AS NECESSARY OR AS REQUIRED BY LOCAL REGULATION AND THE TRASH WILL BE HAULED TO A LOCAL DUMP. NO CONSTRUCTION WASTE MATERIAL WILL BE BURIED ON SITE.

HAZARDOUS WASTE (INCLUDING SPILL REPORTING)

IN THE EVENT OF A SPILL WHICH MAY BE CONSIDERED HAZARDOUS, THE CITY OF LA MARQUE FIRE DEPARTMENT SHALL BE CONTACTED IMMEDIATELY AT 409-938-9260.

SANITARY WASTE

CONTRACTOR SHALL PROVE SANITARY WASTE FACILITIES IN ACCORDANCE WITH LOCAL, STATE AND FEDERAL REQUIREMENTS AND SPACING. ALL SANITARY WASTE SHALL BE COLLECTED FROM THE PORTABLE UNITS BY A LICENSED SANITARY WASTE MANAGEMENT CONTRACTOR OR FIRM AS NEEDED OR AS REQUIRED BY LOCAL REGULATIONS.

ADDITIONAL

DISPOSAL AREAS, STOCKPILES, AND HAUL ROADS SHALL BE CONSTRUCTED IN A MANNER THAT WILL MINIMIZE AND CONTROL THE SEDIMENT THAT MAY ENTER RECEIVING WATERWAYS.

CONSTRUCTION STAGING AREAS AND VEHICLE MAINTENANCE AREAS SHALL BE CONSTRUCTED BY THE CONTRACTOR IN A MANNER WHICH MINIMIZES THE RUNOFF OF ALL POLLUTANTS.

ALL WATERWAYS SHALL BE CLEARED AS SOON AS PRACTICAL OF TEMPORARY EMBANKMENTS, TEMPORARY BRIDGES, MATTING, FALSEWORK, PILING, DEBRIS, AND OTHER OBSTRUCTIONS PLACED DURING CONSTRUCTION OPERATIONS THAT ARE NOT PART OF THE FINISHED OWRK.

NO.	REVISIONS	DATE	NAME

CITY OF LA MARQUE, TEXAS
STANDARD DETAILS

FOR INTERIM REVIEW ONLY

DOCUMENT INCOMPLETE:
NOT INTENDED FOR CONSTRUCTION, BIDDING, OR PERMIT PURPOSES

ENGINEER: xxxx
P.E. SERIAL No. xxxx
DATE: xxx

PROJECT TITLE:

DRAWN BY: D.P.D.
CK'D BY: D.V.H.
SCALE: N.T.S.
DATE:
SHEET DESCRIPTION:
APPROVED BY:
SHEET NO: /

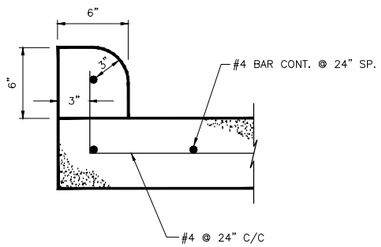

1 DETAIL - CONCRETE CURB
SCALE: 1"=0.5'

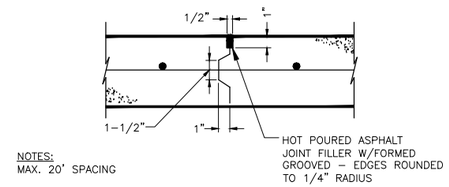

4 DETAIL - CONSTRUCTION JOINT
SCALE: 1"=0.5'

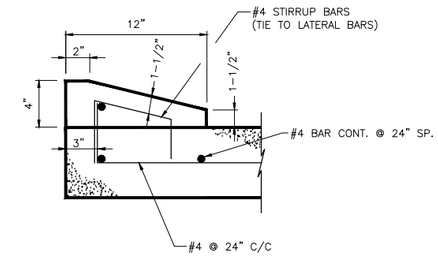

7 DOWEL-ON MOUNTABLE CURB
SCALE: 1"=0.5'

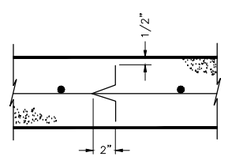

2 DETAIL - DEFORMED METAL STRIP CONTROL JOINT
(20' SPACING TYP.)
SCALE: 1"=0.5'

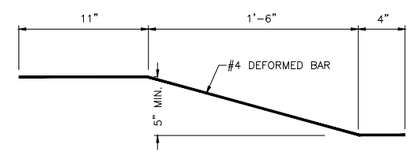

5 DETAIL - UNDERCUT BAR
SCALE: 1"=0.5'

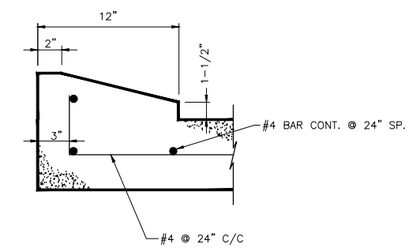

8 MONOLITHIC MOUNTABLE CURB
SCALE: 1"=0.5'

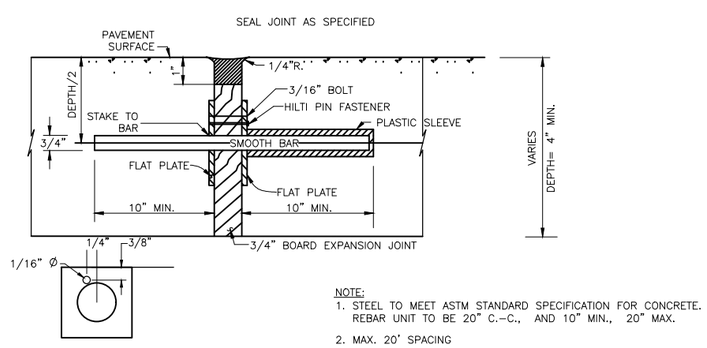

3 DETAIL - DOWEL TYPE EXPANSION JOINT
N.T.S

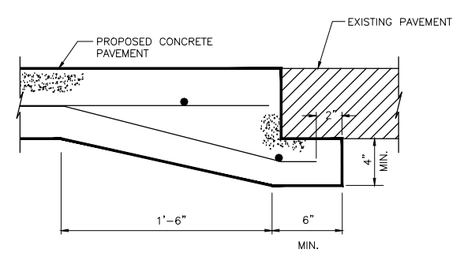

6 DETAIL - PAVING UNDERCUT
SCALE: 1"=0.5'

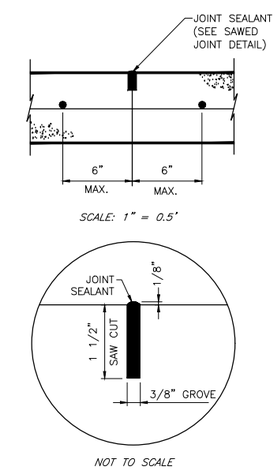

9 SAW CUT CONTROL JOINT
N.T.S

NO.	REVISIONS	DATE	NAME

CITY OF LA MARQUE, TEXAS
STANDARD DETAILS

FOR INTERIM REVIEW ONLY

DOCUMENT INCOMPLETE:
NOT INTENDED FOR CONSTRUCTION, BIDDING, OR PERMIT PURPOSES

ENGINEER: xxxx
P.E. SERIAL No. xxxx
DATE: xxx

PROJECT TITLE:
DRAWN BY: D.P.D.
CK'D BY: D.V.H.
SHEET DESCRIPTION: PAVING DETAILS – 1
SCALE: N.T.S.
DATE:
APPROVED BY:
SHEET NO: /

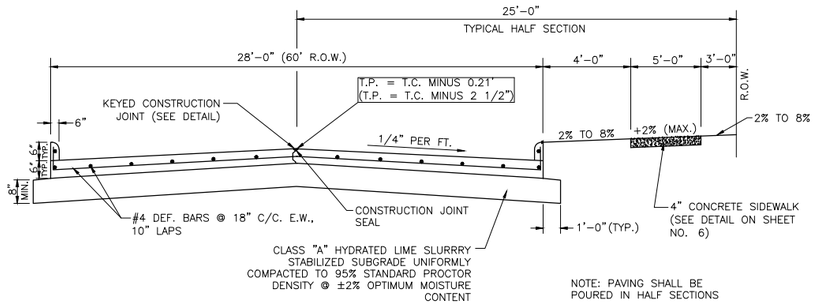

28'-0" WIDE CONCRETE PAVEMENT

RESIDENTIAL STREETS

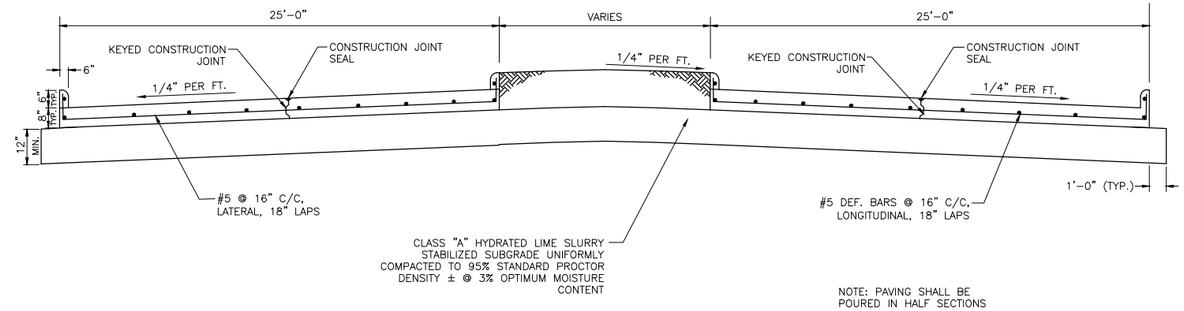

GENERAL NOTES:

1. PAVING EXPANSION/CONTRACTION JOINTS SHALL BE SPACED AT 59'-9" C/C.
2. CONCRETE USED FOR PAVEMENT SHALL BE A MINIMUM OF 5-1/2 SACK, 4000 PSI COMPRESSIVE STRENGTH AT 28 DAYS. 4 FIELD TEST CYLINDERS SHALL BE TAKEN FROM EVERY 100 CUBIC YARDS AND ANY PORTION LESS THAN 100 CUBIC YARDS FOR EACH MIX DESIGN PLACED EACH DAY. ACCORDING TO ASTM C172-04 STANDARD PRACTICE FOR SAMPLING FRESHLY MIXED CONCRETE.
3. CLASS "A" HYDRATED LIME SLURRY SHALL BE APPLIED FOR SOIL STABILIZATION.
4. REINFORCING STEEL SHALL COMPLY WITH OR EXCEED A.S.T.M. SPECIFICATIONS 615, GRADE 60, FOR NO. 4 BARS AND LARGER.

50'-0" WIDE CONCRETE PAVEMENT

MINOR AND MAJOR ARTERIAL - 120' R.O.W.

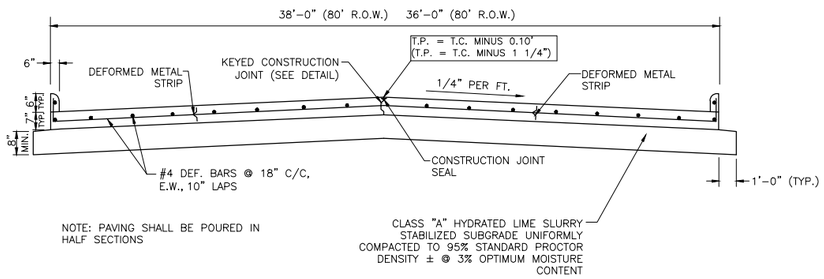

36' - 0" OR 38'-0" WIDE CONCRETE PAVEMENT

MINOR COLLECTOR STREETS - MIN. 80' R.O.W.

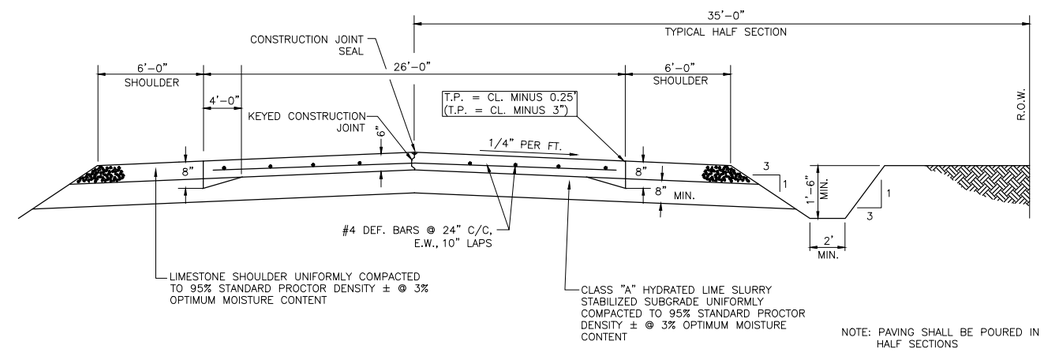

26'-0" WIDE CONCRETE PAVEMENT

RESIDENTIAL STREETS IN LARGE LOT SUBDIVISION MIN. 60' R.O.W. (LOTS 1 ACRE OR MORE)

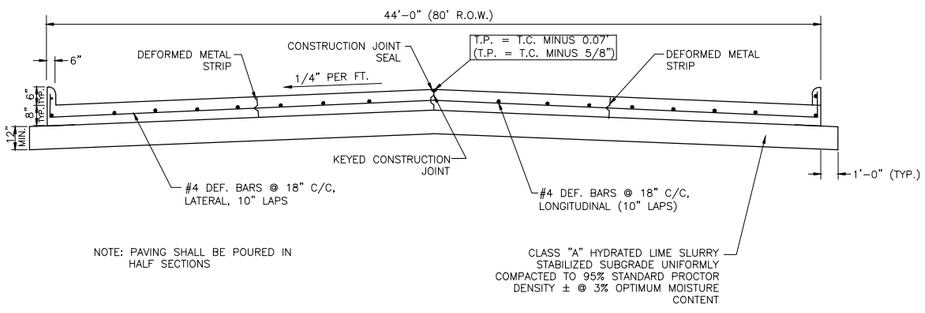

44'-0" WIDE CONCRETE PAVEMENT

COLLECTOR STREETS - MIN. 80' R.O.W.

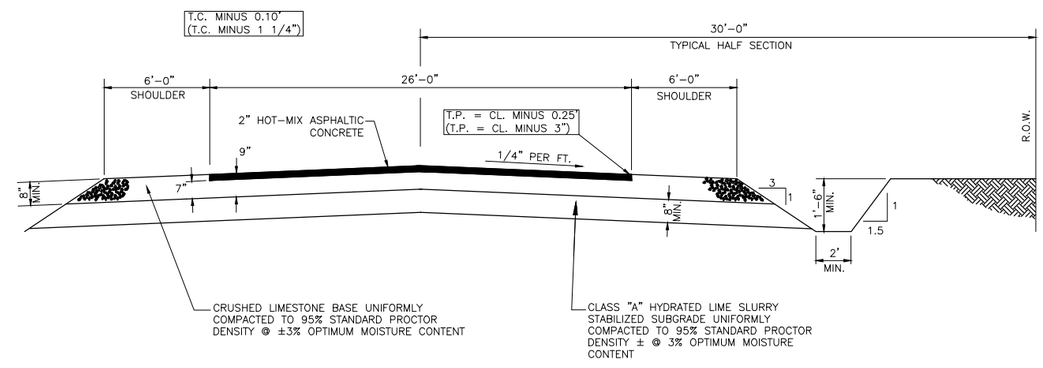

26'-0" WIDE ASPHALT PAVEMENT

RESIDENTIAL STREETS IN LARGE LOT SUBDIVISION MIN. 60'-0" R.O.W. (LOTS 1 ACRE OR MORE)

NO.	REVISIONS	DATE	NAME

CITY OF LA MARQUE, TEXAS
STANDARD DETAILS

FOR INTERIM REVIEW ONLY

DOCUMENT INCOMPLETE:
NOT INTENDED FOR CONSTRUCTION, BIDDING, OR PERMIT PURPOSES

ENGINEER: xxxx
P.E. SERIAL No. xxxx
DATE: xxx

PROJECT TITLE:

DRAWN BY: D.P.D.

CK'D BY: D.V.H.

SHEET DESCRIPTION: PAVING DETAILS – 2

SCALE: N.T.S.

DATE:

APPROVED BY:

SHEET NO: /

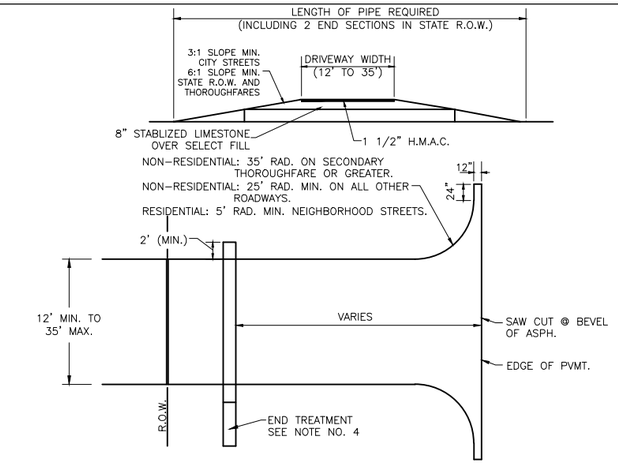

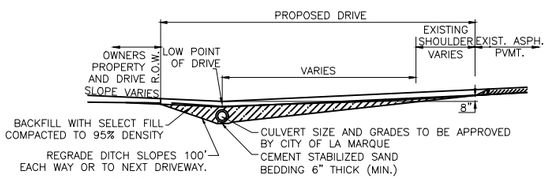

* NOTES:
1) DRIVEWAYS WITHIN R.O.W. MUST CONSIST OF 8" STABILIZED BASE WITH 2" ASPHALTIC CONCRETE PAVEMENT. (OPEN DITCH SECTION)
2) ALL DRIVEWAYS IN STATE R.O.W. REQUIRE TXDOT TRAFFIC CONTROL PLAN PRIOR TO BEGINNING CONSTRUCTION.
3) SAW CUT AT BEVEL OF ASPHALT (NO FURTHER THAN LANE EDGE STRIPE).
4) STABILIZED SAND TO BE DIAMETER PLUS 2' AND 2" ABOVE TOP BELL ON PIPE.
5) SAFETY END TREATMENTS ARE REQUIRED ON ALL CULVERTS IN TXDOT ROW.

1 ASPHALT DRIVEWAY TO ASPHALT

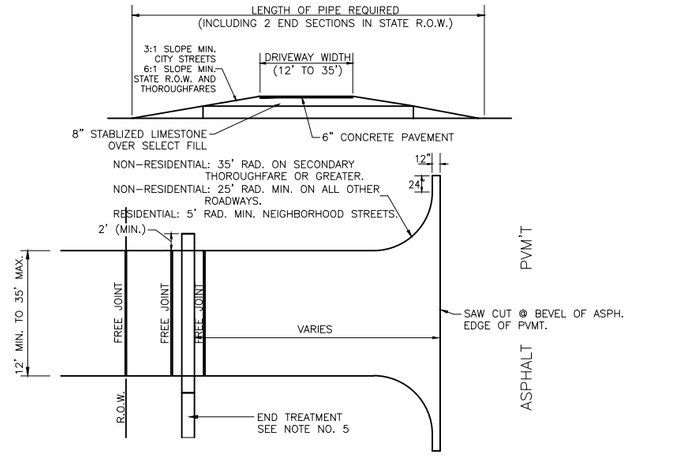

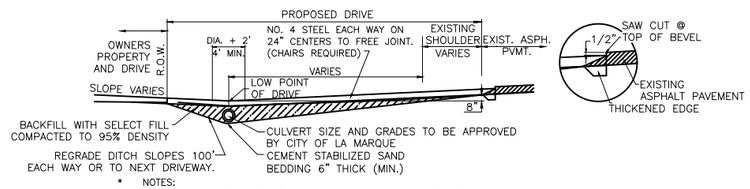

* NOTES:
1) DRIVEWAYS WITHIN R.O.W. MUST CONSIST OF 8" STABILIZED BASE WITH CONCRETE PAVEMENT. (OPEN DITCH SECTION)
2) ALL DRIVEWAYS IN STATE R.O.W. REQUIRE TXDOT TRAFFIC CONTROL PLAN PRIOR TO BEGINNING CONSTRUCTION.
3) SAW CUT AT BEVEL OF ASPHALT (NO FURTHER THAN LANE EDGE STRIPE).
4) STABILIZED SAND TO BE DIAMETER PLUS 2' AND 2" ABOVE TOP BELL ON PIPE.
5) SPECIAL END TREATMENTS ARE REQUIRED ON ALL CULVERTS IN THOROUGHFARES.

3 CONCRETE DRIVEWAY TO ASPHALT STREET

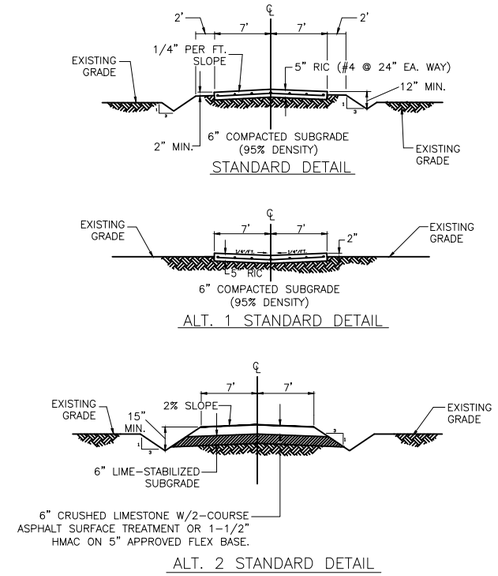

5 LIFT STATION ACCESS ROAD

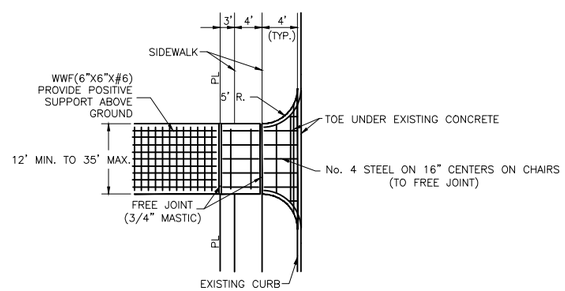

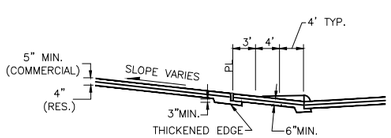

* NOTES:
1) CITY STREETS ONLY. NO CUTOUTS ARE PERMITTED ON TEXAS STATE HIGHWAYS.
2) ALL CUTOUTS MUST HAVE BARRICADES INSTALLED UNTIL DRIVEWAYS ARE POURED.
3) ALL DRIVEWAYS IN STATE R.O.W. REQUIRE TXDOT TRAFFIC CONTROL PLAN PRIOR TO BEGINNING CONSTRUCTION.

2 PORTLAND CEMENT DRIVEWAY TO CURB AND GUTTER STREET

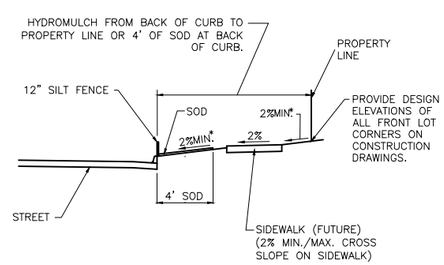

* CROSS SLOPE FROM BACK OF CURB TO EDGE OF SIDEWALK AND FROM EDGE OF SIDEWALK TO THE PROPERTY LINE, SHALL BE AT 2% MINIMUM. MAXIMUM CROSS SLOPE, UNLESS APPROVED OTHERWISE IN WRITING, FOR GRASSED SURFACES SHALL BE 12:1, OR 8 ½%

NOTE: 1. MAINTAIN SILT FENCE AND SOD FOR 2 YEARS MINIMUM OR UNTIL LOT SALE.
2. 90% COMPACTION MUST BE MAINTAINED FROM BACK OF CURB TO PROPERTY LINE.

4 PARK STRIP DETAIL

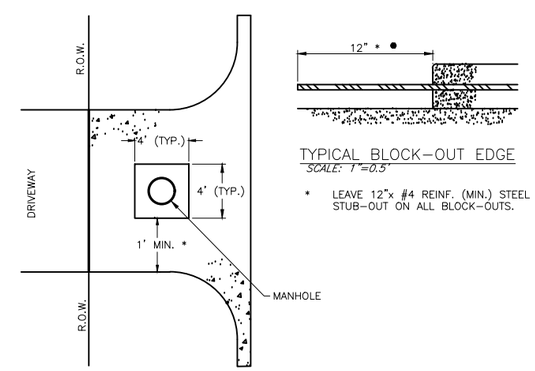

6 SIDEWALK BLOCK-OUT DETAIL

NO.	REVISIONS	DATE	NAME

CITY OF LA MARQUE, TEXAS
STANDARD DETAILS

FOR INTERIM REVIEW ONLY

DOCUMENT INCOMPLETE: NOT INTENDED FOR CONSTRUCTION, BIDDING, OR PERMIT PURPOSES

ENGINEER: xxxx
P.E. SERIAL No. xxxx
DATE: xxx

PROJECT TITLE:
DRAWN BY: D.P.D.
CK'D BY: D.V.H.
SHEET DESCRIPTION: PAVING DETAILS – 3
SCALE: N.T.S.
DATE:
APPROVED BY:
REVISE 8-10-12
SHEET NO: /

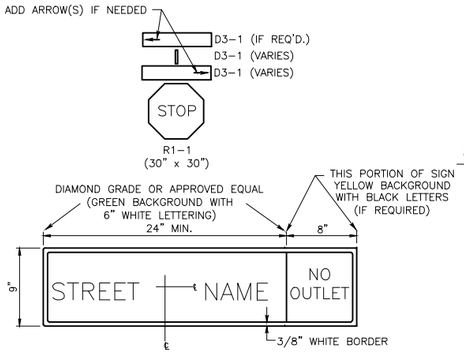

NOTES:
1. SIGNS ARE TO BE MADE OF ALUMINUM, .125" THICK, FLAT BLADE, DOUBLE FACED.

DETAIL OF STANDARD STREET NAME SIGN

N.T.S.

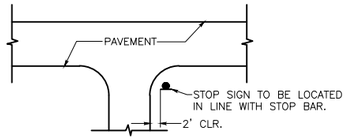

STOP SIGN LOCATION DETAIL

N.T.S.

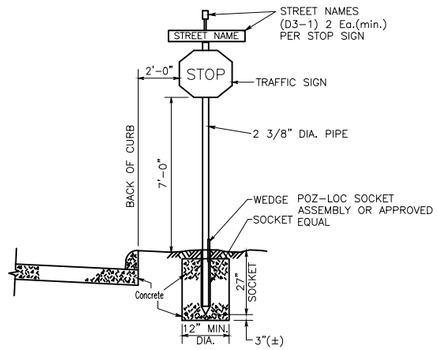

TYPICAL SIGN MOUNT DETAIL

N.T.S.

1 STREET SIGN DETAILS

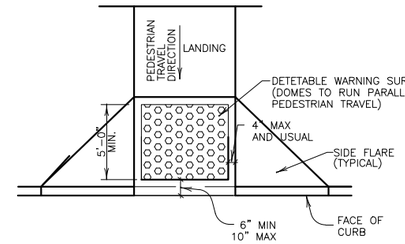

TYPICAL PLACEMENT OF DETECTABLE WARNING SURFACE ON SLOPING RAMP RUN.

1. CURB RAMPS MUST CONTAIN A DETECTABLE WARNING SURFACE THAT CONSISTS OF RAISED TRUNCATED DOMES COMPLYING WITH SECTION 4.29 OF THE TEXAS ACCESSIBILITY STANDARDS (TAS). THE SURFACE MUST CONTRAST VISUALLY WITH ADJOINING SURFACES, INCLUDING SIDE FLARES. FURNISH DARK RED DETECTABLE WARNING SURFACE ADJACENT TO UNCOLORED CONCRETE, INCLUDING SIDE FLARES.
2. DETECTABLE WARNING SURFACES MUST BE SLIP RESISTANT AND NOT ALLOW WATER TO ACCUMULATE.
3. ALIGN TRUNCATED DOMES IN THE DIRECTION OF PEDESTRIAN TRAVEL WHEN ENTERING THE STREET.
4. DETECTABLE WARNING SURFACES SHALL BE A MINIMUM OF 48" IN DEPTH IN THE DIRECTION OF PEDESTRIAN TRAVEL, AND EXTENT THE FULL WIDTH OF THE CURB RAMP (48" FOR 5' WIDE RAMP) OR LANDING WHERE THE PEDESTRIAN ACCESS ROUTE ENTERS THE STREET.
5. THE ACCEPTABLE LIST OF QUALIFIED DETECTABLE WARNING MATERIALS FOR THE CITY OF LA MARQUE INCLUDES ARMOR-TILE CAST IN PLACE TILE, CAST-IN-PLACE COMPOSITE TILES BY ADA SOLUTIONS, INC AND ANY OTHER PRODUCT THAT IS DEEMED TO BE EQUAL TO OR BETTER THAN THE ABOVE REFERENCED PRODUCTS BY THE CITY ENGINEER. (DETECTABLE WARNING PAVERS ARE NOT PERMITTED.)
6. DETECTABLE WARING SURFACES SHALL BE LOCATED SO THAT THE EDGE NEAREST THE CURB LINE IS A MINIMUM OF "6" AND A MAXIMUM OF "10" FROM THE EXTENSION OF THE SURFACE OF CURB.

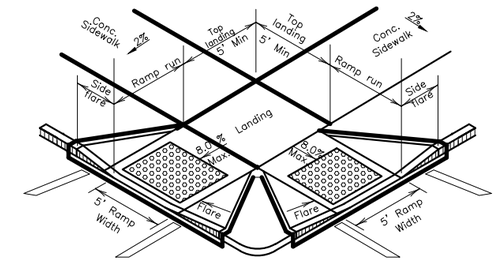

NOTES:
1. ALL SLOPES ARE MAXIMUM ALLOWABLE. THE LEAST POSSIBLE SLOPE THAT WILL STILL DRAIN PROPERLY SHOULD BE USED. ADJUST CURB RAMP LENGTH OR GRADE OF APPROACH SIDEWALKS AS DIRECTED.
2. LANDINGS SHALL BE 5'x5' MINIMUM WITH A MAXIMUM 2% SLOPE IN ANY DIRECTION.
3. ADDITIONAL INFORMATION ON CURB RAMP LOCATION, DESIGN, LIGHT REFLECTION VALUE AND TEXTURE MAY BE FOUND IN THE CURRENT EDITION OF THE TEXAS ACCESSIBILITY STANDARDS (TAS) AND 16 TAC 68.102§
4. SEPERATE CURB RAMP AND LANDINGS FROM ADJACENT SIDEWALK AND ANY OTHER ELEMENTS WITH AN EXPANSION JOINT UNLESS OTHERWISE DIRECTED BY THE ENGINEER.
5. PROVIDE A SMOOTH TRANSITION WHERE THE CURB RAMPS CONNECT TO THE STREET.

3 CURB RAMP

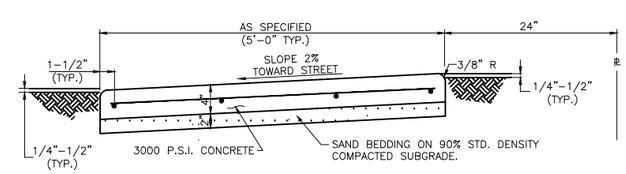

SECTION

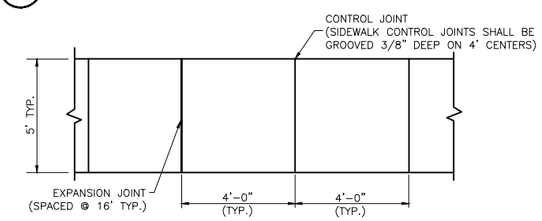

PLAN

NOTE:
1. ALL STREET LIGHTS ARE TO BE INSTALLED PRIOR TO ACCEPTANCE OF SUBDIVISION BY CITY COUNCIL.
2. ALL INTERIOR STREETS WITHIN THE SUBDIVISION MAY HAVE SIDEWALKS INSTALLED BY THE HOMEBUILDER. THE SIDEWALKS ON PERIMETER STREETS SHALL BE INSTALLED BY THE DEVELOPER. SIDEWALKS ON COLLECTOR AND THOROUGHFARE STREETS WILL BE A MINIMUM OF 6 FEET IN WIDTH.
3. ALL H.L.& P. UNDERGROUND CABLE WILL BE BURIED IN RIGID CONDUIT NOT LESS THAN ASTM-A-53 TYPE F GRADE A (DOMESTIC) PIPE, GALVANIZING ASTM-A-123. THIS CONDUIT IS TO BE USED WHEN PLACED UNDER ANY STREET OR DRIVE CROSSING, WATER/SEWER EASEMENTS, OR IN ANY STREET RIGHT OF WAYS.

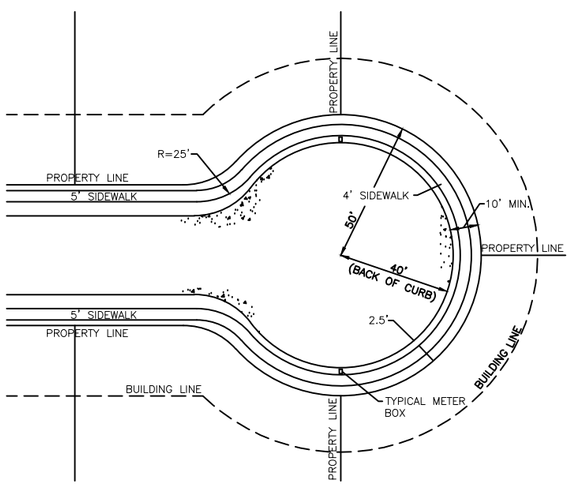

2 CUL-DE-SAC SIDEWALK

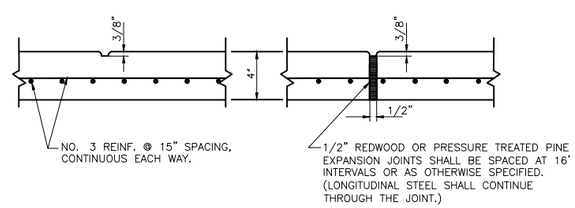

CONTROL JOINT EXPANSION JOINT

NOTE:
1. ALL EDGES SHALL BE ROUNDED WITH 3/8" RADIUS.
2. CONTROL JOINTS SHALL BE SPACED AT 4'-0" INTERVALS.
3. CONTROL JOINTS SHALL BE 3/8" DEEP AND TROWEL EDGE.
4. 1/2" EXPANSION MATERIAL REQUIRED WHERE SIDEWALKS ABUT BUILDINGS, CURBS, DRIVEWAYS, OR EXISTING SIDEWALKS.
5. EXPANSION JOINTS SHALL BE SPACED AT 16 FT. INTERVALS TYPICALLY.
6. WHERE NEW SIDEWALK IS PLACED AGAINST EXISTING SIDEWALK, SAWCUT EXISTING SIDEWALK FULL DEPTH TO AN EVEN STRAIGHT LINE PRIOR TO INSTALLATION OF THE NEW SIDEWALK.
ALL NEW SIDEWALK SHALL BE DOWELED INTO ALL ADJACENT CONCRETE STRUCTURES.

4 CONCRETE SIDEWALK

NO.	REVISIONS	DATE	NAME
△			
△			
△			
△			
△			

CITY OF LA MARQUE, TEXAS
STANDARD DETAILS

186

FOR INTERIM REVIEW ONLY

DOCUMENT INCOMPLETE:
NOT INTENDED FOR CONSTRUCTION, BIDDING, OR PERMIT PURPOSES

ENGINEER: xxxx
P.E. SERIAL No. xxxx
DATE: xxx

PROJECT TITLE:

DRAWN BY: D.P.D.

CK'D BY: D.V.H.

SHEET DESCRIPTION: PAVING DETAILS – 4

SCALE: N.T.S.

DATE:

APPROVED BY:

SHEET NO: /

APPENDIX B

COVER SHEET SIGNATURE BLOCK

CITY OF LA MARQUE, TEXAS

THIS IS TO CERTIFY THAT THESE PLANS HAVE BEEN FOUND TO BE IN GENERAL COMPLIANCE WITH THE CURRENT REQUIREMENT ESTABLISHED BY THE CITY OF LA MARQUE.

DINH V. HO, P.E., CITY ENGINEER

DATE

NOTE: CITY APPROVAL VALID FOR ONE YEAR AFTER DATE OF SIGNATURES

APPENDIX C

TITLE BLOCK

CITY OF LA MARQUE, TEXAS

THIS IS TO CERTIFY THAT THESE PLANS HAVE BEEN FOUND TO BE IN GENERAL COMPLIANCE WITH THE CURRENT REQUIREMENT ESTABLISHED BY THE CITY OF LA MARQUE.

DINH V. HO, P.E., CITY ENGINEER DATE

NOTE: CITY APPROVAL VALID FOR ONE YEAR AFTER DATE OF SIGNATURES

APPENDIX D

DESIGN MODIFICATION FORM

CITY OF LA MARQUE
DESIGN CRITERIA MODIFICATION FORM

Modifications to standards identified in the Design Criteria Manual may be permitted by the City Engineer. The modification proposal must be submitted by a Professional Engineer licensed by the State of Texas and shall follow generally accepted engineering standards for traffic, sidewalk and other infrastructure applicable, and such proposal contains the following information and substantiates the findings. If an appeal to the City Engineer decision is requested, the City Council (hereinafter referred to as "the City") will review that appeal.

PROJECT NAME: _____

This entire form must be completed in its entirety. If form is submitted incomplete, it will be administratively rejected.

PROJECT ENGINEER: _____
SUBMITTAL DATE: _____
SUBDIVISION NAME: _____

MODIFICATION LOCATION:

_____
_____
_____
_____

1. Set forth the proposed deviation to the technical standard.

SPECIFIC PROPOSED DEVIATION FROM TECHNICAL STANDARD:

_____
_____
_____
_____

2. Set forth the impact such deviation has on speed differential and street capacity, the likelihood of accidents, the long term maintenance and operation effect, the degree of functionality and efficiency, the technological advancements involved, and other relevant matters.

IMPACT OF DEVIATION:

_____
_____
_____
_____

3. Show a comparison of the technical standard to the proposed deviation with respect to overall safety and quality, speed differential, street capacity, existing and projected accidents, long-term maintenance and operation, degree of functionality, degree of efficiency, technological advancements, and other relevant matters.

COMPARISON OF TECHNICAL STANDARD TO PROPOSED DEVIATION:

_____
_____
_____
_____

4. Describe all mitigating improvements that reduce the negative impact of the proposed deviation on overall safety and quality, speed differential, street capacity, accident occurrences, long-term maintenance and operation, degree of functionality, degree of efficiency and demonstrating the degree to which the proposed deviation detrimentally affects the foregoing. Other relevant factors, including technological advances, should be explained by describing how they will affect the proposed development. Mitigating improvements can include but are not limited to, traffic control devices, pavement improvements, added acceleration or deceleration lanes or reservoirs, and other on-site improvements.

MITIGATING IMPROVEMENTS THAT REDUCE NEGATIVE IMPACT:

SUMMARY & CONCLUSION/RECOMMENDATION FOR MODIFICATION:

List of Supporting Documentation Attached? **Yes____** **No____**

Seal of Professional Engineer:

City Use ONLY

Reviewed By:

_____ _____
Date

Modification Request Approved / Denied By:
Copies of Backup Information/Notes Attached

_____ _____
City Engineer Date

CITY COUNCIL AGENDA FORM

Meeting Date: November 12, 2018 Agenda item: **9b**
Prepared by: Charlene Warren Reviewed by: *Charlene Warren*
Department: Administration

AGENDA ITEM DESCRIPTION: Discussion/possible action regarding adopting Resolution No. **R-2018-0026** to accept the draft report and call a public hearing on the land use assumptions, capital improvements plan and the imposition of impact fees

X

ATTACHMENTS FOR REFERENCE

1. **Resolution**
2. **Water and Wastewater Impact Fee Study - Draft**

STAFF BRIEFING:

- ARKK Engineers, LLC was contracted to prepare an Impact Fee study, for the purpose of establishing a capital recovery fee schedule for new development in the City's water and wastewater service area.
- This study estimated the probable growth of the City, both in terms of population increases and geographical location of the anticipated growth.
- It estimated the capital improvement costs that will be needed to provide water and wastewater utility service to this growth through the next ten (10) year development horizon.
- Lastly, the study calculated the maximum allowable impact fees that may be assessed to new development to defray the cost of the required water and wastewater improvements needed to support the development.
- The next step is to accept the report and adopt a resolution calling for a public hearing on the land use assumptions, capital improvements and imposition of impact fees.
- City Clerk has published the Public Hearing notice, calling for Public Hearing on December 10, 2018 as required by Chapter 395 of the Texas Local Government Code.
- Special legal counsel drafted the resolution and publication notice.

HISTORY: N/A

TARGET IMPLEMENTATION: February 11, 2019 or as otherwise required by statute

SIGNIFICANT ACTION DATES: N/A

CITY COUNCIL AGENDA FORM

ACTION:

☐ Ordinance ☒ Resolution

☐ Special Presentation ☐ Proclamation

☐ Finance Report ☐ Public Hearing

☒ Other – Accept Report

☒ Mark if this item does not conflict with any Resolution, Ordinance or City Charter, policies, procedures

Cost Details:	
Budgeted	N/A
Actual Bid	N/A
Estimated Expenditure	N/A
Acct. Name(s)	N/A
Line Items #	N/A
Other Funding	N/A

STAFF'S RECOMMENDATION: Motion to adopt Resolution No. **R-2018-0026**, to accept the draft report and call a public hearing on the land use assumptions, capital improvements plan and the imposition of impact fees

FISCAL IMPACT: Dependent upon future growth.

RESOLUTION NO. R-2018-0026

A RESOLUTION OF THE CITY COUNCIL OF LA MARQUE, TEXAS, ACCEPTING A REPORT AND CALLING A PUBLIC HEARING ON LAND USE ASSUMPTIONS AND CAPITAL IMPROVEMENTS PLAN RELATING TO POSSIBLE ADOPTION OF IMPACT FEES.

WHEREAS, the City of La Marque (the "City") is authorized pursuant to Texas Local Government Code, Chapter 395, as amended ("Chapter 395") to adopted impact fees on water and wastewater infrastructure; and

WHEREAS, as required by Section 395.0411 of Chapter 395, the City has provided for land use assumptions and capital improvements plan to be developed by qualified professionals using generally accepted engineering and planning practices in accordance with Section 395.014 of Chapter 395; and

WHEREAS, those qualified professionals have provided the attached La Marque Water and Wastewater Impact Fee Study, including a report on land use assumptions and a capital improvements plan; and

WHEREAS, on or before November 9, 2018, the City Clerk has caused notice, attached as Exhibit "A", to be published in a newspaper of general circulation and provided to those that have requested such notice at least 30 days prior to the proposed date of the public hearing, in accordance with Section 395.044 of the Texas Local Government Code; and

WHEREAS, on or before November 8, 2018 the City made available to the public, copies of the proposed land use assumptions and capital improvements plan related to water and wastewater facilities and impact fees;

NOW THEREFORE, BE IT RESOLVED BY THE CITY COUNCIL OF THE CITY OF LA MARQUE, TEXAS, THAT:

Section 1: The facts recited in the preamble are found to be true and correct.

Section 2: The City Council hereby accepts the report on La Marque Water and Wastewater Impact Fee Study, including the land use assumptions and capital improvements plan, attached as Exhibit B and incorporated by reference.

Section 3: The City Council hereby calls a public hearing for 6:00 P.M. on December 10th, 2018, in the regular meeting place of the City Council in the Council Chambers (next to City Hall) located at 1109-B Bayou Rd., La Marque, Texas 77568. Any member of the public has the right to appear at the hearing, which shall take

place during the regular Council meeting, and present evidence for or against the land use assumptions and capital improvements plan. A copy of the proposed land use assumptions and capital improvements plan is available at the office of the City Clerk, located at 1111 Bayou Rd., La Marque, Texas 77568.

Section 4: In the event any clause, phrase, provision, sentence, or part of this Resolution or the application of the same to any person or circumstance shall for any reason be adjudged invalid or held unconstitutional by a court of competent jurisdiction, it shall not affect, impair, or invalidate this Resolution as a whole or any part or provision hereof other than the part declared to be invalid or unconstitutional; and the City Council of the City of La Marque, Texas, declares that it would have passed each and every part of the same notwithstanding the omission of any such part thus declared to be invalid or unconstitutional, whether there be one or more parts.

PASSED, APPROVED AND ADOPTED on this the ____ day of _____, 2018.

CITY OF LA MARQUE, TEXAS

_____
Bobby Hocking
Mayor

ATTEST:

_____
Robin Eldridge
City Clerk

APPROVED AS TO FORM:

_____
Ellis J. Ortego
City Attorney

Exhibit A

NOTICE OF PUBLIC HEARING ON LAND USE ASSUMPTIONS AND CAPITAL IMPROVEMENTS PLAN RELATING TO POSSIBLE ADOPTION OF IMPACT FEES

Pursuant to Section 395.044 of the Texas Local Government Code, as amended, notice is hereby given that the City Council of the City of La Marque, Texas will hold a public hearing on Monday, December 10, 2018 beginning at 6:00 P. M. in the Council Chambers, located at 1109-B Bayou Road (next to City Hall) the purpose of which is to consider the land use assumptions and capital improvements plan under which an impact fee may be imposed. Any member of the public has the right to appear at the hearing, and present evidence for or against the land use assumptions and capital improvements plan. A copy of the proposed land use assumptions and capital improvements plan is available at the office of the City Clerk, located at 1111 Bayou Rd., La Marque, Texas 77568.

Robin Eldridge, TRMC
City Clerk
City of La Marque, Texas

Exhibit B

[final land use assumption and capital improvements plan]

NOTICE OF PUBLIC HEARING ON LAND USE ASSUMPTIONS AND CAPITAL IMPROVEMENTS PLAN RELATING TO POSSIBLE ADOPTION OF IMPACT FEES

Pursuant to Section 395.044 of the Texas Local Government Code, as amended, notice is hereby given that the City Council of the City of La Marque, Texas will hold a public hearing on Monday, December 10, 2018 beginning at 6:00 P. M. in the Council Chambers, located at 1109-B Bayou Road (next to City Hall) for the purpose of which to consider the land use assumptions and capital improvements plan under which an impact fee may be imposed. Any member of the public has the right to appear at the hearing, and present evidence for or against the land use assumptions and capital improvements plan. A copy of the proposed land use assumptions and capital improvements plan is available at the office of the City Clerk, located at 1111 Bayou Rd., La Marque, Texas 77568.

Robin Eldridge, TRMC
City Clerk
City of La Marque, Texas

WATER AND WASTEWATER IMPACT FEE STUDY

August, 2018

CITY OF LA MARQUE

August, 2018

ARKK Engineers, LLC
TBPE Firm # F-13872
7322 Southwest Fwy. Ste. 1040

DRAFT REPORT FOR REVIEW – August 28, 2018

WATER AND WASTEWATER IMPACT FEE STUDY
CITY OF LA MARQUE

AUGUST, 2018

Table of Contents

SECTION **PAGE NO.**

1. INTRODUCTION 1
2. SERVICE AREA 2
3. LAND USE ASSUMPTIONS AND POPULATION PROJECTIONS 2
4. CAPITAL IMPROVEMENT PLAN 6
5. IMPACT FEE CALCULATIONS 7

EXHIBITS AND FIGURES

Figure 1 – Service Area Map

Figure 2 – Land Use Assumptions Map

Figure 3 – Capital Improvement Plan – Water and Wastewater

Figure 4 – Development Map

1. INTRODUCTION

ARKK Engineers LLC has been contracted by the City of La Marque to prepare the City's Impact Fee study, for the purposes of establishing a capital recovery fee schedule for new development in the City's water and wastewater service area. The study was conducted in compliance with the State of Texas Local Government Code, Title 12, Planning and Development, Subtitle C, Chapter 395, "Financing Capital Improvements in Municipalities, Counties, and Certain Other Local Governments", herein referred to as "Chapter 395". Under Chapter 395 requirements, the City is required to adopt an ordinance, order, or resolution approving land use assumptions and capital improvements plan ("CIP") prior to considering adoption of a Capital Recovery Fee, also referred to herein as an "impact fee."

The objectives of this study are to:

a) Estimate the probable growth of the City; both in terms of population increases and geographical location of the anticipated growth.

b) Estimate the capital improvement costs that will be needed to provide water and wastewater utility service to this growth through the 10 year development horizon;

c) Calculate the maximum allowable impact fees that may be assessed to new development to defray the cost of the required water and wastewater improvements needed to support the development.

Impact Fees are proposed to be charged by the City of La Marque for each new connection to the City's water and/or wastewater system. Chapter 395 of the Texas Local Government Code prescribes the required process for cities to follow for adoption, amendment, and update of Impact Fees charged. Updates are performed on a five-year cycle. The update process requires engaging a Registered Professional Engineering firm to prepare the aforementioned documents and calculations. The results are then to be presented to an Advisory Committee appointed by the City Council to review and recommend adoption of land use assumptions, population projections, proposed CIP projects, and the amount of the Impact Fees to be considered and adopted by the City.

For purpose of this study, it is recommended that the City adopt a **ten year** planning period from 2018-2027 and consider factors affecting growth rates, intensity of development, known major development projects, and projections by local and state agencies to guide the land use assumptions and resulting CIP. Included in this study is a review of the growth experience during the previous planning period, projects implemented from the CIP, and the actual cost of water and wastewater projects. Water and wastewater studies and reports performed during this period are also reflected herein.

2. SERVICE AREA

The proposed service area is shown on **Figure 1**. The service area includes the area within the City of La Marque's City Limit. In the future, as areas are contemplated for annexation, the Service Area Map should be updated to reflect the annexed area. Areas outside the City Limits in which the City is considering executing a development agreement for water and/or wastewater service should also be incorporated into the service area.

3. LAND USE ASSUMPTIONS AND POPULATION PROJECTIONS

The purpose of the Land Use Map is to provide the basis for provision and requirement for projects to support new development in the service area and to project the number of equivalent service units to fairly allocate the resulting costs through the assessment of Impact Fees. The following factors were considered in developing the Land Use Map:

- The character, type, density and quantity of existing development.
- Proposed land use.
- The Water System Modeling and Planning Study (2016 ARKK Engineers).
- Availability of land for future development.
- Current growth trends in the City.
- Location and configuration of vacant land.
- Known or anticipated development projects.

See **Figure 2 - Land Use Map**

3.1 BASE DATA

The data developed for the Land Use Map was based on aerial mapping and HGAC planning resources. Population data was obtained from US Census data and the 2016 Water Modeling and Planning Study document as shown in the following **Table 1**. A review of U.S. Census data shows that in the period 2010 to 2015, the City grew from a population of 14,509 to a population of 15,908.

TABLE 1

POPULATION DATA

Plan Year	Year End	Est. Annual Number of Connections Added	Total Number of Connections	Projected Population
	2010		5,278	14,509
	2015	102	5,787	15,908
1	**2018**	**102**	**6,093**	**16,747**
2	2019	102	6,194	17,027
3	2020	102	6,296	17,307
4	2021	102	6,398	17,587
5	2022	102	6,500	17,867
6	2023	102	6,602	18,146
7	2024	102	6,703	18,426
8	2025	102	6,805	18,706
9	2026	102	6,907	18,986
10	**2027**	**102**	**7,009**	**19,266**

The table above reflects that the City can reasonably expect to have 7,009 water service connections in ten years' time.

Table 2 - Water Meter Connection Count (Year End 2017)

Meter Size:	Number of Connections	Equivalency	Equivalent Connections
5/8 x 3/4	5,524	1	5,524
1"	118	1	118
1.5"	1	1	1
2"	87	2	174
4"	8	4	32
6"	1	10	10
8"	1	30	30
	5,740		5,889

3.2 TEN YEAR GROWTH ASSUMPTIONS

The current rate of growth in terms of equivalent service units (ESU's) for the City is averaging around 93 - 102 new ESU's per calendar year

With the current total connections in the system expressed in ESU's of approximately 6,093, the growth rates in terms of equivalent connections was **1.8%** for the period 2010-2018. It is recommended that for this 2018 Impact Fee Study the City adopt a growth rate of **102 Equivalent Service Connections per year** to the water and wastewater system. This growth rate is consistent with the 2016 Water System Modeling and Planning study. For the projected 10 year period, it is estimated that 1,108 new connections will be added.

3.3 ULTIMATE POPULATION PROJECTIONS

TABLE 3 - Projected Development and Estimated Water Use

Development Area No.	Projected Development Type	Gross Acreage	Est. Acreage Developed with Water Service	Estimated Equivalent Connections per Acre	Estimated Number of New Connections	Est. Average Daily Water Use per Connection	Estimated Daily Water Usage (gpd)
1	Commercial	241.8	181.3	1	181	350	63,471
2	Commercial	81.3	61.0	1	61	350	21,351
3	Commercial	38.4	28.8	2	58	350	20,177
4	Commercial	11.9	8.9	2	18	350	6,258
5	Commercial	74.5	55.9	2	112	350	39,121
6	Commercial	19.3	14.5	2	29	350	10,127
7	Commercial	11.4	8.6	2	17	350	5,988
8	Commercial	3.5	2.6	2	5	350	1,826
9	Commercial	10.8	8.1	2	16	350	5,669
10	Commercial	18.1	13.6	2	27	350	9,491
11	Commercial	16.3	12.2	2	24	350	8,556
12	Commercial	3.5	2.6	2	5	350	1,837
13	Commercial	91.0	68.2	2	136	350	47,761
14	Commercial	54.1	40.5	2	81	350	28,378
15	Commercial	88.1	66.1	2	132	350	46,236
16	Commercial	31.1	23.3	2	47	350	16,342
17	Residential	194.4	145.8	4	583	350	204,069
18	Residential	40.7	30.5	4	122	350	42,688
19	Residential	126.5	94.9	4	379	350	132,808
20	Residential	164.3	123.2	4	493	350	172,514
21	Other - University of Houston property	923.3	692.5	0	0	350	0
					2,528		884,668

Number of Existing Equivalent Connections:	5,889
Number of Projected New Connections from Development Tracts:	2,528
Projected Infill Development (Est. 5% of Exist)	294
Projected Total Connections:*	8,711

Numbers do not include the following:

1.University of Houston 923 acre tract in Northwest La Marque

2. Subdivided but undeveloped lots in southeast La Marque adjacent to Texas City Terminal Railway property

3. Wetlands Properties in southeast La Marque

The table above reflects that the City could reasonably be expected to have **8,711** water service connections in the future. The areas of anticipated future development are shown on **Figure 4**.

4. CAPITAL IMPROVEMENT PLAN

The Impact Fee Capital Improvement Plan (CIP) includes projects anticipated to serve growth in the City during the 10-year planning period.

4.1 ELIGIBLE FACILITIES

The impact fee legislation allows those projects necessitated by growth during the planning period to be included in the impact fee calculation. Projects included in the CIP include water distribution lines and water production facilities.

4.2 CAPITAL IMPROVEMENT PROJECTS FOR 2018 IMPACT FEE STUDY

The projects eligible for Capital Recovery Fee consideration are shown on **Table 4 (Water) and Table 5 (Wastewater)**. These tables show both proposed future CIP improvements, and existing facilities that have excess capacity which can serve some or all of the projected growth during the study period. For the existing facilities, their design capacity was evaluated against existing demands and projected growth to determine the prorated value for growth during the study period.

The capital improvement project maps are shown on **Figure 3** – Water and Wastewater Capital Improvement Plan.

5. IMPACT FEE CALCULATION

This section includes a summary of the capital improvement project costs, interest costs, service unit equivalency, and a calculation of the maximum impact fee amount. The capital improvement costs included in the impact fee calculation is the portion of the project cost that is directly related to new growth. Some of the projects include replacement of an existing facility with new capacity added that will be available for future growth. **Tables 4 and 5** on the following pages show the proposed CIP Project Costs Summaries, reflecting costs prorated for new development to be used in the impact fee calculation.

TABLE 4

PROJECT COSTS SUMMARY - WATER

Project Name	Project Cost	Planned Year	Percent of Cost Related to New Development	Project Costs Related to New Development
12" Water Distribution Line, Cedar to Magnolia (Phase 1)	$397,520	2019	50%	$198,760
12" Water Distribution Line, Stonewall to IH 45 (Phase 2)	$1,393,350	2022	75%	$1,045,013
12" Water Distribution Line, Westward to Newman (Phase 3)	$1,098,920	2024	75%	$824,190
12" Water Distribution Line, 12th to Stubbs (Phase 4)	$1,370,490	2026	5%	$68,525
Water Supply Capacity Purchase from GCWA to Service 10 Year Growth *(Basis - 2015 Purchase of GCWA Mackey Plant surface water capacity, Texas City/League City from NRG)*	$1,223,377	2019	100%	$1,223,377
				$0
				$0
TOTAL WATER	**$5,483,657**			**$3,359,864**

New Connections Served in 10 Year Period by the Water Capital Improvements:	1,018
Cost Per Connection:	$3,301
Project Cost Assigned to the 10 Year Period:	**$3,359,864**

TABLE 5

PROJECT COSTS SUMMARY - WASTEWATER

Project Name	Project Cost	Planned Year	Percent of Cost Related to New Development	Project Costs Related to New Development
Wastewater Treatment Capacity to Serve 10 Year Projected Growth *(Basis - 315 gallons per day per new connection at estimated $6.00 per gallon treatment cost)*	$1,924,020	2019	100%	$1,924,020
Influent Lift Station	$ 3,450,000	2019	15%	$ 506,000
TOTAL WASTEWATER	**$5,374,020**			**$2,430,020**

New Connections Served in 10 Year Period by the Wastewater Capital Improvements:	1,018
Cost Per Connection:	$2,387
Project Cost Assigned to the 10 Year Period:	**$2,430,020**

5.1 FINANCE COSTS DETERMINATION

Costs incurred to support the debt service for the CIP list above are eligible for reimbursement in accordance with the Impact Fee Legislation. This study reflects an estimated interest rate of 3.0% per annum on bonds such as TWDB State Revolving Fund loans. On that basis, the total interest expense for the Impact Fee calculation are as follows, based on a 20 year finance term:

TABLE 6

FINANCE COSTS

	WATER	**WASTEWATER**
Project Cost	$3,359,864	$2,430,020
Interest Rate	3.00%	3.00%
Term (years)	20	20
Total Interest	$1,112,230	$804,420
Total Eligible Cost w/ Interest	**$4,472,095**	**$3,234,440**

5.2 SERVICE UNIT DETERMINATION

The equivalent meter comparison is the method used to measure consumption by new growth for impact fee purposes. The 5/8”and /3/4” water meters serve as the service unit for both water and wastewater impact fee calculations. The equivalent meter is defined as the unit equivalent to the hydraulic capacity of a ¾ inch meter. The 5/8” and 3/4” meters were selected because it represents the water meter size for an average single family dwelling. Equivalency factors were provided for larger meter sizes as developed by the American Water Works Association. **Table 7** provides these equivalency factors.

TABLE 7
Equivalent Meter Factors

METER SIZE (INCHES)	EQUIVALENCY FACTOR
5/8 OR 3/4	1.0
1”	1.67
1 ½”	3.33
2”	5.33
3” Compound	10.0
4” Compound	16.67
6” Compound	33.33
8” Compound	53.33
10” Compound	76.67

5.3 MAXIMUM IMPACT FEE CALCULATION

The maximum assessable impact fee is determined by dividing the cost of the CIP projects plus interest by the projected increase in equivalent meters for the 10 year planning period. The fee for various meter sizes is then determined by applying the factors provided in **Table 7** for all meters larger than the standard ¾" residential meter. The maximum assessable impact fee for the City of La Marque for water and wastewater is as follows:

WATER

Maximum Water impact fee = (Water Cost / increase in # of equivalent meters)

= ($4,472,095 / 1,018 new connections)

= **$4,393 per equivalent meter**

WASTEWATER

Maximum Wastewater Impact Fee = (Wastewater cost / increase in # of equiv. meters)

= ($3,234,440 / 1,018 new connections)

= $3,177 per equivalent meter

Chapter 395 of the Local Government Code was amended in 2001 to include that the City must provide a credit for the following:

Section 395.014 Paragraph a (7):

> *(A) a credit for the portion of ad valorem tax and utility service revenues generated by new service units during the program period that is used for the payment of improvements, including the payment of debt, that are included in the Capital Improvements Plan; or*
>
> *(B) In the alternative, a credit equal to 50 percent of the total projected cost of implementing the capital improvements plan.*

The Impact Fee legislation allows the City to charge an impact fee up to the amount shown as the calculated maximum. For this study, the maximum impact fee is calculated based on the simplified accounting method in item (B) above as:

50% of Water CIP Costs per Equivalent Meter = $4,393 x 50% =	**$ 2,196**
50% of Wastewater CIP Costs per Equivalent Meter = $3,177 x 50% =	**$ 1,588**
Total =	**$ 3,784**

5.4 CONCLUSIONS AND RECOMMENDATIONS

After discussion and deliberation of the Impact Fee Advisory Committee, the 2018 fee amounts to be recommended to City Council are as shown on **Table 8** below:

TABLE 8 - PROPOSED CAPITAL RECOVERY FEES

	2018 Study Max Fee w/ 50% Credit	**Proposed Fee**
Water	$2,196	$2,190
Wastewater	$1,588	$1,580
	$3,784	**$3,770**

MULTIPLYING FACTORS

Single Family Dwelling	= 1.0 ESFC (Single Family Equivalent Unit)
Apartment Complex	= 1.0 ESFC per living unit
Hotel, Motel, Resort	= 0.8 ESFC per unit or room
Mobile Home	= 1.0 ESFC per unit or room

Commercial, Retail, Institutional, Light Industrial, and all other non-residential development:

Meter Size:	**Factor**		**Total Impact Fee**
5/8" - 3/4"	1.00	ESFC's	$3,770
1"	1.67	ESFC's	$6,296
1.5"	3.33	ESFC's	$12,554
2", All Types	5.33	ESFC's	$20,094
3" Compound	10.67	ESFC's	$40,226
3" Turbine	11.67	ESFC's	$43,996
4" Compound	16.67	ESFC's	$62,846
4" Turbine	21.00	ESFC's	$79,170
6" Compound	33.33	ESFC's	$125,654
6" Turbine	43.33	ESFC's	$163,354
8" Compound	53.33	ESFC's	$201,054
8" Turbine	93.33	ESFC's	$351,854
10" Compound	76.67	ESFC's	$289,046
10" Turbine	140.00	ESFC's	$527,800
12" All Types	176.67	ESFC's	$666,046

Note 1: When separate dedicated fire system meters and systems are installed, the fire system meters are not charged a separate capital recovery fee.

Note 2: When building fire flow systems are combined with other building water systems, the City Engineer shall determine the equivalency factor based on the meter size that would be required without the fire protection component of the flow.

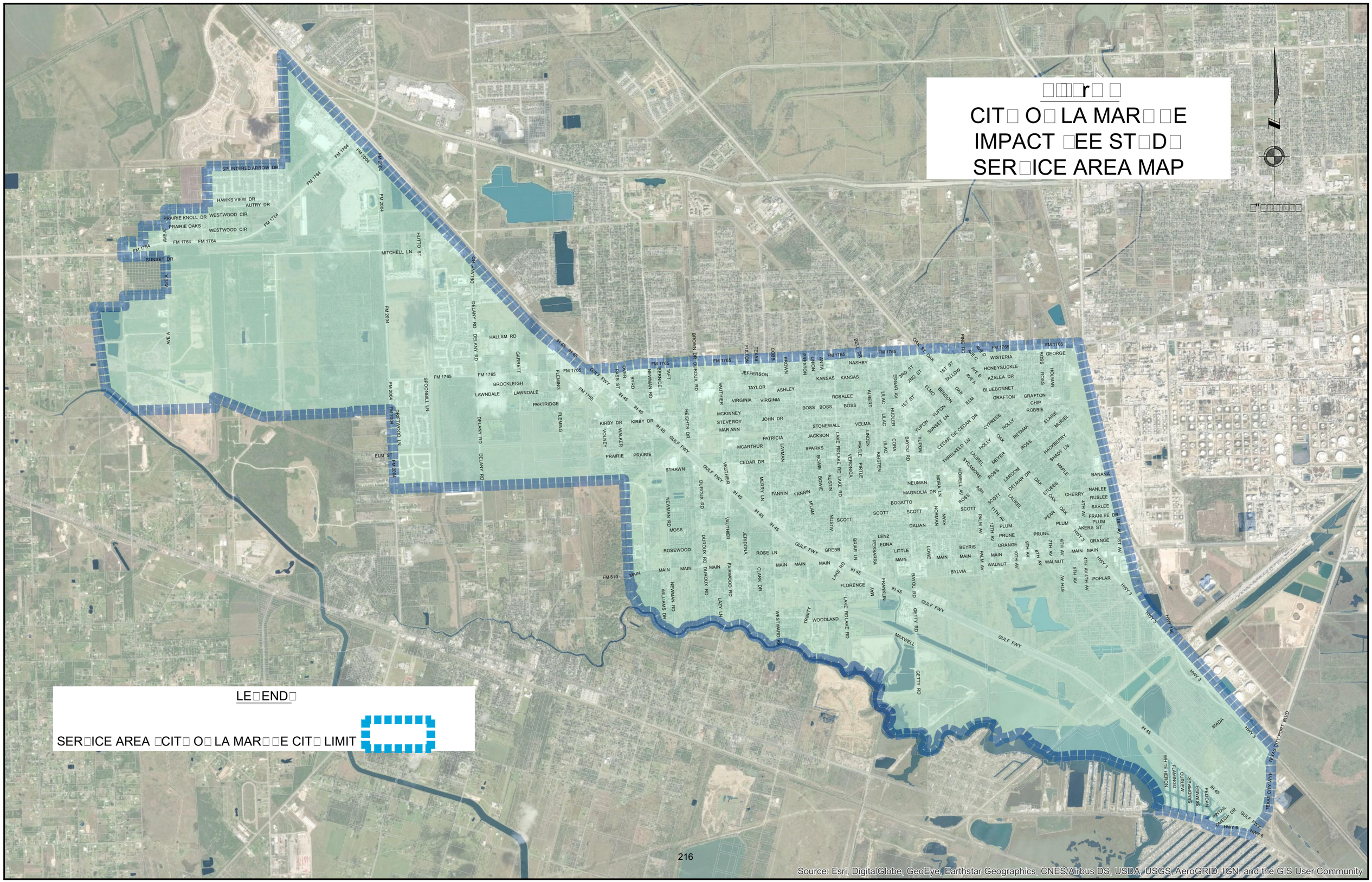
CITY OF LA MARQUE
IMPACT FEE STUDY
SERVICE AREA MAP
LEGEND
SERVICE AREA CITY OF LA MARQUE CITY LIMIT
Source: Esri, DigitalGlobe, GeoEye, Earthstar Geographics, CNES/Airbus DS, USDA, USGS, AeroGRID, IGN, and the GIS User Community

CITY OF LA MARQUE
IMPACT FEE STUDY
LAND USE MAP

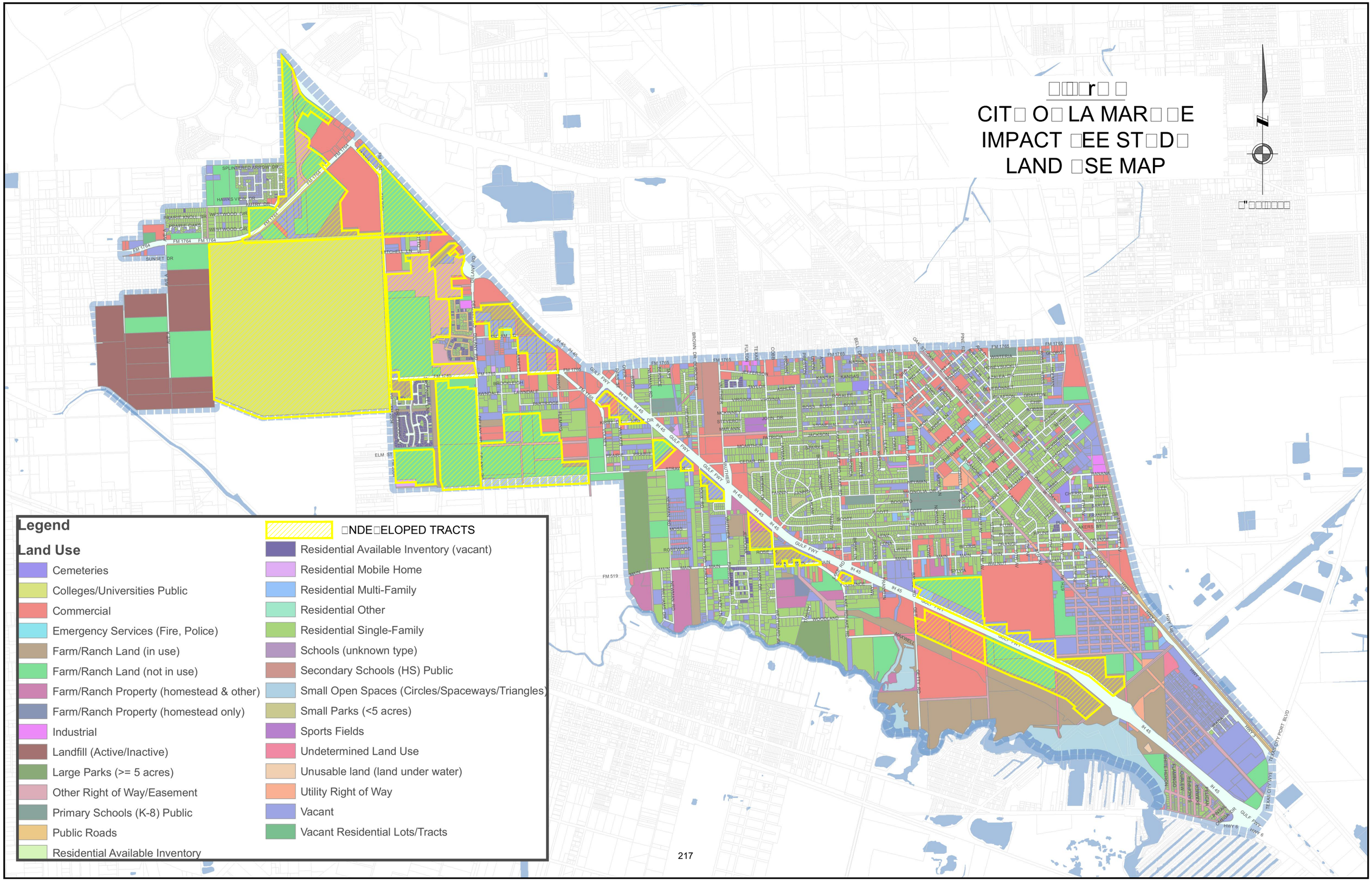

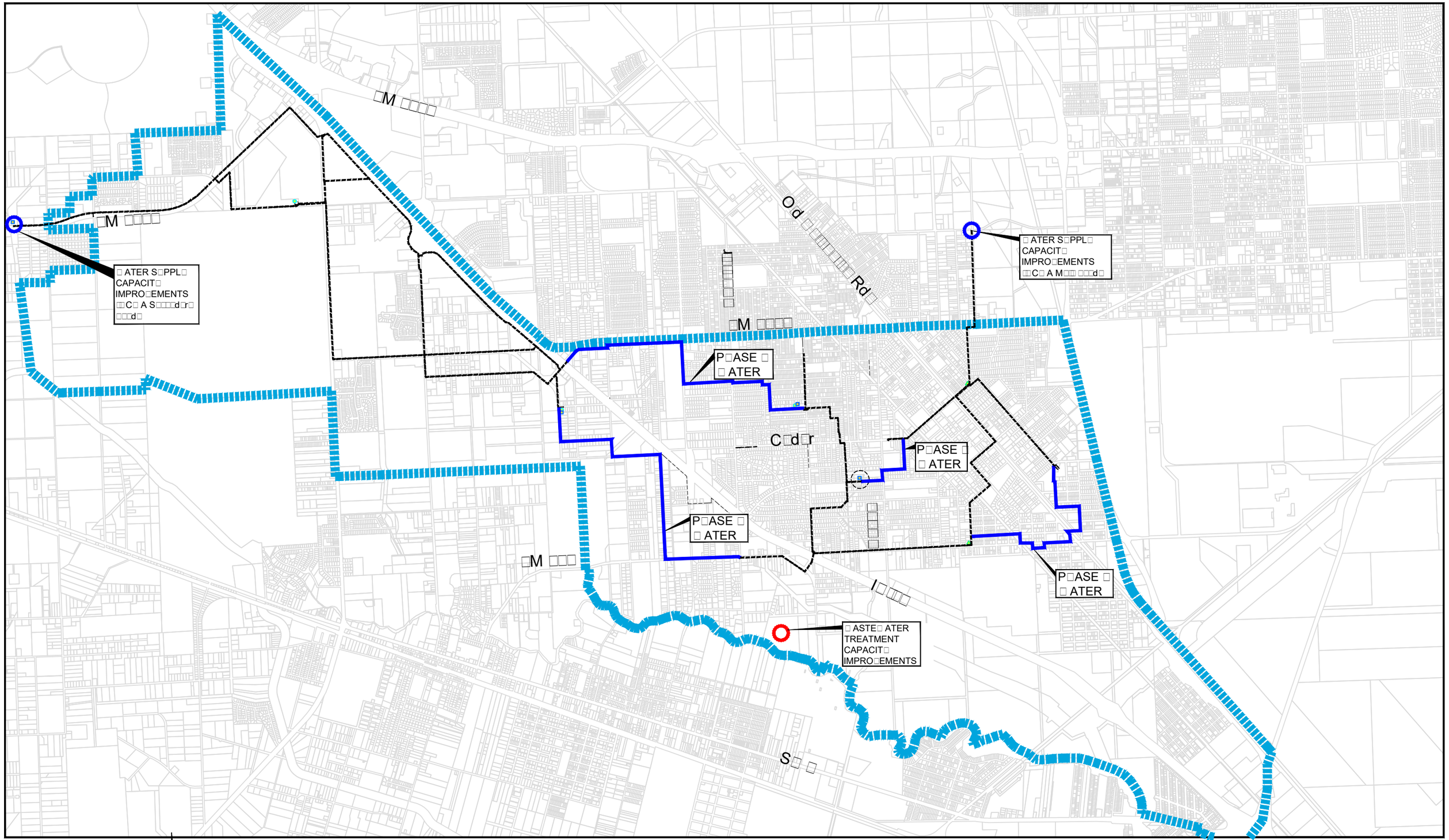

LE□END

Pr□□□□□d □□" □ □□r Tr□□□□ □□□□□ □L□r□□ D□□r□□□□□□ L□□□

E□□□□□ □ □□r Tr□□□□ □□□□□ □L□r□□ D□□r□□□□□□ L□□□

Pr□□□□□d □ □□r S□□□□□l□ □r□□□□ □□□□

Pr□□□□□d □ □□□□□ □□r Tr□□□□ □□□□l□ □r□□□□ □□□□

S□□□□□" □ □□□□□ L□

218

FIGURE 3 - Capital Improvement Plan

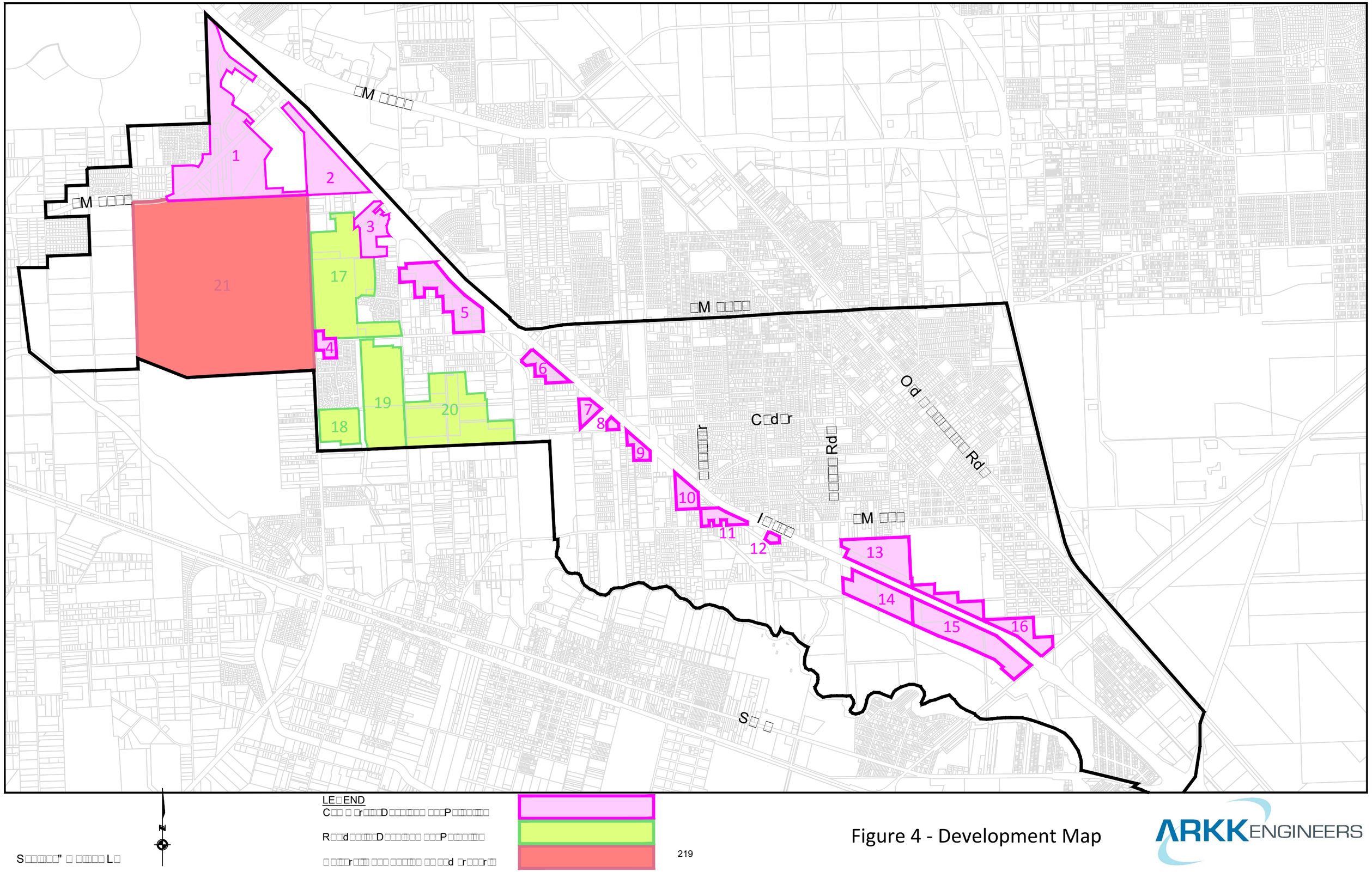

Figure 4 - Development Map

CITY COUNCIL AGENDA FORM

Meeting Date: November 12, 2018 Agenda item: **9c**
Prepared by: Amanda Hobby Reviewed by: *Charlene Warren*
Department: Public Services

AGENDA ITEM DESCRIPTION: Discussion/possible action regarding approval of the Texas Independence Trail Ride Association's request for use of Highland Bayou "Mac McGaffey" Park as an overnight stop on November 16-18, 2018 and February 15-16, 2019, as part of the traditional trail ride of the Houston Livestock Show and Rodeo; as forwarded by the Parks Board with favorable recommendation.

X

ATTACHMENTS FOR REFERENCE

1. Event Proposal
2. Special Event Permit
3. Traffic Plan

STAFF BRIEFING:

- Item was brought to the Parks Board at their October 25, 2018 meeting.
- Parks Board approved forwarding to City Council with a favorable recommendation.
- This request is being brought before Council so event organizers may move forward with planning.
- Between the Special Event Permit requirements and discussion at the Parks Board meeting, all criteria has been met.
- Signatures for application will be obtained once/if Council approves use of the park.
- The trail ride in February will be in conjunction with and timed to meet the Houston Livestock Show and Rodeo's Trail Ride schedule.
- The February 2018 trail ride garnered positive feedback from the community.

HISTORY:

February 2018 - The inaugural trail ride through La Marque was held and was a well-received, successful event.

TARGET IMPLEMENTATION: November 16-18, 2018 & February 15-16, 2019

SIGNIFICANT ACTION DATES:

10.25.2018 - Parks Board made recommendation for council to consider
11.12.2018 - City Council to consider for approval

CITY COUNCIL AGENDA FORM

ACTION:

- ☐ Ordinance
- ☐ Resolution
- ☐ Special Presentation
- ☐ Proclamation
- ☐ Finance Report
- ☐ Public Hearing
- ☒ Other – Approval of request for use of City park
- ☒ Mark if this item does not conflict with any Resolution, Ordinance or City Charter, policies, procedures

Cost Details:	
Budgeted	N/A
Actual Bid	N/A
Estimated Expenditure	N/A
Acct. Name(s)	N/A
Line Items #	N/A
Other Funding	N/A

STAFF'S RECOMMENDATION: Motion to approve the Texas Independence Trail Ride Association's request for use of Highland Bayou "Mac McGaffey" Park as an overnight stop on November 16-18, 2018 and February 15-16, 2019 as part of the traditional trail ride of the Houston Livestock Show and Rodeo; as forwarded by the Parks Board with favorable recommendation.

FISCAL IMPACT: None

TITRA Support Request

Name: Larry Myrick—409-225-3813

Date: 10-25-2018

Group: Texas Independence Trail Ride Association

Group Leadership:

- Trail Boss :---------- Jeff Simpson
- Assistant Trail Boss: —Larry Myrick

Date of Event: November 16-18, 2018 & February 15-16, 2019

Synopsis: It's almost Rodeo time again. The Houston Livestock Show and Rodeo is just around the corner. That means the Trail Rides will be starting in February. The Texas Independence Trail Ride may be interested in camping at the Bayou City Park and are respectfully asking the City of La Marque and the Parks Department to offer their support for this Texas Tradition. The Trail Rides are a long standing tradition that signals the opening of the Houston Livestock Show and Rodeo. We look forward to offering the City of La Marque and the Parks Board the opportunity to become one of the many supporting groups that help these Trail Rides reach their destinations in Downtown Houston. The Texas Independence Trail Ride will cover about 100+ miles on its trek to Houston. We would like for La Marque Park be one of the stopping points for this great traditional Trail Ride.

Key Points:

- Texas Independence Trail Ride Association is a Non-Profit Organization. Our Ride survives on the generosity of others.
- The Trail Ride normally consists of 150 Riders and 100 animals and includes Truck Trailers and Motorhomes. The group would be camping overnight then leaving the next morning.
- Our rules are if you bring it in you must take it back out. All camp sites would be cleaned and inspected by our Leadership Team.

CITY OF LA MARQUE

SPECIAL EVENT PERMIT APPLICATION

1111 BAYOU ROAD, LA MARQUE TX 77568

(409) 938-9202

All applications must be submitted no less than 90 days prior to the event.

Event Name: TITRA Warm-up Trail Ride and HLSR Week long ride Event Location (Address): Highland Bayou Park	Date of Event: (2) Events Warm-Up Ride- • Pull in Friday Nov -16-2018 • Ride Sat and Sun Nov 17 & 18 -2018 Week Long Ride • Pull in Friday Feb 15-2019 • Pull out Saturday Feb 16-2019
Type of Event: ☐ Walk/Run ☐ Mass Gathering ☐ Parade ☐ Concert ☐ Other (explain) Trail Ride	
Is the event on public property: ☐ Yes ☐ No Event requires street closure: ☐ Yes ☐ No	Estimated number of participants: 120 to 212

Time street will be closed for setup: N/A	Event start time: 9:00 a.m.	Event end time: (right-of-way open for public access) 4:00 p.m.

Permit Applicant Information:	
Applicant Name: Larry Myrick	Email: myricklarryd@msn.com
Organization Name: TITRA (Texas Independence Trail Ride Association)	
Address: 7631 Ave M	City, State, Zip: Santa Fe, TX 77510
Phone: 409-225-3813	Fax:
Alternate Permit Applicant Information (required):	
Applicant Name: Melanie Benney	Email: Txindependencetr@gmail,com
Organization Name: TITRA	

Address: 1620 Marilyn St	City, State, Zip: Alvin Tx 77511
Phone: 281-753-1469	Fax:

Location or route of event – list all requested street closures.

No Road Closures will be required._____

Detailed route will be supplied to the City Council by the first week of November.

Will any tents be used at this event? ☐ Yes ☐ No

If tents are used, *they must first be approved by the Fire Marshal.* Attached to this application must be a copy of a certificate provided by the promoter or sponsor that the tents and tarpaulins meet the requirements for fire resistance as prescribed in the National Fire Protection Association "Standard Methods of Fire Tests for Flame-Resistant Textiles and Films NFPA No. 701" and that such fire resistance is effective for the period specified by the certificate.

Certificate attached: ☐ Yes ☐ No

Tents approved by Fire Marshal (only if tents are used):
N/A

Security: Prior to any permit being issued by the City of La Marque, the promoter shall provide for security for the event. The number of security officers required will be determined by the Chief of Police (or designee), with a minimum of two (2) officers.

Will alcohol be sold, served, or consumed? ☐ Yes ☐ No Number of Officers required:
___N/A_____

Security Officers provided by:
____TITRA_____

_____

Security Officers will be: (attach additional sheet, if necessary) _____Trail Ride Scouts experienced in Traffic control_____

_____

Hours scheduled: ____09:00 a.m. to 4:00 p.m._____

Approved by Chief of Police: _____

Sound Amplification: The City of La Marque Code of Ordinances Section 44-14 "Noises as Public Nuisances" requires a permit application to be submitted to the Chief of Police for any event utilizing sound amplification. Copy of approved permit must be attached to this application.

Permit attached: ☐ Yes ☐ No N/A

Fire Watch/Emergency Medical Services: Prior to any permit being issued by the City of La Marque, the promotor shall make contact with the Fire Chief (or designee) to determine if the event necessitates having fire and/or emergency medical staff on property during the event. Staff determined by Fire Chief.

Fire Watch required: ☐ Yes ☐ No If yes, number of personnel required: _____

Emergency Medical Services required: ☐ Yes ☐ No If yes, number of personnel required: _____

Approved by Fire Chief: _____

Public Services: Prior to any permit being issued by the City of La Marque, the promoter shall make contact with the Director of Public Services (or designee) for approval of a traffic control plan. ***Traffic control is the responsibility of the promoter and a copy of the traffic plan must accompany this application.***

Traffic Plan attached: ☐ Yes ☐ No

Approved by Director of Public Services: _____

Emergency Management: If the event is to be held outdoors, an emergency plan must be submitted to the Emergency Management Coordinator for approval. The EMC will determine whether a plan is necessary.

Plan Needed: ☐ Yes ☐ No Acknowledged by EMC: _____

TITRA Traffic control plan:

All traffic will be directed by experienced Trail Scouts with orange flags and radio communication. Every effort will be made not to impede the normal flow of traffic with the understanding that when crossing major intersections the traffic will be held until all wagons and riders have cleared the intersection.

This permit includes the following provisions to which applicant agrees by signature:

1. The permit holder must provide proof of insurance as per "Exhibit A," attached. Additionally, the City of La Marque ***must*** be listed as an additional insured or an insured. Insurance required shall be issued by a company or companies of sound and adequate financial responsibility and authorized to do business in the State of Texas. All policies shall be subject to examination by the City Manager's office for their adequacy as to form, content, form of protection, and providing company.

   a **TITRA is insured by the Houston Livestock Show and Rodeo through the John L. Wortham & Son & L.L.P from December 15 2017 through December 15 2018**

   b **UNDER TEXAS LAW (CHAPTER 87, CIVIL PRACTICE AND REMEDIES CODE), A FARM ANIMAL PROFESSIONAL IS NOT LIABLE FOR AN INJURY TO OR THE DEATH OF A PARTICIPANT IN FARM ANIMAL ACTIVITIES RESULTING FROM THE INHERENT RISKS OF FARM ANIMAL ACTIVITIES.**

2. The permit holder is responsible for any damages. Permit holder is responsible for cleanup of garbage and litter generated by the event.

3. Other permits may be necessary for your event, i.e. alcohol/food sales, vendor permits, etc.

This permit is subject to the City of La Marque Code of Ordinances, the City Charter, and all rules and regulations governing street rights-of-way. The applicant agrees to indemnify and hold harmless the City of La Marque from and against all liabilities, claims, demands, judgements, losses and all lawsuits or in equity, cost and expenses, including reasonable attorney fees, for injury or death of any person or loss or damage to the property of any person, firm, organization, or corporation, including both parties hereto and their employees, arising from the holding of such special event. If applicable, the applicant agrees that during the use of the public area, the sponsoring organization will not exclude any person from participation in, deny anyone the benefits of, or otherwise subject anyone to discrimination because of race, color, national origin or disability.

Applicant's Signature: Larry Myrick	Date: 10-21-2018
For Staff Use Only: Requires Council Approval: ☐ Yes ☐ No If Approved, Date Approval Received: _____ Approved bv City Manager or Designee: _____ Date: _____	Permit Issued: By: _____ Date: _____

Route for Saturday Nov-17-2018

14 Miles

Link to : Route Map TITRA Warmup Sat Nov 17 2018

Left	Maxwell St	When leaving the Park
Right	Lake	Road curves to the right and becomes Lake
Right	Lake	At the stop sign bear right to go under I-45
Right	FM-519	Bear right under I-45
Left	Bayou	Turn Left at the Traffic light
Right	1st street	
Left	Laurel	At the stop sign
BREAK	**On the Right**	**Gravel and grass parking area middle of this block**
Right	Laurel	Leaving Break
Right	2nd st	Leaving break immediate Right on 2nd
Right	HWY-3	Get in Left Lane for Left turn at the light
Left	1st st	Cross the tracks and make an immediate Right on Oak
Right	Oak st	Stay on Oak to FM-519
Right	FM-519 (Main)	1 mile on Main and we will be turning Left on 8th st
Left	8th st	Just past drainage canal at Blue building. Follow around to Lunch Break
Left into parking lot	**Lunch in Parking lot**	**The Back Porch Bar parking lot. Follow drive to the right**
Pull out	Palm st	Pull out strait on Palm towards Main (FM-519) Cross Main
Left	Ross	Palm dead ends on Ross
Right	Howell	Immediate Right on Howell
Left	Magnolia	Immediate Left on Magnolia
Right	I-45 Feeder	Stay in Right lane
Right	Doroux	
BREAK	**On the Right**	**Gravel and grass parking area first drive past Tennis courts**
Right	Doroux	Pull out from Break take a right on Doroux
Right	FM-1765	
Right	Bayou	Traffic light at Bayou
Left	Laurel	Break at same place as first break
Left Pull out	Laurel	Stay on Laurel to Cedar
Right	Cedar	Stay on Cedar to Lake
Left	Lake	Lake will take us back to I-45 go under I-45 and at stop sign turn Left
Left	Lake	At stop sign past I-45
		Follow road around to camp

Route for Sunday Nov-18-2018

Link to: Route Map TITRA Warmup Sun Nov 18 2018

8 Miles

Right	On Bayou Rd	Go over sea wall to I-45 South
Right	I-45 South Feeder	Stay on feeder to the Santa Fe Overpass
Left	Under I-45	Go under I-45 Santa Fe Overpass bear Left to I-45 feeder North bound
Right	Franklin	Break on Franklin in road.
Break	**In the Road**	**Keep wagons to the Left**
Left	FM-519	Keep in Right Lane on FM-519:
Slight Right	I-45 Feeder	Slight right through traffic light to stay on I-45 North Feeder
Right	Vauther	Exit right off feeder and go to stop sign
Left	Cedar	Then immediate left on Vauther to go over I-45
Left	Clover Bend at bottom of Overpass	This will be entry to I-45 South
Right	I-45 South Feeder	
Right	Westward	First road to the right at the yellow church sign
Left	Woodland	Woodland is other side of FM-519
Right	Lake	Follow road to camp

CITY COUNCIL AGENDA FORM

Meeting Date: November 12, 2018 Agenda item: **9d**
Prepared by: Sussie Sutton Reviewed by: *Charlene Warren*
Department: Development Services

AGENDA ITEM DESCRIPTION: Discussion/possible action regarding adopting Ordinance No. **O-2018-0015,** changing the zoning classification from C-1 Commercial to R-1 Residential, as recommended by the Planning and Zoning Commission, of Lot 7A of McNeels Subdivision, Re-Plat of Lots 7 and 8 a subdivision in Galveston County, Texas, according to the map or plat thereof recorded under Clerks file number 2017060207 of the Plat record of Galveston County. (Known as Spruce St. PID# 721063); amending the Zoning Map of the City of La Marque adopted the 12th day of December 2005, by Ordinance 953. *THIS IS THE FIRST READING*

X

ATTACHMENTS FOR REFERENCE

1. Ordinance/Exhibit A
2. Survey
3. Site Plan
4. Zoning Map
5. City Planning Letter
6. Application
7. Planning & Zoning Draft Minutes – October 9, 2018
8. Recommendation Letter from P & Z

STAFF BRIEFING:

- Ms. Michelle Rucinski purchased this entire property on October 7, 2015. The property is 1.1087 acres and includes a residential home that was constructed in 1960.
- At the time of purchase the owner was not aware that the property was non-conforming and zoned Commercial. It was her plan to have her daughter live in the home and she would construct a residence on the same lot.
- To do this, she had to re-plat the property so that the second residence could be constructed on its own lot.
- On June 13, 2017, the Planning & Zoning Commission considered part of this property for a Replat to combine Lots 7 & 8 into Lot 7A.
- When Ms. Rucinski presented her residential construction plans she was made aware that she could not construct a home on a property that was Zoned C-1 Commercial.
- Re-zone request was brought before Planning & Zoning and is forwarded to Council with a favorable recommendation.

HISTORY:

8.28.2018 - New residential application received.
9.6.2018 – Re-zone application received.
10.9.2018 - Planning & Zoning considered the rezone request

CITY COUNCIL AGENDA FORM

TARGET IMPLEMENTATION: After the second reading and adoption of the Ordinance in favor of the Re-zone (and according the City Charter)

SIGNIFICANT ACTION DATES:
10.9.2018 - Planning & Zoning Commission considered the re-zone.

ACTION:

- ☒ Ordinance
- ☐ Resolution
- ☐ Special Presentation
- ☐ Proclamation
- ☐ Finance Report
- ☐ Public Hearing
- ☒ Other- Re-zone
- ☒ Mark if this item does not conflict with any Resolution, Ordinance or City Charter, policies, procedures

Cost Details:	
Budgeted	
Actual Bid	
Estimated Expenditure	
Acct. Name(s)	
Line Items #	
Other Funding	

STAFF'S RECOMMENDATION: Motion to adopt Ordinance No. **O-2018-0015**, changing the zoning classification from C-1 Commercial to R-1 Residential, as recommended by the Planning and Zoning Commission, of Lot 7A of McNeels Subdivision, Re-Plat of Lots 7 and 8 a subdivision in Galveston County, Texas, according to the map or plat thereof recorded under Clerks file number 2017060207 of the Plat record of Galveston County. (Known as Spruce St. PID# 721063.); amending the Zoning Map of the City of La Marque adopted the 12th day of December 2005, by Ordinance 953. *THIS IS THE FIRST READING*

FISCAL IMPACT: While this property is zoned C-1 General Commercial, it is surrounded by a residentially zoned residential housing subdivision. The likelihood that a commercial business would engage in developing a business on this property is highly unlikely. Rezoning the property to R-1 Single Family Residential will allow Mrs. Rucinski to permit and build a residential home, increasing the property value and therefore, the taxable value.

ORDINANCE NO. O-2018-0015

AN ORDINANCE OF THE CITY COUNCIL OF THE CITY OF LA MARQUE, TEXAS, CHANGING THE ZONING CLASSIFICATION FROM C-1 COMMERCIAL TO R-1 SINGLE FAMILY RESIDENTIAL, BEING LOT 7A, OF MCNEEL'S SUBDIVISION, RE-PLAT OF LOTS 7 AND 8 A SUBDIVISION IN GALVESTON COUNTY, TEXAS, ACCORDING THE MAP OR PLAT THEREOF RECORDED UNDER CLERKS FILE NUMBER 2017060207 OF THE PLAT RECORDS OF GALVESTON COUNTY; AMENDING THE ZONING MAP OF THE CITY ADOPTED ON THE 12TH DAY OF DECEMBER 2015, BY ORDINANCE NUMBER 953.

WHEREAS, Michelle C. Rucinski (the "Applicant"), owner of the property on Spruce Street described as Lot 7A, of McNeel's Subdivision, Re-Plat of Lots 7 and 8 a subdivision in Galveston County, Texas, according to the map of plat thereof recorded under Clerks file number 2017060207 of the Plat Records of Galveston County (the "Property"), generally situated in the corporate city limits of the City of La Marque, Texas (the "City"), and being more particularly described as Lot 7A **in Exhibit** "A" attached hereto and made a part hereof for all purposes; and

WHEREAS, the Property presently has a zoning classification of C-1 Commercial under Chapter 71: Zoning of the Code of ordinances of the City of La Marque; and

WHEREAS, the applicant has made application to the City to change such zoning classification of said property from C-1 Commercial to R-1 Single Family Residential as authorized by the City's Zoning Ordinance; and

WHEREAS, the Property described as Lot 7A, in Exhibit "A" attached hereto and made a part hereof for all purposes presently has a zoning classification of C-1 Commercial under Chapter 71: Zoning of the Code of ordinances of the City of La Marque; and

WHEREAS, City Staff has made recommendation to the City to change such zoning classification of Lot 7A, described in Exhibit "A" attached hereto and made a part hereof for all purposes said properties from C-1, Commercial to R-1, Single Family Residential as authorized by the City' s Zoning Ordinance; and

WHEREAS, the City Council of the City has conducted, in time and manner and after the notice required by law and Chapter 71: Zone of the Code of Ordinances of the City of La Marque, a public hearing on such request in classification; and

WHEREAS, the City Council now deems it appropriate to grant such requested change in classification;

NOW THEREFORE, BE IT ORDAINED BY THE CITY COUNCIL OF THE CITY OF LA MARQUE, TEXAS THAT:

Section 1. The facts and the matters set forth in the preamble on this Ordinance are hereby found to be true and correct.

Section 2. The zoning classification of the certain tracts Lots 7A as described in Exhibit "A", attached hereto and made a part hereof for all purposes, fronting the intersection of Spruce Street in the City of La Marque, is hereby changed from Commercial to Single Family Residential as authorized by the Chapter 71: Zoning of the Code of Ordinances of the City of La Marque.

Section 3. The zoning map of the City, adopted on the 12th day of December, 2005 by ordinance number 953, shall be revised and amended to show the zoning reclassification of said tract of land as provided in section 2 hereof, with the appropriate reference to the number and effective date of this Ordinance and brief description of the nature of the change.

Section 4. This Ordinance shall in no manner amend, change, supplement, or revise any provision of any ordinance of the City, save and except the change in zoning classification of the tract described in section 2 hereof.

Section 5. In the event any clause, phrase, provision, sentence or part of this Ordinance or the application of the same to any person or circumstances shall for any reason be adjudged invalid or held unconstitutional by a count of competent jurisdiction, it shall not affect, impair, or invalidate this Ordinance as a whole or any part or the provision hereof other than the part declared to be invalid or unconstitutional; and the City council of the City of La Marque, Texas, declares that it would have passed each and every part of the same notwithstanding the omission of any such part thus declared to be invalid or unconstitutional, whether there be one or more parts.

PASSED AND APPROVED by the City Council of the City of La Marque, Texas, on the First reading this the ____ day of _____, 2018.

PASSED, APPROVED AND ADOPTED by the City Council of the City of La Marque, Texas, on the Second and Final reading this the ____ day of _____, 2018.

CITY OF LA MARQUE, TEXAS

_____
Bobby Hocking, Mayor

ATTEST:

_____
Robin Eldridge, TRMC
City Clerk

APPROVED AS TO FORM:

_____

Ellis J. Ortego
City Attorney

EXHIBIT "A"

EXHIBIT "A"

stewart title

Deborah Maduzia
Escrow Officer

Stewart Title Company
1980 Post Oak Blvd.
Houston, TX 77056
(713) 232-4380 Phone
(713) 629-2255 Fax
deborah.maduzia@stewart.com

September 06, 2018

File No.: 151670303377cpl2

To Whom It May Concern:

This company certifies that a diligent search of the Real Property Records of Stewart Title Company's abstract plant has been made, as to the herein described property, and as of 8:00 A.M. on the , the last Deed that we find, of record, reflects the record owner to be:
MICHELLE M. RUCINSKI

Legal Description:

Lots 9 thru 12 AND THE NORTH 26 FEET OF LOT 13 IN BLOCK 5 AND LTOS 12 AND 13 AND THE NORTH 20 Feet in Block 6 of McNeel's Subdivision, a Subdivision in Galveston County, Texas according to the Map or Plat as recorded in Volume 275 Page 379 and 380 of the Deed Records of Galveston County, Texas SAVE AND EXCEPT:

Lot 7A, of McNEEL'S Subdivision, RE-PLAT OF LOTS 7 AND 8 a subdivision in Galveston County, Texas, according to the map or plat thereof recorded under Clerks file number 2017060207 of the Plat records of Galveston COunty,

Subject to the following:

1. Restrictions:

Restrictive Covenants as set out in Film Code No. 2017/060207 of the Map or Plat Records of Galveston County, Texas.

2. Easements/Other Exceptions:

Subject to a 25 foot building set back line along the front Property Line per the recorded plat.

Subject to all matters as shown and/or reflected on the proposed plat.

3. Liens/Misc:

Liens in favor of The First National Bank of Bellville as set forth in instrument as recorded under clerks file number 2015064136 of the Official Public Records of Galveston County, Texas.

For information only: The vesting deed is recorded under clerks file number 2015064135 of the Official Public Records of Galveston County, Texas.

No examination has been made as to Abstracts of Judgments, State or Federal Tax Liens, the status of taxes, tax suits or paving assessments.

This letter is issued for platting purposes only. Liability of Stewart Title Company for mistakes or errors in this letter is hereby limited to the cost of said letter.

The letter is issued with the express understanding, evidenced by the acceptance thereof, that Stewart Title Company does not undertake to give or express any opinion as to the validity or effect of the instruments listed, and this letter is neither a guaranty or warranty of title.

Liability hereunder is limited to the amount paid for same. This report is furnished solely as an accommodation to the party requesting same and should not be relied upon, as a warranty or representation as to the title to the property described herein and may not be given to or used by any third party. Stewart Title Company assumes no liability whatsoever for the accuracy of this report, nor for any omission or error with respect hereto. **You agree to release, indemnify and hold harmless Stewart Title Company because of any negligence by Stewart Title Company (whether sole, joint or otherwise) for any claim, loss, liability or damages arising out of this report.** This report is not title insurance. If a policy of title insurance is purchased, any liability thereunder shall be determined solely by the terms of such policy.

Sincerely,
Stewart Title Company

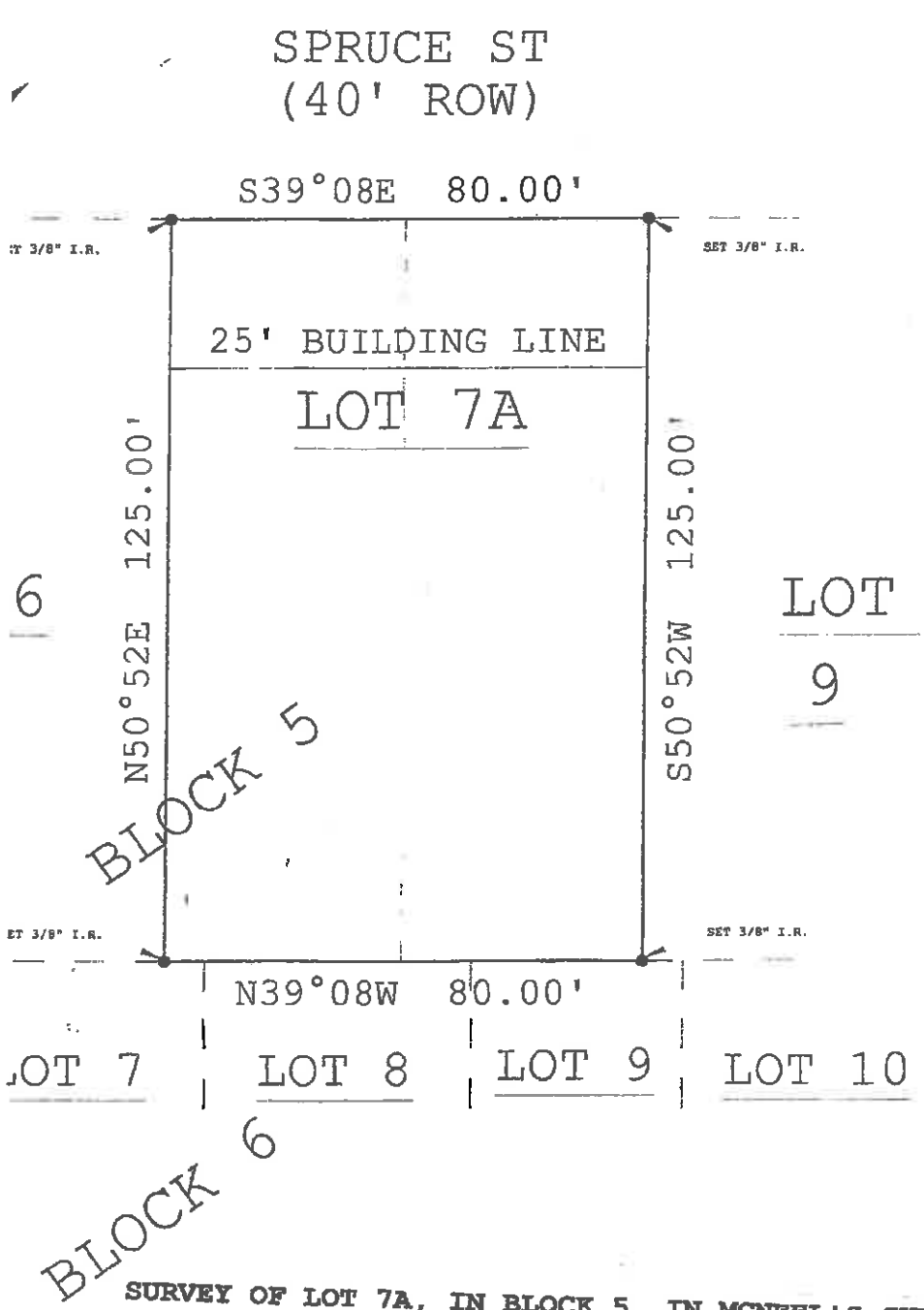

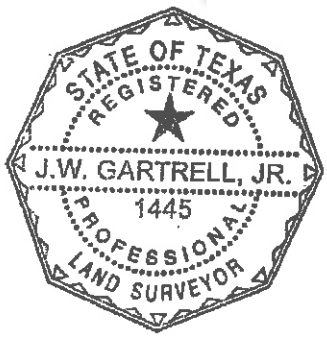

SURVEY OF LOT 7A, IN BLOCK 5, IN MCNEEL'S SUBDIVISION OF LOTS 7 AND 8, A SUBDIVISION IN GALVESTON COUNTY, TEXAS, ACCORDING TO THE RECORDED MAP OR PLAT THEREOF RECORDED IN THE OFFICE OF THE COUNTY CLERK OF GALVESTON COUNTY, TEXAS

JOB NO. 6900
M. M. RUCINSKI
PO BOX 113
PORTER, TX 77365
713-302-8488

SURVEYED JUNE 4, 2018

BY:

JAMES W. GARTRELL, JR., PE, RPLS
CONSULTING ENGINEER - SURVEYOR
TEXAS P.E. #22590 - TEXAS R.P.L.S. #1445

GULF COAST ENGINEERING & SURVEYING
TBPE FIRM #4534 - TBPLS FIRM #10061900
P.O. BOX 382 LA MARQUE, TEXAS 77568
409 / 935-2462 TEXAS CITY 281 / 488-6969 HOUSTON

#5b McNeels

STATE OF TEXAS

COUNTY OF GALVESTON

KNOW ALL MEN BY THESE PRESENTS:

THAT, MICHELLE M. RUCINSKI, OWNER OF THE PROPERTY SUBDIVIDED IN THE ABOVE AND FOREGOING MAP OF MCNEEL'S SUBDIVISION RE-PLAT OF LOTS 7 AND 8, DO HEREBY MAKE SUBDIVISION OF SAID PROPERTY, ACCORDING TO THE LINES THEREIN SHOWN, AND DESIGNATE SAID DIVISION AS LOT 7A, BEING A 0.2296 ACRE TRACT OR PARCEL OF LAND OUT OF BLOCK 5, MCNEELS'S SUBDIVISION, A SUBDIVISION IN GALVESTON COUNTY, TEXAS.

WITNESS OUR HANDS IN THE CITY OF LA MARQUE, COUNTY OF GALVESTON, THIS _____ DAY OF _____, 2017.

BY:_____
MICHELLE M. RUCINSKI
OWNER

STATE OF TEXAS

COUNTY OF GALVESTON

BEFORE ME, THE UNDERSIGNED AUTHORITY, ON THIS DAY PERSONALLY APPEARED MICHELLE R. RUCINSKI, KNOWN TO ME TO BE THE PERSON WHOSE NAME IS SUBSCRIBED TO THE FOREGOING INSTRUMENT AND ACKNOWLEDGED TO ME THAT HE EXECUTED THE SAME FOR THE PURPOSES AND CONSIDERATIONS THEREIN SET FORTH.

GIVEN UNDER MY HAND AND SEAL OF OFFICE, THIS _____ DAY OF _____, 2017.

_____
NOTARY PUBLIC IN AND FOR
THE STATE OF TEXAS
MY COMMISSION EXPIRES:_____

THIS IS TO CERTIFY THAT I, JAMES W. GARTRELL, JR. A REGISTERED PROFESSIONAL LAND SURVEYOR OF THE STATE OF TEXAS, HAVE PLATTED THE ABOVE SUBDIVISION FROM AN ACTUAL SURVEY ON THE GROUND AND THAT ALL BLOCK CORNER, ANGLE POINTS, AND POINTS OF CURVE ARE PROPERLY MARKED AND THAT THIS PLAT CORRECTLY REPRESENTS THAT SURVEY MADE UNDER MY DIRECTION.

_____
JAMES W. GARTRELL, JR.
REGISTERED PROFESSIONAL LAND SURVEYOR
TEXAS REGISTRATION NO. 1445

WE HEREBY CERTIFY THAT THE ABOVE AND FOREGOING MCNEEL'S SUBDIVISION RE-PLAT OF LOTS 7 AND 8, WAS APPROVED BY THE PLANNING COMMISSION OF THE CITY OF LA MARQUE, TEXAS, ON THE _____ DAY OF _____, A.D., 2017, AND BY THE CITY COUNCIL OF THE CITY OF LA MARQUE, TEXAS, ON THE _____ DAY OF _____, A.D., 2017.

_____ CHAIRMAN, PLANNING COMMISSION

_____ MAYOR OF THE CITY OF LA MARQUE, TEXAS

STATE OF TEXAS

COUNTY OF GALVESTON

I, DWIGHT SULLIVAN, COUNTY CLERK, GALVESTON COUNTY, DO HEREBY CERTIFY THAT THIS WRITTEN INSTRUMENT WAS FILED FOR RECORD IN MY OFFICE ON _____, 2017 AT _____ O'CLOCK __.M., AND DULY RECORDED ON _____, 2017 AT _____ O'CLOCK __.M. IN PLAT RECORD _____ MAP NUMBER _____ GALVESTON COUNTY MAP RECORDS.

WITNESS MY HAND AND SEAL OF OFFICE, AT HOUSTON, THE DAY AND DATE LAST ABOVE WRITTEN.

_____
DWIGHT D. SULLIVAN, COUNTY CLERK
GALVESTON COUNTY, TX

BY:_____, DEPUTY

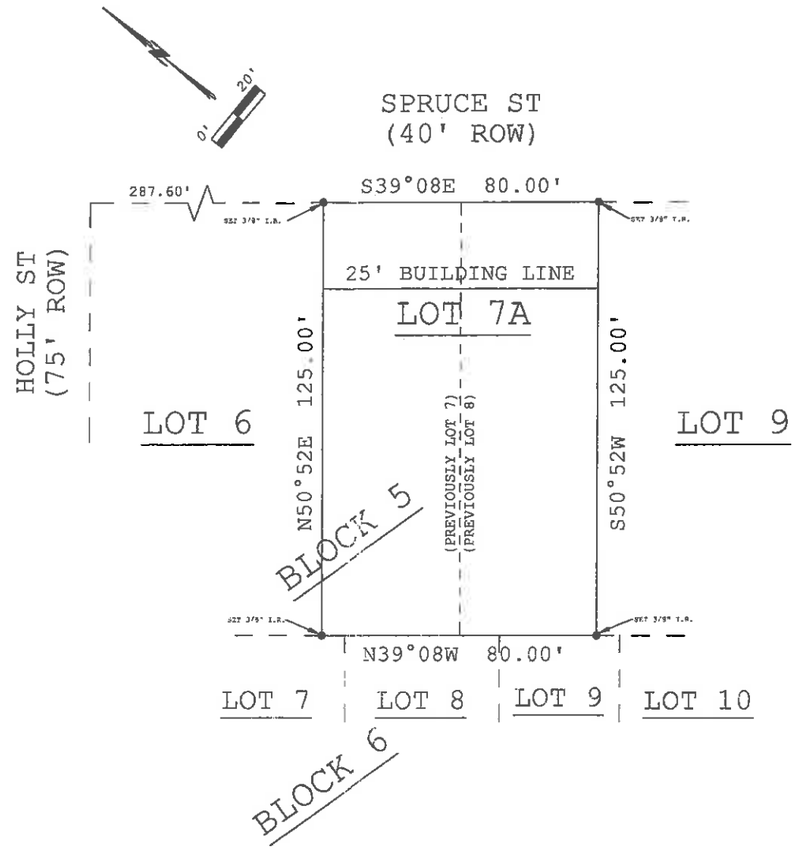

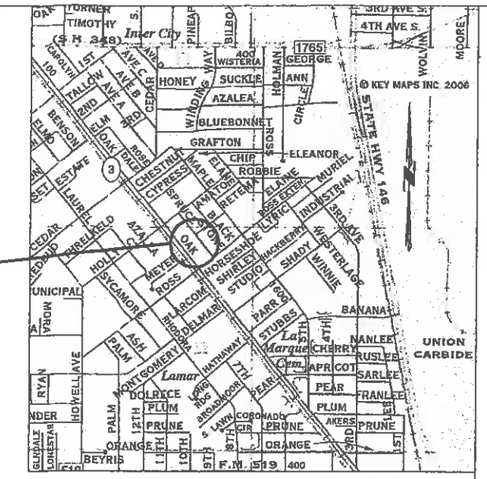

VICINITY MAP
KEY MAP 737-Q

NOTES:

1. THIS PROPERTY LIES IN ZONE C. FLOOD INSURANCE RATE MAP COMMUNITY PANEL NUMBER 48548600 10D MAP REVISED FEBRUARY 16, 1983.
2. THIS PROPERTY LIES WITHIN THE BOUNDS OF THE TEXAS CITY INDEPENDENT SCHOOL DISTRICT.
3. THIS PROPERTY LIES WITHIN THE INCORPORATED LIMITS OF THE CITY OF LA MARQUE, GALVESTON COUNTY, TEXAS.

MCNEEL'S SUBDIVISION
RE-PLAT OF LOTS 7 AND 8

BEING A RE-PLAT OF LOTS 7 AND 8, IN BLOCK 5, OF MCNEEL'S SUBDIVISION, A SUBDIVISION IN GALVESTON COUNTY, TEXAS, ACCORDING TO THE RECORDED MAP THEREOF RECORDED IN VOLUME 275, PAGES 378 AND 379 IN THE GALVESTON COUNTY RECORDS.
CITY OF LA MARQUE
GALVESTON COUNTY, TEXAS
1 LOT 1 BLOCK
(0.2296 ACRES)

OWNER:
MICHELLE M. RUCINSKI
PO BOX 113
PORTER, TX 77365

MCNEEL'S SUBDIVISION
REPLAT OF LOTS 7 AND 8

GULF COAST ENGINEERING AND SURVEYING
P.O. BOX 362 LA MARQUE, TX 77568
JAMES W. GARTRELL JR., P.E., R.P.L.S. TEL. 409-935-2462 TEL. 281-486-6869
FIRM REGISTRATION NUMBER: F-4534 FAX. 409-935-9367

SHEET NO.

MARCH 28, 2017

JOB NO.

721063 LOT 7A Replat was from 198799

Sussie Sutton

From: Sussie Sutton
Sent: Thursday, September 13, 2018 10:49 AM
To: Sussie Sutton
Subject: 1101 Oak - ReZone

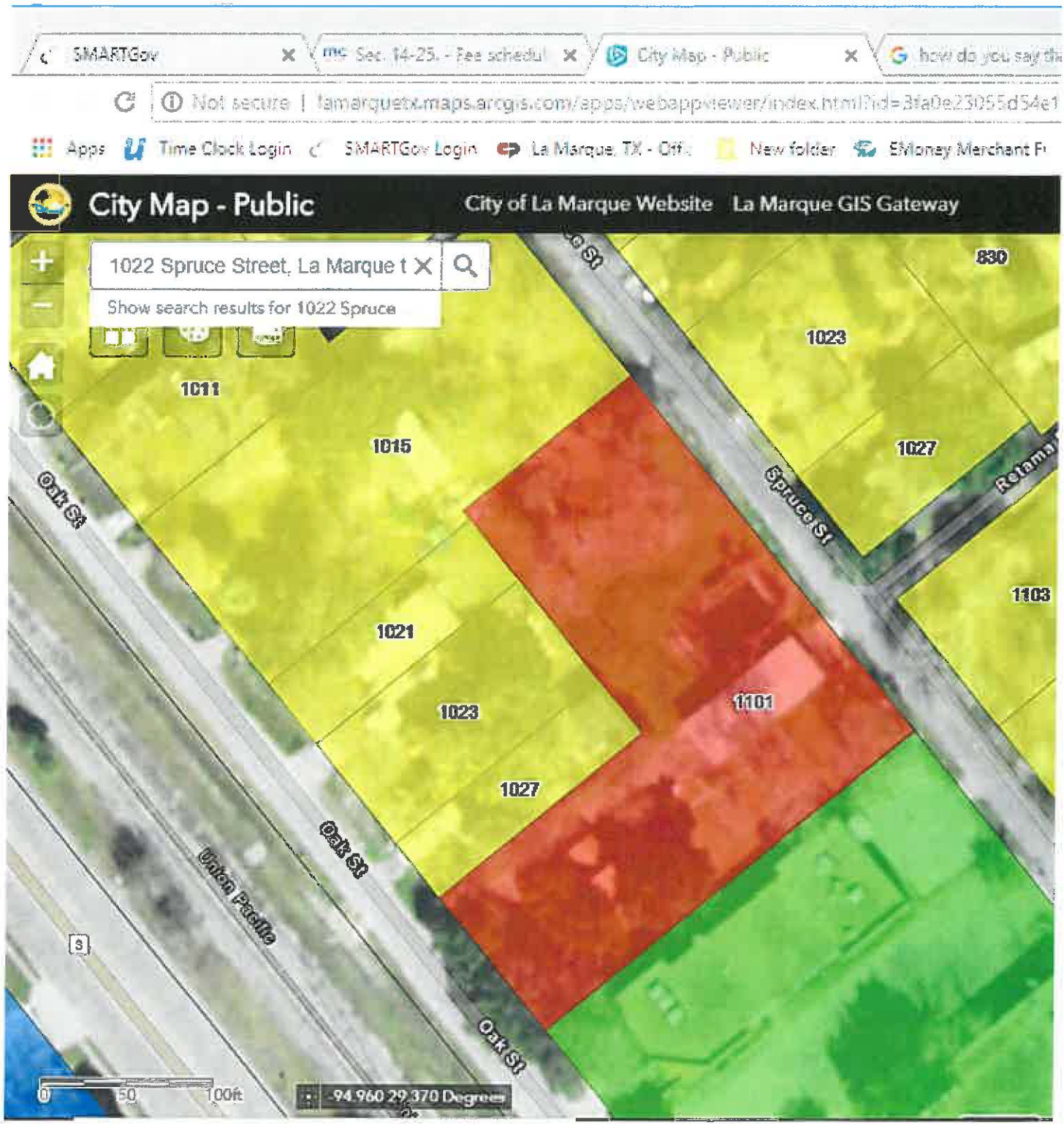

stewart title

Deborah Maduzia
Escrow Officer

Stewart Title Company
1980 Post Oak Blvd.
Houston, TX 77056
(713) 232-4380 Phone
(713) 629-2255 Fax
deborah.maduzia@stewart.com

September 06, 2018

File No.: 151670303377cpl2

To Whom It May Concern:

This company certifies that a diligent search of the Real Property Records of Stewart Title Company's abstract plant has been made, as to the herein described property, and as of 8:00 A.M. on the , the last Deed that we find, of record, reflects the record owner to be:
MICHELLE M. RUCINSKI

Legal Description:

Lots 9 thru 12 AND THE NORTH 26 FEET OF LOT 13 IN BLOCK 5 AND LTOS 12 AND 13 AND THE NORTH 20 Feet in Block 6 of McNeel's Subdivision, a Subdivision in Galveston County, Texas according to the Map or Plat as recorded in Volume 275 Page 379 and 380 of the Deed Records of Galveston County, Texas SAVE AND EXCEPT:

Lot 7A, of McNEEL'S Subdivision, RE-PLAT OF LOTS 7 AND 8 a subdivision in Galveston County, Texas, according to the map or plat thereof recorded under Clerks file number 2017060207 of the Plat records of Galveston COunty,

Subject to the following:

1. Restrictions:

Restrictive Covenants as set out in Film Code No. 2017/060207 of the Map or Plat Records of Galveston County, Texas.

2. Easements/Other Exceptions:

Subject to a 25 foot building set back line along the front Property Line per the recorded plat.

Subject to all matters as shown and/or reflected on the proposed plat.

3. Liens/Misc:

Liens in favor of The First National Bank of Bellville as set forth in instrument as recorded under clerks file number 2015064136 of the Official Public Records of Galveston County, Texas.

For information only: The vesting deed is recorded under clerks file number 2015064135 of the Official Public Records of Galveston County, Texas.

No examination has been made as to Abstracts of Judgments, State or Federal Tax Liens, the status of taxes, tax suits or paving assessments.

This letter is issued for platting purposes only. Liability of Stewart Title Company for mistakes or errors in this letter is hereby limited to the cost of said letter.

The letter is issued with the express understanding, evidenced by the acceptance thereof, that Stewart Title Company does not undertake to give or express any opinion as to the validity or effect of the instruments listed, and this letter is neither a guaranty or warranty of title.

Liability hereunder is limited to the amount paid for same. This report is furnished solely as an accommodation to the party requesting same and should not be relied upon, as a warranty or representation as to the title to the property described herein and may not be given to or used by any third party. Stewart Title Company assumes no liability whatsoever for the accuracy of this report, nor for any omission or error with respect hereto. **You agree to release, indemnify and hold harmless Stewart Title Company because of any negligence by Stewart Title Company (whether sole, joint or otherwise) for any claim, loss, liability or damages arising out of this report.** This report is not title insurance. If a policy of title insurance is purchased, any liability thereunder shall be determined solely by the terms of such policy.

Sincerely,
Stewart Title Company

LA MARQUE DEPARTMENT OF BUILDING AND INSPECTIONS
1111 Bayou Road
La Marque, Texas 77568
O. 409.938.9204
F. 409.908.0549

CITY OF LAMARQUE
PLANNING AND ZONING APPLICATION

DATE OF APPLICATION 9/6/18

NAME OF AGENT _____ PHONE _____

ADDRESS 1022 Spruce ST

NAME OF OWNER Michelle Rucinski PHONE 713-302-8488

ADDRESS _____

PROPERTY DESCRIPTION:

ADDRESS 1022 Spruce St

PLOT OF AREA ATTACHED ✓ METES AND BOUNDS ATTACHED _____

PRESENT ZONE Commercial

REASON FOR CHANGE: I purchased this property as Residential, I Was Listed and Sold as Residential.

DESIRED OUTCOME: To be Zoned as Residential so I can build a house near my daughter + Special Needs son

APPLICATION CHECKLIST

[ ] CERTIFIED PROPERTY OWNERS WITHIN 200-FEET OF THE PROPERTY-LISTS PRINTED MORE THAN TWO WEEKS PRIOR TO APPLICATION SUBMITTAL MAY NOT BE ACCEPTED

(CENTRAL APPRAISAL DISTRICT (CAD)- (CENTRAL APPRAISAL DISTRICT (CAD-
9850 Emmett Lowry Expressway Ste. A Texas City, TX 77591 409/935-1980)
409/935-1980)
[✓] **SITE PLAN (TO SCALE)** WITH EXISTING IMPROVEMENTS, DEVELOPMENTS, AND PROPERTY LINES [8-1/2X11] IF LARGER THAN 8-1/2X11, PLEASE FOLD TO APPROPRIATE SIZE)
[✓] **SURVEY** (TO SCALE) (2 COPIES)
[✓] **CURRENT TAX RECEIPTS**-COUNTY TAX OFFICE, 722 MOODY (766-2481
[✓] **TITLE REPORT** (IF LAND WAS PURCHASED WITHIN THE LAST 60 DAYS)
[✓] **NON-REFUNDABLE APPLICATION FEE** (PAYABLE TO THE CITY OF LA MARQUE

SUBMITTED TO BOARD
DATE

APPROVED DENIED OTHER

COMMENTS

APPLICANT'S CERTIFICATE

I AFFIRM THAT MY STATEMENT CONTAINED IN THE APPLICATION ARE TRUE AND CORRECT TO THE BEST OF MY KNOWLEDGE.

SIGNED DATE:

LA MARQUE DEPARTMENT OF BUILDING AND INSPECTIONS

1111 Bayou Road
La Marque, Texas 77568
O. 409.938.9204
F. 409.908.0549

CITY OF LAMARQUE
PLANNING AND ZONING APPLICATION

DATE OF APPLICATION 8/27/18

NAME OF AGENT _____ PHONE _____

ADDRESS 1101 Oak St

NAME OF OWNER Michelle Rucinski PHONE 713-302-8488

ADDRESS P.O. Box 113, Porter TX 77365

PROPERTY DESCRIPTION:

ADDRESS 1101 Oak St

PLOT OF AREA ATTACHED _____ METES AND BOUNDS ATTACHED _____

PRESENT ZONE commercial

REASON FOR CHANGE: Bought as Residential, did know it was Commercial until Building Plans were Turned in

DESIRED OUTCOME: Residential

Mickey.MMR Design LLC @ gmail.com

APPLICATION CHECKLIST

[ ] CERTIFIED PROPERTY OWNERS WITHIN 200-FEET OF THE PROPERTY-LISTS PRINTED MORE THAN TWO WEEKS PRIOR TO APPLICATION SUBMITTAL MAY NOT BE ACCEPTED

(CENTRAL APPRAISAL DISTRICT (CAD)- (CENTRAL APPRAISAL DISTRICT (CAD-
9850 Emmett Lowry Expressway Ste. A Texas City, TX 77591 409/935-1980)
409/935-1980)

[X] **SITE PLAN (TO SCALE)** WITH EXISTING IMPROVEMENTS, DEVELOPMENTS, AND PROPERTY LINES [8-1/2X11] IF LARGER THAN 8-1/2X11, PLEASE FOLD TO APPROPRIATE SIZE)

[X] **SURVEY** (TO SCALE) (2 COPIES)

[X] **CURRENT TAX RECEIPTS**-COUNTY TAX OFFICE, 722 MOODY (766-2481

[ ] **TITLE REPORT** (IF LAND WAS PURCHASED WITHIN THE LAST 60 DAYS)

[ ] **NON-REFUNDABLE APPLICATION FEE** (PAYABLE TO THE CITY OF LA MARQUE

SUBMITTED TO BOARD

DATE:

APPROVED _____ DENIED _____ OTHER _____

COMMENTS: _____

APPLICANT'S CERTIFICATE

I AFFIRM THAT MY STATEMENT CONTAINED IN THE APPLICATION ARE TRUE AND CORRECT TO THE BEST OF MY KNOWLEDGE.

SIGNED _____ DATE: _____

1111 Bayou
La Marque, Texas 77568
409-938-9202

CITY OF LA MARQUE
PLANNING AND ZONING COMMISSION
PUBLIC HEARING / REGULAR MEETING
MINUTES
OF
October 9, 2018

Public Hearing / Regular Meeting Minutes of the City of La Marque Planning and Zoning Commission held on October 9, 2018, beginning at 4 p.m. at 1109-B Bayou Road with the following members present: Greg Cornett, Hugh Cash, Jean Gutierrez and Nancy Vidotto.

(1) CALL TO ORDER

Vice-Chairperson Greg Cornett called the meeting to order at 4:01 p.m.

(2) ROLL CALL

PRESENT:

Chairperson Deanna Bethea - Absent
Vice Chairperson Greg Cornett - Present
Commissioner Hugh Cash - Present
Commissioner Jean Gutierrez - Absent
Commissioner Augustino Molis – Present
Alternate Nancy Vidotto – Present

OTHER OFFICIALS/STAFF PRESENT:

Charlene Warren – Interim City Manager
Ellis Ortego – City Attorney
Sussie Sutton – Development Coordinator

(3) INVOCATION AND PLEDGE OF ALLEGIANCE

The Pledge of Allegiance was dispensed by the Planning & Zoning Commission, led by Vice-Chairperson Greg Cornett.

(4) APPROVAL OF MINUTES

a. Meeting Minutes of August 14, 2018.
Commissioner Cash motioned to approve the minutes of August 14, 2018. Commissioner Gutierrez seconded. **MOTION PASSED UNANIMOUSLY**.

b. Impact Fee Advisory Committee Special Meeting Minutes of August 28, 2018.
Commissioner Cash motioned to approve the minutes of August 28, 2018. Commissioner Vidotto seconded. **MOTION PASSED UNANIMOUSLY.**

1111 Bayou
La Marque, Texas 77568
409-938-9202

(5) CITIZENS PARTICIPATION

None.

The Planning & Zoning Commission Meeting closed and the Public Hearing convened at 4:03 p.m.

(6) PUBLIC HEARING

a. Conduct public hearing to hear public input regarding a request to Re-Zone from C-1 Commercial to R-1 Residential: being Lots 9 thru 12 and the North 26 Feet of Lot 13 in Block 5 and Lots 12 and 13 and the North 20 Feet in Block 6 of McNeels Subdivision, a subdivision in Galveston County, Texas according to the Map or Plat as recorded in Volume 275 Page 379 and 380 of the Deed Records of Galveston County, Texas (Known as PID# 721063 Spruce Street)

Kristen Davis, 1108 Oak stated she is the owner of 1101 Oak, La Marque, TX, which is the address next door. Ms. Davis added that they purchased this L-shaped property three years ago and the property was never presented as a commercial property, neither by the agent nor title company. She doesn't understand why the property is zoned commercial as there are residential homes in the area. They want to build a home for her mother on this lot so that she can care for her son and father while her mother and husband work.

b. Conduct public hearing to hear public input regarding a request to Re-Zone from C-1 Commercial to R-1 Residential Lot 7A, of McNeels Subdivision, re-plat of Lots 7 and 8 a subdivision in Galveston County, Texas, according to the map or plat thereof recorded under Clerks file number 2017060207 of the Plat record of Galveston County. (Known as 1101 Oak Street.)

Kristen Davis, 1108 Oak, noted that she wanted to convey the same information as for Public Hearing Item a.

The Public Hearing was closed and the Planning & Zoning Commission meeting reconvened at 4:07 p.m.

(7) NEW BUSINESS

a. Discussion/possible action regarding a request to Re-Zone from C-1 Commercial to R-1 Residential: being Lots 9 thru 12 and the North 26 Feet of Lot 13 in Block 5 and Lots 12 and 13 and the North 20 Feet in Block 6 of McNeels Subdivision, a subdivision in Galveston County, Texas according to the Map or Plat as recorded in Volume 275 Page 379 and 380 of the Deed Records of Galveston County, Texas (Known as PID# 198799, 1101 Oak Street)

1111 Bayou
La Marque, Texas 77568
409-938-9202

Commissioner Gutierrez motioned to approve the Re-Zone from C-1 Commercial to R-1 Residential for Lots 9 thru 12 and the North 26 Feet of Lot 13 in Block 5 and Lots 12 and 13 and the North 20 Feet in Block 6 of McNeels Subdivision. Commissioner Vidotto seconded. **MOTION PASSED UNANIMOUSLY.**

b. Discussion/possible action regarding a request to Re-Zone Lot 7A, of McNeels Subdivision, Re-Plat of Lots 7 and 8 a subdivision in Galveston County, Texas, according to the map or plat thereof recorded under Clerks file number 2017060207 of the Plat record of Galveston County. (Known as PID# 721063, 1101 Oak Street)

Commissioner Gutierrez motioned to approve the Re-Zone from C-1 Commercial to R-1 Residential for Lots 9 thru 12 and the North 26 Feet of Lot 13 in Block 5 and Lots 12 and 13 and the North 20 Feet in Block 6 of McNeels Subdivision. Commissioner Vidotto seconded. **MOTION PASSED UNANIMOUSLY.**

c. Discussion/possible action regarding a Re-Plat of FM 1765 Business Park being a re-plat of a part of Lot 16, Highland Allotment, Volume 313, Page 408, G.C.D.R. and Blocks two and three of Super City Subdivision No. 2, (corrected), Volume 254-A, Page 60, G.C.D.R., and a portion of Volney Road abandoned by the City of La Marque Resolution No. 303, City of La Marque, Galveston County, Texas. (West of I-45 and South of FM 1765)

Commissioner Cash motioned to approve Re-Plat of FM 1765 Business Park being a re-plat of a part of Lot 16, Highland Allotment. Commissioner Vidotto seconded. **MOTION PASSED UNANIMOUSLY.**

d. Discussion/possible action regarding a Re-Plat of ESM Homes on Laurel, a subdivision of 0.3428 acres (14,934 SQ FT) in the JD Moore Survey, A-150, also being a Re-Plat of Lot 19 of the extension of the Margot Subdivision as recorded in Volume 238, Page 34 of the Deed Records of Galveston County and Volume 13, Page 34 of the Map of Records of Galveston County, City of La Marque, Galveston County, Texas. (1020 Laurel Street)

Commissioner Cash motioned to approve Re-Plat of ESM Homes on Laurel a subdivision of 0.3428 acres (14,934 SQ FT) in the JD Moore Survey, A-150, also being a Re-Plat of Lot 19 of the extension of the Margot Subdivision. Commissioner Gutierrez seconded. **MOTION PASSED UNANIMOUSLY.**

(8) CHAIRPERSON'S REPORT

There was no Chairperson's report.

1111 Bayou
La Marque, Texas 77568
409-938-9202

(9) REQUESTS AND ANNOUNCEMENTS.
There were no requests nor announcements.

(10) ADJOURNMENT
Commissioner Cash motioned to adjourn the meeting at 4:42 P.M. **MOTION PASSED UNANIMOUSLY.**

_____
Greg Cornett, Vice-Chairperson
Planning & Zoning Commission

October 9, 2018

Mayor and City Council
City of La Marque
1111 Bayou Road
La Marque, Texas 77568

Dear Mayor and City Council:

On October 8, 2018, the Planning and Zoning Commission conducted a meeting to consider a Re-Zone from a C-1 Commercial to R-1 Residential: being Lots 9 thru 12 and the North 26 Feet of Lot 13 in Block 5 and Lots 12 and 13 and the North 20 Feet in Block 6 of McNeels Subdivision, a subdivision in Galveston County, Texas according to the Map or Plat as recorded in Volume 275 Page 379 and 380 of the Deed Records of Galveston County, Texas (Known as 1101 Oak Street. PID# 198799)

By unanimous vote, Planning and Zoning Commission recommended forwarding a favorable recommendation to City Council.

Thank you,

Greg Cornett

Greg Cornett, Vice Chairperson
Planning and Zoning Commission

CITY COUNCIL AGENDA FORM

Meeting Date: November 12, 2018 Agenda item: **9e**
Prepared by: Sussie Sutton Reviewed by: *Charlene Warren*
Department: Development Services

AGENDA ITEM DESCRIPTION: Discussion/possible action regarding adopting Ordinance No. **O-2018-0016**, changing the Zoning classification from C-1 Commercial to R-1 Residential, as recommended by the Planning and Zoning Commission being Lots 9 thru 12 and the North 26 Feet of Lot 13 in Block 5 and Lots 12 and 13 and the North 20 Feet in Block 6 of McNeels Subdivision, a subdivision in Galveston County, Texas according to the Map or Plat as recorded in Volume 275 Page 379 and 380 of the Deed Records of Galveston County, Texas (Known as 1101 Oak St., PID #98799); amending the City of La Marque Zoning Map, adopted on the 12th day of December, 2005, by Ordinance Number 953. *THIS IS THE FIRST READING*

X

ATTACHMENTS FOR REFERENCE

1. Ordinance/Exhibit A
2. Site Plan
3. Zoning Map
4. City Planning Letter
5. Application
6. Planning & Zoning Draft Minutes - October 9, 2018
7. Recommendation letter from P&Z

STAFF BRIEFING:

- Ms. Michelle Rucinski purchased this entire property on October 7, 2015. The property is 1.1087 acres and includes a residential home that was constructed in 1960.
- At the time of purchase the owner was not aware that the property was non-conforming and zoned Commercial. It was her plan to have her daughter live in the home and she would construct a residence on the same lot.
- To do this, she had to replat the property so that the second residence could be constructed on its own lot.
- On June 13, 2017, the Planning & Zoning Commission considered part of this property for a replat to combine Lots 7 & 8 into Lot 7A.
- When Ms. Rucinski presented her residential construction plans she was made aware that she could not construct a home on a property that was Zoned C-1 Commercial.
- Re-zone request was brought before Planning & Zoning and is forwarded to Council with a favorable recommendation.

HISTORY:

8.28.2018 - New residential application received.
9.6.2018 - Rezone application received.
10.9.2018 - Planning & Zoning considered the rezone request

CITY COUNCIL AGENDA FORM

TARGET IMPLEMENTATION: December 10, 2018

SIGNIFICANT ACTION DATES:
10.9.2018 - Planning & Zoning Commission considered the rezone.

ACTION:

- ☒ Ordinance
- ☐ Resolution
- ☐ Special Presentation
- ☐ Proclamation
- ☐ Finance Report
- ☐ Public Hearing
- ☒ Other- Re-zone
- ☒ Mark if this item does not conflict with any Resolution, Ordinance or City Charter, policies, procedures

Cost Details:	
Budgeted	
Actual Bid	
Estimated Expenditure	
Acct. Name(s)	
Line Items #	
Other Funding	

STAFF'S RECOMMENDATION: Motion to approve a Re-Zone from C-1 Commercial to R-1 Residential, as recommended by the Planning and Zoning Commission being Lots 9 thru 12 and the North 26 Feet of Lot 13 in Block 5 and Lots 12 and 13 and the North 20 Feet in Block 6 of McNeels Subdivision, a subdivision in Galveston County, Texas according to the Map or Plat as recorded in Volume 275 Page 379 and 380 of the Deed Records of Galveston County, Texas (Known as 1101 Oak St., PID #98799); amending the City of La Marque Zoning Map, adopted on the 12th day of December, 2005, by Ordinance Number 953. *THIS IS THE FIRST READING*

FISCAL IMPACT: While this property is zoned C-1 General Commercial, it is surrounded by a residentially zoned residential housing subdivision. The likelihood that a commercial business would engage in developing a business is highly unlikely. Re-zoning the property to R-1 Single Family Residential will allow Mrs. Rucinski to permit and build a residential home, increasing the property value and therefore, the taxable value.

ORDINANCE NO. O-2018-0016

AN ORDINANCE OF THE CITY COUNCIL OF THE CITY OF LA MARQUE, TEXAS, CHANGING THE ZONING CLASSIFICATION FROM C-1 COMMERCIAL, TO R-1 SINGLE FAMILY RESIDENTIAL, FOR LOTS 9 THRU 12 AND THE NORTH 26 FEET OF LOT 13 IN BLOCK 5 AND LOTS 12 AND 13 AND THE NORTH 20 FEET IN BLOCK 6 OF MCNEELS SUBDIVISION, A SUBDIVISION IN GALVESTON COUNTY, TEXAS ACCORDING TO THE MAP OR PLAT AS RECORDED IN VOLUME 275 PAGE 379 AND 380 OF THE DEED RECORDS OF GALVESTON COUNTY, TEXAS; AMENDING THE ZONING MAP OF THE CITY ADOPTED THE 12TH DAY OF DECEMBER 2005, BY ORDINANCE NUMBER 953

WHEREAS, Michelle C. Rucinski (the "Applicant"), owner of the property at 1101 Oak Street described as Lots 9 thru 12 and the North 26 feet of Lot 13 in Block 5 and Lots 12 and 13 and the north 20 feet in Block 6 of Mc Neel's Subdivision (the "Property"), generally situated in the corporate city limits of the City of La Marque, Texas (the "City"), and being more particularly described as Tract 1 in Exhibit "A" attached hereto and made a part hereof for all purposes; and

WHEREAS, the Property presently has a zoning classification of C-1 Commercial under Chapter 71: Zoning of the Code of ordinances of the City of La Marque; and

WHEREAS, the applicant has made application to the City to change such zoning classification of said property from C-1 Commercial as authorized by the City's Zoning Ordinance; and

WHEREAS, the Property described as 1101 Oak Street described as Lots 9 thru 12 and the North 26 feet of Lot 13 in Block 5 and Lots 12 and 13 and the north 20 feet in Block 6 of Mc Neel's Subdivision, in Exhibit "A" attached hereto and made a part hereof for all purposes presently has a zoning classification of C-1 Commercial under Chapter 71: Zoning of the Code of ordinances of the City of La Marque; and

WHEREAS, City Staff has made recommendation to the City to change such zoning classification of a tract of land on 1101 Oak Street, described as Lots 9 thru 12 and the North 26 feet of Lot 13 in Block 5 and Lots 12 and 13 and the north 20 feet in Block 6 of Mc Neel's Subdivision, described in Exhibit "A" attached hereto and made a part hereof for all purposes said properties from C-1, Commercial to R-1, Single Family Residential as authorized by the City's Zoning Ordinance; and

WHEREAS, the City Council of the City has conducted, in time and manner and after the notice required by law and Chapter 71: Zone of the Code of Ordinances of the City of La Marque, a public hearing on such request in classification; and

WHEREAS, the City Council now deems it appropriate to grant such requested change in classification;

NOW THEREFORE, BE IT ORDAINED BY THE CITY COUNCIL OF THE CITY OF LA MARQUE, TEXAS THAT:

Section 1. The facts and the matters set forth in the preamble on this Ordinance are hereby found to be true and correct.

Section 2. The zoning classification of the certain tracts of land on 1101 Oak Street described as Lots 9 thru 12 and the North 26 feet of Lot 13 in Block 5 and Lots 12 and 13 and the north 20 feet in Block 6 of Mc Neel's Subdivision, as described in Exhibit "A", attached hereto and made a part hereof for all purposes, fronting the intersection of Spruce Street and Ross Street in the City of La Marque, is hereby changed from C-1, Commercial to R-1, Single Family Residential as authorized by the Chapter 71: Zoning of the Code of Ordinances of the City of La Marque.

Section 3. The zoning map of the City, adopted on the 12th day of December, 2005 by ordinance number 953, shall be revised and amended to show the zoning reclassification of said tract of land as provided in section 2 hereof, with the appropriate reference to the number and effective date of this Ordinance and brief description of the nature of the change.

Section 4. This Ordinance shall in no manner amend, change, supplement, or revise any provision of any ordinance of the City, save and except the change in zoning classification of the tract described in section 2 hereof.

Section 5. In the event any clause, phrase, provision, sentence or part of this Ordinance or the application of the same to any person or circumstances shall for any reason be adjudged invalid or held unconstitutional by a count of competent jurisdiction, it shall not affect, impair, or invalidate this Ordinance as a whole or any part or the provision hereof other than the part declared to be invalid or unconstitutional; and the City council of the City of La Marque, Texas, declares that it would have passed each and every part of the same notwithstanding the omission of any such part thus declared to be invalid or unconstitutional, whether there be one or more parts.

PASSED AND APPROVED by the City Council of the City of La Marque, Texas, on the First reading this the _____ day of_____, 2018.

PASSED, APPROVED AND ADOPTED by the City Council of the City of La Marque, Texas, on the Second and Final reading this the _____ day of _____, 2018.

CITY OF LA MARQUE, TEXAS

_____
Bobby Hocking, Mayor

ATTEST:

_____
Robin Eldridge, TRMC
City Clerk

APPROVED AS TO FORM:

_____
Ellis J. Ortego
City Attorney

EXHIBIT "A"

#6. Planning Letter

stewart title

Deborah Maduzia
Escrow Officer

Stewart Title Company
1980 Post Oak Blvd.
Houston, TX 77056
(713) 232-4380 Phone
(713) 629-2255 Fax
deborah.maduzia@stewart.com

September 06, 2018

File No.: 151670303377cpl2

To Whom It May Concern:

This company certifies that a diligent search of the Real Property Records of Stewart Title Company's abstract plant has been made, as to the herein described property, and as of 8:00 A.M. on the , the last Deed that we find, of record, reflects the record owner to be:
MICHELLE M. RUCINSKI

Legal Description:

Lots 9 thru 12 AND THE NORTH 26 FEET OF LOT 13 IN BLOCK 5 AND LTOS 12 AND 13 AND THE NORTH 20 Feet in Block 6 of McNeel's Subdivision, a Subdivision in Galveston County, Texas according to the Map or Plat as recorded in Volume 275 Page 379 and 380 of the Deed Records of Galveston County, Texas SAVE AND EXCEPT:

Lot 7A, of McNEEL'S Subdivision, RE-PLAT OF LOTS 7 AND 8 a subdivision in Galveston County, Texas, according to the map or plat thereof recorded under Clerks file number 2017060207 of the Plat records of Galveston COunty,

Subject to the following:

1. Restrictions:

Restrictive Covenants as set out in Film Code No. 2017/060207 of the Map or Plat Records of Galveston County, Texas.

2. Easements/Other Exceptions:

Subject to a 25 foot building set back line along the front Property Line per the recorded plat.

Subject to all matters as shown and/or reflected on the proposed plat.

3. Liens/Misc:

Liens in favor of The First National Bank of Bellville as set forth in instrument as recorded under clerks file number 2015064136 of the Official Public Records of Galveston County, Texas.

For information only: The vesting deed is recorded under clerks file number 2015064135 of the Official Public Records of Galveston County, Texas.

No examination has been made as to Abstracts of Judgments, State or Federal Tax Liens, the status of taxes, tax suits or paving assessments.

This letter is issued for platting purposes only. Liability of Stewart Title Company for mistakes or errors in this letter is hereby limited to the cost of said letter.

The letter is issued with the express understanding, evidenced by the acceptance thereof, that Stewart Title Company does not undertake to give or express any opinion as to the validity or effect of the instruments listed, and this letter is neither a guaranty or warranty of title.

Liability hereunder is limited to the amount paid for same. This report is furnished solely as an accommodation to the party requesting same and should not be relied upon, as a warranty or representation as to the title to the property described herein and may not be given to or used by any third party. Stewart Title Company assumes no liability whatsoever for the accuracy of this report, nor for any omission or error with respect hereto. **You agree to release, indemnify and hold harmless Stewart Title Company because of any negligence by Stewart Title Company (whether sole, joint or otherwise) for any claim, loss, liability or damages arising out of this report.** This report is not title insurance. If a policy of title insurance is purchased, any liability thereunder shall be determined solely by the terms of such policy.

Sincerely,
Stewart Title Company

#5 a. Site Plan

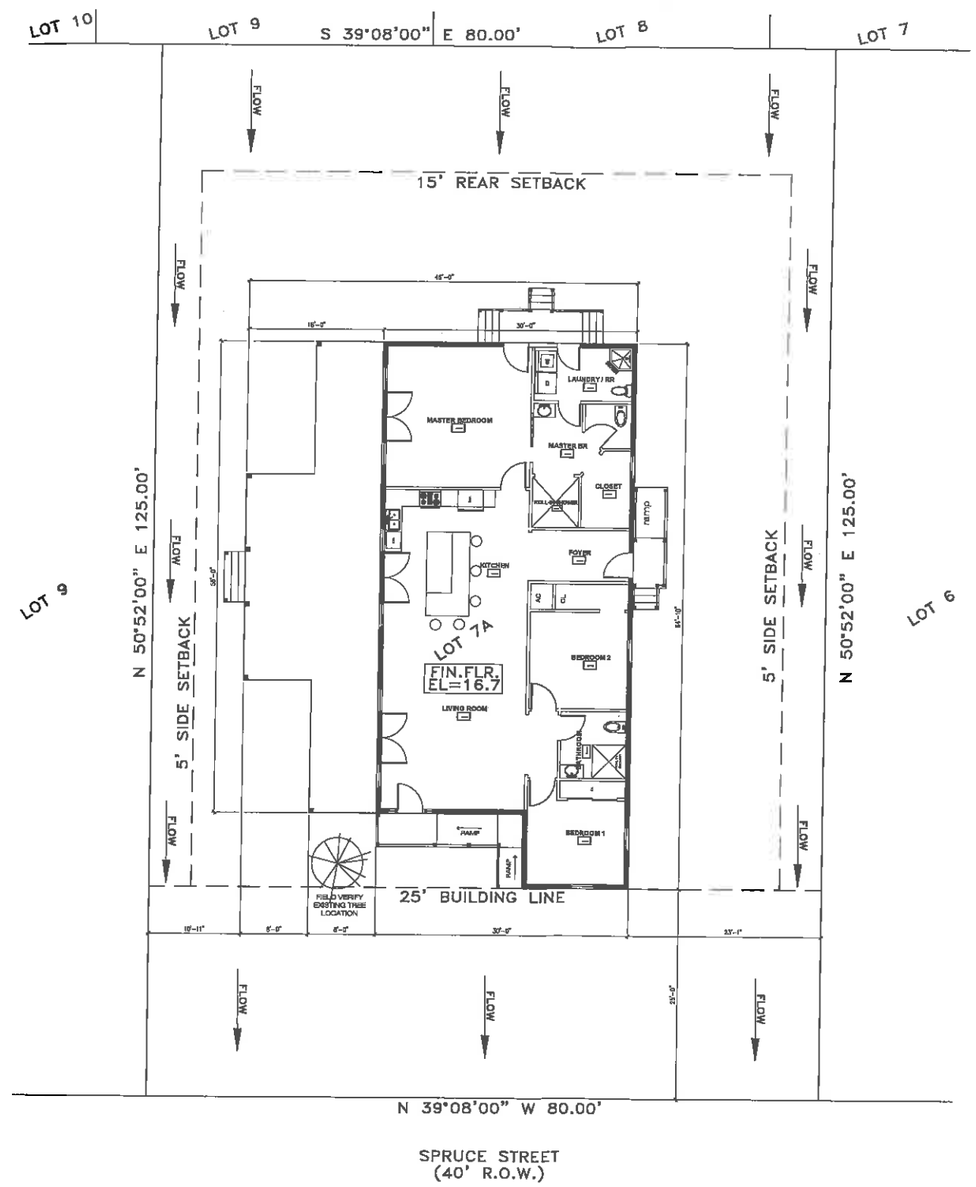

LEGEND

NOTES

Revisions:

#	DATE	DESCRIPTION OF CHANGE
0	08/08/2018	ISSUED FOR CONSTRUCTION

STATE OF TEXAS
CURTIS C. HAMPTON
107370
LICENSED
PROFESSIONAL ENGINEER

08/08/2018

COBALT
ENGINEERING & INSPECTIONS L.L.C.
12003 DELANY ROAD • LA MARQUE, TEXAS 77568 • 409-354-5925

Curtis C. Hampton P.E.
409-354-5925

CUSTOMER/OWNER NAME:
MRS. MICKEY RUCINSKI

PROJECT LOCATION OR ADDRESS:
1102 SPRUCE STREET
LA MARQUE, TEXAS 77568

SITE PLOT PLAN

NOTE: CITY OF LA MARQUE SIGNATURES VALID FOR ONE YEAR ONLY AFTER DATE OF SIGNATURE

DRAWN BY:	SWA	CHECKED BY:	CCH
PROJECT #	18-0488	SCALE:	1/32":1'-0"
DATE: 08/08/2018		SHEET:	18-0488-SP-001

Sussie Sutton

From: Sussie Sutton
Sent: Thursday, September 13, 2018 10:49 AM
To: Sussie Sutton
Subject: 1101 Oak - ReZone

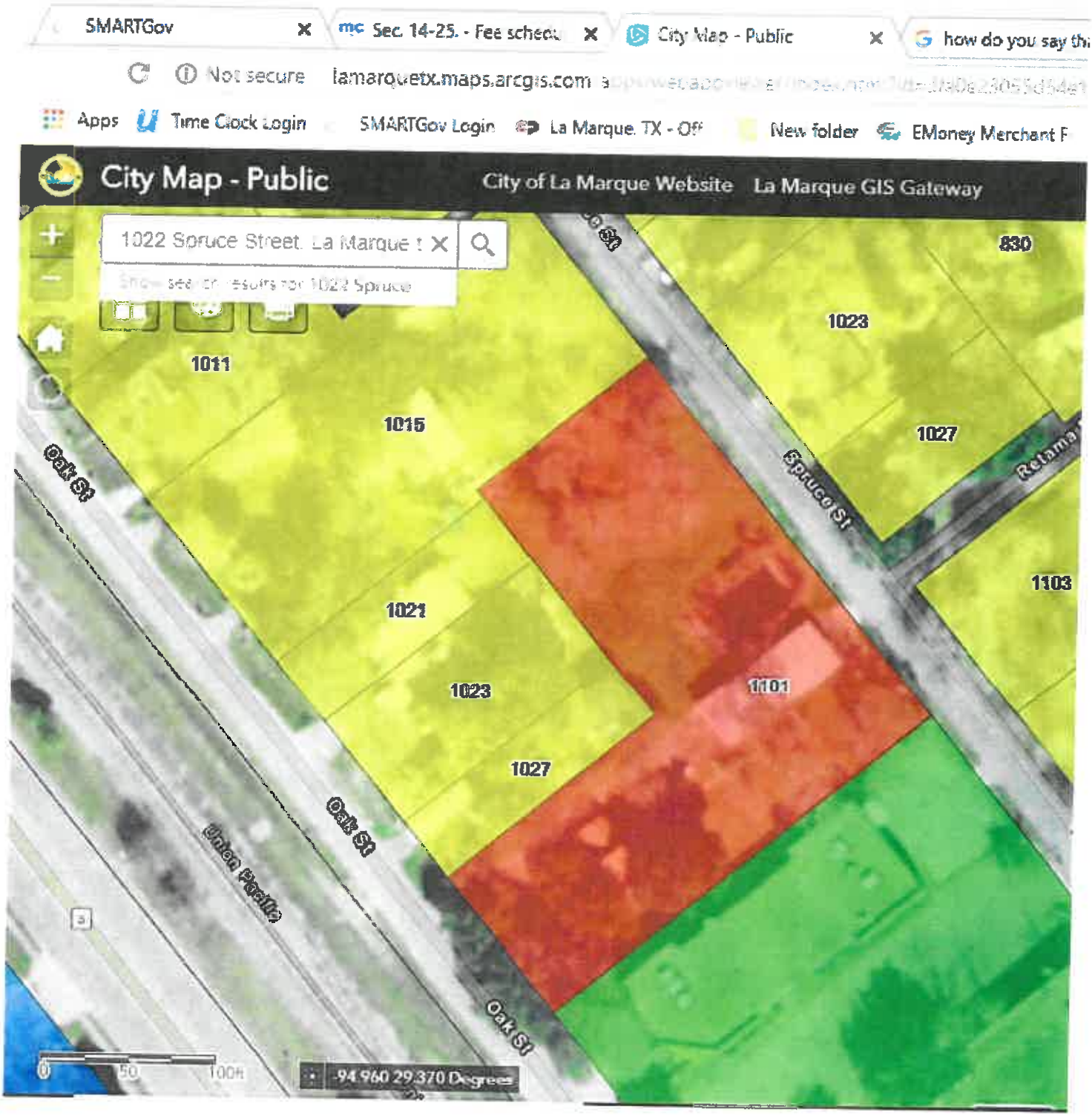

stewart title

Deborah Maduzia
Escrow Officer

Stewart Title Company
1980 Post Oak Blvd.
Houston, TX 77056
(713) 232-4380 Phone
(713) 629-2255 Fax
deborah.maduzia@stewart.com

September 06, 2018

File No.: 151670303377cpl2

To Whom It May Concern:

This company certifies that a diligent search of the Real Property Records of Stewart Title Company's abstract plant has been made, as to the herein described property, and as of 8:00 A.M. on the , the last Deed that we find, of record, reflects the record owner to be:
MICHELLE M. RUCINSKI

Legal Description:

Lots 9 thru 12 AND THE NORTH 26 FEET OF LOT 13 IN BLOCK 5 AND LTOS 12 AND 13 AND THE NORTH 20 Feet in Block 6 of McNeel's Subdivision, a Subdivision in Galveston County, Texas according to the Map or Plat as recorded in Volume 275 Page 379 and 380 of the Deed Records of Galveston County, Texas SAVE AND EXCEPT:

Lot 7A, of McNEEL'S Subdivision, RE-PLAT OF LOTS 7 AND 8 a subdivision in Galveston County, Texas, according to the map or plat thereof recorded under Clerks file number 2017060207 of the Plat records of Galveston COunty,

Subject to the following:

1. Restrictions:

Restrictive Covenants as set out in Film Code No. 2017/060207 of the Map or Plat Records of Galveston County, Texas.

2. Easements/Other Exceptions:

Subject to a 25 foot building set back line along the front Property Line per the recorded plat.

Subject to all matters as shown and/or reflected on the proposed plat.

3. Liens/Misc:

Liens in favor of The First National Bank of Bellville as set forth in instrument as recorded under clerks file number 2015064136 of the Official Public Records of Galveston County, Texas.

For information only: The vesting deed is recorded under clerks file number 2015064135 of the Official Public Records of Galveston County, Texas.

No examination has been made as to Abstracts of Judgments, State or Federal Tax Liens, the status of taxes, tax suits or paving assessments.

This letter is issued for platting purposes only. Liability of Stewart Title Company for mistakes or errors in this letter is hereby limited to the cost of said letter.

The letter is issued with the express understanding, evidenced by the acceptance thereof, that Stewart Title Company does not undertake to give or express any opinion as to the validity or effect of the instruments listed, and this letter is neither a guaranty or warranty of title.

Liability hereunder is limited to the amount paid for same. This report is furnished solely as an accommodation to the party requesting same and should not be relied upon, as a warranty or representation as to the title to the property described herein and may not be given to or used by any third party. Stewart Title Company assumes no liability whatsoever for the accuracy of this report, nor for any omission or error with respect hereto. **You agree to release, indemnify and hold harmless Stewart Title Company because of any negligence by Stewart Title Company (whether sole, joint or otherwise) for any claim, loss, liability or damages arising out of this report.** This report is not title insurance. If a policy of title insurance is purchased, any liability thereunder shall be determined solely by the terms of such policy.

Sincerely,
Stewart Title Company

LA MARQUE DEPARTMENT OF BUILDING AND INSPECTIONS

1111 Bayou Road
La Marque, Texas 77568
O. 409.938.9204
F. 409.908.0549

CITY OF LAMARQUE
PLANNING AND ZONING APPLICATION

DATE OF APPLICATION 8/27/18

NAME OF AGENT _____ PHONE _____

ADDRESS 1101 Oak St

NAME OF OWNER Michelle Rucinski PHONE 713-302-8488

ADDRESS P.O. Box 113, Porter TX 77365

PROPERTY DESCRIPTION:

ADDRESS: 1101 Oak St

PLOT OF AREA ATTACHED _____ METES AND BOUNDS ATTACHED _____

PRESENT ZONE commercial

REASON FOR CHANGE: Bought as Residential, did know it was Commercial until Building Plans were Turned in

DESIRED OUTCOME: Residential

Mickey.MMR Design LLC @ gmail.com

APPLICATION CHECKLIST

[ ] CERTIFIED PROPERTY OWNERS WITHIN 200-FEET OF THE PROPERTY-LISTS PRINTED MORE THAN TWO WEEKS PRIOR TO APPLICATION SUBMITTAL MAY NOT BE ACCEPTED

(CENTRAL APPRAISAL DISTRICT (CAD)- (CENTRAL APPRAISAL DISTRICT (CAD-
9850 Emmett Lowry Expressway Ste. A Texas City, TX 77591 409/935-1980)
409/935-1980)
[X] **SITE PLAN (TO SCALE)** WITH EXISTING IMPROVEMENTS, DEVELOPMENTS, AND PROPERTY LINES [8-1/2X11] IF LARGER THAN 8-1/2X11, PLEASE FOLD TO APPROPRIATE SIZE)
[X] **SURVEY** (TO SCALE) (2 COPIES)
[X] **CURRENT TAX RECEIPTS**-COUNTY TAX OFFICE, 722 MOODY (766-2481
[ ] **TITLE REPORT** (IF LAND WAS PURCHASED WITHIN THE LAST 60 DAYS)
[ ] **NON-REFUNDABLE APPLICATION FEE** (PAYABLE TO THE CITY OF LA MARQUE

SUBMITTED TO BOARD
DATE: _____

APPROVED _____ DENIED _____ OTHER _____

COMMENTS _____

APPLICANT'S CERTIFICATE

I AFFIRM THAT MY STATEMENT CONTAINED IN THE APPLICATION ARE TRUE AND CORRECT TO THE BEST OF MY KNOWLEDGE.

_____
SIGNED DATE:

1111 Bayou
La Marque, Texas 77568
409-938-9202

CITY OF LA MARQUE
PLANNING AND ZONING COMMISSION
PUBLIC HEARING / REGULAR MEETING
MINUTES
OF
October 9, 2018

Public Hearing / Regular Meeting Minutes of the City of La Marque Planning and Zoning Commission held on October 9, 2018, beginning at 4 p.m. at 1109-B Bayou Road with the following members present: Greg Cornett, Hugh Cash, Jean Gutierrez and Nancy Vidotto.

(1) CALL TO ORDER

Vice-Chairperson Greg Cornett called the meeting to order at 4:01 p.m.

(2) ROLL CALL

PRESENT:

Chairperson Deanna Bethea - Absent
Vice Chairperson Greg Cornett - Present
Commissioner Hugh Cash - Present
Commissioner Jean Gutierrez - Absent
Commissioner Augustino Molis – Present
Alternate Nancy Vidotto – Present

OTHER OFFICIALS/STAFF PRESENT:

Charlene Warren – Interim City Manager
Ellis Ortego – City Attorney
Sussie Sutton – Development Coordinator

(3) INVOCATION AND PLEDGE OF ALLEGIANCE

The Pledge of Allegiance was dispensed by the Planning & Zoning Commission, led by Vice-Chairperson Greg Cornett.

(4) APPROVAL OF MINUTES

a. Meeting Minutes of August 14, 2018.
Commissioner Cash motioned to approve the minutes of August 14, 2018. Commissioner Gutierrez seconded. **MOTION PASSED UNANIMOUSLY**.

b. Impact Fee Advisory Committee Special Meeting Minutes of August 28, 2018.
Commissioner Cash motioned to approve the minutes of August 28, 2018. Commissioner Vidotto seconded. **MOTION PASSED UNANIMOUSLY.**

1111 Bayou
La Marque, Texas 77568
409-938-9202

(5) CITIZENS PARTICIPATION

None.

The Planning & Zoning Commission Meeting closed and the Public Hearing convened at 4:03 p.m.

(6) PUBLIC HEARING

a. Conduct public hearing to hear public input regarding a request to Re-Zone from C-1 Commercial to R-1 Residential: being Lots 9 thru 12 and the North 26 Feet of Lot 13 in Block 5 and Lots 12 and 13 and the North 20 Feet in Block 6 of McNeels Subdivision, a subdivision in Galveston County, Texas according to the Map or Plat as recorded in Volume 275 Page 379 and 380 of the Deed Records of Galveston County, Texas (Known as PID# 721063 Spruce Street)

Kristen Davis, 1108 Oak stated she is the owner of 1101 Oak, La Marque, TX, which is the address next door. Ms. Davis added that they purchased this L-shaped property three years ago and the property was never presented as a commercial property, neither by the agent nor title company. She doesn't understand why the property is zoned commercial as there are residential homes in the area. They want to build a home for her mother on this lot so that she can care for her son and father while her mother and husband work.

b. Conduct public hearing to hear public input regarding a request to Re-Zone from C-1 Commercial to R-1 Residential Lot 7A, of McNeels Subdivision, re-plat of Lots 7 and 8 a subdivision in Galveston County, Texas, according to the map or plat thereof recorded under Clerks file number 2017060207 of the Plat record of Galveston County. (Known as 1101 Oak Street.)

Kristen Davis, 1108 Oak, noted that she wanted to convey the same information as for Public Hearing Item a.

The Public Hearing was closed and the Planning & Zoning Commission meeting reconvened at 4:07 p.m.

(7) NEW BUSINESS

a. Discussion/possible action regarding a request to Re-Zone from C-1 Commercial to R-1 Residential: being Lots 9 thru 12 and the North 26 Feet of Lot 13 in Block 5 and Lots 12 and 13 and the North 20 Feet in Block 6 of McNeels Subdivision, a subdivision in Galveston County, Texas according to the Map or Plat as recorded in Volume 275 Page 379 and 380 of the Deed Records of Galveston County, Texas (Known as PID# 198799, 1101 Oak Street)

1111 Bayou
La Marque, Texas 77568
409-938-9202

Commissioner Gutierrez motioned to approve the Re-Zone from C-1 Commercial to R-1 Residential for Lots 9 thru 12 and the North 26 Feet of Lot 13 in Block 5 and Lots 12 and 13 and the North 20 Feet in Block 6 of McNeels Subdivision. Commissioner Vidotto seconded. **MOTION PASSED UNANIMOUSLY.**

b. Discussion/possible action regarding a request to Re-Zone Lot 7A, of McNeels Subdivision, Re-Plat of Lots 7 and 8 a subdivision in Galveston County, Texas, according to the map or plat thereof recorded under Clerks file number 2017060207 of the Plat record of Galveston County. (Known as PID# 721063, 1101 Oak Street)

Commissioner Gutierrez motioned to approve the Re-Zone from C-1 Commercial to R-1 Residential for Lots 9 thru 12 and the North 26 Feet of Lot 13 in Block 5 and Lots 12 and 13 and the North 20 Feet in Block 6 of McNeels Subdivision. Commissioner Vidotto seconded. **MOTION PASSED UNANIMOUSLY.**

c. Discussion/possible action regarding a Re-Plat of FM 1765 Business Park being a re-plat of a part of Lot 16, Highland Allotment, Volume 313, Page 408, G.C.D.R. and Blocks two and three of Super City Subdivision No. 2, (corrected), Volume 254-A, Page 60, G.C.D.R., and a portion of Volney Road abandoned by the City of La Marque Resolution No. 303, City of La Marque, Galveston County, Texas. (West of I-45 and South of FM 1765)

Commissioner Cash motioned to approve Re-Plat of FM 1765 Business Park being a re-plat of a part of Lot 16, Highland Allotment. Commissioner Vidotto seconded. **MOTION PASSED UNANIMOUSLY.**

d. Discussion/possible action regarding a Re-Plat of ESM Homes on Laurel, a subdivision of 0.3428 acres (14,934 SQ FT) in the JD Moore Survey, A-150, also being a Re-Plat of Lot 19 of the extension of the Margot Subdivision as recorded in Volume 238, Page 34 of the Deed Records of Galveston County and Volume 13, Page 34 of the Map of Records of Galveston County, City of La Marque, Galveston County, Texas. (1020 Laurel Street)

Commissioner Cash motioned to approve Re-Plat of ESM Homes on Laurel a subdivision of 0.3428 acres (14,934 SQ FT) in the JD Moore Survey, A-150, also being a Re-Plat of Lot 19 of the extension of the Margot Subdivision. Commissioner Gutierrez seconded. **MOTION PASSED UNANIMOUSLY.**

(8) CHAIRPERSON'S REPORT

There was no Chairperson's report.

1111 Bayou
La Marque, Texas 77568
409-938-9202

(9) REQUESTS AND ANNOUNCEMENTS.
There were no requests nor announcements.

(10) ADJOURNMENT
Commissioner Cash motioned to adjourn the meeting at 4:42 P.M. **MOTION PASSED UNANIMOUSLY.**

_____
Greg Cornett, Vice-Chairperson
Planning & Zoning Commission

October 9, 2018

Mayor and City Council
City of La Marque
1111 Bayou Road
La Marque, Texas 77568

Dear Mayor and City Council:

On October 8, 2018, the Planning and Zoning Commission conducted a meeting to consider a Re-Zone from C-1 Commercial to R-1 Residential: Lot 7A, of McNeels Subdivision, Re-Plat of Lots 7 and 8 a subdivision in Galveston County, Texas, according to the map or plat thereof recorded under Clerks file number 2017060207 of the Plat record of Galveston County. (Known as 1101 Oak Street PID# 721063.)

By unanimous vote, Planning and Zoning Commission recommended forwarding a favorable recommendation to City Council.

Thank you,

Greg Cornett

Greg Cornett, Vice Chairperson
Planning and Zoning Commission

CITY COUNCIL AGENDA FORM

Meeting Date: November 12, 2018 Agenda item: **9f**
Prepared by: Charlene Warren Reviewed by: *Charlene Warren*
Department: Administration

AGENDA ITEM DESCRIPTION: Discussion/possible action regarding adopting Ordinance No. **O-2018-0017**, waiving registration fees for the rental registration program until December 31, 2018 and approval of an updated brocure and registration forms for the rental registration program. *THIS IS THE FIRST READING*

X

ATTACHMENTS FOR REFERENCE

1. Ordinance
2. Revised Rental Registration flyer
3. Rental Registration form

STAFF BRIEFING:

- At the June 11, 2018 Council meeting, Council adopted Ordinance No. O-2018-005, adding to Chapter 14, Buildings and Building Regulations, a new Article XI, entitled "Registration of Residential Rental Units Required," providing rules and regulations governing same within the City.
- In a subsequent discussion with Mayor Pro-Tem Bell, various City staff, and special legal counsel, it was suggested to waive registration fees for those landlords who complete registration prior to December 31, 2018, as a means to encourage compliance with the new ordinance.
- An ordinance is required to waive these fees.
- Special legal counsel has reviewed and approved this ordinance.
- City Attorney has been included on emails.
- The revised rental registration flyer and registration form are attached for consideration and approval.

TARGET IMPLEMENTATION: December 10, 2018

SIGNIFICANT ACTION DATES:
5.14.2018 – First Reading of Ordinance O-2018-005
6.11.2018 – Second and Final Reading of Ordinance O-2018-005
11.12.2018 – First Reading of Ordinance O-2018-0017

Cost Details:	
Budgeted	
Actual Bid	
Estimated Expenditure	
Acct. Name(s)	

Rev. 09/24/2014

CITY COUNCIL AGENDA FORM

Line Items #	
Other Funding	

ACTION:

☒ Ordinance ☐ Resolution

☐ Special Presentation ☐ Proclamation

☐ Finance Report ☐ Public Hearing

☐ Other

☒ Mark if this item does not conflict with any Resolution, Ordinance or City Charter, policies, procedures

---

STAFF'S RECOMMENDATION: Motion to adopt Ordinance No. **O-2018-0017**, waiving registration fees for the rental registration program until December 31, 2018 and approval of an updated brocure and registration forms for the rental registration program. *THIS IS THE FIRST READING*

FISCAL IMPACT: **N/A**

ORDINANCE NO. O-2018-0017

AN ORDINANCE AMENDING THE CODE OF ORDINANCES OF THE CITY OF LA MARQUE, TEXAS, AMENDING CHAPTER 14, BUILDINGS AND BUILDING REGULATIONS, ARTICLE XI, ENTITLED "REGISTRATION OF RESIDENTIAL RENTAL UNITS REQUIRED", SECTION 14-425, "REGISTRATION FEES," BY WAIVING THE REGISTRATION FEE FOR OWNERS OF RENTAL UNITS REGISTERED PRIOR TO DECEMBER 31, 2018.

NOW, THEREFORE, BE IT ORDAINED BY THE CITY COUNCIL OF THE CITY OF LA MARQUE, TEXAS:

Section 1. That Section 14-425, "Registration Fees," Article XI, "Registration of Residential Rental Units Required," Chapter 14, "Buildings and Building Regulations," of the Code of Ordinances, City of La Marque, Texas, is hereby amended as follows:

"Sec. 14-425. Registration Fees.

(1) Each registration shall include a registration fee of $100.00 for the first rental unit and $20.00 per additional rental unit. The registration fee shall be waived for the owner of any rental unit that completes registration prior to December 31, 2018.

(2) A registration is valid for one year from the date the completed registration form is filed in the office of the code enforcement officer, and payment of the registration fee for that year has been made, unless the ownership of the rental unit changes.

(3) A registration is not assignable or transferable. If a change of ownership of the rental unit occurs during the period that a registration is otherwise valid, the new owner of the property shall have 30 days from the date the change of ownership occurred to file a new registration with the code enforcement officer, and pay a new registration fee."

Section 2. In the event any clause, phrase, provision, sentence, or part of this Ordinance or the application of the same to any person or circumstance shall for any reason be adjudged invalid or held unconstitutional by a court of competent jurisdiction, it shall not affect, impair, or invalidate this Ordinance as a whole or any

part or provision hereof other than the part declared to be invalid or unconstitutional; and the City Council of the City of La Marque, Texas, declares that it would have passed each and every part of the same notwithstanding the omission of any such part thus declared to be invalid or unconstitutional, whether there be one or more parts.

Section 3. This ordinance is intended to be cumulative and shall not repeal any previous ordinance except to the extent that any provision of such ordinance is inconsistent and cannot be reconciled with any provision contained herein.

Section 4. This ordinance shall be effective immediately upon the Second and Final reading and adoption by the City Council of La Marque.

PASSED AND APPROVED on First reading this the ____ day of _____, 2018.

PASSED, APPROVED AND ADOPTED on the Second and Final reading this the ____ day of _____, 2018.

_____
Bobby Hocking
Mayor

ATTEST:

_____
Robin Eldridge, TRMC
City Clerk

APPROVED AS TO FORM:

_____
Ellis J. Ortego
City Attorney

LA MARQUE
Rental Registration

The City of La Marque Code Compliance Division will be implementing this new program and has created a guide to help tenants, landlords and the community understand the new ordinance.

The purpose of La Marque's Rental Registration Program is to provide tenants of rental properties in La Marque with a direct point of contact to submit complaints about substandard rental units, and to provide the Code Compliance Division with contact information for landlords in order to maintain open communication with the City to more quickly address complaints and code violations prior to the issuance of citations. The goal is to maintain attractive, safe and healthy homes for residents and visitors in our city. Through education and enforcement, Code Compliance Division staff will begin the process of registering every rental property in La Marque. Registration will be required annually.

By working together, we can keep La Marque a wonderful place to live and raise a family. For information, visit code.cityoflamarque.org or pick up a brochure at City Hall, 1111 Bayou Road.

Thank you,
LA MARQUE CODE COMPLIANCE

REACH OUT

City of La Marque
Code Compliance Division
1111 Bayou Road
La Marque, Texas 77568

409-938-9202

code.cityoflamarque.org

City of La Marque

RENTAL REGISTRATION PROGRAM

Code Compliance promotes and maintains a safe and desirable living and working environment for La Marque residents and business owners. We encourage all landlords and tenants to educate themselves on the Rental Registration Program and current city codes.

RENTAL REGISTRATION Q&A

WHO HAS ACCESS TO RENTAL REGISTRATION INFORMATION?

The database is maintained by City staff and is considered public record. See Texas Government Code Sec. 552.1175.

HOW IS THE PROGRAM ENFORCED?

Beginning in late 2018, the Code Compliance Division began to educate tenants and landlords about the new Rental Registration Program requirements in an effort to get each required property registered. While the Code Compliance Division can issue citations for failure to register, our goal is to work with landlords to get rental units registered and compliant with all City codes. The Code Compliance Division intends to issue citations only after several written warnings have been issued. However, failure to register a rental property is a violation susceptible to citation and owners can be issued citations for each day they do not register.

WHO SHOULD REGISTER?

Rental property owners are responsible for registering. Out-of-town owners must designate a local person responsible for the property. The local contact can not be listed on the lease and must reside close to La Marque in case an emergency arises.

ARE ALL RENTAL UNITS REQUIRED TO REGISTER?

Yes. Any unit that is not owner-occupied should be registered, except rental units that are occupied rent-free by a family member of the owner. This includes a single family home, duplex, apartment, rented, let, leased or hired out as a dwelling unit. This does not include a unit in a jail, licensed nursing home, hotel or motel.

CAN I APPEAL A CITATION?

Yes, you are entitled to due process, including an administrative hearing and the right to judicial appeal.

WHAT WILL BE INSPECTED AFTER THE PROPERTY IS REGISTERED?

Inspections are not required as part of the rental registration program. However, the Code Enforcement Division will inspect properties in response to a complaint. All property must comply with minimum standards for health and safety, regardless of when they were built or whether they are owner occupied, tenant occupied, or vacant. See Chapter 54, Texas Local Government Code. The minimum health and safety standards adopted by the City are contained in the 2012 International Property Maintenance Code.

HOW DO I REGISTER?

Property owners may pick up a Rental Registration Form at La Marque City Hall or request a registration form by emailing code@cityoflamarque.org. Information is available online at visiting code.cityoflamarque.org > Rental Registration Program.

LA MARQUE
Adopted Codes

- 2012 International Property Maintenance Code
- 2012 International Residential Code
- 2012 International Plumbing Code
- 2012 International Building Code
- 2014 National Electric Code
- 2012 International Fire Code

FOR ADDITIONAL RESOURCES, VISIT CODE.CITYOFLAMARQUE.ORG

ANNUAL FEE SCHEDULE

Register by December 31, 2018
NO FEE for 2019

Register after December 31, 2018
$100.00 per property address
$20 for each additional unit

Examples:

One rent house:	$100
Apartment with 20 units:	$480
Five rent houses:	$180

Registration Fee: $100.00
Each Add'l Unit: $20.00

CITY OF LA MARQUE
MULTI-FAMILY/ RESIDENTIAL
RENTAL REGISTRATION APPLICATION

	Please check if there has been a change in occupancy or tenants since the last registration date.
	Please check if this property is owner occupied but has individual rooms rented.
	Please check if this property is Section 8 or approved for Galveston County housing assistance.

Rental Unit Address			
Primary Tenant Name			
Tenant's Phone			
Move-in Date		Number of Occupants	

Please complete the appropriate information below:

INDIVIDUAL OWNER SECTION

Owner's Name:			
Owner's Address			
Owner's Email			
Owner's Phone		Work #	

CORPORATE OWNER SECTION

Partnership/Company Name	
Please list the name, business address and phone number of each partner or company	

CORPORATION

Corporation Name					
Is this a Foreign Corporation?		YES		NO	Place of Incorporation
Incorporated under The State of Texas Laws?		YES		NO	
Mailing Address					
Business Location					
Local Agent/Person in Charge					
Email Address				Phone Number	
List the Names of all Officers/Directors/Trustees					

PROPERTY MANAGEMENT COMPANY/LOCAL EMERGENCY CONTACT

Name			
Address			
Email			
Phone Number		After Hours Phone Number	

Signature of Owner/Agent Date:

Mail To:	FEES PAID: $_____
City of La Marque - Code Compliance Division	DATE PAID:_____
1111 Bayou Road	
La Marque, Texas 77568	

CITY COUNCIL AGENDA FORM

Meeting Date:	November 12, 2018	Agenda item:	**9g**
Prepared by:	Robin Eldridge	Reviewed by:	*Charlene Warren*
Department:	Mayor & City Council		

AGENDA ITEM DESCRIPTION: Discussion/possible action regarding a proposed Ordinance establishing procedures and criteria for appointing members to the Boards and Commissions and provide direction to City Attorney

[X]

ATTACHMENTS FOR REFERENCE

1. Proposed Ordinance

STAFF BRIEFING:

- Resolution No. 1032 was adopted in 2006, to help Council establish criteria for appointing members to Boards and Commissions
- Each individual Board and Commission has an ordinance that created each particular Board/Commission
- City Attorney has drawn up a draft Ordinance for consideration

HISTORY:

- Historically, appointments were made in accordance with Resolution No. 1032.
- Discussions led to the drafting of an ordinance that would establish more clearly defined guidelines

TARGET IMPLEMENTATION: As soon as a final Ordinance is adopted, and according the City Charter

SIGNIFICANT ACTION DATES:

6.4.2018 - Proposed changes to the appointment process were briefly discussed at the Council Retreat

9.10.2018 – City Attorney was asked to draw up an ordinance with the Council's input from the Workshop

ACTION

☒ Ordinance ☐ Resolution

☐ Special Presentation ☐ Proclamation

☐ Finance Report ☐ Public Hearing

☐ Other-

☐ Mark if this item does not conflict with any Resolution, Ordinance or City Charter, policies, procedures

Cost Details:	
Budgeted	N/A
Actual Bid	N/A
Estimated Expenditure	N/A
Acct. Name(s)	N/A
Line Item#	N/A
Other Funding	N/A

STAFF'S RECOMMENDATION: Depending on Council's decision

FISCAL IMPACT: NA

ORDINANCE NO. _____

AN ORDINANCE OF THE CITY COUNCIL OF THE CITY OF LA MARQUE, TEXAS, AMENDING ARTICLE I, GENERAL, OF THE CODE OF ORDINANCES, CITY OF LA MARQUE, TEXAS, BY ADDING A NEW SECTION 2.9 TO ESTABLISH PROCEDURES FOR THE APPOINTMENT OF MEMBERS TO VARIOUS STANDING BOARDS, COMMISSIONS, AND COMMITTEES OF THE CITY OF LA MARQUE.

WHEREAS, the City Council of the City of La Marque has determined that an established procedure for the appointment of volunteers to the City's various standing Boards, Commission and Committees is necessary; and

WHEREAS, the City Council wishes to establish a system for the appointment of volunteers which will provide equal opportunity for each council member to nominate representatives to the various standing Boards, Commissions and Committees; and

WHEREAS, the City Council believes such a system will lend harmony to the appointment process and enhance the opportunity for citizens of the community to serve.

NOW, THEREFORE, BE IT ORDAINED BY THE CITY COUNCIL OF THE CITY OF LA MARQUE, TEXAS:

That Article I, General, of the Code of Ordinances, City of La Marque, Texas, is hereby amended by adding a new section, to be numbered Sec. 2-9, entitled Establishing a Policy for Appointments to Boards Commissions and Committees, which section shall read as follows:

"Sec. 2-9. Establishing a Policy for Appointments to Boards, Commissions and Committees.

(a) Standing Boards, Commissions and Committees addressed by this policy shall be referred to as "Committees", in the interest of brevity. Those Committees addressed by this policy are:

Building Standards Commission (See Sec. 14.280)
Keep La Marque Beautiful Commission (See Sec. 35-45)
La Marque Economic Development Commission
Library Advisory Board (See Sec. 2.37)
Civil Service Commission (See Sec. 2.306)
La Marque Cemetery Board (See Sec. 2.312)
Parks Board (See Sec. 209)
Planning and Zoning Board (See Sec. 71.24)
Board of Adjustments (See Sec. 71.25)

(b) Initial Assignments of Positions and Changes.

(1) Each member position on each of the itemized Committees are hereby assigned to a Council District or the Mayor as indicated on "Attachment A" which is attached hereto and made a part hereof by reference. The "City Council" as used herein shall also include the position of Mayor.

(2) The City Council may amend the District assignments at any time by simple motion and approval at any called City Council Meeting where the subject is posted as a part of the Agenda according to law. District assignments and future changes to those assignments shall be maintained by and kept in the Office of the City Clerk.

(c) Nominations and Appointments

(1) Notice: Sixty days prior to the expiration of an appointed term, or immediately after being notified of a mid-term vacancy on any Committee, the City Clerk shall notify the Council Member, whose District is assigned the position in question, that a vacancy will be or is open on that Committee. Included with that notice will be any candidates for nomination that the Committee itself may have

recommended, any qualifications for the position that may be established by Charter or Ordinance, and the Meeting schedule of the relevant Committee. A copy of the Notice shall be provided to all members of the City Council at the same time.

(2) Nominations: A Council Member shall have thirty days from receiving the City Clerk's notice of a vacancy or pending vacancy for a position assigned to that Council Member to provide the name of a nominee to the City Clerk to be presented to the full City Council for consideration of appointment at the next regular scheduled City Council Meeting following the thirty days. The nominating Council Member shall provide, along with the name, or nominees. If the Council Member assigned to a vacant Committee position, or a position scheduled to be vacant because of an expiring term of appointment, fails to provide the City Clerk the name and required information within the thirty days following the date of the notice or, in the case of expiring terms, thirty days prior to the term expires, nominations from any Council Member may be submitted for consideration before or during the meeting which appointments are to be considered.

(3) Appointments: The City Clerk shall place consideration of appointments to fill vacancies or pending vacancies for the relevant Committees on the next regular City Council Meeting Agenda, following the thirty days of notice to Council Members. Appointments are made with a majority vote of Council attending a meeting.

(4) Committee Chair Responsibilities: It shall be the responsibility of the Chair Person of each Committee to guide the Committee to enforce any attendance

requirements for maintaining Committee membership, to notify the City Clerk of Any mid-term vacancies and to provide the City Clerk a record of attendance of the Committee Members.

(d) Residency Requirement.

All newly appointed Committee Members must be a resident of the City of La Marque at the time of appointment. Current non-resident members may serve out their term.

(e) Term Limits.

All newly appointed Committee Members, except a member of the Economic Development Board, may serve only three consecutive two-year terms. Newly appointed Economic Development Board members re limited to two consecutive six-year terms. Current members may serve out their terms.

(f) Absences.

Any Committee Member cannot miss three consecutive meetings without stating a reason in advance of the meeting. The Committee Members present must approve the reason for it to be legitimate. Three unexcused consecutive absences shall automatically remove the member. Four unexcused absences within a twelve-month period shall cause automatic removal of the Member.

(g) Committee Membership Limits.

A person can serve on only one Committee at a time but may also serve as an alternate Member of another Committee."

DRAFT

PASSED AND APPROVED on first reading this ____ day of _____, 2018.

PASSED, APPROVED AND ADOPTED on second and final reading this the _____ day of

_____, 2018.

_____

Bobby Hocking, Mayor
City of La Marque, Texas

ATTEST:

_____
Robin Eldridge, City Clerk

APPROVED AS TO FORM:

_____
Ellis J. Ortego, City Attorney

ao;11/6/18;Z:\Cities\La Marque\ordboardscommittees.doc

DRAFT

CITY COUNCIL AGENDA FORM

Meeting Date: November 12, 2018 | Agenda item: **10a**
Prepared by: Suzy Kou | Reviewed by: *Charlene Warren*
Department: Finance

AGENDA ITEM DESCRIPTION: Discussion/possible action regarding approval of agreement with Belt Harris Pechacek, LLLP for two years (fiscal years 2018 and 2019) with option to renew one additional year to perform City's annual financial audits and Single Audits in the amount of $46,950

X

ATTACHMENTS FOR REFERENCE

1. Proposed engagement letter

STAFF BRIEFING:

- Per State law, City is required to be audited annually by an independent auditing firm.
- Belt Harris Pechacek, LLLP is also the auditing firm for LM EDC financials.
- Proposed fees for fiscal years 2018, 2019, and possible 2020 are lower than fees charged for previous years. Proposed fees: 2018-$46,950; 2019-$48,240; 2020-$49,565; Prior years fees: $49,750.

HISTORY:

- Since 2012 Belt Harris Pechacek, LLLP has been assisting the City with annual audit.

TARGET IMPLEMENTATION: November 12, 2018

SIGNIFICANT ACTION DATES:

ACTION:

☐ Ordinance ☐ Resolution
☐ Special Presentation ☐ Proclamation
☐ Finance Report ☐ Public Hearing
☒ Other - Agreement
☒ Mark if this item does not conflict with any Resolution, Ordinance or City Charter, policies, procedures

Cost Details:	
Budgeted	47,745
Actual Bid	46,950
Estimated Expenditure	**46,950**
Acct. Name(s)	Audit Services
Line Items #	01-4040-02-00
Other Funding	

STAFF'S RECOMMENDATION: Motion to approve agreement with Belt Harris Pechacek, LLLP for two years (fiscal years 2018 and 2019) with option to renew one

additional year to perform City's annual financial audits and Single Audits in the amount of $46,950

FISCAL IMPACT: Contracted annual cost of $46,950

Engagement Letter - Single Audit

October 25, 2018

The Honorable Bobby Hocking, Mayor
City of La Marque
1111 Bayou Road
La Marque, Texas 77568-4160

We are pleased to confirm our understanding of the services we are to provide for the City of La Marque, Texas (the "City") for the years ended September 30, 2018 and 2019, with the option to renew for one additional subsequent fiscal year.

Audit Services

We will audit the financial statements of the governmental activities, the business-type activities, the discretely presented component unit, each major fund, and the aggregate remaining fund information, including the related notes to the financial statements, which collectively comprise the basic financial statements of the City as of and for the years ended September 30, 2018 and 2019, with the option to renew for one additional subsequent fiscal year.

The component units will be audited as part of the audit of the financial statements of the City as noted below:

1. La Marque Public Improvement District No. 1: Blended, No Separate Financial Statements
2. La Marque Economic Development Corporation: Discretely Presented, Separate Financial Statements

Limited Procedures

Accounting standards generally accepted in the United States of America provide for certain Required Supplementary Information (RSI), such as Management's Discussion and Analysis (MD&A), to supplement the City's basic financial statements. Such information, although not a part of the basic financial statements, is required by the Governmental Accounting Standards Board who considers it to be an essential part of financial reporting for placing the basic financial statements in an appropriate operational, economic, or historical context. As part of our engagement, we will apply certain limited procedures to the City's RSI in accordance with auditing standards generally accepted in the United States of America. These limited procedures will consist of inquiries of management regarding the methods of preparing the information and comparing the information for consistency with management's responses to our inquiries, the basic financial statements, and other knowledge we obtained during our audit of the basic financial statements. We will not express an opinion or provide any assurance on the information because the limited procedures do not provide us with sufficient evidence to express an opinion or provide any assurance. The following RSI is required by U.S. generally accepted accounting principles and will be subjected to certain limited procedures, but will not be audited:

1. Management's Discussion and Analysis
2. Budgetary Comparison Schedule(s)
3. Net Pension Liability and Contribution Schedule(s)
4. OPEB Schedule(s)

Houston
3210 Bingle Rd., Ste. 300
Houston, TX 77055
713.263.1123

Bellville
P.O. Box 826
Bellville, TX 77418
713.263.1123

Austin
100 Congress Ave., Ste. 2000
Austin, TX 78701
512.381.0222

All Offices
www.texasauditors.com
info@ txauditors.com
713.263.1550 fax

Governmental Audit Quality Center
AICPA

In Relation Opinion

We have also been engaged to report on supplementary information other than RSI that accompanies the City's financial statements. We will subject the following supplementary information to the auditing procedures applied in our audit of the financial statements and certain additional procedures, including comparing and reconciling such information directly to the underlying accounting and other records used to prepare the financial statements or to the financial statements themselves, and other additional procedures in accordance with auditing standards generally accepted in the United States of America, and we will provide an opinion on it in relation to the financial statements as a whole in a report combined with our auditors' report on the financial statements:

1. Schedule of Expenditures of Federal Awards
2. Combining Statement(s) and Schedule(s)

Unaudited Information

The following other information accompanying the financial statements will not be subjected to the auditing procedures applied in our audit of the financial statements, and our auditors' report will not provide an opinion or any assurance on that other information:

1. Introductory Section

In connection with the engagement, we will perform services unrelated to our attest function. The additional services we will provide include:

1. **Preparation of Documents**
   We will assist in preparing the financial statements and related notes of the City in conformity with U.S. generally accepted accounting principles based on information provided by the City.
2. **Advisory Services**
   We will provide routine advisory services through phone calls, conferences, or otherwise, in connection with incidental matters arising during the year. We encourage open lines of communication throughout the year as part of our services.
3. **Correspondence**
   We will handle all normal correspondence from grantor, regulatory, or oversight agencies related to the audit.
4. **Professional Proofing**
   To ensure documents issued in connection with the audit engagement are professional in appearance, we will submit both client-prepared information, as well as documents created entirely by the auditor, to an independent professional proofreader for a cover-to-cover inspection. This review will include consistent formatting, grammar, logic, and any other items that may detract from the document. This process is over and above technical reviews performed.
5. **Printing and Binding**
   All final hard copy documents will be printed on a 1200 dpi or better resolution copier and bright white report paper. Reports will be bound with GBC-brand plastic combs with 30 mil oversized covers. We will manually inspect each page from one document and spot check remaining reports for printing errors. Our reports will be centered, properly aligned, and free of smudges and other detracting elements.
6. **Electronic Adobe Searchable PDF**
   In addition to providing hard copy documents, we will also provide all final documents in electronic image files in Adobe PDF format, suitable for posting in electronic agenda packages, posting on websites, or transmitting by email to regulatory agencies.
7. **Client Portal - Auditbox**
   We will provide the City access to our proprietary AuditBox online site to provide a central repository where both the City's personnel and audit team members can see documents being exchanged during the process to eliminate duplicate requests from audit team members. Both the City's documents, as well as final audit documents, will be hosted on the site providing an archive of information that new personnel may access in subsequent years, if information is needed regarding what was provided for a prior year

audit or a copy of audit documents issued.

Other Services

We will also assist in preparing the financial statements, schedule of expenditures of federal awards, and related notes of the City in conformity with U.S. generally accepted accounting principles and the Uniform Guidance based on information provided by you. These nonaudit services do not constitute an audit under *Government Auditing Standards* and such services will not be conducted in accordance with *Government Auditing Standards*. We will perform the services in accordance with applicable professional standards. The other services are limited to the financial statements, schedule of expenditures of federal awards, and related notes services previously defined. We, in our sole professional judgment, reserve the right to refuse to perform any procedure or take any action that could be construed as assuming management responsibilities.

Management Responsibilities

Management is responsible for (1) designing, implementing, and maintaining effective internal controls relevant to the preparation and fair presentation of financial statements that are free from material misstatement, whether due to fraud or error, including internal controls over federal awards, and for evaluating and monitoring ongoing activities to help ensure that appropriate goals and objectives are met; (2) following laws and regulations; (3) ensuring that there is reasonable assurance that government programs are administered in compliance with compliance requirements; and (4) ensuring that management is reliable and financial information is reliable and properly reported. Management is also responsible for implementing systems designed to achieve compliance with applicable laws, regulations, contracts, and grant agreements. You are also responsible for the selection and application of accounting principles; for the preparation and fair presentation of the financial statements, schedule of expenditures of federal awards, and all accompanying information in conformity with U.S. generally accepted accounting principles; and for compliance with applicable laws and regulations (including federal statutes) and the provisions of contracts and grant agreements (including award agreements). Your responsibilities also include identifying significant contractor relationships in which the contractor has responsibility for program compliance and for the accuracy and completeness of that information.

Management is also responsible for making all financial records and related information available to us and for the accuracy and completeness of that information. You are also responsible for providing us with (1) access to all information of which we are aware that is relevant to the preparation and fair presentation of the financial statements, (2) access to personnel, accounts, books, records, supporting documentation, and other information as needed to perform an audit under the Uniform Guidance, (3) additional information that we may request for the purpose of the audit, and (4) unrestricted access to persons within the government from whom we determine it necessary to obtain audit evidence.

Your responsibilities include adjusting the financial statements to correct material misstatements and confirming to us in the management representation letter that the effects of any uncorrected misstatements aggregated by us during the current engagement and pertaining to the latest period presented are immaterial, both individually and in the aggregate, to the financial statements as a whole.

You are responsible for the design and implementation of programs and controls to prevent and detect fraud, and for informing us about all known or suspected fraud affecting the government involving (1) management, (2) employees who have significant roles in internal control, and (3) others where the fraud could have a material effect on the financial statements. Your responsibilities include informing us of your knowledge of any allegations of fraud or suspected fraud affecting the government received in communications from employees, former employees, grantors, regulators, or others. In addition, you are responsible for identifying and ensuring that the government complies with applicable laws, regulations, contracts, agreements, and grants. Management is also responsible for taking timely and appropriate steps to remedy fraud and noncompliance with provisions of laws, regulations, contract, and grant agreements, or abuse that we report. Additionally, as required by the Uniform Guidance, it is management's responsibility to evaluate and monitor noncompliance with federal statutes, regulations, and the terms and conditions of federal awards; take prompt action when instances of noncompliance are identified including noncompliance identified in audit findings; promptly follow up and take corrective action on reported audit findings; and prepare a summary schedule of prior audit findings and a separate corrective action plan. The summary schedule of prior audit findings should be available for our review prior to the beginning of our audit fieldwork.

You are responsible for identifying all federal awards received and understanding and complying with the compliance requirements and for the preparation of the schedule of expenditures of federal awards (including notes and noncash assistance received) in conformity with the Uniform Guidance. You agree to include our report on the schedule of expenditures of federal awards in any document that contains and indicates that we have reported on the schedule of expenditures of federal awards. You also agree to make the audited financial statements readily available to intended users of the schedule of expenditures of federal awards no later than the date the schedule of expenditures of federal awards is issued with our report thereon. Your responsibilities include acknowledging to us in the written representation letter that (1) you are responsible for presentation of the schedule of expenditures of federal awards in accordance with the Uniform Guidance; (2) you believe the schedule of expenditures of federal awards, including its form and content, is stated fairly in accordance with the Uniform Guidance; (3) the methods of measurement or presentation have not changed from those used in the prior period (or, if they have changed, the reasons for such changes); and (4) you have disclosed to us any significant assumptions or interpretations underlying the measurement or presentation of the schedule of expenditures of federal awards.

You are also responsible for the preparation of the other supplementary information, on which we have been engaged to report, in conformity with U.S. generally accepted accounting principles. You agree to include our report on the supplementary information in any document that contains, and indicates that we have reported on, the supplementary information. You also agree to include the audited financial statements with any presentation of the supplementary information that includes our report thereon. Your responsibilities include acknowledging to us in the representation letter that (1) you are responsible for presentation of the supplementary information in accordance with GAAP; (2) you believe the supplementary information, including its form and content, is fairly presented in accordance with GAAP; (3) the methods of measurement or presentation have not changed from those used in the prior period (or, if they have changed, the reasons for such changes); and (4) you have disclosed to us any significant assumptions or interpretations underlying the measurement or presentation of the supplementary information.

Management is responsible for establishing and maintaining a process for tracking the status of audit findings and recommendations. Management is also responsible for identifying and providing report copies of previous financial audits, attestation engagements, performance audits, or other studies related to the objectives discussed in the Audit Objectives section of this letter. This responsibility includes relaying to us corrective actions taken to address significant findings and recommendations resulting from those audits, attestation engagements, performance audits, or studies. You are also responsible for providing management's views on our current findings, conclusions, and recommendations, as well as your planned corrective actions, for the report, and for the timing and format for providing that information.

You agree to assume all management responsibilities relating to the financial statements, schedule of expenditures of federal awards, related notes, and any other nonaudit services we provide. You will be required to acknowledge in the management representation letter our assistance with the preparation of the financial statements, schedule of expenditures of federal awards, and related notes and that you have reviewed and approved the financial statements, schedule of expenditures of federal awards, and related notes prior to their issuance and have accepted responsibility for them. Further, you agree to oversee the nonaudit services by designating an individual, preferably from senior management, with suitable skill, knowledge, or experience; evaluate the adequacy and results of those services; and accept responsibility for them.

Audit Objectives

The objective of our audit is the expression of opinions as to whether your financial statements are fairly presented, in all material respects, in conformity with U.S. generally accepted accounting principles and to report on the fairness of the supplementary information referred to in the second paragraph when considered in relation to the financial statements as a whole. The objective also includes reporting on---

1. Internal control over financial reporting and compliance with the provisions of laws, regulations, contracts, and award agreements, noncompliance with which could have a material effect on the financial statements in accordance with *Government Auditing Standards*.

2. Internal control over compliance related to major programs and an opinion (or disclaimer of opinion) on compliance with federal statutes, regulations, and the terms and conditions of federal awards that could have a direct and material effect on each major program in accordance with the Single Audit Act Amendments of 1996 and Title 2 U.S. *Code of Federal Regulations* (CFR) Part 200, *Uniform Administrative Requirements, Cost Principles, and Audit Requirements for Federal Awards* (Uniform Guidance).

The *Government Auditing Standards* report on internal control over financial reporting and on compliance and other matters will include a paragraph that states that (1) the purpose of the report is solely to describe the scope of testing of internal control and compliance and the results of that testing, and not to provide an opinion on the effectiveness of the entity's internal control or on compliance, and (2) the report is an integral part of an audit performed in accordance with *Government Auditing Standards* in considering the entity's internal control and compliance. The Uniform Guidance report on internal control over compliance will include a paragraph that states that the purpose of the report on internal control over compliance is solely to describe the scope of testing of internal control over compliance and the results of that testing based on the requirements of the Uniform Guidance. Both reports will state that the report is not suitable for any other purpose.

Our audit will be conducted in accordance with auditing standards generally accepted in the United States of America; the standards for financial audits contained in *Government Auditing Standards*, issued by the Comptroller General of the United States; the Single Audit Act Amendments of 1996; and the provisions of the Uniform Guidance, and will include tests of accounting records, a determination of major program(s) in accordance with the Uniform Guidance, and other procedures we consider necessary to enable us to express such an opinion. We will issue written reports upon completion of our Single Audit. Our reports will be addressed to management and members of the governing body of the City. We cannot provide assurance that an unmodified opinion will be expressed. Circumstances may arise in which it is necessary for us to modify our opinion or add an emphasis-of-matter or other-matter paragraph. If our opinions are other than unmodified, we will discuss the reasons with you in advance. If, for any reason, we are unable to complete the audit or are unable to form or have not formed an opinion, we may decline to express opinions or issue reports, or may withdraw from this engagement.

Audit Procedures-General

An audit includes examining, on a test basis, evidence supporting the amounts and disclosures in the financial statements; therefore, our audit will involve judgment about the number of transactions to be examined and the areas to be tested. An audit also includes evaluating the appropriateness of accounting policies used and the reasonableness of significant accounting estimates made by management, as well as evaluating the overall presentation of the financial statements. We will plan and perform the audit to obtain reasonable assurance about whether the financial statements are free of material misstatement, whether from (1) errors, (2) fraudulent financial reporting, (3) misappropriation of assets, or (4) violations of laws or governmental regulations that are attributable to the government or to acts by management or employees acting on behalf of the government. Because the determination of abuse is subjective, *Government Auditing Standards* do not expect auditors to provide reasonable assurance of detecting abuse.

Because of the inherent limitations of an audit, combined with the inherent limitations of internal control, and because we will not perform a detailed examination of all transactions, there is a risk that material misstatements or noncompliance may exist and not be detected by us, even though the audit is properly planned and performed in accordance with U.S. generally accepted auditing standards and *Government Auditing Standards*. In addition, an audit is not designed to detect immaterial misstatements or violations of laws or governmental regulations that do not have a direct and material effect on the financial statements or major programs. However, we will inform the appropriate level of management of any material errors, any fraudulent financial reporting, or misappropriation of assets that come to our attention. We will also inform the appropriate level of management of any violations of laws or governmental regulations that come to our attention, unless clearly inconsequential, and of any material abuse that comes to our attention. We will include such matters in the reports required for a Single Audit. Our responsibility as auditors is limited to the period covered by our audit and does not extend to any later periods for which we are not engaged as auditors.

Our procedures will include tests of documentary evidence supporting the transactions recorded in the accounts, and may include tests of the physical existence of inventories, and direct confirmation of receivables and certain other assets and liabilities by correspondence with selected individuals, funding sources, creditors, and financial

institutions. We will request written representations from your attorneys as part of the engagement, and they may bill you for responding to this inquiry. At the conclusion of our audit, we will also require certain written representations from you about your responsibilities for the financial statements; schedule of expenditures of federal awards; federal award programs; compliance with laws, regulations, contracts and grant agreements; and other responsibilities required by generally accepted auditing standards.

Audit Procedures-Internal Control

Our audit will include obtaining an understanding of the government and its environment, including internal control, sufficient to assess the risks of material misstatement of the financial statements and to design the nature, timing, and extent of further audit procedures. Tests of controls may be performed to test the effectiveness of certain controls that we consider relevant to preventing and detecting errors and fraud that are material to the financial statements and to preventing and detecting misstatements resulting from illegal acts and other noncompliance matters that have a direct and material effect on the financial statements. Our tests, if performed, will be less in scope than would be necessary to render an opinion on internal control and, accordingly, no opinion will be expressed in our report on internal control issued pursuant to *Government Auditing Standards*.

As required by the Uniform Guidance, we will perform tests of controls over compliance to evaluate the effectiveness of the design and operation of controls that we consider relevant to preventing or detecting material noncompliance with compliance requirements applicable to each major federal award program. However, our tests will be less in scope than would be necessary to render an opinion on those controls and, accordingly, no opinion will be expressed in our report on internal control issued pursuant to the Uniform Guidance.

An audit is not designed to provide assurance on internal control or to identify significant deficiencies or material weaknesses. Accordingly, we will express no such opinion. However, during the audit, we will communicate to management and those charged with governance internal control related matters that are required to be communicated under AICPA professional standards, *Government Auditing Standards*, and the Uniform Guidance.

Audit Procedures-Compliance

As part of obtaining reasonable assurance about whether the financial statements are free of material misstatement, we will perform tests of the City's compliance with provisions of applicable laws, regulations, contracts, and agreements, including grant agreements. However, the objective of those procedures will not be to provide an opinion on overall compliance, and we will not express such an opinion in our report on compliance issued pursuant to *Government Auditing Standards*.

The Uniform Guidance requires that we also plan and perform the audit to obtain reasonable assurance about whether the auditee has complied with federal statutes, regulations, and the terms and conditions of federal awards applicable to major programs. Our procedures will consist of tests of transactions and other applicable procedures described in the *OMB Compliance Supplement* for the types of compliance requirements that could have a direct and material effect on each of the City's major programs. The purpose of these procedures will be to express an opinion on the City's compliance with requirements applicable to each of its major programs in our report on compliance issued pursuant to the Uniform Guidance.

Engagement Administration, Fees, and Other

We understand that your employees will prepare all cash, accounts receivable, or other confirmations we request and will locate any documents selected by us for testing.

At the conclusion of the engagement, we will complete the appropriate sections of the Data Collection Form that summarizes our audit findings. It is management's responsibility to electronically submit the reporting package (including financial statements, schedule of expenditures of federal awards, summary schedule of prior audit findings, auditors' reports, and corrective action plan) along with the Data Collection Form to the Federal Audit Clearinghouse. We will coordinate with you the electronic submission and certification. The Data Collection Form and the reporting package must be submitted within the earlier of 30 calendar days after receipt of the auditors' reports or nine months after the end of the audit period.

We will provide copies of our reports to the City; however, management is responsible for distribution of the reports and the financial statements. Unless restricted by law or regulation, or containing privileged and

confidential information, copies of our reports are to be made available for public inspection.

The audit documentation for this engagement is the property of Belt Harris Pechacek, LLLP and constitutes confidential information. However, subject to applicable laws and regulations, audit documentation and appropriate individuals will be made available upon request and in a timely manner to any oversight agency or its designee, a federal agency providing direct or indirect funding, or the U.S. Government Accountability Office for purposes of a quality review of the audit, to resolve audit findings, or to carry out oversight responsibilities. We will notify you of any such request. If requested, access to such audit documentation will be provided under the supervision of Belt Harris Pechacek, LLLP personnel. Furthermore, upon request, we may provide copies of selected audit documentation to the aforementioned parties. These parties may intend, or decide, to distribute the copies or information contained therein to others, including other governmental agencies.

The audit documentation for this engagement will be retained for a minimum of five years after the report release date or for any additional period requested by the oversight agency. If we are aware that a federal awarding agency, pass-through entity, or auditee is contesting an audit finding, we will contact the party(ies) contesting the audit finding for guidance prior to destroying the audit documentation.

Fees for our services are based on the actual time spent at our standard hourly rates, plus travel and other out-of-pocket costs such as report production, typing, postage, etc. Our standard hourly rates vary according to the degree of responsibility involved and the experience level of the personnel assigned to your audit. The time estimates used to project our fees are based on anticipated cooperation from your personnel and management fulfilling its responsibility, as discussed previously. Our time budget for this engagement does not include addressing matters related to management's responsibilities, such as modifications to the City's financial information, additional procedures related to alleged noncompliance with laws and regulations and similar improprieties, the City's lack of preparation for the audit, and similar matters. Such time requirements have not been included in the estimate and will be billed in addition to the fees quoted at our standard hourly rates and actual costs incurred, including legal consultations, if necessary. We will notify the appropriate party when such conditions are encountered, such as identifying schedules not prepared, out-of-balance accounts, alleged violations, etc. When possible, we will provide management with options for alleviating the condition. If it appears the item(s) will not be addressed by the City, we may perform procedures to address incidental matters to facilitate timely completion of the audit. To the extent possible, we will obtain approval before performing additional work for matters considered significant to the original proposed fee. Due to the nature of our work, such approval may not always be possible (i.e., we may be legally compelled by subpoena or similar request to expend additional time and incur other expenses to handle matters arising from this engagement).

As customary in the industry, the price quoted is an estimate. In accordance with rules of the State Board of Public Accountancy, we cannot be bound to provide the audit for the amount estimated. However, in practice, we honor our fee quotes unless adverse conditions such as those described above are encountered.

Fee Estimates

	2018	2019	2020 (Option)
Financial Statement Audit	$ 46,950	$ 48,240	$ 49,565
<u>Additional Fees (If Required)*</u>			
Single Audit- Basic Procedures	$ 2,000	$ 2,000	$ 2,000
Single Audit- Each Major Program(non-FEMA)	$ 4,000	$ 4,000	$ 4,000
Single Audit- Major Program (FEMA)	$ 6,000	$ 6,000	$ 6,000

* A single audit is required when federal funds over $750,000 are expended. Our fees are based on the number of major programs (programs over $750,000).

Our invoices for these fees will be rendered each month as work progresses and are payable on presentation. Generally, 40 percent will be billed and payable upon completion of interim audit procedures (normally one to four months before year end) and 60 percent after a draft of the financial statements is issued. Accordingly, the fee will be split 40/60 between budget years. In accordance with our firm policies, work may be suspended if your account becomes 30 days or more overdue and may not be resumed until your account is paid in full. If we elect to

terminate our services for nonpayment, our engagement will be deemed to have been completed upon written notification of termination, even if we have not completed our report. You will be obligated to compensate us for all time expended and to reimburse us for all out-of-pocket costs through the date of termination. The above fee is based on anticipated cooperation from your personnel and the assumption that unexpected circumstances will not be encountered during the audit.

Government Auditing Standards require that we provide you with a copy of our most recent external peer review report and any letter of comment, and any subsequent peer review reports and letters of comment received during the period of the contract. Our 2015 peer review accompanies this letter.

Foreign Terrorists Organizations

Pursuant to Chapter 2252, Texas Government Code, we represent and certify that, at the time of execution of this letter, neither we nor any wholly owned subsidiary, majority-owned subsidiary, parent company, or affiliate of the same (i) engages in business with Iran, Sudan, or any foreign terrorist organization as described in Chapters 806 or 807 of the Texas Government Code or Subchapter F of Chapter 2252 of the Texas Government Code or (ii) is a company listed by the Texas Comptroller of Public Accounts under Sections 806.051, 807.051, or 2252.153 of the Texas Government Code. The term 'foreign terrorist organization' in this paragraph has the meaning assigned to such term in Section 2252.151 of the Texas Government Code.

Required Non-Appropriation Clause

Notwithstanding anything contained in this engagement to the contrary, in the event no funds or insufficient funds are appropriated and budgeted or are otherwise unavailable in any fiscal period for fees due under this engagement agreement, the City will immediately notify us in writing of such occurrence and this agreement shall terminate on the last day of the fiscal period for which appropriations have been received or made.

Authorization of CPA's Disclosure

Any client certified public accountant involved with assisting us shall not be prohibited from disclosure of information required to be made available by the standards of the public accounting profession in reporting on the examination of financial statements. Management understands and provides permission to staff certificate or registration holders as required under the Rules of Professional Conduct, Texas Administrative Code, Title 22, Part 22, Chapter 501, Subchapter C, Section 501.75.

We appreciate the opportunity to be of service to the City and believe this letter accurately summarizes the significant terms of our engagement. If you have any questions, please let us know. If you agree with the terms of our engagement as described in this letter, please sign the enclosed copy and return it to us.

Sincerely,

Belt Harris Pechacek, LLLP
Certified Public Accountants

Authorized by:

Michael Brotherton, CPA
Partner

RESPONSE:

This letter correctly sets forth the understanding of City of La Marque, Texas.

_____
The Honorable Bobby Hocking, Mayor

_____
Date

BUMGARDNERMORRISON

CPAs • Tax • Audit & Accounting

System Review Report

To the Partners of Belt Harris Pechacek, LLLP
and the Peer Review Committee of the
Texas Society of Certified Public Accountants

We have reviewed the system of quality control for the accounting and auditing practice of Belt Harris Pechacek, LLLP (the firm) in effect for the year ended June 30, 2015. Our peer review was conducted in accordance with the Standards for Performing and Reporting on Peer Reviews established by the Peer Review Board of the American Institute of Certified Public Accountants. As a part of our peer review, we considered reviews by regulatory entities, if applicable, in determining the nature and extent of our procedures. The firm is responsible for designing a system of quality control and complying with it to provide the firm with reasonable assurance of performing and reporting in conformity with applicable professional standards in all material respects. Our responsibility is to express an opinion on the design of the system of quality control and the firm's compliance therewith based on our review. The nature, objectives, scope, limitations of, and the procedures performed in a System Review are described in the standards at www.aicpa.org/prsummary.

As required by the standards, engagements selected for review included engagements performed under the *Government Auditing Standards*.

In our opinion, the system of quality control for the accounting and auditing practice of Belt Harris Pechacek, LLLP in effect for the year ended June 30, 2015, has been suitably designed and complied with to provide the firm with reasonable assurance of performing and reporting in conformity with applicable professional standards in all material respects. Firms can receive a rating of *pass*, *pass with deficiency* (*ies*) or *fail*. Belt Harris Pechacek, LLLP has received a peer review rating of *pass*.

Bumgardner, Morrison + Company, LLP

BUMGARDNER, MORRISON & COMPANY, LLP
October 22, 2015

Bumgardner, Morrison & Company, LLP
Certified Public Accountants

1501 E Mockingbird Lane, Suite 300
PO Box 3750
Victoria, Texas 77903-3750
Phone: 361.575.0271
Fax: 361.578.0880
Website: BMCcpa.com

Members: American Institute of Certified Public Accountants
Texas Society of Certified Public Accountants
AICPA Private Companies Practice Section
AICPA Employee Benefit Plan Audit Quality Center
AICPA Government Audit Quality Center

CITY COUNCIL AGENDA FORM

Meeting Date: November 12, 2018 Agenda item: **10b**
Prepared by: Amanda Hobby Reviewed by: *Charlene Warren*
Department: Public Services

AGENDA ITEM DESCRIPTION - Discussion/possible action regarding approval of agreement between Eriberto (Eddie) Benevides and the City of La Marque for use and maintenance of the baseball fields in Mahan Park, as recommended by the Parks Board

X

ATTACHMENTS FOR REFERENCE

1. Agreement
2. Parks Board Meeting Minutes - September 20, 2018

STAFF BRIEFING:

- Eriberto (Eddie) Benevides would like to continue use of baseball fields at Mahan Park.
- Mr. Benevides will continue to maintain the fields and provide materials for the league.
- Parks Board met on September 20, 2018 and voted unanimously to enter into an agreement with Mr. Benevides.
- Mr. Benevides has had a contract with the City since May 2016; however, a lapse in insurance voided the contract.
- At the time this agenda form was prepared, Mr. Benevides had not provided current insurance documentation.

HISTORY:

5.2.2016 – Special Parks Board meeting approved the agreement between Eriberto Benevides and the City of La Marque

8.2017 – Insurance lapsed which voided Mr. Benevides' contract with the City.

TARGET IMPLEMENTATION: November 13, 2018

SIGNIFICANT ACTION DATES:

9.20.2018 – Parks Board recommended to City Council approval of an agreement for the use of the baseball fields in Mahan Park

CITY COUNCIL AGENDA FORM

ACTION:

- ☐ Ordinance
- ☐ Resolution
- ☐ Special Presentation
- ☐ Proclamation
- ☐ Finance Report
- ☐ Public Hearing
- ☒ Other- Agreement
- ☒ Mark if this item does not conflict with any Resolution, Ordinance or City Charter, policies, procedures

Cost Details:	
Budgeted	
Actual Bid	
Estimated Expenditure	
Acct. Name(s)	
Line Items #	
Other Funding	

STAFF'S RECOMMENDATION: Motion to approve agreement between Eriberto (Eddie) Benevides and the City of La Marque for use and maintenance of the baseball fields at Mahan Park, as recommended by Parks Board

FISCAL IMPACT: N/A

CITY OF LA MARQUE
AGREEMENT FOR USE OF CITY LAND FOR ATHLETIC FUNCTIONS

SECTION 1. Parties. This Agreement ("Agreement") is made by and between the City of La Marque, Texas (hereinafter called "City") and Eriberto Benevides - Hustle 10U (hereinafter called lessee).

SECTION 2. City hereby grants Lessee permission to the use of all Baseball Fields located in **Mahan Park,** (Premises), said Premises being owned by the City of La Marque and located within the corporate limits of the City.

SECTION 3. Consideration. As consideration for use of facilities, lessee shall pay the City the sum of **$1.00 per year.** During the term of this Agreement, lessee shall also pay any portion which exceeds **$ -0- per month** for water service to the Premises no later than fifteen (15) days after receipt of invoice. If payment is not received by due date, the lessee will pay an additional **$ -0- per day** after due date. The City of La Marque is not responsible for the payment, repair work or any other use of electricity at Mahan Park. If electricity is needed during the use of the premises, the Lessee shall make all the necessary arrangements.

SECTION 4. Term and Termination. This Agreement to use the Premises granted herein shall be for a period of three (3) year(s) commencing on **November 13, 2018** and terminating on **November 13, 2021** **(except during the month of October)** provided that City may at any time, on not less than (30) days advance written notice to the Lessee, revoke permission to use the Premises herein granted and may take possession of the Premises without being guilty in any manner of trespass; and all claims for damages for and by reason of such re-entry are hereby expressly waived by Lessee. It is agreed that City revocation of this Agreement prior to the expiration of the term hereof must be authorized by the City Council at a regular or special meeting. Lessee shall provide the Public Works Director a schedule of Lessees days and times of practice use of facilities and days and times of games. During this time, Lessee shall have exclusive use of the fields during these times. When Lessee is not using the fields for practices and/or games, the fields may be used by the general public for recreational purposes. The Lessee shall not sublet the fields to any other organization for practice, games or tournaments without the written consent of the City.

SECTION 5. Actions on Termination and Indemnity. Upon termination or expiration of this Agreement, Lessee agrees to peacefully give up the use and possession said premises to City and shall remove all equipment, uniforms, and personal property. Upon termination or expiration of this Agreement, all physical improvements placed upon the Premises by Lessee shall remain in place. It is further agreed that the City Council (or their designee) shall have the right to approve all plans and specifications before any improvements are made to the Premises by Lessee, other than normal maintenance. Lessee shall submit plans and specifications to the Parks Board for their approval, then to City Manager or designee for review and recommendation to City Council.

It is expressly understood and agreed that Lessee shall indemnify and hold City harmless from any liability for payment of any obligations incurred by Lessee or due to any improvements, etc. placed in or upon said Premises by Lessee. Lessee shall not encumber, in any manner, nor permit a lien of any type to be placed on, said Premises, and Lessee agrees to indemnify and hold City harmless in regard to any such financial obligations, liens, or encumbrances of any kind.

SECTION 6. Concession Stand. Licensee shall be permitted to operate a concession stand located next to the athletic fields on the Premises and shall be permitted to sell merchandise and non-alcoholic beverages during the period from one (1) hour immediately before an athletic event commences until one (1) hour immediately after said athletic event ends. Licensee shall provide adequate and suitable containers for collecting discarded cups, papers, and trash from the operation of said concession stand and shall be responsible for keeping the entire Premises free of all papers, cups, and trash from resulting from operations of said concession stand. At no time shall Licensee sell or allow the sale of beer, wine or any other alcoholic beverage. Lessee shall prior to the opening of the concession stand obtain a Health permit from the Galveston County Health Department and maintain compliance throughout the operation of the concession stand. Any improvements to the concession stand are to meet compliance standards and shall be the responsibility of the Lessee.

SECTION 7. Equal Opportunity. It is agreed and understood that Premises are owned by the City are the subject of this Agreement and that in the conduct of Lessee's operation thereon, discrimination on account of race, color, sex, religion, age, disability, or national origin, directly or indirectly, is strictly prohibited.

SECTION 8. Maintenance and Responsibility. Lessee shall maintain the Premises in good condition satisfactory to City. Lessee shall be responsible for the costs of utility service to the Premises as discussed in Section 3. Lessee shall at their own cost provide mowing. Lessee shall at their own expense be responsible for the maintenance of the fields for safety of the participants. Lessee shall also be responsible for all field lining and preparation of fields. Any unusual circumstances necessitating City assistance must be reported immediately to the Director of Public Works.

SECTION 9. Commercial Advertising. Lessee shall be able to generate revenue for the organization with the sale of fence advertising. All advertising shall be of good taste for a family venue and professionally created. Lessee shall be responsible for the installation of fence advertising at the start of the season and the removal of all advertising at the conclusion of the season. Lessee shall be solely responsible for the maintenance of all sign advertising.

SECTION 10. Annual Report and Financial Statement. It is agreed that Lessee shall furnish to the City Manager or her designee a financial statement of the past year's operation by **September 30** of each year.

SECTION 11. Insurance and Indemnification. As a condition precedent to the effectiveness of the agreement hereby granted, Lessee agrees to indemnify and hold harmless City, its officials, employees, and agents from and against any and all costs, claims, and damages (including attorney's fees) that may be caused by the use of the Premises, and shall protect and indemnify City from any and all claims, cost, expenses, judgments, and causes of action arising out of or in any way related to the use of the Premises, and shall defend any litigation arising in connection with such use at its own cost and expense. In addition, Lessee agrees to obtain and maintain an insurance policy naming the City as additionally insured. Such policy shall be for not less than

$500,000.00 per person for bodily injuries, not less than $100,000.00 for property damage, and an aggregate limit of not less than $1,000,000.00 per occurrence. Proof of payment of premium for said policy and a copy of said policy shall be delivered to and kept by the City Manager or her designee and such insurance shall be maintained in full force so long as this Agreement is in effect. Not less than ten days prior to expiration of a current insurance policy, Lessee shall provide a copy of a new or replacement insurance policy to the City Manager of the City inclusive of evidence of the City continuing to be named as an additional insured under the policy. Failure to provide such proof of insurance as agreed upon shall negate any use of City facilities until such compliance has been satisfied.

SECTION 12. Validity. Each section, subsection, provision, requirement, regulation, or restriction established by this Agreement is hereby declared to be independent, and the holding of any part to be unconstitutional, invalid, or ineffective for any cause shall not affect or render invalid this Agreement or amendments hereto, as a whole or any part thereof, except the particular part so declared to be invalid.

SECTION 13. Authority. Each individual signing this Agreement certifies that he or she has been duly authorized to sign this Agreement by the party for whom he or she signs.

SECTION 14. Applicable Law. This Agreement shall be governed by and construed in accordance with the laws of the State of Texas. Venue shall be in Galveston County.

SECTION 15. Attorney's Fees. The party prevailing in any dispute under this Agreement shall be entitled to recover its reasonable attorney's fees and costs in addition to all other relief.

SECTION 16. Binding Effect. This Agreement shall be binding upon and insure to the benefit of the parties and their respective heirs, personal representatives, successors and assigns. Notwithstanding the foregoing, Lessee may not assign its interest under this Agreement without obtaining the prior consent of the City, acting through its City Council. If Lessee desires to assign its interest under this Agreement, Lessee must submit a written request to the City Manager seeking permission to assign its interest and identify to whom the Lessee proposes to assign its interest and the terms of any such assignment. The request for assignment will be considered by the City Council at a regular meeting and the City Council, in its sole discretion, may vote to consent to the assignment or vote to not consent to the assignment.

SECTION 17. Counterparts. This Agreement may be executed in one or more counterparts which, when taken together, shall constitute one and the same document. This Agreement may be executed by facsimile signature or by a signature transmitted by facsimile and such facsimile signature or such signature transmitted by facsimile shall be considered the same as an original signature for all purposes.

SECTION 18. Correspondence. All correspondence to the City shall be mailed or delivered to:

City Manager
1111 Bayou Road
La Marque, Texas 77568

Lessee shall notify in writing to City their point of correspondence.

LESSEE:

_____

By: _____

Name: _____

Title: _____

Date: _____

ATTEST:

By: _____
Name: Robin Eldridge
Title: City Clerk
City of La Marque

CITY:

CITY OF LA MARQUE, TEXAS

By: _____

Name: Charlene Warren

Title: City Manager

Date: _____

1111 Bayou
La Marque, Texas 77568
409.938.9202

CITY OF LA MARQUE
PARKS BOARD
REGULAR MEETING MINUTES
OF
SEPTEMBER 20, 2018

Minutes of the City of La Marque Parks Board Regular Meeting held on September 20, 2018, beginning at 6:30 p.m. at 1109-B Bayou Road with the following members present:

(1) CALL TO ORDER

Chairperson Louis McGaffey called the meeting to order at 6:30 p.m.

(2) ROLL CALL

PRESENT:	**ABSENT:**
Louis McGaffey	Michael Bock
C.J. Leggett	Larry Walker
Herbert Franklin	
Bo Hunter	
Al Reida	
Tamara Williams	

OTHER OFFICIALS/STAFF PRESENT:

Deck Shaver, Interim- Public Services Director
Venisha Henderson, Public Services Administrative Assistant

(3) APPROVAL OF MINUTES

a. Board Member Hunter made a motion to approve the Parks Board Special Meeting minutes of September 20, 2018. Board Member Leggett seconded. **MOTION PASSED UNANIMOUSLY.**

(4) PRESENTATIONS/PROCLAMATIONS

There was none.

(5) FINANCIAL REPORT

Board Member Reida made a motion to approve the Financial Report ending August 2018. Board Member Franklin seconded. **MOTION PASSED UNANIMOUSLY.**

(6) CITIZENS PARTICIPATION

There was none.

1111 Bayou
La Marque, Texas 77568
409.938.9202

(7) OLD BUSINESS

a. Discussion/possible action regarding status of Master Parks Plan/Grants
No status update available.

b. Discussion/possible action regarding status of initiated Parks Board Projects
(Back up to be provided at meeting.)
Board Member Williams asked about the removal of the non-living pine tree located at Westlawn Park and for this project to be added to the Parks Board Spreadsheet. Board Member Franklin asked the status of the culvert installation and restrooms at Mahan Park. Ms. Henderson explained to the Board that Ms. Hobby is currently working with a plumber on the restroom repairs and culvert installation will have to be placed on schedule now that the fence has been put up. Board Member Franklin asked if the football team can build shelters on the other side of the football field as was discussed before? Ms. Henderson stated she would get information on that request and provide for next Parks Board Meeting. Chairperson McGaffey asked about the brush being removed from Mahan Park that the football team put out after cleaning the field and he was informed by the Sanitation Manager that the brush is out of compliance and was unable to have it removed unless he gets the brush in compliance. Chairperson McGaffey stated the brush needs to be removed because people are starting to throw their trash on top of it making it an illegal dumping site. Ms. Henderson told Chairperson McGaffey she will have Public Services pick up the brush this one time out of courtesy, but going forward, whoever is maintaining the football field needs to make sure they are in compliance with the brush, so it can be removed or dispose of it themselves in the dumpster at Mahan.

c. Discussion/possible action regarding Bayou Fest, October 2018.
Chairperson McGaffey asked if the gates and restroom at Mahan and Highland Bayou Park will be painted before Bayou Fest and Ms. Henderson replied, "yes." Chairperson McGaffey needs the crushed concrete out at the back roads at Highland Bayou Park as soon as possible, and Ms. Henderson will get the status on when the crushed concrete will be delivered and when Joe will be out with the maintainer. The playground equipment for Highland Bayou Park and Mahan Park has a Purchase Order in place and has already been ordered. The Board Members will be notified once playground equipment is delivered.

(8) NEW BUSINESS

a. Discussion/possible action regarding the extension of Eriberto Benevides contract for Hustle 10U Baseball Team at Mahan Park. (NO ACTION TAKEN FROM A PREVIOUS PARKS BOARD AGENDA- 3.16.2017)
Mr. Benevides is requesting for an extension to his baseball contract at Mahan Park. Chairperson McGaffey stated that Mr. Benevides put in a lot of time and

1111 Bayou
La Marque, Texas 77568
409.938.9202

money into this baseball field and deserves to have his contract extended with the approval of Council. If his contract is extended, there are some electrical repairs needed for the lights next to the baseball field at Mahan Park. Baseball field cannot be utilized past a certain time because it is too dark, and the lights do not turn on. He has tried to get in contact with Crescent Electric but no returned phone call. Mr. Benevides is wanting to add an indoor batting cage by the tennis court if contract is approved. Board Member Bo Hunter made a motion to extend Mr. Benevides Baseball Team's contract with Council approval. Board Member Al Reida seconded. **MOTION PASSED UNANIMOUSLY.**

b. Discussion/possible action regarding Keep La Marque Beautiful Commission Fall Sweep Event November 3, 2018.
Parks Board will participate in this event. Chairperson McGaffey stated the Board Members will put together a list of what volunteers are wanting to do for this event and provide at the next Parks Board Meeting.

c. Discussion/possible action regarding the next Parks Board Meeting.
The next Parks Board will be held October 20, 2018.

(9) REQUESTS AND ANNOUNCEMENTS

(10) ADJOURNMENT

It was the consensus of the Board to adjourn the meeting at 7:13 p.m.

_____
Louis "Mac" McGaffey, Chairperson
Parks Board

CITY COUNCIL AGENDA FORM

Meeting Date: November 12, 2018 Agenda item: **10c**
Prepared by: Charlene Warren Reviewed by: *Charlene Warren*
Department: Administration

AGENDA ITEM DESCRIPTION: Discussion/possible action regarding approval of an agreement for grant administration services with Provision Specialized Resources, LLC

[X]

ATTACHMENTS FOR REFERENCE
1. **Proposed Agreement**

STAFF BRIEFING
- Last year, the City sought a firm to assist with grant applications and administration; namely Community Development Block Grants – Disaster Recovery (CDBG-DR); Hazard Mitigation Grant Program (HMGP), among others.
- Provision Specialized Resources, LLP was selected and awarded.
- Contract details have been formalized and are presented to Council for final approval.
- City Attorney has reviewed and approved agreement content.

TARGET IMPLEMENTATION: November 12, 2018

SIGNIFICANT ACTION DATES
1.8.2018 – RFP awarded to Provision for grant administration services

ACTION:
- ☐ Ordinance
- ☐ Resolution
- ☐ Special Presentation
- ☐ Proclamation
- ☐ Finance Report
- ☐ Public Hearing
- ☒ Other - Agreement
- ☒ Mark if this item does not conflict with any Resolution, Ordinance or City Charter, policies, procedures

Cost Details:	
Budgeted	N/A
Actual Bid	N/A
Estimated Expenditure	N/A
Acct. Name(s)	N/A
Line Items #	N/A
Other Funding	N/A

STAFF'S RECOMMENDATION: Motion to approve an agreement for grant administration services with Provision Specialized Resources, LLP

FISCAL IMPACT: Varies dependent upon grant awards; administrative fees generally included in grants award.

Professional Services Agreement

This Professional Services Agreement ("Agreement") is made and entered this ___ day of _____, 2018 ("Effective Date") by and between **Provision Specialized Resources, LLC** whose address is **3698 Vernon Drive, Zachary, LA, 70791**, hereinafter referred to as "Provision" and **City of La Marque, Texas** whose address **1111 Bayou Road, La Marque, Texas 77568,** hereinafter referred to as "City" (collectively the "Parties").

WITNESSES:

WHEREAS, The City has procured a General Grant Administrator to take on the Application, Administration, and Project Management of grants from various sources. work and services ("Work") to be performed by an independent contractor; and

WHEREAS, Provision is able, willing, and capable, and possesses the necessary technical knowledge, trained personnel, equipment, licenses, and expertise to perform the Work as an independent contractor to be requested by the City.

NOW, THEREFORE, in consideration of the provisions for payment and the mutual terms, conditions, and covenants hereinafter set forth, the Parties agree as follows:

1. TERM

   This Agreement shall be effective from April 26, 2018 till April 26, 2023.

2. SERVICES

   The work performed by Provision under this Agreement shall be performed for the City of La Marque, Texas, solely.

3. COMPENSATION

   See Attachment A

4. INDEPENDENT CONTRACTOR/SUPERVISION

   Provision shall perform the Work as an independent contractor not as an employee of the City. Provision will not represent itself to third persons as other than an independent contractor of the City, nor shall Provision offer or agree to assume any obligations or commitments in the City's name. Provision shall have the right and obligation to control the manner, means, and details of its performance of the Work. Any provisions in the Scope of Work that appear to give the City the right to direct or control details of Provision's performance of the Work or exercise any measure of control over the Work shall be deemed to mean that Provision shall follow the desires of the City in the results of the Work only; such provisions shall not be construed as granting the City control over the performance of the Work or the manner, means, or details by which it is to be accomplished.

5. INSPECTION AND UTILITIES

All Work performed by Provision shall be subject to inspection and approval by the City at all reasonable times, but such approval shall not relieve the Provision of responsibility for its proper performance of the Work.

6. INSURANCE

Provision attached is a "Certificate of Insurance" to the City, confirming that such minimum coverages and limits are in effect, and such insurance coverages shall not be canceled without thirty (30) days' advance written notice to the City. The City shall be named as added insured on the general liability, umbrella, and automobile insurance policies. **See Attached Certificate of Insurance**

7. INDEMNITY

Provision agrees to indemnify, defend, and hold harmless the City, their officers, agents, and employees, from and against all liabilities, losses, damages, demands, claims, proceedings, judgments, orders, suits, taxes, costs and expenses, including reasonable legal fees and other expenses of litigation to the extent the foregoing result from (i) the negligent acts, errors or omissions of Provision, its officers, employees, subcontractors, or agents under this agreement, occurring during Provision's performance of the Work, or (ii) any breach of the duties or obligations under this Agreement by Provision, its officers, employees, subcontractors, or agents. The foregoing obligation shall include but not be limited to (1) personal injury, disease, or death of any person, including Provision's, the City's employees, (2) loss of or damage to property of any type, (3) professional liability arising out of errors or omissions and/or negligence about the performance of the Work or services under the Scope of Work, (4) any contamination of, injury or damage to, or adverse effect on persons, animals, aquatic, or wildlife, vegetation, waters, air, land, or environment, (5) any violation by Provision of any applicable federal, state, or local law, rule, or regulation, or (6) any patent or copyright infringement by Provision.

The City agrees to indemnify, defend, and hold harmless to the extent allowed by law Provision, its officers, agents, and employees, from and against any and all liabilities, losses, damages, demands, claims, proceedings, judgments, orders, suits, taxes, costs and expenses including reasonable legal fees and other expenses of litigation to the extent the foregoing result from (1) the negligent acts, errors or omissions of The City, its officers, employees, subcontractors, or agents under this Agreement, or (2) any breach of the duties or obligations under this Agreement by the City, its officers, employees, subcontractors, or agents. The foregoing obligation shall include but not be limited to

(1) personal injury, disease, or death of any person, including Provision's, the City's employees, (2) loss of or damage to property of any type, (3) professional liability arising out of errors or omissions and/or negligence in connection with the performance of the Work or services under the Scope of Work, (4) any contamination of, injury or damage to, or adverse effect on persons, animals, aquatic or wildlife, vegetation, waters, air, land, or environment, (5) any violation by the City or its subcontractors of any applicable federal, state, or local law, rule, or regulation, or (6) any patent or copyright infringement by the City or its

subcontractors or suppliers.

This section shall survive the conclusion of this Agreement.

8. CONFIDENTIALITY

Provision shall only utilize information received from the City for providing the services contemplated under this Agreement. The Provision shall not divulge, directly or indirectly, any information acquired by the Provision from the City in the performance of this Agreement to any third party without the express written consent of the City. Any demand for such information shall be forwarded to the City within 48 hours of receipt of such demand by the Provision.

The City shall only utilize information received from the Provision for fulfilling its duties and obligations under this Agreement. The City shall not divulge, directly or indirectly, any information acquired by the City from Provision in the performance of this Agreement to any third party, unless required by law, without the express written consent of the Provision. Any demand for such information shall be forwarded to the Provision within 48 hours of receipt of such demand by the City.

9. CHANGES

The City may request changes to the Scope of Work after the applicable Work Order has been fully executed. If Provision believes a proposed change will either increase or decrease the cost and/or time required for performance, Provision shall so notify the City, and any subsequent change satisfactory to both Provision and the City shall be reduced to writing, executed by Provision and the City, and shall thereafter modify this Agreement accordingly.

10. NOTICES

Any notice, invoice or statement supported in this Agreement shall be in writing and shall be considered duly delivered when mailed by registered or certified mail, postage prepaid, to the following:

TO: City

City of La Marque
1111 Bayou Road
La Marque, Texas 77568

TO: Provision

Provision Specialized Resources, LLC 3698 Vernon Drive.
Zachary, LA 70791
Attn: Alice Ashley

11. REGULATIONS

Provision certifies that unless specifically exempted, all products, commodities, or services furnished under this Agreement have been manufactured, processed, delivered, and/or performed in full compliance with all applicable laws and regulations including but not limited to the Civil Rights Act of 1964, as amended; the Equal Pay Act, as amended; the Age Discrimination in Employment Act, as amended; Executive Orders 11246 and 11141 (Title 41, Chapter 60, Code of Federal Regulations); the Vietnam Era Readjustment Act of 1974; the Rehabilitation Act of 1973; Executive Order 11758 (Title 20, Chapter VI, Part 741, Code of Federal Regulations); and, all Regulations, Rules, and Orders thereunder. Provision hereby agrees that all the applicable provisions of the above Orders, Acts, Rules, and Regulations, as same may be amended or superseded, are hereby made a part hereof by reference and are binding upon Provision.

12. ENTIRE AGREEMENT; AMENDMENTS AND WAIVERS

This Agreement, together with the Exhibits attached hereto and incorporated herein by this reference, constitute the entire agreement between the Parties pertaining to the subject matter hereof and supersede all prior agreements, understandings, negotiations, and discussions, whether oral or written, of the Parties. No supplement, modification, or waiver of this Agreement shall be binding unless executed in writing by the Parties hereto. No waiver of any of the provisions of this Agreement shall be deemed or shall constitute a waiver of any other provision hereof (regardless of whether similar), nor shall any such waiver constitute a continuing waiver unless otherwise expressly provided.

13. GOVERNING LAW

The provisions of this agreement and the documents delivered pursuant hereto shall be governed by and construed per the laws of the State of Texas.

14. TAX IDENTIFICATION NUMBER

Provision hereby appoints **35-2571198** as its tax identification number for all purposes which may require the City to report to taxing authorities moneys paid to Provision for work provided hereunder.

15. HEADINGS

The headings of the paragraphs and sections herein are inserted for convenience of reference only and are not intended to be a part of or to affect the meaning or interpretation of this Agreement.

16. OWNERSHIP OF DOCUMENTS

All drawings, specifications, reports, information, or data prepared by Provision specifically for the City in fulfillment of the services to be provided under this Agreement shall be the property of the City. Notwithstanding anything to the contrary contained in this Agreement, Provision's preexisting proprietary information, including but not limited to software, computer programs, standard details, and specifications, shall remain the exclusive property of Provision. Any reuse of the documents prepared by Provision under this Agreement for other than their specific intended purpose will be at the sole risk of the user and

without liability or legal exposure to Provision.

17. SUSPENSION AND/OR CANCELLATION

Should either Party be unable to fulfill its obligations under this Agreement in a prompt and professional manner, the other Party shall have the right to cancel or suspend this Agreement with ten (10) days written notice, that shall include from either party a “reason of circumstance”. Neither Party shall be considered in default hereof should its failure to fulfill its obligations hereunder be the result of forces beyond that Party’s control.

18. SAFETY

Provision shall become familiar with, adhere to, and enforce all rules and regulations established for the project site by the City.

Provision acknowledges that it possesses the federal, state, and local permits, licenses, and certifications necessary to practice in the state in which the work is to be performed and shall perform the work in a manner consistent with all applicable regulatory and industry standards.

19. ASSIGNMENT

Neither Party shall assign or transfer this Agreement or any interest herein without the written consent of the other party hereto.

20. PROFESSIONAL STANDARDS

The Provision shall perform the Work provided for in this Contract in conformance with the standards of care and practice appropriate to the nature of the Work and exercise the degree of thoroughness, competence and care that is customary in its profession and in a professional manner consistent with the interests of the City.

The Provision agrees that it has or shall obtain, at its expense, before performing any Work all the necessary certificates, permits, licenses, and authorizations to perform Work and conduct business, shall perform all Work in accordance with applicable Law, shall perform all Work in good faith, promptly and with due diligence and fully comprehends the requirements and contingencies for performing Work.

21. CONSEQUENTIAL DAMAGES

Neither party shall be liable to the other for special, indirect, punitive, or consequential damages resulting from or arising out of this Agreement, including, without limitation, loss of profit or business interruptions, however same may be caused.

22. EXECUTION AND COUNTERPARTS

This Agreement may be executed in several counterparts, each of which shall be an original, all of which shall constitute but the same instrument.

IN WITNESS, WHEREOF, the Parties hereto have caused this Agreement to be executed as of the day and year first above written.

Provision Specialized Resources, LLC

By_____

Title_____

Date_____

ATTEST/WITNESS:

By_____

Title_____

Date_____

City of La Marque, Texas

By_____

Title_____

Date_____

ATTEST/WITNESS:

By_____

Title_____

Date_____

ATTACHMENT A

Public Assistance and Project Worksheet

Project Worksheet/Public Assistance Subject Matter Expert:	$150.00/hr.
Senior Recovery Specialist:	$125.00/hr.
QA/QC Specialist:	$75.00/hr.
Administrative Assistant:	$50.00/hr.
Close-Out Specialist:	$75.00/hr.

Provision proposes a "*Not to Exceed"* amount of *Four Hundred Thousand Dollars ($400,000.00)* over the life span of the awarded contract.

Due to the varying allowable administrative fees per grant type:
Upon award, Provision proposes a fee amounting to .75% less of the allowed grant administrative cost for amount of each total grant award.

Housing Activities (Rental and Non-Rental):
Administration Expenses: Any expenses incurred in carrying out the program that are not directly connected to a specific project. Administration fees are capped at 2% of the Total CDBG-DR Award amount.

2% of the CDBG-DR Award Amount

Project Delivery Expenses: Anything DIRECTLY connected to the delivery of a specific project.

Project Delivery (PD) fees are capped at 10%.

Provision's proposed project delivery expense: 9% of the CDBG-DR award amount

Non-Housing Activities (Infrastructure):

CDBG-DR Award	Provision Fee:
$249,999.99 or less	**10%**
$250,000.00 to $749,999.99	**8%**
$750,000.00 to $999,999.99	**6%**
Over $1,000,000.00	**4%**

CITY COUNCIL AGENDA FORM

Meeting Date: November 12, 2018 Agenda item: **10d**
Prepared by: Chief Kirk Jackson Reviewed by: *Charlene Warren*
Department: Police

AGENDA ITEM DESCRIPTION: Discussion/possible action regarding authorizing the Mayor to enter into a Mutual Aid Law Enforcement Agreement whereas participating municipalities/agencies (to include the Galveston County Sheriff's Office) may request law enforcement assistance from any entity that has signed the Agreement

☒ **ATTACHMENTS FOR REFERENCE**

1. Mutual Aid Agreement Between the Municipalities of Galveston County and the County of Galveston

STAFF BRIEFING:

- This agreement is reasonable and will assist our city by insuring our police department receives supplemental law enforcement resources during natural and man-made emergencies and/or disasters.
- Additionally, law enforcement scenarios that are not emergencies will now be facilitated by the reasonable protocols expressed within the agreement.
- City Attorney Ellis Ortego has reviewed the agreement and his legal opinion is that the agreement is valid.

HISTORY:

- This Agreement was last executed between the Galveston County Sheriff's Office and the City of La Marque in September of 2014.
- At the request of the Sheriff, the Agreement is being presented for renewal.

TARGET IMPLEMENTATION: November 13, 2018

SIGNIFICANT ACTION DATES:
9.8.2014 - The previous Mutual Aid Agreement was brought before Council
11.12.2018 - This renewal is being presented to Council for the first time

ACTION:

☐ Ordinance ☐ Resolution
☐ Special Presentation ☐ Proclamation
☐ Finance Report ☐ Public Hearing
☒ Other - Agreement

Cost Details:	
Budgeted	
Actual Bid	
Estimated Expenditure	**N/A**
Acct. Name(s)	
Line Item #	
Other Funding	

Rev. 09/24/2014

CITY COUNCIL AGENDA FORM

☒ Mark if this item does not conflict with any Resolution, Ordinance or City Charter, policies, procedures

---

STAFF'S RECOMMENDATION: Motion to authorize the Mayor to enter into a Mutual Aid Law Enforcement Agreement whereas participating municipalities/agencies (to include the Galveston County Sheriff's Office) may request law enforcement assistance from any entity that has signed the Agreement.

FISCAL IMPACT: There is no cost associated with this Agreement.

Mutual Aid Law Enforcement Agreement Between the Municipalities of Galveston County and the County of Galveston

1. Parties

This Interlocal Cooperation Agreement is between various **Municipalities** whose jurisdiction is wholly or partially within Galveston County and the **County of Galveston.** The **County of Galveston** and the **Galveston County Sheriff's Office** are collectively referred to herein as the **"County."** This Agreement is being executed pursuant to Chapter 791 of the Government Code, commonly known as the Interlocal Cooperation Contract Act and Chapter 362 of the Local Government Code commonly known as the Mutual Aid Law Enforcement Services Act. The **Municipalities** who have executed this Agreement and the **County** shall, hereafter, sometimes be collectively referred to as Participating Agencies.

2. Purpose

The purpose of this Agreement is to.

(a) Enable a Requesting Agency to contact the County and the appropriate Municipality's law enforcement agency to request the establishment of a joint task force. The request will define the scope of the task force and the time when the Requesting law enforcement agency desires to jointly perform investigations, interviews of and execute warrants outside of the Requesting Agency's jurisdictional boundaries but within the jurisdictional boundaries of the other Participating Agencies for criminal offenses having allegedly occurred within the jurisdiction of the Requesting Agency's jurisdiction.

(b) Enable a Requesting Agency to contact the County and/or a Municipality's law enforcement agency to request the temporary provision of additional law enforcement officers when the Requesting Agency finds itself in need of additional officers due to absences or leave. The request will define the scope of the necessity for law enforcement officers and the time when the Requesting Agency will need the additional law enforcement officers. The additional law enforcement officers while assigned to the Requesting Agency will have all the powers of a regular law enforcement officer of the Requesting Agency as fully as if the officer were employed by the Requesting Agency and within the jurisdictional boundaries of the Requesting Agency.

(c) Cooperate and share information with County law enforcement officers and the

other Participating Agencies during such times the task force performs the activities described in (a) and (b) above.

(d) Allow law enforcement officers employed by any of the Participating Agencies, upon observing a criminal offense being conducted within the officer's presence or view or while acting in furtherance of the execution of a properly issued warrant of arrest, to make an arrest outside the Municipality in which the officer is employed but within the areas covered by this Agreement.

(e) Notify without delay the County and the law enforcement agency of the Municipality of the arrest and the notified agencies shall make available the notice of the arrest in the same manner as if the arrest were made by a member of that agency.

(f) Provide available **County** deputy sheriffs to all other Participating Agencies to cooperate in task force criminal investigations and other law enforcement duties set forth in this Agreement and during times of natural or man-made disasters or other emergency situations in accordance with §362.002 of the Texas Local Government Code.

(g) Provide available municipal law enforcement officers to all other Participating Agencies to cooperate in task force criminal investigations, and other law enforcement duties set forth in this Agreement and during times of natural or man-made disasters or other Emergency Situations in accordance with §362.002 of the Texas Local Government Code.

3. **Definitions**

(a) "Emergency Situation" shall mean either:

1) an actual or potential condition within the Municipality's jurisdiction when the Chief of Police or his designee is of the opinion that a condition poses or would appear to pose an immediate threat to life or property and additional law enforcement officers are desired to address the situation. It also means upon notification and request for such emergency assistance by the Municipality's dispatcher; or

2) an actual or potential condition within unincorporated areas when the **County** Sheriff or his designee is of the opinion that a condition poses or would appear to pose an immediate threat to life or property and additional law enforcement officers are desired to address the situation. It also means upon notification and request for such emergency assistance by the County's dispatcher.

(b) "Requesting Agency" shall mean the law enforcement agency making the request for law enforcement assistance from another Participating Agency.

(c) "Providing Agency" shall mean the law enforcement agency who agrees to render law enforcement assistance to the Requesting Agency.

(d) "Participating Agencies" shall mean the Municipalities who have executed this Agreement and the County of Galveston.

(e) "Investigate" shall mean to carry out an official inquiry or detailed examination in order to glean information relating to an ongoing criminal investigation.

(f) "Interview" shall mean a meeting designed for asking questions or recording of an interview.

(g) "Warrant" shall mean a written document authorizing law enforcement specific rights or powers to search or arrest an individual.

(h) "Criminal Investigation" shall mean the investigation of criminal acts committed against the Texas Penal Code, Code of Criminal Procedures, the Health and Safety Code or other applicable state or federal law.

(i) "Law Enforcement Officer" means a municipal police officer including the Chief of Police, the **County** Sheriff, or a **County** deputy sheriff, who has been and currently maintains his/her commission as a peace officer under the laws of the State of Texas.

(j) "Task force" means a group of law enforcement officers from multiple jurisdictions assembled by any means for lawful purposes with a focus of achieving some law enforcement related goal.

(k) “Potential Condition” includes a potential risk to the health and safety of the community created when a Requesting Agency determines it does not or will not have enough law enforcement officers due to absences or leave.

4. Terms and Conditions

a) During an ongoing criminal investigation, after notification as set forth in d) below, law enforcement officers of the investigating Participating agency are permitted to enter the jurisdiction of other Participating Agencies for joint follow-up investigations and interviews, and the execution of warrants as necessary. In such instances, the law enforcement officer entering the jurisdiction of another Participating Agency will notify in advance both the dispatch of his/her law enforcement agency and the other Participating Agency of his/her desired activities.

b) In the event of an arrest, the arresting peace officer will notify the law enforcement agency with jurisdiction of the area where the arrest is made of

the arrest as soon as is reasonably practicable under the circumstances.

c) In the event of an Emergency Situation upon request for assistance made by a Requesting Agency, the Providing Agency will furnish such peace officers, vehicles and equipment as are readily available provided such action would not unreasonably diminish the Providing Agency's capacity to provide its own services within its jurisdiction.

d) The Requesting Agency's Chief of Police, or his designee, wi1l implement each request for task force activities on behalf of their **Municipality** to the **County** directly to the **County** Sheriff or his designee. Similarly, the request will be directed to each **Municipality** by notifying its Chief of Police or his/her designee. In addition to the above method of requesting assistance, in the event of an Emergency Situation notification and request for assistance by the Requesting Agency's dispatcher to the **County's** and/or the **Municipality's** dispatcher will be sufficient to constitute a request.

e) The **County** Sheriff or his designee will implement each request on behalf of the **County** to the **Municipality**. Each request will be made directly to the Providing Agency's Chief of Police or his/her designee. In addition to the above method of requesting assistance, in the event of an Emergency Situation notification and request for assistance by the **County's** dispatcher to the Providing Agency's dispatcher will be sufficient to constitute a request. But, nothing in this subparagraph e) will be construed to abrogate, diminish or otherwise interfere with any jurisdiction or authority currently belonging to the **County** Sheriff by law.

f) In order to invoke assistance hereunder the Requesting Agency shall notify the Providing Agency by telephone or in writing (fax or e-mail shall suffice as a "writing") when feasible. The Providing Agency may request such additional information deemed necessary to confirm the type and amount of assistance needed or necessary.

5. Command of Requesting Agency during Emergency Situation

Once a response has been approved and implemented by the Providing Agency during an Emergency Situation each law enforcement officer furnished to the Requesting Agency shall:

a) report to and is under the command of the Requesting Agency's Chief Executive Officer (Chief of Police or Sheriff) or his designee;

b) have all the powers of a regular law enforcement officer of the Requesting Agency as if the law enforcement officer or deputy were employed by such

Requesting Agency;

c) be required to respond to lawful orders given by the Requesting Agency's Chief Executive Officer (Chief of Police or Sheriff) or his designee; and

d) shall have those law enforcement powers provided to peace officers by state law.

6. Communication during Emergency Situation

Whenever possible, radio communications shall be established and maintained between the parties through appropriate means.

7. Payment for Services during Emergency Situation

The Requesting Agency shall pay the salary and provide such benefits it customarily provides to each law enforcement officer while they are under the command of the Requesting Agency. The Requesting Agency, in accordance with Chapter 791.011 of the Government Code and Chapter 362.003 of the Local Government Code will, upon receipt of an invoice, reimburse the Providing Agency for payments made on behalf of each such officer within 30 days of the date of each request.

8. Payment from Current Revenue during Emergency Situation

The Requesting Agency will make all payments from current revenues available to the Requesting Agency.

9. Third Party Claims during Emergency Situation

The Requesting Agency is responsible for any civil liability that arises from the furnishing of services by the Providing Agency. Nothing in this agreement shall be construed to either add to or change the liability, limits and immunities for either party provided by the Texas Tort Claims Act, Chapter 101 or the Texas Civil Practice and Remedies Code or other law. Neither shall it be construed to give arise to liability or responsibility for failure to respond to a request for assistance. Nor is it intended to benefit any third party or parties and no third party shall have any right of action hereunder as a result of the parties entering into this Agreement.

10. Termination of Participation

Any Participating Agency may terminate its participation in this Agreement by providing the other Participating Agencies with at least thirty (30) days prior written notice of its desire to terminate and the effective date of termination. In the event that notice of termination is properly given, the Participating Agency will be relieved of future obligations or commitments made under this Agreement. However, no terminating

Participating Agency will be relieved of any obligation or responsibility incurred prior to the effective date of termination.

11. Venue

Venue for any suit regarding this Agreement is Galveston County, Texas.

12. Entire Agreement

This is the entire Agreement of the Participating Agencies. It may not be amended without the written consent of all Participating Agencies.

13. Approval of Head of Law Enforcement Agency

The Sheriff and the Chief of Police of each participating Municipality, by executing this Agreement, agrees to permit his law enforcement officers to perform law enforcement services on behalf of his political subdivision as is specified herein.

14. Replacement of Prior Mutual Aid Law Enforcement Agreements

This Agreement replaces any Mutual Aid Law Enforcement Agreements heretofore executed by the parties.

15. Compliance with Statutes

Nothing in this Agreement shall be construed to violate any term or provision of Texas Local Government Code Chapter 362 or Texas Government Code Chapter 791.

16. Effective Date

Notwithstanding the actual date of execution by each party this Agreement shall take effect on _____ day of_____, 2018 and shall continue in force until all Participating Agencies have terminated their participation

Participating Agencies

County of Galveston

_____
Mark Henry
Galveston County Judge
Date of Execution: _____

Attest:

_____
Dwight Sullivan
County Clerk

_____
Henry Trochesset
Galveston County Sheriff
Date of Execution: _____

Municipalities

_____	_____
Mayor City of La Marque	**Print Name**
Date of Execution: _____	

Attest:

_____	_____
City Secretary	**Print Name**

_____	_____
City Chief of Police	**Print Name**
Date of Execution: _____	

CITY COUNCIL AGENDA FORM

Meeting Date: November 12, 2018 Agenda item: **10e**
Prepared by: Chief Kirk Jackson Reviewed by: *Charlene Warren*
Department: Police

AGENDA ITEM DESCRIPTION: Discussion/possible action regarding authorizing the City Manager to execute an Interlocal Agreement with the City of League City for membership in a consortium of law enforcement agencies for the purpose of criminal justice data sharing using computer aided dispatch and records management systems.

☒ Attach for reference

1. Interlocal Agreement for Implementation and Operation of GRID System (between the City of League City and the City of La Marque)
2. Schedule A (cost sharing schedule)

STAFF BRIEFING:

- The La Marque Police Department currently operates on the Galveston County consortium.
- Membership in the Galveston County consortium has declined over the years and is now only Galveston County Sheriff's Office, Hitchcock Police Department, and La Marque Police Department.
- The La Marque Police Department is changing its membership to the City of League City consortium in order to facilitate better data sharing with other Galveston County law enforcement agencies.
- With the League City consortium, the La Marque Police Department will enjoy additional features that are not available on the Galveston County consortium's configuration.
- The City Attorney has reviewed and approved the ILA.
- Funding for the League City Consortium has been approved and is a recurring expenditure each fiscal year.

HISTORY: N/A

TARGET IMPLEMENTATION: November 13, 2018

SIGNIFICANT ACTION DATES: N/A

CITY COUNCIL AGENDA FORM

ACTION:

- ☐ Ordinance
- ☒ Resolution
- ☐ Special Presentation
- ☐ Proclamation
- ☐ Finance Report
- ☐ Public Hearing
- ☐ Other
- ☒ Mark if this item does not conflict with any Resolution, Ordinance or City Charter, policies, procedures

Cost Details:	
Budgeted	$9,000.00
Actual Bid	
Estimated Expenditure	$8,039.69
Acct. Name(s)	Software Maintenance OSSI
Line Item #	01-2035-05-00
Other Funding	

STAFF'S RECOMMENDATION: Motion to authorize the City Manager to execute an Interlocal Agreement with the City of League City for membership in a consortium of law enforcement agencies for the purpose of criminal justice data sharing using computer aided dispatch and records management systems.

FISCAL IMPACT: All costs are recurring and are annual maintenance costs for our Records Management and Computer Aided Dispatch systems.

INTERLOCAL AGREEMENT FOR IMPLEMENTATION AND OPERATION OF GRID SYSTEM

THIS AGREEMENT made this _____ day of _____, A.D. 20__ by the City of League City, Texas and the City of La Marque, and collectively referred to herein as the "parties".

WITNESSETH:

WHEREAS, the Cities of Alvin, Deer Park, Friendswood, La Porte, League City, Nassau Bay, Webster and Galveston (the "GRID System agencies") desire to make efficient use of their respective powers, resources, authority and capabilities by enabling them to cooperate on the basis of mutual advantage and thereby provide the facilities and efforts identified herein the manner that will best utilize existing resources, powers and authority available to each of them; and

WHEREAS, it is the purpose of the agreement to provide a means by which the parties may exercise their respective powers, privileges and authority which they may separately, but which pursuant to this Agreement may exercise collectively; and

WHEREAS, the parties desire to establish and provide a computer-aided dispatch, records management and mobile computer system, serving law enforcement, fire, EMS and emergency communications for each of the agencies parties, hereinafter referred to as the Gulf Region Information and Dispatch (GRID) System.

WHEREAS, the parties have determined that a consolidated system will better utilize existing municipal personnel and capital resources, increase the efficiency and effectiveness of public safety emergency responses, enhance public safety operations by standardizing equipment and records management systems, and will provide for shared costs of communications technology; and

WHEREAS, the parties have agreed that they should participate in the management and ownership of the GRID System in return for providing a proportionate share of the funding for recurring operation, maintenance and future expansion of the GRID System; and

WHEREAS, the parties desire to enter into this Agreement to establish basic parameters for the implementation, operation, maintenance and future expansion of the GRID System; and

WHEREAS, entering into this Agreement is in the best interest of the citizens of the Parties; and

NOW, THEREFORE, in consideration of the premises, mutual covenants, provisions and representations contained herein, constituting good and valuable consideration, and pursuant to Texas Government Code 791 ("Interlocal Cooperation Act"), the parties hereto agree as follows:

I. PURPOSE:

The purpose of this Interlocal Agreement is to establish a computer-aided dispatch, records management and mobile computer system, herein referred to as the GRID System, serving law enforcement, fire, EMS and emergency communications for each of the GRID agencies.

II. DURATION:

This Agreement shall remain in effect for one (1) year, commencing on November 13, 2018, and ending on November 12, 2019, and thereafter will automatically renew for successive one-year terms. However, nothing herein shall affect the right of a party to withdraw from this Agreement, as provided for in Section VII below.

III. ORGANIZATION:

The GRID System will be overseen by a Board of Directors comprised of the entities who participate on the GRID system ("the Board"). In the event an entity enters or leaves the GRID System, the designated official of the governmental entity entering or leaving the system will be automatically deemed added or removed from the Board.

Day to day operations of the GRID System will remain the responsibility of individually appointed "Systems Administrators" from each GRID System agency. The Systems Administrators for each party shall meet regularly in order to address any issues needing to be addressed relating to the GRID System. If issues cannot be resolved to the satisfaction of the Systems Administrator's group, the concerns shall be reduced to writing and submitted to the Board for resolution.

IV. FINANCIAL ADMINISTRATION

The parties hereby agree to provide financial support according to a schedule and formula set out in Schedule "A" attached hereto, which is hereby incorporated by reference into this agreement. The cost of software and hardware maintenance will be determined by annual projections from the vendors. In addition, the Board will consider and recommend a GRID system reserve assessment for future expenditures subject to the

approval of governing bodies. All costs will be pro-rated between the agencies based on calls for service, reports, bookings and accidents. In the event the City of La Marque shall allow another agency that is not a party to the GRID system to utilize the system, then the City of La Marque is responsible for those costs. Initial agency cost allocations are based upon the participation of all agencies listed in Schedule A. Should any agency choose not to participate, the costs will be reallocated proportionately to the other agencies.

Regular GRID System fees shall be assessed at the start of each fiscal year. For administration purposes, the GRID System shall operate on a fiscal year from October 1 to September 30 of the following year. Such assessment shall be approved by majority vote of the governing bodies.

A. It shall be the responsibility of the Board to prepare budget projections for up-coming fiscal years, including a detailed breakdown of estimated GRID System fees for each party agency, which shall be completed and distributed to all parties no later than March 1st of each year.
B. The City of League City shall provide basic support for the GRID system through its General Fund for ongoing costs including support personnel, and other incidental operating expenses.
C. The City of League City shall maintain the GRID system reserve fund for all assessments made for replacements or expansions of GRID system hardware and software. The City of League City will also maintain the GRID system operating fund to account for monies received and payments made related to annual maintenance.
D. Year one payments for Schedule A assessments will be due on September 1, 2019.
E. Annual payments as determined in Section IV A will be paid to the City of League City during the first quarter of each Fiscal year.
F. Expansion of the schedule matrix must be approved by a majority vote of the governing bodies of the participating jurisdictions.

V. ADMITTING ADDITIONAL AGENCIES:

Additional agencies may be admitted to the GRID System upon agreement of the Board. New agencies shall be required to meet the same terms and shall have the same responsibilities as existing parties. The Board may require new members to pay a fee of $10,000.00 to join the GRID system. The fee will be deposited into the GRID system reserve fund. New agencies will reimburse the City of League City for actual costs incurred in order to integrate them into the system.

VI. EQUIPMENT AND LICENSES:

The GRID System will use SunGard Public Sector's software. Each GRID System agency will be responsible for purchasing the hardware, software and licenses required to be used in their respective jurisdictions. Each GRID System agency will be required to maintain its own equipment and software and to pay an equitable share of the expense of maintaining the server(s) as set out on Schedule "A" attached. Each GRID System agency will have control of all hardware and software within its respective jurisdiction.

VII. WITHDRAWAL BY A PARTY:

Any party shall have the right to withdraw from the GRID System at any time upon giving ninety (90) days advance written notice to the City of League City. The withdrawing party, shall have 12 months to copy its data, but not to delete, information and/or data residing on the GRID System Server that was contributed by the withdrawing agency. This shall be done at the sole expense of the withdrawing agency and the withdrawing agency shall not be entitled to recover any portion of their contribution to the GRID system reserve fund maintained by the City of League City.

Any agency of the GRID System may be expelled with cause, by a two-thirds vote of the Board. Prior to the initiation of action to expel an agency, the Board will notify the City Manager, or Chief Executive Officer, of the agency for whom expulsion is being considered of such pending action. The agency will be provided a period of time of not less than thirty (30) days prior to the Board's decision to present reasons why expulsion for cause is not justified. Should the Board approve the expulsion of a party, the expelled party shall be considered "withdrawn" from the GRID System ninety (90) days from the date the Board votes to take such action. Once withdrawn, the agency shall have the same rights and responsibilities afforded those agencies voluntarily withdrawing from the GRID System.

VIII. COMPLIANCE WITH THE PUBLIC INFORMATION ACT AND FERPA:

Each party shall control the release of any information produced or belonging to that party which resides anywhere on the system, including, but not limited to, the server. Each agency will be required to sign a Data Access Agreement between the City of League City, the perspective agency and SunGard Public Sector.

In compliance with the Family Education Rights and Privacy Act (FERPA) 20 U.S.C. § 1232g, no participating school district, who is a party to the GRID system, shall provide or disseminate any information into the GRID system that may be considered "education records" as defined by FERPA.

IX. OPERATING RULES AND PROCEDURES:

In order to ensure consistency, all parties agree to follow the pattern, protocols and procedures established by the GRID System. Within this basic framework, the System Administrators shall, from time to time, adopt and implement such rules and procedures as it deems prudent for the further improvement and refinement of the system. The intention of this provision is to assure that the basic structure and work-flow of the system is preserved, while at the same time allowing the System Administrators to adopt necessary changes to enhance the system.

X. AUTONOMY OF PARTIES:

Each agency shall have the right to customize its individual system in any way it chooses, provided that such customization does not impair the operation of the total system. Such customization shall be the sole expense and responsibility of the agency which chooses the particular customization. The System Administrators shall have the authority to decide whether or not any action taken by an agency is an impairment to the system and may order the agency to follow the directive of the System Administrators.

XI. GOVERNING LAW

This agreement shall be governed by the laws of the State of Texas and shall be enforceable in any court of competent jurisdiction in Texas.

XII. SEVERABILITY:

In the event that one or more provisions of this agreement shall be held to be invalid, illegal, or unenforceable in any respect, such invalidity, illegality, or unenforceability shall not affect the other provisions, and the other provisions shall remain in full force and effect.

XIII. DISPUTES:

Any dispute among the parties, which cannot be resolved by the Systems Administrators, shall be submitted to the GRID Board for resolution. The Board shall investigate the dispute, allowing involved parties to explain their individual concerns, and shall determine the appropriate remedy. The Board's decision shall be final and binding on all parties.

Signed and sealed by the following units of government on the dates set out below:

CITY OF LA MARQUE, TEXAS

_____ _____

Charlene Warren, Interim City Manager Date

ATTEST:

_____

Robin Eldridge, City Clerk

CITY OF LEAGUE CITY, TEXAS

_____ _____

John Baumgartner, City Manager Date

ATTEST:

_____

Diana Stapp, City Secretary

APPROVED AS TO FORM

_____

Nghiem V. Doan, City Attorney

2018 GRID Consortium Estimated Cost Matrix

	CFS	Reports	Arrests	Accidents	CFS%	Reports %	Arrests %	Accidents %
League City	74,022	6,076	4,335	1,952	11.04%	12.72%	13.02%	16.81%
LaPorte	50,388	2,577	2,169	846	7.52%	5.39%	6.51%	7.28%
Friendswood	32,425	2,098	1,439	566	4.84%	4.39%	4.32%	4.87%
Webster	29,611	2,240	1,714	30	4.42%	4.69%	5.15%	0.26%
Deer Park	50,748	4,960	2,986	542	7.57%	10.38%	8.97%	4.67%
Alvin	35,196	3,117	2,019	755	5.25%	6.53%	6.06%	6.50%
Sugarland	77,877	4,014	2,177	2,181	11.62%	8.40%	6.54%	18.78%
Seabrook	13,489	643	914	0	2.01%	1.35%	2.75%	0.00%
Santa Fe	9,730	677	495	157	1.45%	1.42%	1.49%	1.35%
Kemah	6,518	321	475	145	0.97%	0.67%	1.43%	1.25%
Dickinson	17,013	1,412	1,469	345	2.54%	2.96%	4.41%	2.97%
Morgans Point	4,300	300	120	35	0.64%	0.63%	0.36%	0.30%
Jamaica Beach	14,249	84	15	8	2.13%	0.18%	0.05%	0.07%
LakeView	5,758	413	164	96	0.86%	0.86%	0.49%	0.83%
LaMarque	25,226	2,417	2,329	387	3.76%	5.06%	6.99%	3.33%
Texas City	87,000	6,800	4,300	1,200	12.98%	14.24%	12.91%	10.33%
Port of Houston	40,000	2,000	500	0	5.97%	4.19%	1.50%	0.00%
Galveston	90,976	7,205	5,512	2,274	13.57%	15.08%	16.55%	19.58%
Nassau Bay	5,758	413	164	96	0.86%	0.86%	0.49%	0.83%
	670,284	**47,767**	**33,296**	**11,615**	**100.00%**	**100.00%**	**100.00%**	**100.00%**

League City	86,385	11.32%
LaPorte	55,980	7.34%
Friendswood	36,528	4.79%
Webster	33,595	4.40%
Deer Park	59,236	7.76%
Alvin	41,087	5.39%

GRID CONSORTIUM USAGE TOTALS

Sugarland	86,249	11.30%
Seabrook	15,046	1.97%
Santa Fe	11,059	1.45%
Kemah	7,459	0.98%
Dickinson	20,239	2.65%
Morgans Point	4,755	0.62%
Jamaica Beach	14,356	1.88%
LakeView	6,431	0.84%
LaMarque	30,359	3.98%
Texas City	99,300	13.02%
Port of Houston	42,500	5.57%
Galveston	105,967	13.89%
Nassau Bay	6,431	0.84%
	762,962	**100.00%**

AGENCY RAW TOTALS			
CFS	**REPORTS**	**BOOKINGS**	**ACCIDENTS**
670,284	47,767	33,296	11,615

			A	B	C	**Subtotal yearly cost**
League City	11.32%	of	$10,421.99	$2,830.58	$9,623.97	**$22,876.54**
LaPorte	7.34%	of	$6,753.75	$1,834.30	$6,236.61	**$14,824.66**
Friendswood	4.79%	of	$4,406.95	$1,196.91	$4,069.51	**$9,673.37**
Webster	4.40%	of	$4,053.10	$1,100.81	$3,742.75	**$8,896.65**
Deer Park	7.76%	of	$7,146.57	$1,940.99	$6,599.36	**$15,686.92**
Alvin	5.39%	of	$4,956.97	$1,346.30	$4,577.42	**$10,880.69**
Sugarland	11.30%	of	$10,405.58	$2,826.12	$9,608.82	**$22,840.52**
Seabrook	1.97%	of	$1,815.24	$493.01	$1,676.24	**$3,984.49**
Santa Fe	1.45%	of	$1,334.22	$362.37	$1,232.06	**$2,928.65**
Kemah	0.98%	of	$899.90	$244.41	$830.99	**$1,975.30**
Dickinson	2.65%	of	$2,441.75	$663.17	$2,254.78	**$5,359.71**
Morgans Point	0.62%	of	$573.67	$155.81	$529.74	**$1,259.22**
Jamaica Beach	1.88%	of	$1,731.99	$470.40	$1,599.37	**$3,801.77**
LakeView	0.84%	of	$775.87	$210.72	$716.46	**$1,703.06**

LaMarque	3.98%	of	$3,662.69	$994.77	$3,382.23	**$8,039.69**
Texas City	13.02%	of	$11,980.13	$3,253.77	$11,062.81	**$26,296.70**
Port of Houston	5.57%	of	$5,127.45	$1,392.60	$4,734.84	**$11,254.88**
Galveston	13.89%	of	$12,784.47	$3,472.22	$11,805.56	**$28,062.26**
Nassau Bay	0.84%	of	$775.87	$210.72	$716.46	**$1,703.06**
		Total:	**$92,048.16**	**$25,000.00**	**$85,000.00**	**$202,048.16**

A - Sungard Yearly Maintenance for Software Packages/Interfaces for GRID	**$92,048.16**	A
B - Server maintenance, capital replacement, software & SOW's	**$25,000.00**	B
C - Grid Staffing Services - Mapping/Support/Management	**$85,000.00**	C
Total:	**$202,048.16**	

CITY COUNCIL AGENDA FORM

Meeting Date: November 12, 2018 Agenda item: **11a**
Prepared by: Chief Kirk Jackson Reviewed by: *Charlene Warren*
Department: Police Department

AGENDA ITEM DESCRIPTION: Discussion/possible action regarding award of RFP **#18-05** to A to Z Fence Company for the installation of a perimeter security fence for the police station in the amount of $61,945.00.

[X]

ATTACHMENTS FOR REFERENCE

1. Written proposal from A to Z Fence Company in response to RFP# 18-05.

STAFF BRIEFING:

- The City of La Marque Police Department desires to erect a perimeter fence around the rear, non-public, portion of the police department parking lot in order to prevent escapes from the property as well as preventing unauthorized persons from gaining access to the rear parking area.
- The project was initially budgeted using chain-link fencing materials and quotes for the project were received based on those specifications. However, a request from the La Marque EDC upgraded the project to more aesthetically-pleasing material.
- La Marque EDC has granted funding to improve the project in order to meet the downtown revitalization efforts for the "Renaissance District."

HISTORY: N/A

TARGET IMPLEMENTATION: November 13, 2018

SIGNIFICANT ACTION DATES:
10.5.2018 - Publication in the Galveston Daily News – 1st time
10.12.2018 - Publication in the Galveston Daily News- 2nd time
10.24.2018 - Requests for Proposal #18-05 opened

ACTION:

- [ ] Ordinance
- [ ] Resolution
- [ ] Special Presentation
- [ ] Proclamation
- [ ] Finance Report
- [ ] Public Hearing
- [x] Award of RFP
- [x] Mark if this item does not conflict with any Resolution, Ordinance or City Charter, policies, procedures

Cost Details:	
Budgeted	$18,750
Actual Bid	$61,945
Estimated Expenditure	**$61,945**
Acct. Name(s)	20 Year Life Assets
Line Items #	01-7020-05-00
Other Funding	$38,000 from EDC $5,195 from Fund 12

Rev. 09/24/2014

STAFF'S RECOMMENDATION: Motion to award RFP **#18-05** to A to Z Fence Company for the installation of a perimeter security fence for the police station in the amount of $61,945.00.

FISCAL IMPACT: The $18,750 will be supplemented by funding from the La Marque EDC in order to complete the project.

P.O. Box 775
La Marque, Texas 77568
Phone (409) 935-3033
Fax (409) 935-7476
azfence@sbcglobal.net

City of La Marque for the La Marque Police Station: RFP# 18-05

October 23, 2018

Clarification Page

Columns

Included in Quote; the 3 - 24" x 24" x 7' Stone Columns @ $2,600.00 each, if you require more or less Please Adjust Price by Adding or Subtracting Columns

Option #1

I added $2,000.00 for Lighting and Electrical along Fence on First Street but due to not having Specifications and/or Descriptions the Desired Lighting could Exceed the $2,000.00 in the Quote.
A to Z will be responsible for Contracting the Desired Lighting and Electrical work @ Plus10% Above Cost after Providing All Receipts to LMPD for that work.

P.O. Box 775
La Marque, Texas 77568
Phone (409) 935-3033 la
azfence@sbcglobal.net

Texas City – La Marque 2016 Business of the Year

October 23, 2018

The City of La Marque
Attn: City Clerk
1111 Bayou Road
La Marque, Texas 77568

Proposals: RFP #18-05

Work Type: "Installation of Security Fencing" for the La Marque Police Station
Job Location: La Marque Police Station, 431 Bayou Rd, La Marque, TX 77568

We hereby submit specifications and estimates to furnish all labor and materials to perform the following scope of work.

Bid #1

Item #1 – Install 308'of 8' Trex Fencing - Color: Wind Chester Gary
Item #2 – Install 1 - 48" x 8' Walk Gate
Item #3 – Install 223'of 7' Ameristar Spear Top Fencing
Item #4 – Install 1 - 12' x 7' Ameristar Slide Gate
Item #5 – Install 1 - 20' x 7' Ameristar Slide Gate
Item #6 – Install 1 - 14' x 8' Ameristar Slide Gate
Item #7 – Install 2 Slide Gate Operators with Battery Back-up
Item #8 – Install 3 - 24" x 24" x 7' Square Stone Columns Located on First Street Side

Total Bid $60,895.00
Sales Tax and Permit Not Included

Clarification Page is Included in Quote for Option #1

Option #1
Due to not enough detailed Information given was unable to Quote so $2,000.00 was Added for Lighting. If $2,000.00 doesn't Cover the Desired Lighting, A to Z will Contract the Lighting and Electrical work to be done by a Licensed Contractor @ Plus 10% above cost after providing all receipts.

Option #2
Item #1 – Install Large **LMPD** Letters across Front of Two Slide Gates

Total Bid $1,050.00
Sales Tax and Permit Not Included

City of La Marque for the La Marque Police Station: RFP# 18-05
A to Z Fence

Note: The customer must contract and provide all Electrical work for Gates and/or Operators and Supply Conduct to Run Wiring into Building for Open-Close Stop Button.
A to Z Fence Company does not provide that type of service.
All quotes are for Materials and/or Labor to Install quoted materials Only.

7' Ameristar Fence & Gate
8' Ameristar Gate
8' Trex Fence

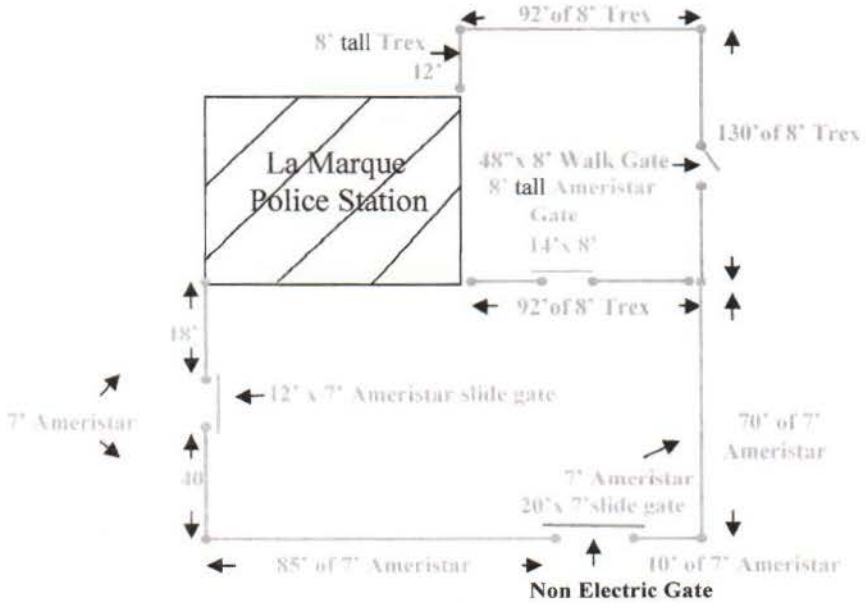

-Quote Good for 15 Days-

Contract Conditions: The above bid, when accepted by this Company, becomes a contract. All Invoices shall be paid within Invoice Terms after completion of the project. A 10% will be added to any remaining amount after due date.
If payment is not made as per terms of this contract, the property owner expressly gives this company the right to come on his property to repossess all materials used on this job without recourse, and the property owner further agrees to accept all responsibility for any damage caused by this repossession. Property owner is solely responsible for locating, staking and clearing fence lines. Customer also agrees that this Company will not be held responsible or liable for any damage of any nature to underground obstructions, and understands that there is no warranty on wood fence materials. More or less material other than amount contracted for and digging problems will be debited or credited at current rate. MasterCard, Visa and Bank Debit Card are accepted with a transaction fee of 3% of total invoice. Property owner is solely responsible for any permit fees if required.

Customer Acceptance _____ Date _____

Attachment C

Pricing Form

Project Cost

Materials Cost:	$ 40,800.00
Labor Cost:	$ 20,095.00
Total:	$ 60,895.00

Option#1 Attached: Clarification Page

Materials Cost:	$
Labor Cost:	$
Total:	$

Note: Due to many Options and Specificationfor Lightning $2,000.00 was included in Quote

Option#2 Attached: Clarification Page

Materials Cost:	$ 750.00
Labor Cost:	$ 300.00
Total:	$ 1,050.00

Signatures: By signing this document, I agree that I have received and reviewed all specifications, plans, and addenda and considered all costs associated with calculating the total bid price.

Offeror: B.L. Alexander Enterprises, Inc. dba A to Z Fence

(print or type full name of authorized signer)

**By: Perry L Alexander Owner/President October 23, 2018

(signature) (date)

CITY COUNCIL AGENDA FORM

Meeting Date: November 12, 2018 Agenda item: **11b**
Prepared by: Charlene Warren Reviewed by: *Charlene Warren*
Department: Administration

AGENDA ITEM DESCRIPTION: Discussion/possible action regarding award of Bid **LM #09-19** to Beach Town Lawn Service for Lawn Care Maintenance of City Facilities and Parks in the amount of $70,000.00.

X

ATTACHMENTS FOR REFERENCE

1. Bid Tab

STAFF BRIEFING:

- The City of La Marque desires to project a manicured appearance at its facilities and parks.
- Our public facilities are often the first impression citizens receive of our city.
- Our parks are essential to attract families to our City and are one of the few amenities that make us a desirable place to reside.
- Finance Director has reviewed and provided guidance for the City's bid.
- There were 194 bids solicited through the city's website, 47 bids solicited through Texas Bid System, as well as a legal ad placed in the Galveston County Daily Newspaper that ran twice in a fifteen (15) day period (10/15/2018 and 10/22/2018).
- A notice was posted on the City of La Marque web site.
- Six (6) interested vendors attended the pre-bid conference on October 25, 2018.
- Six (6) bids were submitted and of those, five (5) qualified bids were received.
- Please see the enclosed bid tabulation for bid results.
- The bid amounts are based on specifications supplied by the City of La Marque.
- Staff recommends awarding the bid for LM #09-19 Lawn Care Maintenance of City Facilities and Parks to Beach Town Lawn Service, the lowest qualified bidder meeting specifications.

HISTORY:

- Historically (at least 10 years ago), City Public Works had a fully staffed and equipped Parks Division.
- Through attrition, the Division devolved to a crew of 2-3 employees.

TARGET IMPLEMENTATION: November 13, 2018

SIGNIFICANT ACTION DATES:

Legal Ad placed October 15, 2018
Legal Ad placed October 22, 2018
Bids opened October 29, 2018

CITY COUNCIL AGENDA FORM

ACTION:

- ☐ Ordinance
- ☐ Resolution
- ☐ Special Presentation
- ☐ Proclamation
- ☐ Finance Report
- ☐ Public Hearing
- ☒ Award of Bid
- ☒ Mark if this item does not conflict with any Resolution, Ordinance or City Charter, policies, procedures

Cost Details:	
Budgeted	$81,300.00
Actual Bid	$70,000.00
Estimated Expenditure	**$70,000.00**
Acct. Name(s)	Repair & Maintenance
Line Items #	01-3020-12-00-LNDSCP-20
Other Funding	$0.00

STAFF'S RECOMMENDATION: Motion to award Bid **#LM 09-19** to Beach Town Lawn Service for Lawn Care Maintenance of City Facilities and Parks in the amount of $70,000.00.

FISCAL IMPACT: Budgeted line item

LM 09-19 Lawn Maintenance
Bid Tab

			VENDORS			
			Cornerstone	Parrish & Parrish	Hydrozone	Horticare
		BID BOND	Yes	Yes	Yes	No
		INSURANCE	Yes	Yes	Yes	Yes
		REGISTERED	Yes	Yes	No	Yes
FACILITIES AND PARKS	1	Bayou City Park	$700.00	$700.00	$2,275.00	$2,380.00
	2	Bird Sanctuary	$700.00	$700.00	$2,275.00	$1,680.00
	3	Mac McGaffey Highland Bayou Park	$49,000.00	$17,500.00	$12,425.00	$131,950.00
	4	Ballfield, Mac McGaffey Highland Bayou Park	$5,600.00	$875.00	$2,275.00	$5,425.00
	5	Jaycee Park	$9,800.00	$3,325.00	$9,100.00	$4,550.00
	6	Lagana Park	$9,800.00	$3,325.00	$9,100.00	$12,600.00
	7	Martin Luther King, Jr. Memorial Park	$8,400.00	$3,325.00	$9,100.00	$3,430.00
	8	Mahan Park	$28,000.00	$13,125.00	$9,100.00	$38,500.00
	9	Walter Feigle Park	$2,800.00	$1,575.00	$9,100.00	$2,380.00
	10	Westlawn Park	$7,000.00	$3,325.00	$9,100.00	$4,550.00
	11	Welcome Sign	$1,400.00	$700.00	$2,275.00	$3,325.00
	12	La Marque Cemetery	$16,800.00	$12,250.00	$9,100.00	$21,700.00
	13	City Hall	$1,400.00	$1,400.00	$4,550.00	$1,925.00
	14	Fire Department	$980.00	$2,100.00	$2,275.00	$1,925.00
	15	Library	$1,400.00	$2,100.00	$2,275.00	$2,380.00
	16	Police Department	$2,100.00	$2,275.00	$4,550.00	$1,925.00
	17	Firemen's Hall	$1,400.00	$1,050.00	$2,275.00	$1,680.00
	18	LMEDC 1130 First St.	$2,100.00	$1,575.00	$2,275.00	$1,750.00
	19	LMEDC 401 Laurel	$1,400.00	$1,050.00	$2,275.00	$1,750.00
	20	LMEDC 418 Laurel	$1,400.00	$875.00	$2,275.00	$1,750.00
		TOTAL	$152,180.00	$73,150.00	$107,975.00	$247,555.00

LM 09-19 Lawn Maintenance
Bid Tab

			VENDORS			
			Beach Town	One Great Lawn	X	X
		BID BOND	Yes	Yes	X	X
		INSURANCE	Yes	Yes	X	X
		REGISTERED	Yes	Yes	X	X
					X	X
FACILITIES AND PARKS	1	Bayou City Park	$700.00	$1,785.00	X	X
	2	Bird Sanctuary	$700.00	$1,925.00	X	X
	3	Mac McGaffey Highland Bayou Park	$18,375.00	$79,450.00	X	X
	4	Ballfield, Mac McGaffey Highland Bayou Park	$700.00	$6,825.00	X	X
	5	Jaycee Park	$3,325.00	$6,965.00	X	X
	6	Lagana Park	$3,325.00	$14,420.00	X	X
	7	Martin Luther King, Jr. Memorial Park	$3,325.00	$4,025.00	X	X
	8	Mahan Park	$10,500.00	$43,365.00	X	X
	9	Walter Feigle Park	$1,400.00	$3,115.00	X	X
	10	Westlawn Park	$3,325.00	$6,720.00	X	X
	11	Welcome Sign	$700.00	$2,730.00	X	X
	12	La Marque Cemetery	$12,250.00	$21,210.00	X	X
	13	City Hall	$1,400.00	$1,505.00	X	X
	14	Fire Department	$2,100.00	$2,485.00	X	X
	15	Library	$2,100.00	$2,625.00	X	X
	16	Police Department	$2,100.00	$1,960.00	X	X
	17	Firemen's Hall	$1,400.00	$2,485.00	X	X
	18	LMEDC 1130 First St.	$1,050.00	$3,885.00	X	X
	19	LMEDC 401 Laurel	$700.00	$4,515.00	X	X
	20	LMEDC 418 Laurel	$525.00	$2,170.00	X	X
		TOTAL	$70,000.00	$214,165.00	X	X

CITY COUNCIL AGENDA FORM

Meeting Date: November 12, 2018 Agenda item: **11c**
Prepared by: Venisha Henderson Reviewed by: *Charlene Warren*
Department: Public Services

AGENDA ITEM DESCRIPTION: Discussion/possible action regarding award of Bid **LM #06-19** to Sprint Waste Services, LP. for Sludge Removal in the amount of $124,500.00.

X

ATTACHMENTS FOR REFERENCE
1. Bid Tab

STAFF BRIEFING

- Staff recommends accepting the bid submitted by Sprint Waste Services LP. as the only qualified bidder meeting all specifications.
- Sprint Waste Services, LP processes and methodology are preferable as they are more environmentally sound and efficient.
- The selected vendor provides additional services such as tank cleaning after sludge removal.
- All bid amounts are based on estimated quantites supplied by the City of La Marque.
- There were thirteen (13) bids solicited as well as a legal ad placed in the Galveston County Daily Newspaper that ran twice in a fifteen (15) day period.
- The bid was placed on the City's website and Bidnet.
- One (1) qualified bid was received.
- Please see the enclosed bid tabulation for bid results.

HISTORY:

- The sludge removal process is performed approximately every six weeks.
- The independent contractor mobilizes a belt filter press and a fleet of 30-yard end dump trucks.
- The filter press removes and seperates liquids from solid materials from four plant process digesters.
- The separated cake is deposited in the dump truck trailers and the material is hauled to the landfill for disposal.
- This whole process takes approximately two weeks.

TARGET IMPLEMENTATION: November 30, 2018

SIGNIFICANT ACTION DATES:
11.30. 2018 - Contracts need to be in place and PO's approved prior to this date.

CITY COUNCIL AGENDA FORM

ACTION:

- ☐ Ordinance
- ☐ Resolution
- ☐ Special Presentation
- ☐ Proclamation
- ☐ Finance Report
- ☐ Public Hearing
- ☒ Other – Award of Bid
- ☒ Mark if this item does not conflict with any Resolution, Ordinance or City Charter, policies, procedures

Cost Details:	
Budgeted	120,000.00
Actual Bid	124,500.00
Estimated Expenditure	**90,000**
Acct. Name(s)	Sludge Removal
Line Item #	02-3010-24-00
Other Funding	

STAFF'S RECOMMENDATION: Motion to award Bid **LM #06-19** to Sprint Waste Services, LP. for Sludge Removal in the amount of $124,500.00.

FISCAL IMPACT: The sludge removal process is an annual reoccurring cost that can change based on inflation and other factors. Estimated expenditure this fiscal year is $90,000.00 from Water/Watewater Operation-Sewage Treatment Plant account.

BID TABULATION
LM 06-19
SLUDGE MANAGEMENT

Sprint Waste Services, LP

ESTIMATED AMOUNTS	DESCRIPTION	UNIT PRICE PER DRY TON	TOTAL BASED ON ESTIMATED AMOUNTS
250 Dry Tons	Aerobic non-hazardous municipal sludge (removal and disposal) as per specifications	$ 498.00	$ 124,500.00

CITY COUNCIL AGENDA FORM

Meeting Date: November 12, 2018 Agenda item: **11d**
Prepared by: Venisha Henderson Reviewed by: *Charlene Warren*
Department: Public Services

AGENDA ITEM DESCRIPTION: Discussion/possible action regarding award of Bid **LM #04-19** to Vulcan Materials for limestone, not to exceed $39,144.00

X

ATTACHMENTS FOR REFERENCE

1. **Bid Tab**

STAFF BRIEFING:

- Staff recommends accepting the bid submitted by Vulcan Materials as the only qualified bidder meeting all specifications.
- All bid amounts are based on estimated quantities supplied by the City of La Marque.
- There were eight (8) bids solicited, as well as a legal ad placed in the Galveston County Daily News that ran twice ina fifteen (15) day period.
- Of these, one (1) qualified bid was received.
- Please see the attached bid tabulation for bid results.
- There is $35,000 budgeted in the CIP fund for street projects.

HISTORY:

- The limestone product bid is for the base repair and maintenance of asphalt streets due to water leaks, road failures, and driveway approaches.
- Additionally, this material is utilized on gravel roads throughout the City.

TARGET IMPLEMENTATION: November 30, 2018

SIGNIFICANT ACTION DATES:

11.30.2018 – Contracts need to be in place and PO's approved prior to this date.

ACTION:

☐ Ordinance ☐ Resolution
☐ Special Presentation ☐ Proclamation
☐ Finance Report ☐ Public Hearing
☒ Other – Award of Bid
☒ Mark if this item does not conflict with any Resolution, Ordinance or City Charter, policies, procedures

Cost Details:	
Budgeted	35,000.00
Actual Bid	39,144.00
Estimated Expenditure	**25,000.00**
Acct. Name(s)	CIP Fund
Line Items #	65-7001-12-00-STREET
Other Funding	

CITY COUNCIL AGENDA FORM

STAFF'S RECOMMENDATION: Motion to award Bid **LM #04-19** to Vulcan Materials for limestone, not to exceed $39,144.00

FISCAL IMPACT: Estimated expenditure this fiscal year of $25,000 from Capital Improvement Fund – Streets.

BID TAB
LM 04-19
LIMESTONE

Estimated Quantity	Description	Unit Price	Total (Based on Est. Quantity)
1,200 Tons	Limestone flexible base material as per specifications	$32.62/ton	$39,144.00
	TOTAL COST		**$39,144.00**