**CITY OF LA MARQUE**
**CITY COUNCIL**
**REGULAR AGENDA**
**of**
**March 10, 2025**

Notice is hereby given that the City Council of the City of La Marque, Texas will conduct a **Regular Meeting** on **March 10, 2025**, beginning at **6:00 PM** in the **Council Chambers** at **1109-B Bayou Road La Marque, Texas as well as via video-conference hosted through Zoom (councilzoom.cityoflamarque.org)**. In accordance with Section 551.127(b) of the Texas Local Government Code the presiding officer and a quorum of the La Marque City Council intend to be and will be physically present at 1109-B Bayou Road, La Marque, Texas. This location will be open to the public and the meeting will be broadcast at this location, on Channel 16, and via YouTube (https://www.youtube.com/watch?v=L6G8ypjyEDo).

The Council will meet for the purpose of considering the following agenda:

1. CALL MEETING TO ORDER

2. ROLL CALL

3. INVOCATION AND PLEDGE OF ALLEGIANCE

4. AWARDS AND RECOGNITIONS

   4.I. Proclamation - Fix A Leak Week

   4.II. Proclamation - Autoimmune Awareness Month

5. CITIZENS PARTICIPATION
   **LIMITED TO THREE MINUTES PER PERSON**

   Comments from the public will be heard at this time. Any person with city-related business who has signed up may speak to Council (limited to three (3) minutes). If wishing to speak give the Mayor or presiding officer your full legal name and the item you wish to speak about. In compliance with Texas Open Meeting Act, the City may not deliberate on comments. Personal attacks will not be allowed, and personnel matters should be addressed to the City Manager during normal business hours. *Press *6 to mute or unmute if you are participating by telephone, press the unmute button if attending via zoom on a smartphone, tablet or computer, or stand if* attending in person, and the mayor will call on you in turn.

6. PRESENTATIONS

6.I. Axon Presentation

7. PUBLIC HEARINGS
*Conduct Public Hearing to hear public input on:*

7.I. Ordinance No. O-2025-0003
Creating a Heavy Industrial Zoning District

7.II. Ordinance No. O-2025-0004
Approving the rezoning of property owned by Cotter and Alexander, LLC from Residential (R-1) and Commercial (C-1) to Light Industrial (L-1)

7.III. Ordinance No. O-2025-0005
Amending the Code of Ordinances of City of La Marque, Texas by amending Chapter 42, "Impact Fees"; Providing rules and regulations governing the same within the city; Making other provisions related to the subject and providing an effective date

8. OLD BUSINESS
*Items presented to the Council for discussion and possible action:*

8.I. Ordinance No. O-2025-0003
Creating a Heavy Industrial Zoning District - *Legal* **THIS IS THE SECOND AND FINAL READING**

8.II. Ordinance No. O-2025-0004
Approving the rezoning of property owned by Cotter and Alexander, LLC from Residential (R-1) and Commercial (C-1) to Light Industrial (L-1) - *Development Services* **THIS IS THE SECOND AND FINAL READING**

8.III. City Attorney Services
Setting a limit on the number of hours an elected official can access the city attorney's services without council approval - *Legal/Finance*

8.IV. Boards and Commissions
Appointing, reappointing, and/or removing members of boards, commissions, and committees - *City Clerk*

9. NEW BUSINESS
*Items presented to the Council for discussion and possible action:*

9.I. Ordinance No. O-2025-0005
Amending the Code of Ordinances of City of La Marque, Texas by amending Chapter 42, "Impact Fees"; Providing rules and regulations governing the same within the city; Making other provisions related to the subject and providing an effective date - *Engineering* **THIS IS THE FIRST READING**

9.II. Resolution No. R-2025-0016
Submitting an application for the No-Match Lonestar Grant - *Police/Fire*

9.III. ARPA #2647 Bid Award for LM 24-16
Approving the purchase DuraPatcher P2 Trailer from Monmouth Solutions, Inc. utilizing allocated ARPA Funds in the amount of $144,499.00 - *Public Works*

9.IV. ARPA #2232 Bid Award for LM 24-17
Approving the purchase of two (2) Caterpillar 303.5 Mini Excavators from Mustang CAT utilizing allocated ARPA Funds in the amount of $125,266.88 - *Public Works*

9.V. Wisteria Drainage Improvement - Award Bid
Awarding a contract for the Wisteria Drainage Improvements Project to Mar-Con Services, LLC for the amount of $535,088.50 - *Public Works*

9.VI. Purchase of Cameras
Approving the purchase of Body-Worn Cameras (BWC's) and In-Car Cameras with Axon Enterprise, Inc. in an amount not to exceed $620,000.00 - *Police*

9.VII. Texas Police Chiefs Association Best Practices Accreditation Program
Approving the agreement between the La Marque Police Department's matriculation into the Texas Police Chiefs Association (TPCA) Best Practices Accreditation Program - *Police*

9.VIII. Special Events Committee
Determining a structure for a Special Events Committee - *Mayor*

9.IX. Grant Administrator Purchase Orders

10. CITY MANAGER REPORT
*A submitted report to update Council and Community on the standard operations of the City,* report can be acknowledged as whole or discussed at the pleasure of Council.

10.I. February 2025 GLO Public Infrastructure Project Update

10.II. La Marque Public Library January Statistics

10.III. January 2025 City Council Monthly Finance Report

10.IV. Items for the Good of the Order

11. EXECUTIVE SESSION
*The City Council for the City of La Marque, Texas reserves the right to adjourn into executive session at any time during this meeting to discuss any of the matters listed above, as authorized by the Texas Government Code Section 551.071 (Consultation with Attorney), 551.072(Deliberations about Real Property), 551.073 (Deliberations about Gifts and Donations), 551.074 (Personnel Matters), 551.076 (Deliberations about Security Devices), and 551.087 (Economic Development)*

11.I. Section 551.074 (Personnel Matter)
To deliberate the appointment, employment, evaluation, reassignment, duties, discipline, or dismissal of a public officer or employee - City Attorney

11.II. Section 551.074 (Personnel Matter)
For the purpose of hearing a complaint or charge against an officer or employee: Councilmember District C

12. ACTIONS TAKEN FROM EXECUTIVE SESSION

12.I. Section 551.074 (Personnel Matter)
To deliberate the appointment, employment, evaluation, reassignment, duties, discipline, or dismissal of a public officer or employee - City Attorney

12.II. Section 551.074 (Personnel Matter)
For the purpose of hearing a complaint or charge against an officer or employee: Councilmember District C

13. REQUESTS AND ANNOUNCEMENTS
*The City Council for the City of La Marque, Texas reserves the right to adjourn into executive session at any time during this meeting to discuss any of the matters listed above, as authorized by the Texas Government Code Section 551.071 (Consultation with Attorney), 551.072(Deliberations about Real Property), 551.073 (Deliberations about Gifts and Donations), 551.074 (Personnel Matters), 551.076 (Deliberations about Security Devices), and 551.087 (Economic Development)*

14. ADJOURNMENT

**CERTIFICATION:**

I hereby certify that the above notice of meeting was posted at 1109-B Bayou Road, La Marque, Texas on March 7, 2025 by 3:00 p.m.

_____
Kierra K. Nance, TRMC
City Clerk

## Office of the Mayor
## City of La Marque

# *PROCLAMATION*

**WHEREAS**, water is a precious resource that is essential for life and the well-being of all living things; and

**WHEREAS,** the average household loses approximately 10,000 gallons of water each year due to household leaks, which can increase water bills and waste valuable water resources; and

**WHEREAS,** small leaks can often go unnoticed but can cause significant waste if left unaddressed, contributing to water shortages and increased environmental stress; and

**WHEREAS**, Fix A Leak Week encourages homeowners, businesses, and communities to take the time to check their plumbing fixtures, irrigation systems, and appliances for leaks, as well as to repair or replace faulty parts to conserve water; and

**WHEREAS**, the benefits of repairing leaks extend to conserving the energy needed to treat and transport water, thus helping reduce the carbon footprint associated with water usage; and

**NOW THEREFORE,** we the Mayor and City Council, urge all citizens and businesses to join and hereby proclaim the week of March 17 – March 21, 2025, as:

# "FIX A LEAK WEEK"

in La Marque and encourage all citizens to consider the value of water in work to ensure it is used wisely, efficiently, and sustainably; and

In testimony whereof, witness my hand and the Seal of the City of La Marque, this 7th day of March 2025.

_____

Keith Bell, Mayor

**Office of the Mayor**
**for the City of La Marque**

# PROCLAMATION

**WHEREAS** researchers have identified the category of autoimmune diseases includes more than 100 diseases that are chronic and in many cases debilitating—with no known cures; and

**WHEREAS**, autoimmune diseases can affect any part of the body, including the blood, blood vessels, muscles, nervous system, gastrointestinal tract, endocrine glands, and multiple-organ systems, and can be life-threatening; and

**WHEREAS**, the family of autoimmune diseases is under-recognized, and poses a major health care challenge to the United States; and

**WHEREAS** the National Institutes of Health (NIH) estimates that autoimmune diseases afflict up to 50,000,000 people in the United States, 80 percent of the people affected are women, and the prevalence of autoimmune diseases is rising; and

**WHEREAS**, tests for most autoimmune diseases are not standardized, making autoimmune diseases very difficult to diagnose and a study by the Autoimmune Association revealed that it takes the average patient with an autoimmune disease more than 4.5 years, to get a correct diagnosis; and

**WHEREAS**, designating March as "Autoimmune Awareness Month" would help educate the public about autoimmune diseases and the need for research funding, accurate diagnosis, and effective treatments; and

**NOW, THEREFORE**, we the Mayor and City Council by virtue of our authority vested by the City of La Marque, Texas do hereby designate the month of March as:

## "AUTOIMMUNE AWARENESS MONTH"

in the City of La Marque and do hereby support the efforts of health care providers and education organizations to increase awareness of the causes of, and treatments for, autoimmune diseases.

In testimony whereof, witness my hand and the Seal of the City of La Marque, this the 7th day of March 2025.

_____
Keith Bell, Mayor

# 5-YEAR QUOTE SUMMARY

BODY CAMERA UNLIMITED WITH AXON FLEET 3 FOR
LA MARQUE POLICE DEPT. - TX

Prepared By: Brayden Herrera, Account Executive
Email: bherrera@axon.com
Phone: 480.666.9781
17800 North 85th Street
Scottsdale, AZ 85255

# EXECUTIVE OVERVIEW

With Axon's Body Camera Unlimited with Axon Fleet 3 bundle, La Marque Police Dept. - TX can gain access to an ecosystem of connected hardware and software. The solutions included in the Body Camera Unlimited with Axon Fleet 3 bundle were designed to integrate with one another and intentionally built to help improve upon day-to-day law enforcement activities. By bundling these solutions into one cost-effective package, La Marque Police Dept. - TX can begin leveraging all of the necessary tools to improve efficiencies across your agency and keep your officers and communities safe.

By investing in our solutions as a bundle—versus a la carte purchases La Marque Police Dept. - TX will receive an overall savings reflected in the bundled discounting throughout a 5-year contract.

For your convenience, we have also included a link to our Master Services and Purchasing Agreement for you to review.

If you have any questions regarding our solutions or pricing, please contact:

## POINT OF CONTACT

Brayden Herrera

Account Executive

480.666.9781

bherrera@axon.com

Please note that to sign a deal with Axon Enterprise, Inc., all accounts must be current, and any outstanding invoices must be paid.

We look forward to working with La Marque Police Dept. - TX to help bolster your current workflows by joining our technology—designed specifically for law enforcement—with your personnel.

# STORAGE OVERVIEW

With the collection of La Marque Police Dept. - TX's digital evidence on the rise, having access to a highly scalable cloud-storage solution capable of housing both Axon and non-Axon data is of the utmost importance. Especially when you need a reliable storage array to quickly access, manage, and share your data. With our proposed solution, Axon is offering La Marque Police Dept. - TX the following storage amounts to ensure your data is available all from one place.

| AVAILABLE STORAGE BREAKDOWN | |
|---|---|
| LICENSE TIER | STORAGE AMOUNT |
| Axon Body Camera Data Storage | Unlimited |
| Axon Capture Storage | Unlimited |
| Axon Fleet Evidence Storage | Unlimited |

# SOLUTION DELIVERABLES

Axon's Body Camera Unlimited with Axon Fleet 3 bundles hardware, software, accessories, training programs, 24/7 customer support, equipment refreshes, and warranties together to help equip your officers with the solutions they need. Whether easing your administrative burden back at the station or protecting your officers in the field, La Marque Police Dept. - TX will receive the following program features and products to help you meet your goals.

## HARDWARE COMPONENTS

### BODY-WORN CAMERAS

- 34 Axon Body-Worn Cameras
- 5 Axon Body-Worn Cameras Docks, 5 Wall Mounts, and Accessories
- 34 Axon Body-Worn Camera Mount per Camera

### IN-CAR CAMERA SYSTEMS

- 27 Axon Fleet 3 Camera Kits
- 27 Cradlepoint IBR900 Routers
- 27 Axon Signal Units
- 27 Airgain Antennas
- 27 Axon Fleet SIM Cards

### AUTOMATIC SENSORS

- Axon Fleet 3 Signal Kits

## SOFTWARE COMPONENTS

### BODY-WORN CAMERAS

- 34 Axon Fusus GPS and Streaming Licenses

### IN-CAR CAMERA SYSTEMS

- 27 Axon Fleet 3 In-Car System Licenses
- 27 Axon Fleet 3 Unlimited Storage Licenses

### DEMS

- 34 Axon Evidence Pro Licenses
- 34 Axon Evidence Unlimited Storage Licenses (Axon Data Only)

## TRAINING AND SUPPORT

- Axon Full-Service Deployment
- In-Car Camera System Vehicle Installations

## WARRANTIES AND REFRESHES

- Five-Year Body-Worn Camera and Dock Warranties
- Body-Worn Camera and Dock Refreshes

# DETAILED SOLUTION OVERVIEW

The solutions that make up our comprehensive Body Camera Unlimited with Axon Fleet 3 offering include:

- AXON BODY 4 W/ AXON Fusus Live Streaming
- AXON EVIDENCE W/ UNLIMITED STORAGE

## BODY CAMERA UNLIMITED WITH AXON FLEET 3

### AXON BODY 4

The Axon Body 4 camera is designed to capture clear admissible video and audio evidence when an officer is in the field. The camera has four configurable resolutions from 480p to 1440p and leverages low-light and clear frame technology to capture high-quality video evidence in a variety of environments. Four-built in microphones, strategically placed inside the camera, leverage audio algorithms and onboard audio processing to capture high-quality audio recordings. When combined, all of these elements help officers capture truth in the moment and maintain transparency in the field.




With Axon Body 4, officers will be connected like never before, with two of our newest features: Watch Me notifications and bi-directional communication. Each feature will unlock new workflows when responding to a call.

- WATCH ME BUTTON that allows officers to send a notification to livestream viewers or mobile users to request a second set of eyes when needed. By doing so, livestream viewers will be able to take quick action on opening a livestream and can begin bi-directional communication with an officer.
- BI-DIRECTIONAL COMMUNICATION gives officers the ability to communicate hands-free with livestream viewers without tying up the radio, allowing them to open additional channels of communication with dispatchers, supervisors, translators, mental health professionals, and more.

### AXON BODY 4 IN THE FIELD

Officers in the field have complete control over their Axon Body 4 camera through seven easily accessible buttons strategically placed on the device. These buttons allow officers to start and stop recordings, manage volume levels, activate and deactivate operation modes, access camera information, and power down the device. Additionally, the camera has two programmable buttons that an agency can set to determine device behavior, thus making the most important camera actions easier to remember and access. This includes programmable camera features like Stealth mode, Audio Mute, Photo Marker, and the newly built Watch Me feature that allows officers to request an extra set of eyes via Axon Respond's livestreaming capabilities.

An officer can also easily and quickly view their camera's status via LED lights on the front and top of the camera, as well as from the Camera. For example, when the camera is recording, both the LED lights on the front of the camera and near the Camera Display will blink red. The camera also uses audio and haptic feedback in unison with visual feedback to help remind officers of the current state of the camera. This is useful in situations when officers are multi-tasking and need to quickly check the status of the camera without losing focus on the task at hand.

### / ADDITIONAL CAMERA FEATURES AND BENEFITS

- A DURABLE DESIGN that has been tested to meet/pass the Ingress Protection Rating, MIL-STD Defense, and Impact Certified standards, and can withstand impacts and operate in the harshest environments.
- AES-256-XTS FULL-DISK ENCRYPTION that protects evidence from manipulation while on the device.
- A LONG-LASTING BATTERY that is capable of providing approximately 13 hours of battery life under normal usage.
- A LARGE INTERNAL STORAGE CAPACITY of 128 GB to house captured video files.
- AN INTEGRATED AND EASY-TO-USE MOUNTING SYSTEM that allows officers to quickly mount their cameras to various locations on the body and across different uniform types and equipment, such as helmets and belts.
- EMBEDDED REAL-TIME AWARENESS TECHNOLOGY via Axon Respond, which allows the camera to send notifications and alerts, GPS and Wi-Fi location information, and a secure livestream feed over an LTE connection to Axon Evidence or a mobile application.
- INTEGRATED AXON SIGNAL TECHNOLOG
- A CONFIGURABLE PRE-EVENT BUFFER that can capture up to two minutes of video before the camera is actively recording.
- AN IN-FIELD EVIDENCE OFFLOAD OPTION that allows officers to send individual pieces of evidence directly from the camera to Axon Evidence.

## AXON BODY 4 AT THE STATION

Once back at the station at the end of a shift, officers can begin charging the camera, offloading evidence to Axon Evidence, and updating the camera's settings and operating system by simply plugging the Axon Body 4 camera into an Axon docking station. Whether the docks are placed on a table or mounted to a wall, officers can insert their cameras into any bay and end their shift with confidence, knowing their evidence will be securely offloaded, and the camera will be fully charged and have the necessary storage available to capture critical events as they unfold during their next shift.

### / REAL-TIME SITUATIONAL AWARENESS

Axon Body 4's integration with the Axon Ecosystem enables dispatch and command staff to gain real-time situational awareness of events in the field, through Axon Respond. Axon Respond enables remote personnel to quickly gain insight into a call-for-service or an officer's whereabouts. By simply signing into Axon Evidence or the Axon Respond mobile application, the personnel can open up the Axon Respond Map and access livestreams from active cameras, view location data as cameras move, and receive live alerts and

notifications. This includes Watch Me notifications sent from an officer's body-worn camera, which will allow dispatch or command staff to quickly access a livestream and begin bi-directional communication with an officer in need, in real-time, through Axon Respond.

These capabilities make it possible for those not on the scene to gather better intel and help officers in the field as situations change. Whether checking in on a responding officer or sharing tactical advice during a critical event, Axon Respond gives your agency access to information in the moment.

# AXON EVIDENCE

Axon Evidence is a scalable, cloud-based DEMS, which stores all digital evidence in a centralized, secure system. Axon Evidence integrates with the entire Axon Ecosystem of devices and applications, so your personnel can use its suite of features and efficient workflows to easily store, organize, and view evidence.

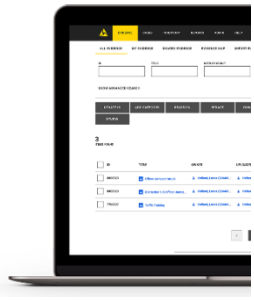

On top of that, Axon Evidence includes easy-to-use case-building tools and sharing workflows that allow users to build cases out of the evidence stored in the system. Once built, these cases can then be shared across your agency and with prosecuting partners in other agencies and jurisdictions.

## AXON EVIDENCE AT THE STATION

Personnel in a variety of roles can use Axon Evidence as the centralized system for uploading, storing, managing, searching, and organizing evidence—both captured via devices in the Axon Ecosystem and gathered from other, third-party sources.

Each user of Axon Evidence has their actions and capabilities within the system determined by role-based access permissions within the system.

These permissions are reflected within the system's dynamic user interface. For example, an Admin user will most likely have access to more tools and actions than that of a Basic user. Depending on those permissions, a user's experience in the system will vary. Providing a specific user with only the actions necessary to complete their duties when working within Axon Evidence creates a cleaner workspace with fewer distractions. No more mouse clicks that trigger unwanted actions or navigating through hundreds of unnecessary evidence files.

### / SEARCHING AND MANAGING EVIDENCE

The search functionality in Axon Evidence is designed to reduce the time it takes to locate an evidence file. The search interface offers an intuitive design that allows users to quickly navigate the search fields and filters to find exactly what they are looking for.

Axon Evidence also supports bulk action capabilities that can save users time when managing the system and their evidence. For example, instead of going into the video player interface to perform actions on an individual video, Axon Evidence supports bulk actions that can be performed on one or many selected videos based on search results, which can save time when managing multiple pieces of evidence.

### / WORKING WITH EVIDENCE

While working with evidence, users will have the ability to review and playback video and audio with our built-in media player. With basic controls that allow a user to play, stop, rewind, fast forward, and control the speed at which evidence files are played, users can quickly and thoroughly review their evidence.

While reviewing evidence from the View Evidence page, your users can also:

- CREATE CLIPS AND MARKERS to focus on or separate certain parts of a video
- CREATE REDACTIONS
- VIEW METADATA OVERLAYS that display important information such as the time and date
- ADD METADATA, TAGS, NOTES, AND CATEGORIES to the evidence file
- SHARE EVIDENCE FILES with other users or external partners
- ACCESS AND DOWNLOAD THE AUDIT TRAIL to review actions taken on the evidence
- VIEW LOCATION DATA

### / CONTROLLING ACCESS TO EVIDENCE

Axon Evidence governs access to stored information through agency-defined access control settings and configurations. Administrators will create roles for different users that dictate levels of access. Each Axon Evidence user will then be assigned one of these roles, which determines if they do or do not have access to particular DEMS features and functions. Agencies can also create cases and groups to control evidence access lists and improve sharing workflows.

Additionally, Axon Evidence provides many agency-customizable security features to secure digital evidence, including password complexity requirements, failed login limits, and enforced timeout settings. Multi-factor authentication options are also available to allow a user to access the system without the need for an administrator's approval.

### / PROTECTING THE CHAIN OF CUSTODY

Robust evidence, device, and user audit trails help protect the chain of custody within the system. For peace of mind, every action taken by your personnel when in the system is tracked and recorded in a tamperproof audit trail.

Axon's compliance demonstrates our commitment to providing a trustworthy platform and offers La Marque Police Dept. - TX a way to understand the controls put in place to secure Axon Evidence and the data you store in it.

### / SECURING THE SYSTEM AND EVIDENCE

Axon Evidence was designed and operates to ensure compliance with the FBI CJIS Security Policy. La Marque Police Dept. - TX can be assured that your digital data is protected by a robust information security program designed to exceed the CJIS security requirements as well as provide protection against current and emerging threats.

Additionally, all evidence data is encrypted at rest and in transit. Robust SSL/TLS is implemented for data in transit using TLS 1.2 with a 256-bit connection and Perfect Forward Secrecy. Evidence data stored at rest is encrypted with at least 256-bit AES.

## UNLIMITED STORAGE

Our Axon Body Camera Unlimited with Axon Fleet 3 bundle includes unlimited storage for all evidence—including Axon-generated footage, third-party footage, and anything else that can be stored in Axon Evidence. With unlimited storage, your agency will be equipped to

make Axon Evidence your single destination for storage of your most critical evidence, without having to worry about storage overages or additional fees.

# ADDITIONAL SOLUTIONS

## AXON FLEET 3

Axon Fleet 3 is an in-car video system purpose-built to capture audio and video within and outside of the vehicle. Axon Fleet 3 offers comprehensive evidence capture so that incidents are accurately documented and policing processes become more efficient and purposeful. Evidence captured by the system is stored on the Axon Hub and offloaded to Axon Evidence via LTE or Wi-Fi connections.



Axon Fleet 3 also comes equipped with real-time awareness technology that makes livestreaming a video feed from the front-facing camera possible, as well as Axon Signal technology to automatically start a recording if a particular action is taken or a device is engaged.

### AXON FLEET 3 IN THE FIELD

Vehicles equipped with Axon Fleet 3 can capture clear and admissible evidence from two cameras—including a front-facing Dual-View camera and rear-facing Interior Camera—both with four configurable resolutions from 480p to 1080p.

The Dual-View Camera supports a Panoramic mode with a 5:2 aspect ratio. This aspect ratio lessens the view of the vehicle's hood—as well as the sky—when recording, which helps capture a wider view of events happening in front of the vehicle. The camera uses two built-in image sensors and auto-exposure capabilities to record high-quality video in all conditions ranging from dim twilight to bright daylight. This technology helps the camera adjust to a variety of lighting environments as the patrol vehicle moves, including traveling through tunnels and parking garages.

The Interior Camera captures video in full color during daylight operation and automatically transitions to capture video in infrared at night. This infrared technology enables video recording even in total darkness, ensuring any activity taking place within the vehicle's cabin is documented. The Interior Camera has a set aspect ratio of 4:3, which allows the camera to capture video evidence of the back cabin, from door-to-door, and above an occupant's head to below their knees.

Each Axon Fleet 3 camera leverages a multi-microphone setup. The Dual-View Camera has three built-in microphones, and the Interior Camera has two built-in microphones. With these multiple integrated microphones, Axon Fleet 3 can make the most effective use of Axon's audio algorithm—developed in partnership with Nokia—which dramatically improves captured audio. Combining Nokia-OZO's Audio Focus and Audio Windscreen technology with our audio algorithm helps to improve the clarity of speech and reduce unwanted environmental noise in a variety of recording environments.

/ ADDITIONAL FEATURES AND BENEFITS

- A DURABLE DESIGN that has been tested to meet/pass the Ingress Protection Rating, MIL-STD Defense, and Impact Certified standards, and can withstand impacts and operate in a range of temperatures.
- CONTINUOUS SYSTEM POWER FROM THE PATROL VEHICLE'S ENGINE that keeps the system running while the ignition is switched on.
- BACK UP BATTERY POWER for up to 30 minutes once the ignition is switched off.
- A CONFIGURABLE PRE-EVENT BUFFER that can capture up to two minutes of video before the camera is actively recording.
- EMBEDDED AXON SIGNAL TECHNOLOGY tied to configurable triggers that activate cameras if a particular action is taken—like a door being opened or a weapon rack being unlocked.
- VIDEO RECALL FEATURE that allows for recovery of video footage if a device was not recording at the time of an incident.
- SUPPORT for up to five in-car video cameras.

### / EASE OF USE THROUGH AXON FLEET DASHBOARD

The Axon Fleet Dashboard application—designed for a police vehicle's MDC—can be used to control and support your Axon Fleet 3 in-car cameras. Axon Fleet Dashboard allows users to start and stop camera recordings, play recorded videos, add metadata to videos, and offload evidence directly from the vehicle.

Once signed in to Axon Fleet Dashboard, users can interact with and navigate four main pages:

- DEVICES – Users can review camera status, manually start and stop a camera recording, and watch live views from connected in-car and body-worn cameras.
- VIDEOS – Users can review and add metadata to videos, position videos for priority upload, and check the upload status of videos.
- SETTINGS – Users can review vehicle, user, and system information, pair with and change body-worn camera settings, and sign out of the application.

Axon Fleet Dashboard also supports the ability for two users to be signed into the same session at once. Any video evidence recorded when two users are signed in will have dual ownership when evidence is uploaded to Axon Evidence, thus allowing both users to access and manage the captured evidence.

## AXON FLEET 3 AT THE STATION

When in the field, an Axon Fleet 3 patrol vehicle is constantly connected to Axon Evidence through the Cradlepoint router. This router uploads video evidence stored on the Axon Fleet Hub—the in-car vehicle's storage system—via an LTE or Wi-Fi connection. This constant transfer of data helps to both free up onboard storage and reduce manual upload processes when back at the station, and makes evidence available to Axon Evidence administrators and La Marque Police Dept. - TX's command staff faster.

### REAL-TIME SITUATIONAL AWARENESS

# DEDICATION TO CUSTOMER SUCCESS

Once a solution is delivered, most agencies are left asking, what's next? Axon has you covered. We are committed to providing La Marque Police Dept. - TX with post-sales and post-deployment support. Whether that be troubleshooting assistance, technical support, additional training, consulting advice, or help with exchanging and returning equipment, our dedicated team is here for you. Through regular communication, our knowledgeable staff can offer La Marque Police Dept. - TX the support you should expect from a service provider. This support includes access to:

- 24/7 CUSTOMER SUPPORT – Axon's full customer support division is available via live phone support, 24 hours a day, seven days a week.
- PROFESSIONAL SERVICES – Experienced and skilled personnel who are involved in the implementation, development, deployment, management, and support of your Axon program
- SALES ENGINEERS (SE) – SEs own the technical aspects of the sales process and have a technical mindset that allows them to understand complex systems and solve intricate challenges involving hardware, software, and network issues
- CUSTOMER SUCCESS MANAGERS – Dedicated Axon personnel assigned per agency who communicate important operating system/firmware and hardware updates, identify day-to-day bugs, and address general issues, as well as fulfill hardware refreshes and deployment of new equipment, conduct quarterly business reviews with customers, and identify important customer feature requests
- ECOMMERCE – Axon's online store available to clients for an expedited purchasing experience on smaller orders
- CONSULTANTS – Part-time expert consultants, made up of retired law enforcement leaders, who deliver service on smaller projects and serve as additional resources on large projects
- AXON WEEK – Axon's user conference brings members of the law enforcement community, technology leaders, and prosecutors together to learn how agencies can make policing more effective and efficient with Axon products
- ACCOUNT MANAGEMENT HELP – Available assistance when issues arise with an agency's account
- LEARNING AND DEVELOPMENT – Ongoing training courses that cover and promote proper software and hardware use and compliance

Our goal is to provide La Marque Police Dept. - TX with the necessary assistance to help make the most of the solutions you count on every day. With a network of resources dedicated to and designed to meet the needs of law enforcement, Axon is here to help.

CAPTURE TRUTH

ACCELERATE JUSTICE

# PROTECT LIFE

AXON

**Axon Enterprise, Inc.**
17800 N 85th St.
Scottsdale, Arizona 85255
United States
VAT: 86-0741227
Domestic: (800) 978-2737
International: +1.800.978.2737

**Q-663921-45701.504BH**

Issued: 02/13/2025

Quote Expiration: 03/28/2025

Estimated Contract Start Date: 05/01/2025

Account Number: 121452

Payment Terms:

Delivery Method:

| SHIP TO | BILL TO |
|---|---|
| La Marque Police Dept. - TX<br>431 Bayou Rd<br>La Marque,<br>TX<br>77568-4147<br>USA | La Marque Police Dept. - TX<br>431 Bayou Rd<br>La Marque<br>TX<br>77568-4147<br>USA<br>Email: |

| SALES REPRESENTATIVE | PRIMARY CONTACT |
|---|---|
| Brayden Herrera<br>Phone:<br>Email: bherrera@axon.com<br>Fax: | Gilberto Rodriguez<br>Phone: 4099389241<br>Email: g.rodriguez@cityoflamarque.org<br>Fax: |

## Quote Summary

| | |
|---|---|
| Program Length | 60 Months |
| **TOTAL COST** | $615,791.10 |
| **ESTIMATED TOTAL W/ TAX** | $615,791.10 |

## Discount Summary

| | |
|---|---|
| Average Savings Per Year | $21,830.88 |
| **TOTAL SAVINGS** | $109,154.40 |

## Payment Summary

| Date | Subtotal | Tax | Total |
|---|---|---|---|
| Apr 2025 | $143,000.00 | $0.00 | $143,000.00 |
| Apr 2026 | $118,197.78 | $0.00 | $118,197.78 |
| Apr 2027 | $118,197.78 | $0.00 | $118,197.78 |
| Apr 2028 | $118,197.77 | $0.00 | $118,197.77 |
| Apr 2029 | $118,197.77 | $0.00 | $118,197.77 |
| **Total** | **$615,791.10** | **$0.00** | **$615,791.10** |

| | |
|---|---|
| **Quote Unbundled Price:** | **$724,945.50** |
| **Quote List Price:** | **$625,790.10** |
| **Quote Subtotal:** | **$615,791.10** |

## Pricing

***All deliverables are detailed in Delivery Schedules section lower in proposal***

| Item | Description | Qty | Term | Unbundled | List Price | Net Price | Subtotal | Tax | Total |
|---|---|---|---|---|---|---|---|---|---|
| **Program** | | | | | | | | | |
| BWCUwTAP | BWC Unlimited with TAP | 34 | 60 | $130.12 | $99.66 | $99.66 | $203,306.40 | $0.00 | $203,306.40 |
| Fleet3B+TAP | Fleet 3 Basic + TAP | 27 | 60 | $227.59 | $204.74 | $204.74 | $331,678.80 | $0.00 | $331,678.80 |
| **A la Carte Hardware** | | | | | | | | | |
| H00002 | AB4 Multi Bay Dock Bundle | 5 | | | $1,638.90 | $1,638.90 | $8,194.50 | $0.00 | $8,194.50 |
| H00001 | AB4 Camera Bundle | 34 | | | $899.00 | $899.00 | $30,566.00 | $0.00 | $30,566.00 |
| **A la Carte Software** | | | | | | | | | |
| 73680 | AXON FUSUS - LICENSE - BWC CONNECTIVITY AND PLUS USER | 34 | 60 | | $20.61 | $20.61 | $42,044.40 | $0.00 | $42,044.40 |
| **A la Carte Services** | | | | | | | | | |
| 85144 | AXON BODY - PSO - STARTER | 1 | | | $10,000.00 | $1.00 | $1.00 | $0.00 | $1.00 |
| **Total** | | | | | | | **$615,791.10** | **$0.00** | **$615,791.10** |

## Delivery Schedule

### Hardware

| Bundle | Item | Description | QTY | Shipping Location | Estimated Delivery Date |
|---|---|---|---|---|---|
| AB4 Camera Bundle | 100147 | AXON BODY 4 - CAMERA - NA US FIRST RESPONDER BLK RAPIDLOCK | 1 | 1 | 04/01/2025 |
| AB4 Camera Bundle | 100147 | AXON BODY 4 - CAMERA - NA US FIRST RESPONDER BLK RAPIDLOCK | 34 | 1 | 04/01/2025 |
| AB4 Camera Bundle | 100466 | AXON BODY 4 - CABLE - USB-C TO USB-C | 38 | 1 | 04/01/2025 |
| AB4 Camera Bundle | 100775 | AXON BODY 4 - MAGNETIC DISCONNECT CABLE | 38 | 1 | 04/01/2025 |
| AB4 Camera Bundle | 74028 | AXON BODY - MOUNT - WING CLIP RAPIDLOCK | 38 | 1 | 04/01/2025 |
| AB4 Multi Bay Dock Bundle | 100206 | AXON BODY 4 - 8 BAY DOCK | 5 | 1 | 04/01/2025 |
| AB4 Multi Bay Dock Bundle | 70033 | AXON - DOCK WALL MOUNT - BRACKET ASSY | 5 | 1 | 04/01/2025 |
| AB4 Multi Bay Dock Bundle | 71019 | AXON BODY - DOCK POWERCORD - NORTH AMERICA | 5 | 1 | 04/01/2025 |
| Fleet 3 Basic + TAP | 100989 | AXON FLEET - CRADLEPOINT R920-C7A+5YR NETCLOUD | 27 | 1 | 04/01/2025 |
| Fleet 3 Basic + TAP | 70112 | AXON SIGNAL - VEHICLE | 27 | 1 | 04/01/2025 |
| Fleet 3 Basic + TAP | 71200 | AXON FLEET - AIRGAIN ANT - 5-IN-1 2LTE 2WIFI 1GNSS BL | 27 | 1 | 04/01/2025 |
| Fleet 3 Basic + TAP | 72036 | AXON FLEET 3 - STANDARD 2 CAMERA KIT | 27 | 1 | 04/01/2025 |
| BWC Unlimited with TAP | 73309 | AXON BODY - TAP REFRESH 1 - CAMERA | 35 | 1 | 10/01/2027 |
| BWC Unlimited with TAP | 73689 | AXON BODY - TAP REFRESH 1 - DOCK MULTI BAY | 5 | 1 | 10/01/2027 |
| BWC Unlimited with TAP | 73310 | AXON BODY - TAP REFRESH 2 - CAMERA | 35 | 1 | 04/01/2030 |
| BWC Unlimited with TAP | 73688 | AXON BODY - TAP REFRESH 2 - DOCK MULTI BAY | 5 | 1 | 04/01/2030 |
| Fleet 3 Basic + TAP | 72040 | AXON FLEET - TAP REFRESH 1 - 2 CAMERA KIT | 27 | 1 | 04/01/2030 |

## Software

| Bundle | Item | Description | QTY | Estimated Start Date | Estimated End Date |
|---|---|---|---|---|---|
| BWC Unlimited with TAP | 73686 | AXON EVIDENCE - STORAGE - UNLIMITED (AXON DEVICE) | 34 | 05/01/2025 | 04/30/2030 |
| BWC Unlimited with TAP | 73746 | AXON EVIDENCE - ECOM LICENSE - PRO | 34 | 05/01/2025 | 04/30/2030 |
| Fleet 3 Basic + TAP | 80400 | AXON EVIDENCE - FLEET VEHICLE LICENSE | 27 | 05/01/2025 | 04/30/2030 |
| Fleet 3 Basic + TAP | 80410 | AXON EVIDENCE - STORAGE - FLEET 1 CAMERA UNLIMITED | 54 | 05/01/2025 | 04/30/2030 |
| A la Carte | 73680 | AXON FUSUS - LICENSE - BWC CONNECTIVITY AND PLUS USER | 34 | 05/01/2025 | 04/30/2030 |

## Services

| Bundle | Item | Description | QTY |
|---|---|---|---|
| Fleet 3 Basic + TAP | 100738 | AXON FLEET 3 - SIM INSERTION - VZW 4FF | 27 |
| Fleet 3 Basic + TAP | 73391 | AXON FLEET 3 - DEPLOYMENT PER VEHICLE - NOT OVERSIZED | 27 |
| A la Carte | 85144 | AXON BODY - PSO - STARTER | 1 |

## Warranties

| Bundle | Item | Description | QTY | Estimated Start Date | Estimated End Date |
|---|---|---|---|---|---|
| BWC Unlimited with TAP | 80464 | AXON BODY - TAP WARRANTY - CAMERA | 34 | 04/01/2026 | 04/30/2030 |
| BWC Unlimited with TAP | 80464 | AXON BODY - TAP WARRANTY - CAMERA | 1 | 04/01/2026 | 04/30/2030 |
| BWC Unlimited with TAP | 80465 | AXON BODY - TAP WARRANTY - MULTI BAY DOCK | 5 | 04/01/2026 | 04/30/2030 |
| Fleet 3 Basic + TAP | 80379 | AXON SIGNAL - EXT WARRANTY - SIGNAL UNIT | 27 | 04/01/2026 | 04/30/2030 |
| Fleet 3 Basic + TAP | 80495 | AXON FLEET 3 - EXT WARRANTY - 2 CAMERA KIT | 27 | 04/01/2026 | 04/30/2030 |

## Shipping Locations

| Location Number | Street | City | State | Zip | Country |
|---|---|---|---|---|---|
| 1 | 431 Bayou Rd | La Marque | TX | 77568-4147 | USA |

## Payment Details

### Apr 2025

| Invoice Plan | Item | Description | Qty | Subtotal | Tax | Total |
|---|---|---|---|---|---|---|
| Fleet Grant Upfront | Fleet3B+TAP | Fleet 3 Basic + TAP | 27 | $143,000.00 | $0.00 | $143,000.00 |
| **Total** | | | | **$143,000.00** | **$0.00** | **$143,000.00** |

### Apr 2026

| Invoice Plan | Item | Description | Qty | Subtotal | Tax | Total |
|---|---|---|---|---|---|---|
| Body Cams | 73680 | AXON FUSUS - LICENSE - BWC CONNECTIVITY AND PLUS USER | 34 | $10,511.10 | $0.00 | $10,511.10 |
| Body Cams | 85144 | AXON BODY - PSO - STARTER | 1 | $0.25 | $0.00 | $0.25 |
| Body Cams | BWCUwTAP | BWC Unlimited with TAP | 34 | $50,826.59 | $0.00 | $50,826.59 |
| Body Cams | Fleet3B+TAP | Fleet 3 Basic + TAP | 27 | $0.14 | $0.00 | $0.14 |
| Body Cams | H00001 | AB4 Camera Bundle | 34 | $7,641.50 | $0.00 | $7,641.50 |
| Body Cams | H00002 | AB4 Multi Bay Dock Bundle | 5 | $2,048.63 | $0.00 | $2,048.63 |
| Fleet Cams | Fleet3B+TAP | Fleet 3 Basic + TAP | 27 | $47,169.57 | $0.00 | $47,169.57 |
| **Total** | | | | **$118,197.78** | **$0.00** | **$118,197.78** |

### Apr 2027

| Invoice Plan | Item | Description | Qty | Subtotal | Tax | Total |
|---|---|---|---|---|---|---|
| Body Cams | 73680 | AXON FUSUS - LICENSE - BWC CONNECTIVITY AND PLUS USER | 34 | $10,511.10 | $0.00 | $10,511.10 |
| Body Cams | 85144 | AXON BODY - PSO - STARTER | 1 | $0.25 | $0.00 | $0.25 |
| Body Cams | BWCUwTAP | BWC Unlimited with TAP | 34 | $50,826.59 | $0.00 | $50,826.59 |
| Body Cams | Fleet3B+TAP | Fleet 3 Basic + TAP | 27 | $0.14 | $0.00 | $0.14 |
| Body Cams | H00001 | AB4 Camera Bundle | 34 | $7,641.50 | $0.00 | $7,641.50 |
| Body Cams | H00002 | AB4 Multi Bay Dock Bundle | 5 | $2,048.63 | $0.00 | $2,048.63 |
| Fleet Cams | Fleet3B+TAP | Fleet 3 Basic + TAP | 27 | $47,169.57 | $0.00 | $47,169.57 |
| **Total** | | | | **$118,197.78** | **$0.00** | **$118,197.78** |

### Apr 2028

| Invoice Plan | Item | Description | Qty | Subtotal | Tax | Total |
|---|---|---|---|---|---|---|
| Body Cams | 73680 | AXON FUSUS - LICENSE - BWC CONNECTIVITY AND PLUS USER | 34 | $10,511.10 | $0.00 | $10,511.10 |
| Body Cams | 85144 | AXON BODY - PSO - STARTER | 1 | $0.25 | $0.00 | $0.25 |
| Body Cams | BWCUwTAP | BWC Unlimited with TAP | 34 | $50,826.59 | $0.00 | $50,826.59 |
| Body Cams | Fleet3B+TAP | Fleet 3 Basic + TAP | 27 | $0.14 | $0.00 | $0.14 |
| Body Cams | H00001 | AB4 Camera Bundle | 34 | $7,641.50 | $0.00 | $7,641.50 |
| Body Cams | H00002 | AB4 Multi Bay Dock Bundle | 5 | $2,048.63 | $0.00 | $2,048.63 |
| Fleet Cams | Fleet3B+TAP | Fleet 3 Basic + TAP | 27 | $47,169.56 | $0.00 | $47,169.56 |
| **Total** | | | | **$118,197.77** | **$0.00** | **$118,197.77** |

| Apr 2029 | | | | | | |
|---|---|---|---|---|---|---|
| **Invoice Plan** | **Item** | **Description** | **Qty** | **Subtotal** | **Tax** | **Total** |
| Body Cams | 73680 | AXON FUSUS - LICENSE - BWC CONNECTIVITY AND PLUS USER | 34 | $10,511.10 | $0.00 | $10,511.10 |
| Body Cams | 85144 | AXON BODY - PSO - STARTER | 1 | $0.25 | $0.00 | $0.25 |
| Body Cams | BWCUwTAP | BWC Unlimited with TAP | 34 | $50,826.59 | $0.00 | $50,826.59 |
| Body Cams | Fleet3B+TAP | Fleet 3 Basic + TAP | 27 | $0.14 | $0.00 | $0.14 |
| Body Cams | H00001 | AB4 Camera Bundle | 34 | $7,641.50 | $0.00 | $7,641.50 |
| Body Cams | H00002 | AB4 Multi Bay Dock Bundle | 5 | $2,048.63 | $0.00 | $2,048.63 |
| Fleet Cams | Fleet3B+TAP | Fleet 3 Basic + TAP | 27 | $47,169.56 | $0.00 | $47,169.56 |
| **Total** | | | | **$118,197.77** | **$0.00** | **$118,197.77** |

**Tax is estimated based on rates applicable at date of quote and subject to change at time of invoicing. If a tax exemption certificate should be applied, please submit prior to invoicing.**

Contract BuyBoard Contract 743-24 is incorporated by reference into the terms and conditions of this Agreement. In the event of conflict the terms of Axon's Master Services and Purchasing Agreement shall govern.

## Standard Terms and Conditions

Axon Enterprise Inc. Sales Terms and Conditions

Axon Master Services and Purchasing Agreement:

This Quote is limited to and conditional upon your acceptance of the provisions set forth herein and Axon's Master Services and Purchasing Agreement (posted at https://www.axon.com/sales-terms-and-conditions), as well as the attached Statement of Work (SOW) for Axon Fleet and/or Axon Interview Room purchase, if applicable. In the event you and Axon have entered into a prior agreement to govern all future purchases, that agreement shall govern to the extent it includes the products and services being purchased and does not conflict with the Axon Customer Experience Improvement Program Appendix as described below.

ACEIP:

The Axon Customer Experience Improvement Program Appendix, which includes the sharing of de-identified segments of Agency Content with Axon to develop new products and improve your product experience (posted at www.axon.com/legal/sales-terms-and-conditions), is incorporated herein by reference. By signing below, you agree to the terms of the Axon Customer Experience Improvement Program.

Acceptance of Terms:

Any purchase order issued in response to this Quote is subject solely to the above referenced terms and conditions. By signing below, you represent that you are lawfully able to enter into contracts. If you are signing on behalf of an entity (including but not limited to the company, municipality, or government agency for whom you work), you represent to Axon that you have legal authority to bind that entity. If you do not have this authority, please do not sign this Quote.

Signature

Date Signed

2/13/2025



# FLEET STATEMENT OF WORK BETWEEN AXON ENTERPRISE AND AGENCY

## Introduction

This Statement of Work ("SOW") has been made and entered into by and between Axon Enterprise, Inc. ("AXON"), and La Marque Police Dept. - TX the ("AGENCY") for the purchase of the Axon Fleet in-car video solution ("FLEET") and its supporting information, services and training. (AXON Technical Project Manager/The AXON installer)

## Purpose and Intent

AGENCY states, and AXON understands and agrees, that Agency's purpose and intent for entering into this SOW is for the AGENCY to obtain from AXON deliverables, which used solely in conjunction with AGENCY's existing systems and equipment, which AGENCY specifically agrees to purchase or provide pursuant to the terms of this SOW.

This SOW contains the entire agreement between the parties. There are no promises, agreements, conditions, inducements, warranties or understandings, written or oral, expressed or implied, between the parties, other than as set forth or referenced in the SOW.

## Acceptance

Upon completion of the services outlined in this SOW, AGENCY will be provided a professional services acceptance form ("Acceptance Form"). AGENCY will sign the Acceptance Form acknowledging that services have been completed in substantial conformance with this SOW and the Agreement. If AGENCY reasonably believes AXON did not complete the professional services in conformance with this SOW, AGENCY must notify AXON in writing of the specific reasons within seven (7) calendar days from delivery of the Acceptance Form. AXON will remedy the issues to conform with this SOW and re-present the Acceptance Form for signature. If AXON does not receive the signed Acceptance Form or written notification of the reasons for rejection within 7 calendar days of the delivery of the Acceptance Form, AGENCY will be deemed to have accepted the services in accordance to this SOW.

## Force Majeure

Neither party hereto shall be liable for delays or failure to perform with respect to this SOW due to causes beyond the party's reasonable control and not avoidable by diligence.

**Schedule Change**

Each party shall notify the other as soon as possible regarding any changes to agreed upon dates and times of Axon Fleet in-car Solution installation to be performed pursuant of this Statement of Work.

**Axon Fleet Deliverables**

Typically, within (30) days of receiving this fully executed SOW, an AXON Technical Project Manager will deliver to AGENCY's primary point of contact via electronic media, controlled documentation, guides, instructions and videos followed by available dates for the initial project review and customer readiness validation. Unless otherwise agreed upon by AXON, AGENCY may print and reproduce said documents for use by its employees only.

**Security Clearance and Access**

Upon AGENCY's request, AXON will provide the AGENCY a list of AXON employees, agents, installers or representatives which require access to the AGENCY's facilities in order to perform Work pursuant of this Statement of Work. AXON will ensure that each employee, agent or representative has been informed or and consented to a criminal background investigation by AGENCY for the purposes of being allowed access to AGENCY's facilities. AGENCY is responsible for providing AXON with all required instructions and documentation accompanying the security background check's requirements.

**Training**

AXON will provide training applicable to Axon Evidence, Cradlepoint NetCloud Manager and Axon Fleet application in a train-the-trainer style method unless otherwise agreed upon between the AGENCY and AXON.

**Local Computer**

AGNECY is responsible for providing a mobile data computer (MDC) with the same software, hardware, and configuration that AGENCY personnel will use with the AXON system being installed. AGENCY is responsible for making certain that any and all security settings (port openings, firewall settings, antivirus software, virtual private network, routing, etc.) are made prior to the installation, configuration and testing of the aforementioned deliverables.

**Network**

AGENCY is responsible for making certain that any and all network(s) route traffic to appropriate endpoints and AXON is not liable for network breach, data interception, or loss of data due to misconfigured firewall settings or virus infection, except to the extent that such virus or infection is caused, in whole or in part, by defects in the deliverables.

**Cradlepoint Router**

When applicable, AGENCY must provide AXON Installers with temporary administrative access to Cradlepoint's NetCloud Manager to the extent necessary to perform Work pursuant of this Statement of Work.

**Evidence.com**

AGENCY must provide AXON Installers with temporary administrative access to Axon Evidence.com to the extent necessary to perform Work pursuant of this SOW.

**Wireless Upload System**

If purchased by the AGENCY, on such dates and times mutually agreed upon by the parties, AXON will install and configure into AGENCY's existing network a wireless network infrastructure as identified in the AGENCY's binding quote based on conditions of the sale.

## VEHICLE INSTALLATION

**Preparedness**

On such dates and times mutually agreed upon by the parties, the AGENCY will deliver all vehicles to an AXON Installer less weapons and items of evidence. Vehicle(s) will be deemed 'out of service' to the extent necessary to perform Work pursuant of this SOW.

**Existing Mobile Video Camera System Removal**

On such dates and times mutually agreed upon by the parties, the AGENCY will deliver all vehicles to an AXON Installer which will remove from said vehicles all components of the existing mobile video camera system unless otherwise agreed upon by the AGENCY.

Major components will be salvaged by the AXON Installer for auction by the AGENCY. Wires and cables are ~~not~~ considered expendable and will not be salvaged. Salvaged components will be placed in a designated area by the AGENCY within close proximity of the vehicle in an accessible work space.

Prior to removing the existing mobile video camera systems, it is both the responsibility of the AGENCY and the AXON Installer to test the vehicle's systems' operation to identify and operate, documenting any existing component or system failures and in detail, identify which components of the existing mobile video camera system will be removed by the AXON Installer.

**In-Car Hardware/Software Delivery and Installation**

On such dates and times mutually agreed upon by the parties, the AGENCY will deliver all vehicles to an AXON Installer, who will install and configure in each vehicle in accordance with the specifications detailed in the system's installation manual and its relevant addendum(s). Applicable in-car hardware will be installed and configured as defined and validated by the AGENCY during the pre-deployment discovery process.

If a specified vehicle is unavailable on the date and time agreed upon by the parties, AGENCY will provide a similar vehicle for the installation process. Delays due to a vehicle, or substitute vehicle, not being available at agreed upon dates and times may results in additional fees to the AGENCY. If the AXON Installer determines that a vehicle is not properly prepared for installation ("Not Fleet Ready"), such as a battery not being properly charged or properly up-fit for in-service, field operations, the issue shall be reported immediately to the AGENCY for resolution and a date and time for the future installation shall be agreed upon by the parties.

Upon completion of installation and configuration, AXON will systematically test all installed and configured in-car hardware and software to ensure that ALL functions of the hardware and software are fully operational and that any deficiencies are corrected unless otherwise agreed upon by the AGENCY, installation, configuration, test and the correct of any deficiencies will be completed in each vehicle accepted for installation.

Prior to installing the Axon Fleet camera systems, it is both the responsibility of the AGENCY and the AXON Installer to test the vehicle's existing systems' operation to identify, document any existing component or vehicle systems' failures. Prior to any vehicle up-fitting the AXON Installer will introduce the system's components, basic functions, integrations and systems overview along with reference to AXON approved, AGENCY manuals, guides, portals and videos. It is both the responsibility of the AGENCY and the AXON Installer to agree on placement of each components, the antenna(s), integration recording trigger sources and customer preferred power, ground and ignition sources prior to permanent or temporary installation of an Axon Fleet camera solution in each vehicle type. Agreed placement will be documented by the AXON Installer.

AXON welcomes up to 5 persons per system operation training session per day, and unless otherwise agreed upon by the AGENCY, the first vehicle will be used for an installation training demonstration. The second vehicle will be used for an assisted installation training demonstration. The installation training session is customary to any AXON Fleet installation service regardless of who performs the continued Axon Fleet system installations.

The customary training session does not ‘certify’ a non-AXON Installer, customer-employed Installer or customer 3rd party Installer, since the AXON Fleet products does not offer an Installer certification program.  Any work performed by non-AXON Installer, customer-employed Installer or customer 3rd party Installer is not warrantied by AXON, and AXON is not liable for any damage to the vehicle and its existing systems and AXON Fleet hardware.

GALVESTON COUNTY
The Daily News.

See Proof on Next Page

**AFFIDAVIT OF PUBLICATION**

State of New Jersey, County of Burlington, ss:

Deidre Stevens-DiGiovanni, being first duly sworn, deposes and says: That (s)he is a duly authorized signatory of Column Software, PBC, duly authorized agent of The Galveston County Daily News, a newspaper printed and published in the City of Texas City, County of Galveston, State of Texas, and that this affidavit is Page 1 of 2 with the full text of the sworn-to notice set forth on the pages that follow, and the hereto attached:

**PUBLICATION DATES:**
Feb. 12, 2025

**NOTICE ID:** a5OKwetky6W2bgBxjHNG
**PUBLISHER ID:** 1295920
**NOTICE NAME:** PH O-2025-0003
**Publication Fee:** $197.60

I declare under penalty of perjury that the foregoing is true and correct.

(Signed) Deidre Stevens-DiGiovanni

**VERIFICATION**

State of New Jersey
County of Burlington

LIZA ORTIZ
NOTARY PUBLIC
STATE OF NEW JERSEY
My Commission Expires November 27, 2028

Subscribed in my presence and sworn to before me on this: 02/13/2025

Notary Public
Notarized remotely online using communication technology via Proof.

**Ordinance**

**ORDINANCE NO. O-2025-0003**

AN ORDINANCE OF THE CITY OF LA MARQUE, TEXAS FOR THE CREATION OF A HEAVY INDUSTRIAL ZONING DISTRICT

**PASSED AND APPROVED** by City Council of the City of La Marque on First reading this **10th** day of **February**, 2025.

**A PUBLIC HEARING WILL BE HELD DURING THE CITY COUNCIL MEETING ON MONDAY, MARCH 10, 2025, AT 6:00 P.M. IN THE COUNCIL CHAMBERS, 1109-B BAYOU ROAD, LA MARQUE, TEXAS 77568**

Kierra Nance, City Clerk
City of La Marque

Published: February 12, 2025

GALVESTON COUNTY
The Daily News.

See Proof on Next Page

**AFFIDAVIT OF PUBLICATION**

State of Florida, County of Broward, ss:

Yuade Moore, being first duly sworn, deposes and says: That (s)he is a duly authorized signatory of Column Software, PBC, duly authorized agent of The Galveston County Daily News, a newspaper printed and published in the City of Texas City, County of Galveston, State of Texas, and that this affidavit is Page 1 of 2 with the full text of the sworn-to notice set forth on the pages that follow, and the hereto attached:

**PUBLICATION DATES:**
Feb. 12, 2025

**NOTICE ID:** Lr8RgRZAG5LB1zzgIupc
**PUBLISHER ID:** 1295923
**NOTICE NAME:** PH O-2025-0004
**Publication Fee:** $210.25

I declare under penalty of perjury that the foregoing is true and correct.

(Signed) Yuade Moore

SHERI SMITH
Notary Public - State of Florida
Commission # HH269383
Expires on May 31, 2026

**VERIFICATION**

State of Florida
County of Broward

Subscribed in my presence and sworn to before me on this: 02/13/2025

S Smith
Notary Public
Notarized remotely online using communication technology via Proof.

**Ordinance**

**ORDINANCE NO. O-2025-0004**

AN ORDINANCE OF THE CITY OF LA MARQUE, TEXAS APPROVING THE REZONING OF PROPERTY OWNED BY COTTER AND ALEXANDER, LLC FROM RESIDENTIAL (R-1) AND COMMERCIAL (C-1) TO LIGHT INDUSTRIAL (L-1)

**PASSED AND APPROVED** by City Council of the City of La Marque on First reading this **10th** day of **February**, 2025.

**A PUBLIC HEARING WILL BE HELD DURING THE CITY COUNCIL MEETING ON MONDAY, MARCH 10, 2025, AT 6:00 P.M. IN THE COUNCIL CHAMBERS, 1109-B BAYOU ROAD, LA MARQUE, TEXAS 77568**

Kierra Nance, City Clerk
City of La Marque

Published: February 12, 2025

GALVESTON COUNTY
The Daily News.

See Proof on Next Page

**AFFIDAVIT OF PUBLICATION**

State of New Jersey, County of Burlington, ss:

Deidre Stevens-DiGiovanni, being first duly sworn, deposes and says: That (s)he is a duly authorized signatory of Column Software, PBC, duly authorized agent of The Galveston County Daily News, a newspaper printed and published in the City of Texas City, County of Galveston, State of Texas, and that this affidavit is Page 1 of 2 with the full text of the sworn-to notice set forth on the pages that follow, and the hereto attached:

**PUBLICATION DATES:**
Jan. 28, 2025

**NOTICE ID:** 0zXEF1pjmhIkbHZe41cn
**PUBLISHER ID:** 1291677
**NOTICE NAME:** PH - Amendment of Impact Fees 2023
**Publication Fee:** $184.95

I declare under penalty of perjury that the foregoing is true and correct.

Deidre Stevens-DiGiovanni

(Signed)_____

**VERIFICATION**

LIZA ORTIZ
NOTARY PUBLIC
STATE OF NEW JERSEY
My Commission Expires November 27, 2028

State of New Jersey
County of Burlington

Subscribed in my presence and sworn to before me on this: 01/29/2025

_____
Notary Public
Notarized remotely online using communication technology via Proof.

**Legal Notice**

**CITY OF LA MARQUE CITY COUNCIL NOTICE OF PUBLIC HEARING ON AMENDMENT OF IMPACT FEES**

Notice is hereby given that the City of La Marque City Council will hold a Public Hearing on Monday, March 10, 2025, at 6:00 p.m. in the City Council Chambers, located at 1109-B Bayou Road, La Marque, Texas. The purpose of the hearing is to consider the amendment of land use assumptions and a capital improvement plan and the imposition of an impact fee. **The Public has the right to appear at the hearing and present evidence for or against the update.** For further information please contact Kierra Nance, City Clerk for the City of La Marque, Texas. Email: cityclerk@cityoflamarque.org.

Published: January 28, 2025

# CITY COUNCIL AGENDA FORM

Meeting Date: March 10, 2025
Agenda Item: 8.I.
Prepared by: Gus Knebel
Reviewed by:
Department: Development Services

**AGENDA ITEM DESCRIPTION:**

Creating a Heavy Industrial Zoning District - *Legal* **THIS IS THE SECOND AND FINAL READING**

**STAFF BRIEFING:**

The I-3 zoning district is proposed to establish heavy industrial uses, facilitate heavy industrial development and use of the district, and protect such areas from the intrusion of certain incompatible uses that might impede the development and use of such lands for heavy industrial purposes.

**HISTORY:**

- November 14, 2023 - Planning and Zoning Commission public hearing: this item was tabled.
- December 12, 2023 - Planning and Zoning Commission public hearing: Commission recommended denial of creation of heavy industrial zoning district.
- January 8, 2024 - First Reading by City Council
- January 22, 2024 - Second reading/ Public Hearing - TABLED
- February 6, 2024 - Joint meeting with Planning and Zoning Commission for Public Hearing; Ordinance O-2024-0001 failed at this meeting due to several change requests
- January 28, 2025 - Planning and Zoning Commission public hearing; discussed options with the railroad attorneys and moved forward with the recommendation with a request for consideration of additional noise abatement
- February 10, 2025 - First Reading by Council for Ordinance O-2025-0003 - MOTION PASSED 4-1 (Ross)
- March 10, 2025 - Second Reading by Council

**FISCAL IMPACT:**

N/A

# ORDINANCE NO. O-2025-00

**AN ORDINANCE OF THE CITY OF LA MARQUE, TEXAS AMENDING THE CITY'S CODE OF ORDINANCES BY ADDING A HEAVY INDUSTRIAL ZONING DISTRICT AND MAKING PROVISIONS THEREFORE; PROVIDING A PENALTY IN AN AMOUNT NOT TO EXCEED $2,000 FOR EACH VIOLATION; PROVIDING AN EFFECTIVE DATE; AND MAKING OTHER PROVISIONS RELATED TO THE SUBJECT.**

**WHEREAS**, The City Council has conducted, in the time and manner required by law, a public hearing on the creation of a new heavy industrial zoning district in the City of La Marque, Texas;

**WHEREAS**, the City Council finds the proposed zoning district creation is consistent with the City's comprehensive plan, and a heavy industrial zoning district should be created in the City.

**NOW THEREFORE BE IT ORDAINED BY THE CITY COUNCIL OF THE CITY OF LA MARQUE, TEXAS THAT:**

**Section 1.** The foregoing recitals are hereby found to be true and correct and are hereby adopted by the City Council and made a part hereof for all purposes as findings of fact.

**Section 2.** Section 71-16 is added to the City's Code of Ordinances to read as follows:

**Sec. 71-16. I-3 Industrial**

(a) *Purpose.*

The I-3 district is established to accommodate light and heavy industrial uses, facilitate all types of industrial development and use of the district, and protect such areas from the intrusion of certain incompatible uses that might impede the development and use of such lands for all industrial purposes. Environmental Protection Agency and Occupational Health and Safety Administration regulations are enforceable to the extent applicable by law.

The noise, smoke, odor, vibration and/or traffic typically generated by certain industrial uses require the buffering, screening, landscaping, setbacks and other performance standards required herein to protect any nearby residential areas.

(b) *Principal uses.*

The following uses are permitted:

(1) Mini-warehouses;

(2) Warehousing completely within an enclosed building;

(3) Wholesale operations within an enclosed building;

(4) Testing laboratories;

(5) Motor freight terminals;

(6) Trucking terminals;

(7) Railway freight terminals;

(8) Outdoor storage of sand, gravel, rock, earth, wood, or other materials utilized in construction or industrial processes on-site;

(9) Outdoor storage of industrial equipment or supplies;

(10) Sales, rental and storage of heavy load vehicles, tractor trailers, cranes, bulldozers or similar equipment;

(11) Research and development facilities and laboratories;

(12) Instrument and component manufacturing facilities;

(13) Apparel manufacturing facilities;

(14) Transportation component manufacturing facilities;

(15) Printing and allied products facilities;

(16) Electrical machine manufacturing facilities;

(17) Offices equipment and supplies manufacturing facilities;

(18) Medical and pharmaceutical supplies manufacturing;

(19) Offices;

(20) Equipment storage and rental, outdoor storage and lay down yards, fabrication shops, warehousing, material and supply sales, office and parking;

(21) The manufacturing, processing, distributing and/or storage of any material or product from processed or raw materials including, but not limited to, chemicals, petrochemicals or mineral extracts;

(22) Shipyards;

(23) Railroad and railway facilities;

(24**)** Any other manufacturing, industrial or storage use not now or hereafter prohibited by this chapter or any other ordinance of the city;

(25) All uses permitted by right or by conditional use in the C-1, C-2, I-1 and I-2 districts; and

(26) Other industrial, wholesale, manufacturing, construction, or service uses which are similar in character or in furtherance of related operations like those enumerated in this subsection.

(c) *Required separation of certain principal uses from residentially zoned properties.*

The permitted principal uses listed in (b)5-10, 13-15, 20-22 and 24 shall be separated from any nearby residentially zoned property by a minimum of 250 feet. Provided however that this requirement shall not apply if the residentially zoned property: (1.) was zoned residential after the date that the I-3 industrial zoning district was created; (2) is owned by the City or any entity controlled by the City; or (3) is owned by a railroad company or any entity controlled by a railroad company.

For clarification, the following are permitted in the separation area: (i) incidental structures/uses such as fence/wall, landscaping/greenspace, signage and utilities/detention, (ii) residential use of existing residential structures, and (iii) Accessory Uses (see subsection (e)).

(d) *Prohibited Uses*. The following uses are specifically <u>prohibited</u>:

(1) Nuclear power generation operations;

(2) Waste disposal, storage or recycling operations not appurtenant to a permitted use;

(3) Concrete or asphalt batch or ready-mix plant operations;

(4) Rock crushing or aggregate mining operations, <u>except</u> aggregate storage or terminaling for transportation or distribution is permitted;

(5) Munitions or other designed explosives use, testing or storage;

(6) Aviation, space port or other similar facilities;

(7) Mining;

(8) Junkyard, salvage or wrecking yard operations;

(9) Hog or chicken farming;

(10) Meat processing, packing or canning operations, including but not limited to fermenting, canning, slaughtering, rendering, curing, tanning or related processes;

(11) Experimental, research or developmental or testing laboratories relating to biological or viral materials;

(12) Wood treating or processing plant;

(13) Pesticide manufacturing, or storage of pesticides, except storage in rail cars properly classified as goods in transit is permitted; and

(14) Open earth storage of petroleum products.

(e) *Accessory uses. The following uses are permitted accessory to the principal use:*

(1) Paved automobile parking lots incidental to the principal use;

(2) Other uses which are incidental to the principal use;

(3) Signs advertising goods and services provided on the same premises;

(4) Office space used in conjunction with a principal use;

(5) Laboratories and shops incidental to the principal use; and

(6) Shops, parking, outside storage of materials, or temporary buildings incidental to the principal use.

(f) *Requirements/Performance Standard.*

Sections 71-20, schedule of district regulations, and 71-21, supplementary district regulations, shall not apply within the I-3 district, but the following requirements apply:

| | |
|---|---|
| Maximum height<br>Generally<br>If a portion of a structure is located within 250' of any district zoned for residential uses | <br>None<br>80 feet (for the portion within 250'* |

| | |
|---|---|
| Maximum lot coverage by structures, driveways and parking | 95% |
| Maximum lot coverage by structures | 75% |
| Minimum distance between detached structures | 20 feet |
| Minimum front yard setback | 40 feet |
| Minimum lot area | 20,000 square feet |
| Minimum lot depth | 100 feet |
| Minimum lot width | 100 feet |
| Minimum rear yard setback | 20 feet |
| If a portion of a development site is within 250' of any district zoned for residential uses the minimum front yard, rear yard, and side yard setbacks shall be increased to | 50 feet |
| Minimum side yard setback | 20 feet |
| If adjacent to street | 50 feet |
| Traffic visibility | Per sec. 71-21(a)(1-2) |
| Off-street loading screening | Per sec. 71-21(f-g) |
| Barbed or razor wire fences | Permitted |
| Shipping containers | Permitted, not to exceed 24 mos. Per container |

*Building Height Maximum does not apply to the following:

Decorative features which do not exceed an additional 8 ft.

Antennae or other telecommunication device which does not exceed an additional 20 ft.

Chimney or other emission devise which does not exceed an additional 20 ft.

Safety devise or other devise required by applicable law which does not exceed an additional 20 ft.

Water tower

Other accessory structure approved by Conditional Use Permit pursuant to Sec. 71-6.

(g) *Automobile parking space/loading regulations*. Section 71-22 shall not apply in the I-3 district, but the following requirements apply:

| | |
|---|---|
| (1) Off-street parking area required: | But subject to variance by the board of adjustment<br><br>*Specifications*: Min. 175 sq. ft. per space<br><br>Parking facilities shall have adequate drainage and an improved surface |
| (2) Loading dock required: | Only if routine heavy truck deliveries occur<br><br>Specifications: Min. 35' length / 12' width / 15' height |

(h) *Screening requirements.*

(1) Screening is required along portions of the front, side, and rear lot lines when these lot lines are within 250 feet of a district zoned for residential uses. Provided however that this requirement shall not apply if the residentially zoned property:

(A) was zoned residential after the date the I-3 industrial zoning district was created;

(B) is owned by the City or any entity controlled by the City; or

(C) is owned by a railroad company or any entity controlled by a railroad company.

(2) The screening shall be continuously maintained and shall be any of a solid masonry wall, a chain link fence with decorative slats, or the standard screening fence (described in ii. Below), with minimum six feet height. The screening wall or fence may have security features such as, but not limited to, barbed or razor wire. Such screening shall be located on the subject property, adjacent to the common property line. If an alley is separating the uses, the required screening shall be located on the subject property side of the alley adjacent to the property line which is adjacent to the alley.

(3) The standard screening fence that is required for screening purposes, shall be constructed with the following standards.

(A) Said fence shall be a minimum of six feet in height.

(B) All wood materials shall be naturally decay resistant or pressure treated exterior grade, such as treated pine, redwood or cedar, or other materials acceptable to the board of adjustment.

(C) All nails or fasteners shall be of non-rusting, non-corrosive metal, such as hot-dipped galvanized steel. All nails or fasteners shall be of the type (screw-shank, ring-shank or divergent-point staples) that, when properly driven, will not work free due to wind, vibration or shrinkage of members. The maximum spacing allowed between pickets shall be one-quarter inch.

(D) All materials shall be securely fastened, vertical boards to horizontal stringers, stringers to vertical posts, top rail, to ensure an ongoing attractive appearance and safe condition, free form rust, rot, vandalism and other sources of decay.

(4) Outside storage of wrecked, inoperable vehicles and equipment shall be screened by a minimum six-foot masonry wall or standard screening fence. Materials stored, excluding trucks and machinery, shall be stacked no higher than one foot below the top of the fence or wall.

(5) An exception to the screening fence requirement may be granted by the board of adjustment. Any property owner who appeared at a zoning public hearing wherein a specific screening fence requirement was imposed on a subject property under consideration will be notified of the proposed exception and date of the administrative report of said property if request for an exception of the screening fence is submitted. One or more of the following conditions must be present or apply for consideration of an exception:

(A) Topographical variations that would preclude a normal installation, or act as a screening mechanism. A topographical variation may serve as a screening device if the zoning district requiring the screening fence is separated from the adjoining use by a 30% slope or greater, as long as the elevation between the two uses is at least six feet, (property requiring the screening fence is at the higher elevation);

(B) Dense vegetation that presently exists onsite, which serves the same purpose as a screening fence. Vegetation will serve as a screening device if it is a minimum of six feet in height and the density obstructs the view; and

(C) The fence will impede proper drainage.

(i) *Landscape requirements.*

(1) *Purpose.* Landscaping requirements are intended to reduce the negative effects of glare, noise, erosion and sedimentation caused by expanses of impervious or unvegetated surfaces. These requirements are also intended to preserve and improve the natural and urban environment and enhance the aesthetic qualities of the city.

(2) *Minimum coverage Requirements.* Future developments must provide 5% of area as landscaping, per this section.

(3) *Required locations of landscaping areas.* A minimum of 50% of the required landscaping area shall be located in the front one-half of the lot based upon the front street or drive for the facility. Required landscaping shall not include driveways, paved walks or right-of-way or easements for streets or alleys.

(4) *Plant material.* Tree species shall be a minimum of seven feet overall height immediately after planting. Trees of species whose roots are known to cause damage to public roadways or other public works shall be prohibited.

(5) *Required trees.* One tree per 500 square feet of designated landscaped area is required. All trees shall be planted in the areas which are visible from the front street or drive for the facility. Trees shall not be planted in the right-of-way. Trees shall be a minimum of three-inch caliper, staked and wrapped, and shall be live oak, red oak, cedar elm, bald cypress, silver maple, Japanese black pine, palm or other trees of similar quality as approved by the board of adjustment. Yaupon, crepe myrtle and other similar trees shall not be required to be a minimum of three-inch caliper.

(6) *Existing plant materials.* In instances where healthy plant material exists on a site prior to its development, the application of the above landscaping requirements may be adjusted if such an adjustment is consistent with and will preserve the intent of this chapter.

(7) *Maintenance.* All plant material shall be maintained at all times in a living and growing condition.

(8) *Landscape plan.* A landscaping plan, demonstrating compliance with the provisions of this section, shall be submitted to the Building Official at the time of application of building permit.

(9) *Synthetic or artificial materials.* Synthetic or artificial lawn or plant material shall not be used to satisfy the requirements of the landscape requirements.

(10) *Additional requirements.* Requirements, in addition to those noted above, may be stipulated in the individual zoning districts regulations.

(11) *Special conditions.* All development shall also be subject to any other city, state or federal regulations.

(j) *No Overlay District.* Notwithstanding anything to the contrary in this Chapter 71, no overlay district shall apply to the I-3 district, specifically including, but not limited to, the Thoroughfare Overlay District in Section 71-27.

**Section 3.** The City's comprehensive plan is amended in accordance with this Ordinance.

**Section 4. Penalty.** As provided by Section 71-3 of the City Code, any person who shall violate any of the provisions of this ordinance or who shall erect or alter any building, or who shall commence to erect or alter any building in violation of any detailed statement of plan submitted or approved hereunder, shall for each violation or noncompliance be deemed guilty of a misdemeanor, and upon conviction, shall be fined as provided in Section 1-7 of the City Code. The owner of that building or premises or part thereof where anything in violation of this chapter shall be placed or shall exist, and any architect, builder contractor, agent, or corporation employed in connection therewith who may have assisted in the commission of any such violation shall be subject to the penalties herein provided.

**Section 5. Repeal.** This ordinance is intended to be cumulative and shall not repeal any provision of a previous ordinance or City Code provision, except to the extent that a provision is inconsistent and cannot be reconciled with this ordinance.

**Section 6. Severability.** In the event any clause, phrase, provision sentence, or part of this Ordinance or the application of the same to any person or circumstance for any reason be adjudged invalid or held unconstitutional by a court of competent jurisdiction, it is the intention of the City Council that the invalidity or unconstitutionality of the one or more parts shall not affect, impair, or invalidate this Ordinance as a whole or any part or provision other than the part declared to be invalid or unconstitutional; and the City Council of the City of La Marque, Texas, declares that it would have passed each and every part of the same notwithstanding the omission of any such part thus declared to be invalid or unconstitutional, whether there be one or more parts.

**Section 7. Publication and Effective Date.** This Ordinance shall be effective immediately upon adoption, public hearing in accordance with Section 2.19 of the City Charter, and publication of this ordinance or a caption that summarizes the purpose of this ordinance and the penalty for violating this ordinance in accordance with Chapter 52 of the Texas Local Government Code and Article II of the City Charter.

**PASSED AND APPROVED** by the City Council of the City of La Marque on First Reading this **10th** day of **February, 2025**; and

**PASSED, APPROVED AND ADOPTED** by the City Council of the City of La Marque on Second and Final Reading this _____ day of _____**, 2025**; and

**CITY OF LA MARQUE, TEXAS**

_____
Keith Bell, Mayor

**ATTEST:**

_____
Kierra Nance, TRMC, City Clerk

**APPROVED AS TO FORM:**

_____
Gus Knebel
Consulting City Attorney

# City of La Marque Planning & Zoning Commission

## STAFF REPORT

**Meeting Date: January 28, 2025**

**Agenda Item:** Amending Chapter 71, "Zoning," of the City of La Marque Code of Ordinances by the adoption of an I-3 "Heavy Industrial zoning district and adopting regulations applicable to this district

**Item Type: ZONE CHANGE**

**References:** City Code Chapter 71;

**Council approval:** Required, 1st and 2nd reading for final approval.

**Public comments:** None

**Recommendation:** Motion to recommend approval of amending Chapter 71, “Zoning” by adopting an I-3 Heaving Industrial Zoning District and adopting the regulations applicable to this district with additional conditions of noise abatement.

**Planning & Zoning Commission Decision:**

Motion was unanimously approved to allow the amendment of amending Chapter 71, “Zoning” by adopting an I-3 Heaving Industrial Zoning District and adopting the regulations applicable to this district with additional conditions of noise abatement.

# City of La Marque Planning & Zoning Commission

## STAFF REPORT

**Meeting Date:** December 12, 2023

**Agenda Item:** Discussion / possible action regarding amending Chapter 71, "Zoning," of the City Code of Ordinances by the adoption of an I-3 "Heavy Industrial zoning district and adopting regulations applicable. to this district.

**Item Type:** ZONING ORDINANCE

**Standard for Approval: Section 71-24 (b)**

**(3)** Formulate and recommend to the city council, for its adoption, a city plan for the orderly growth and development of the city and its environs and from time-to-time recommend such changes in the plan as it finds will facilitate the movement of people and goods, and the health, recreation, safety, and general welfare of the citizens of the city.

**(4)** Formulate a zoning plan as may be deemed best to carry out the goals of the city plan; hold public hearings and make recommendations to the city council relating to the creation, amendment, and implementation of zoning regulations and districts as provided in V.T.C.A. Local Government Code § 211.007. All powers granted under said section are specifically adopted and made a part hereof.

**References:** City Code Chapter 71-1; (71-16; I-3 Industrial)
Chapter 211, Texas Local Government Code

**Council approval:** Required

**Public comments:**

**Recommendation:**

**APPROVE:** _____ **DENY** ✓ **TABLE** _____

**VOTE TALLY:** _____**APPROVED** 4 **DENIED** _____**TABLED**

**CHAIR:** Glen F Water **DATE:** 12/12/2023

# City of La Marque Planning & Zoning Commission

## STAFF REPORT

**Meeting Date:** November 14, 2023

**Agenda Item:** Discussion / possible action regarding amending Chapter 71, "Zoning," of the City Code of Ordinances by the adoption of an I-3 "Heavy Industrial zoning district and adopting regulations applicable. to this district.

**Item Type:** ZONING ORDINANCE

**Standard for Approval: Section 71-24 (b)**

**(3)** Formulate and recommend to the city council, for its adoption, a city plan for the orderly growth and development of the city and its environs and from time-to-time recommend such changes in the plan as it finds will facilitate the movement of people and goods, and the health, recreation, safety, and general welfare of the citizens of the city.

**(4)** Formulate a zoning plan as may be deemed best to carry out the goals of the city plan; hold public hearings and make recommendations to the city council relating to the creation, amendment, and implementation of zoning regulations and districts as provided in V.T.C.A. Local Government Code § 211.007. All powers granted under said section are specifically adopted and made a part hereof.

**References:** City Code Chapter 71-1; (71-16; I-3 Industrial)
Chapter 211, Texas Local Government Code

**Council approval:** Required

**Public comments:**

**Recommendation:**

**APPROVE:** _____ **DENY** _____ **TABLE** __3____

**VOTE TALLY:** _____**APPROVED** _____ **DENIED** ___3____**TABLED.**

**CHAIR:** _____ **DATE:** 11/14/2023

## [Proposed new industrial district following the format of La Marque's I-2 zoning district]

## Sec. 71-16. I-3 Industrial

(a) *Purpose.* The I-3 district is established to accommodate heavy industrial uses, facilitate heavy industrial development and use of the district, and protect such areas from the intrusion of certain incompatible uses that might impede the development and use of such lands for heavy industrial purposes. Environmental Protection Agency and Occupational Health and Safety Administration regulations are enforceable to the extent applicable by law.

(b) *Buffer Zone.* Uses permitted in the I-3 district are subject to the following conditions:

(1) A buffer zone of at least 500 feet must be maintained between a residential district and any use permitted in the I-3 District, unless otherwise provided in this subsection (b).

(2) A buffer zone of at least 250 feet must be maintained between a commercial district and any use permitted in the I-3 District, unless otherwise provided in this subsection (b) but does not apply to any portion of a district separated by a road or highway.

(3) Any road or highway right of way is included within the calculation of the required buffer zone, even if that right of way is included within a residential or commercial district.

(4) The outside boundary of the applicable buffer zone, if any, must be fenced and reasonably landscaped with vegetation.

(5) The following uses are permitted within buffer zones:

(i) utilities;

(ii) energy transmission lines/pipelines,

(iii) after the first 20' of the buffer for a commercial buffer and the first 40' for a residential buffer, employee, customer, or contractor parking is permitted, but limited to passenger vehicle and trucks with a 1 ton capacity or less only for the next 120' ft, and without restriction thereafter (but no storage of vehicles or trailers in a buffer),

(iv) ingress and egress appurtenant to any uses permitted in subsection (c), including, but not limited to, automobile, truck or rail access to a site, or public dedicated street to or through a site (but no storage of vehicles, trailers, or rail cars in the buffer),

(v) uses permitted in C-2 zoning district or the adjacent zoning district, whichever is more permissive (and then not subject to any other limitation in L-3, but only the limitations in the applicable district);

(vi) drainage, including, but not limited to, detention (provided any detention facility must be properly maintained in clean, mowed and sanitary condition);

(vii) landscaping; and

(viii) signage.

(c) *Uses permitted.* Uses permitted in the I-3 district shall be as follows:

(1) All uses permitted by right or by conditional use in the C-1, C-2, I-1 and I-2 districts;

(2) Rail operations, including but not limited to terminals, switching and classification yards, storage yards, repair shops, roundhouses and any related support facilities;

(3) Wind, solar, battery, nitrogen, and/or hydrogen, energy generation, storage and transmission, or other types of energy generation, storage and transmission approved by Conditional Use Permit pursuant to Sec. 71-6;

(4) Carbon capture or storage;

(5) Oil & gas, hydrocarbon, petroleum or other petrochemical, limited to transportation and storage;

(6) Renewable and alternative energy enterprises;

(7) Transportation terminal activities, including but not limited to trucking, motor freight, railway or other industrial transportation;

(8) Industrial processing, services, manufacturing, fabrication, assembly, refining, warehousing, storage or distribution;

(9) Metal fabrication, manufacturing, finishing, treatment, plating, grinding, sharpening, polishing, cleaning, rustproofing, heating, stamping, extrusion, and sales if conducted within enclosed structures;

(10) Other industrial, wholesale, manufacturing, construction, or service uses which are similar in character or in furtherance of related operations like those enumerated in this subsection; and

(11) Accessory uses for any permitted use, including but not limited to the following: office, laboratories, shops, parking, outside storage of materials, or temporary buildings.

(d) *Requirements/Performance Standard.* Sections 71-20, schedule of district regulations, and 71-21, supplementary district regulations, shall not apply within the I-3 district, but the following requirements apply:

a. Max. building height (ft.)- 80*

b. Min. side yard (ft.)- 20

c. Min. rear yard (ft.)- 20

d. Min. front yard (ft.)- 40

e. Traffic visibility- Per section 71-21(a)(1-2)

f. Off-street loading screening- Per section 71-21(f-g)

g. Barbed wire fences- Permitted

h. Maximum coverage by permanent structures - 75%

i. Maximum coverage by structures, driveways, and parking- 95%

* Building Height Maximum does not apply to the following:

Decorative features which do not exceed an additional 8 ft.

Antennae or other telecommunication device which does not exceed an additional 20 ft.

Chimney or other emission devise which does not exceed an additional 20 ft.

Safety devise or other devise required by applicable law which does not exceed an additional 20 ft.

Water tower

Other accessory structure approved by Conditional Use Permit pursuant to Sec. 71-6.

(e) *Automobile parking space/loading regulations*. Section 71-22 shall not apply in the I-3 district, but the following requirements apply:

| | |
|---|---|
| a. Off-street parking area required: | .8 per employee (determined per shift), but subject to variance by the board of adjustment<br>*Specifications*: Min. 175 sq. ft. per space<br>Parking facilities shall have adequate drainage and an improved surface |
| b. Loading dock required: | Only if routine heavy truck deliveries occur-<br>*Specifications*: Min. 35' length/12' width/15' height |

(f) *Prohibited Uses*. The following uses are specifically prohibited:

(1) Nuclear power generation operations;

(2) Waste disposal, storage or recycling operations not appurtenant to a permitted use;

(3) Concrete or asphalt batch or ready-mix plant operations;

(4) Rock crushing or aggregate mining operations, but aggregate storage or terminaling for transportation or distribution is permitted;

(5) Munitions or other designed explosives use, testing or storage;

(6) Aviation, space port or other similar facilities;

(7) Mining;

(8) Junkyard, salvage or wrecking yard operations;

(9) Hog or chicken farming;

(10) Meat processing, packing or canning operations, including but not limited to fermenting, canning, slaughtering, rendering, curing, tanning or related processes;

(11) Biological or viral experimental, research or developmental or testing laboratories;

(12) Wood treating or processing plant;

(13) Pesticide manufacturing, or storage of pesticides, except storage in rail cars properly classified as goods in transit is permitted; and

(14) Open earth storage of petroleum products.

(15) Any activity or process that is likely to produce excessive odors, noises, vibrations, fumes, or other conditions which substantially interfere with the use and enjoyment of nearby properties by causing unreasonable discomfort or annoyance to persons of ordinary sensibilities attempting to use and enjoy it

(g) *Preemption*. Notwithstanding anything to the contrary in this Section 71-16, nothing herein shall regulate rail operations with respect to any matter preempted in any way by federal law or regulation.

(h) *No Overlay District.* Notwithstanding anything to the contrary in this Chapter 71, no overlay district shall apply to the I-3 district, specifically including, but not limited to, the Thoroughfare Overlay District in Section 71-27.

# ORDINANCE NO. O-2024-00

**AN ORDINANCE OF THE CITY OF LA MARQUE, TEXAS AMENDING THE CITY'S CODE OF ORDINANCES BY ADDING A HEAVY INDUSTRIAL ZONING DISTRICT AND MAKING PROVISIONS THEREFORE; PROVIDING A PENALTY IN AN AMOUNT NOT TO EXCEED $2,000 FOR EACH VIOLATION; PROVIDING AN EFFECTIVE DATE; AND MAKING OTHER PROVISIONS RELATED TO THE SUBJECT.**

**WHEREAS**, The City Council has conducted, in the time and manner required by law, a public hearing on the creation of a new heavy industrial zoning district in the City of La Marque, Texas;

**WHEREAS**, the City Council finds the proposed zoning district creation is consistent with the City's comprehensive plan, and a heavy industrial zoning district should be created in the City.

**NOW THEREFORE BE IT ORDAINED BY THE CITY COUNCIL OF THE CITY OF LA MARQUE, TEXAS THAT:**

**Section 1.** The foregoing recitals are hereby found to be true and correct and are hereby adopted by the City Council and made a part hereof for all purposes as findings of fact.

**Section 2.** Section 71-16 is added to the City's Code of Ordinances to read as follows:

**Sec. 71-16. I-3 Industrial**

(a) *Purpose*. The I-3 district is established to accommodate heavy industrial uses, facilitate heavy industrial development and use of the district, and protect such areas from the intrusion of certain incompatible uses that might impede the development and use of such lands for heavy industrial purposes. Environmental Protection Agency and Occupational Health and Safety Administration regulations are enforceable to the extent applicable by law.

(b) *Buffer Zone*. Uses permitted in the I-3 district are subject to the following conditions:

(1) A buffer zone of at least 500 feet must be maintained between a residential district and any use permitted in the I-3 District, unless otherwise provided in this subsection (b).

(2) A buffer zone of at least 250 feet must be maintained between a commercial district and any use permitted in the I-3 District, unless

otherwise provided in this subsection (b) but does not apply to any portion of a district separated by a road or highway.

(3) Any road or highway right of way is included within the calculation of the required buffer zone, even if that right of way is included within a residential or commercial district.

(4) The outside boundary of the applicable buffer zone, if any, must be fenced and reasonably landscaped with vegetation.

(5) The following uses are permitted within buffer zones:

(i) utilities;

(ii) energy transmission lines/pipelines,

(iii) after the first 20' of the buffer for a commercial buffer and the first 40' for a residential buffer, employee, customer, or contractor parking is permitted, but limited to passenger vehicle and trucks with a 1 ton capacity or less only for the next 120' ft, and without restriction thereafter (but no storage of vehicles or trailers in a buffer),

(iv) ingress and egress appurtenant to any uses permitted in subsection (c), including, but not limited to, automobile, truck or rail access to a site, or public dedicated street to or through a site (but no storage of vehicles, trailers, or rail cars in the buffer),

(v) uses permitted in C-2 zoning district or the adjacent zoning district, whichever is more permissive (and then not subject to any other limitation in L-3, but only the limitations in the applicable district);

(vi) drainage, including, but not limited to, detention (provided any detention facility must be properly maintained in clean, mowed and sanitary condition);

(vii) landscaping; and

(viii) signage.

(c) *Uses permitted.* Uses permitted in the I-3 district shall be as follows:

(1) All uses permitted by right or by conditional use in the C-1, C-2, I-1 and I-2 districts;

(2) Rail operations, including but not limited to terminals, switching and classification yards, storage yards, repair shops, roundhouses and any related support facilities;

(3) Wind, solar, battery, nitrogen, and/or hydrogen, energy generation, storage and transmission, or other types of energy generation, storage and transmission approved by Conditional Use Permit pursuant to Sec. 71-6;

(4) Carbon capture or storage;

(5) Oil & gas, hydrocarbon, petroleum or other petrochemical, limited to transportation and storage;

(6) Renewable and alternative energy enterprises;

(7) Transportation terminal activities, including but not limited to trucking, motor freight, railway or other industrial transportation;

(8) Industrial processing, services, manufacturing, fabrication, assembly, refining, warehousing, storage or distribution;

(9) Metal fabrication, manufacturing, finishing, treatment, plating, grinding, sharpening, polishing, cleaning, rustproofing, heating, stamping, extrusion, and sales if conducted within enclosed structures;

(10) Other industrial, wholesale, manufacturing, construction, or service uses which are similar in character or in furtherance of related operations like those enumerated in this subsection; and

(11) Accessory uses for any permitted use, including but not limited to the following: office, laboratories, shops, parking, outside storage of materials, or temporary buildings.

(d) *Requirements/Performance Standard.* Sections 71-20, schedule of district regulations, and 71-21, supplementary district regulations, shall not apply within the I-3 district, but the following requirements apply:

a. Max. building height (ft.)- 80*

b. Min. side yard (ft.)- 20

c. Min. rear yard (ft.)- 20

d. Min. front yard (ft.)- 40

e. Traffic visibility- Per section 71-21(a)(1-2)

f. Off-street loading screening- Per section 71-21(f-g)

g. Barbed wire fences- Permitted

h. Maximum coverage by permanent structures - 75%

i. Maximum coverage by structures, driveways, and parking- 95%

* Building Height Maximum does not apply to the following:

Decorative features which do not exceed an additional 8 ft.

Antennae or other telecommunication device which does not exceed an additional 20 ft.

Chimney or other emission devise which does not exceed an additional 20 ft.

Safety devise or other devise required by applicable law which does not exceed an additional 20 ft.

Water tower

Other accessory structure approved by Conditional Use Permit pursuant to Sec. 71-6.

(e) *Automobile parking space/loading regulations*. Section 71-22 shall not apply in the I-3 district, but the following requirements apply:

a. Off-street parking area required: .8 per employee (determined per shift), but

subject to variance by the board of adjustment

*Specifications*: Min. 175 sq. ft. per space

Parking facilities shall have adequate drainage and an improved surface

b. Loading dock required: Only if routine heavy truck deliveries occur-

*Specifications*: Min. 35' length/12' width/15' height

(f) *Prohibited Uses*. The following uses are specifically prohibited:

(1) Nuclear power generation operations;

(2) Waste disposal, storage or recycling operations not appurtenant to a permitted use;

(3) Concrete or asphalt batch or ready-mix plant operations;

(4) Rock crushing or aggregate mining operations, but aggregate storage or terminaling for transportation or distribution is permitted;

(5) Munitions or other designed explosives use, testing or storage;

(6) Aviation, space port or other similar facilities;

(7) Mining;

(8) Junkyard, salvage or wrecking yard operations;

(9) Hog or chicken farming;

(10) Meat processing, packing or canning operations, including but not limited to fermenting, canning, slaughtering, rendering, curing, tanning or related processes;

(11) Biological or viral experimental, research or developmental or testing laboratories;

(12) Wood treating or processing plant;

(13) Pesticide manufacturing, or storage of pesticides, except storage in rail cars properly classified as goods in transit is permitted; and

(14) Open earth storage of petroleum products.

(15) Any activity or process that is likely to produce excessive odors, noises, vibrations, fumes, or other conditions which substantially interfere with the use and enjoyment of nearby properties by causing unreasonable discomfort or annoyance to persons of ordinary sensibilities attempting to use and enjoy it

(g) *Preemption*. Notwithstanding anything to the contrary in this Section 71-16, nothing herein shall regulate rail operations with respect to any matter preempted in any way by federal law or regulation.

(h) *No Overlay District*. Notwithstanding anything to the contrary in this Chapter 71, no overlay district shall apply to the I-3 district, specifically including, but not limited to, the Thoroughfare Overlay District in Section 71-27.

**Section 3.** The City's comprehensive plan is amended in accordance with this Ordinance.

**Section 4. Penalty.** As provided by Section 71-3 of the City Code, any person who shall violate any of the provisions of this ordinance or who shall erect or alter any building, or who shall commence to erect or alter any building in violation of any detailed statement of plan submitted or approved hereunder, shall for each violation or noncompliance be deemed guilty of a misdemeanor, and upon conviction, shall be fined as provided in Section 1-7 of the City Code. The owner of that building or premises or part thereof where anything in violation of this chapter shall be placed or shall exist, and any architect, builder contractor, agent, or corporation employed in connection therewith who may have assisted in the commission of any such violation shall be subject to the penalties herein provided.

**Section 5. Repeal.** This ordinance is intended to be cumulative and shall not repeal any provision of a previous ordinance or City Code provision, except to the extent that a provision is inconsistent and cannot be reconciled with this ordinance.

**Section 6. Severability.** In the event any clause, phrase, provision sentence, or part of this Ordinance or the application of the same to any person or circumstance for any reason be adjudged invalid or held unconstitutional by a court of competent

jurisdiction, it is the intention of the City Council that the invalidity or unconstitutionality of the one or more parts shall not affect, impair, or invalidate this Ordinance as a whole or any part or provision other than the part declared to be invalid or unconstitutional; and the City Council of the City of La Marque, Texas, declares that it would have passed each and every part of the same notwithstanding the omission of any such part thus declared to be invalid or unconstitutional, whether there be one or more parts.

**Section 7. Publication and Effective Date.** This Ordinance shall be effective immediately upon adoption, public hearing in accordance with Section 2.19 of the City Charter, and publication of this ordinance or a caption that summarizes the purpose of this ordinance and the penalty for violating this ordinance in accordance with Chapter 52 of the Texas Local Government Code and Article II of the City Charter.

**PASSED, APPROVED AND ADOPTED** by the City Council of the City of La Marque on First Reading this _____ day of _____**, 2024**; and

**PASSED, APPROVED AND ADOPTED** by the City Council of the City of La Marque on Second and Final Reading this _____ day of _____**, 2024**; and

**CITY OF LA MARQUE, TEXAS**

_____
Keith Bell, Mayor

**ATTEST:**

_____
Kierra Nance, TRMC, City Clerk

**APPROVED AS TO FORM:**

_____
Gus Knebel
Consulting City Attorney

# CITY COUNCIL AGENDA FORM

Meeting Date: March 10, 2025
Agenda Item: 8.II.
Prepared by: Kasey Lott
Reviewed by:
Department: Development Services

**AGENDA ITEM DESCRIPTION:**
Approving the rezoning of property owned by Cotter and Alexander, LLC from Residential (R-1) and Commercial (C-1) to Light Industrial (L-1) - *Development Services* **THIS IS THE SECOND AND FINAL READING**

**STAFF BRIEFING:**
Land & Sea requested to have sections of their property rezoned to Light Industrial. This includes 8 separate parcels and each have been deliberated upon by the Planning and Zoning Commission whether to recommend the approval of the rezoning of these areas.

**HISTORY:**
12.17.2024: Planning and Zoning Commission Meeting cancelled due to No Quorum
01.28.2025: Planning and Zoning Commission Meeting - total of 8 items on agenda. 7 of 8 items were approved for the rezoning without comment. Item regarding Parcel 196069 was not passed as there was concern of 4 residential units in the area.
02.10.2025: First reading of Ordinance at Council - MOTION PASSED UNANIMOUSLY
03.10.2025: Second reading of Ordinance at Council

**FISCAL IMPACT:**
N/A

**ORDINANCE NO. O-2025-00**

**AN ORDINANCE OF THE CITY OF LA MARQUE, TEXAS AMENDING THE CITY'S ZONING MAP AND COMPREHENSIVE PLAN BY CHANGING THE ZONING REGULATIONS OF REAL PROPERTY COMMONLY KNOWN AS 1900 OAK STREET; 429 PEAR STREET; 431 PEAR STREET; 318 PLUM STREET; 311 PLUM STREET; 2001 OAK STREET; 2119 OAK STREET; ANA PART OF AN ABAONDONED ALLEY AND RIGHT OF WAY ADJACENT BLOCK 50 (5000-2) DIVISION K COOOK $ STEWART SBUDVISION OUT OF THE JD MOORE SURVEY, ABSTRACT 150 GALVESTON COUNTY CAD PARCEL ID 606243 PROVIDING A PENALTY IN AN AMOUNT NOT TO EXCEED $2,000 FOR EACH VIOLATION; PROVDING AND EFFECTIVE DATE; AND MAKING OTHER PROVISIONS RELATED TO THE SUBJECT.**

**WHEREAS**, The Owner of the following tracts of land:

1. being lots Eight (8), Nine (9), Ten (10), and Eleven (11), Block 43 Division K Cook & Stewart Subdivision out of the JD Moore Survey, Abstract 150; Parcel ID No. 196059, 1900 Oak St., La Marque, TX
2. being lots Five (5) and Six (6), Block 43, Division K Cook & Stewart Subdivision out of the JD Moore Survey, Abstract 150; Parcel ID No. 196060, 429 Pear St., La Marque, TX
3. being lot Seven (7), Block 43, Division K Cook & Stewart Subdivision out of the JD Moore Survey, Abstract 150; Parcel ID No. 196061, 431 Pear St., La Marque, TX;
4. being lots Six (6), Seven (7), Eight (8), and Nine (9), and West Part of lots Five (5) and Ten (10), Block 44, Division K Cook & Stewart Subdivision out of the JD Moore Survey, Abstract 150; Parcel ID No. 196069, 318 Plum St., La Marque, TX;
5. being lots One (1), Two (2), Three (3), Four (4), Five (5), Six (6), Seven(7), Eight (8), Nine (9), Ten (10), Eleven (11), Twelve (12), Thirteen (13), and Fourteen (14), as well as one half (1/2) of Adjacent Alley and West one half (1/2) 4th Avenue (Tract 1: Block 49, of Division K, of Cook and Stewart Subdivision of the John D. Moore League, a subdivision in Galveston County, Texas, according to the map or plat thereof recorded in Volume 81, Page 256 together with the 20-foot alley lying within said Block abandoned by Ordinance recorded in Volume 2833, Page 852, in Office of the County Clerk of Galveston County, Texas), and Adjacent Part of Prune St. (Tract 2: A tract of land out of a portion of Prune Street 80 foot wide right of way lying South of Block 50 lying East of the G.H.&H. Railroad right of way and North of Block 56, all in Subdivision K of the Cook and Stewart Subdivision in Galveston County, Texas, according to the map or plat

thereof recorded in Volume 81, Page 526 in the Office of the County Clerk of Galveston County, Texas, and being more particularly described by metes and bounds), Block 49, Division K Cook & Stewart Subdivision out of the JD Moore Survey, Abstract 150; Parcel ID No. 196060, 311 Plum St., La Marque, TX;

6. being Part of Block 50 (5000–1), Division K Cook & Stewart Subdivision out of the JD Moore Survey, Abstract 150; Parcel ID No. 196096, 2001 Oak St. Pear St., La Marque, TX;
7. being Block 56 (5600-1), Division K Cook & Stewart Subdivision out of the JD Moore Survey, Abstract 150; Parcel ID No. 196116, 2119 Oak St., La Marque, TX; and
8. being Part of Abandoned Alley and Row Adjacent Block 50 (5000-2), Division K Cook & Stewart Subdivision out of the JD Moore Survey, Abstract 150; Parcel ID No. 606243.

Collectively (the "Property")

**WHEREAS**, the City Council has received and reviewed the Planning and Zoning Commission report on the requested rezoning of the Property.

**WHEREAS**, The City Council has conducted, in the time and manner required by law, a public hearing on the proposal to change the zoning for the Property.

**WHEREAS**, the City Council finds the proposed change in zoning district is consistent with the City's comprehensive plan, and the comprehensive plan and zoning map of the City should be amended.

**NOW THEREFORE BE IT ORDAINED BY THE CITY COUNCIL OF THE CITY OF LA MARQUE, TEXAS THAT:**

**Section 1.** The foregoing recitals are hereby found to be true and correct and are hereby adopted by the City Council and made a part hereof for all purposes as findings of fact.

**Section 2.** That the adopted zoning map of the City is amended by changing the zoning district applicable to the Property to Light Industrial (L-I).

**Section 3**. The City's comprehensive plan is amended in accordance with this Ordinance.

**Section 4. Penalty.** As provided by Section 71-3 of the City Code, any person who shall violate any of the provisions of this ordinance or who shall erect or alter any building, or who shall commence to erect or alter any building in violation of any detailed statement of plan submitted or approved hereunder, shall for each violation or noncompliance be deemed guilty of a misdemeanor, and upon conviction, shall be fined as provided in Section 1-7 of the City Code. The owner of that building or premises or part thereof where anything in violation of this chapter shall be placed or shall exist, and any architect, builder contractor, agent, or corporation employed in connection therewith who may have assisted in the commission of any such violation shall be subject to the penalties herein provided.

**Section 5. Repeal.** This ordinance is intended to be cumulative and shall not repeal any provision of a previous ordinance or City Code provision, except to the extent that a provision is inconsistent and cannot be reconciled with this ordinance.

**Section 6. Severability.** In the event any clause, phrase, provision sentence, or part of this Ordinance or the application of the same to any person or circumstance for any reason be adjudged invalid or held unconstitutional by a court of competent jurisdiction, it is the intention of the City Council that the invalidity or unconstitutionality of the one or more parts shall not affect, impair, or invalidate this Ordinance as a whole or any part or provision other than the part declared to be invalid or unconstitutional; and the City Council of the City of La Marque, Texas, declares that it would have passed each and every part of the same notwithstanding the omission of any such part thus declared to be invalid or unconstitutional, whether there be one or more parts.

**Section 7. Publication and Effective Date.** This Ordinance shall be effective immediately upon adoption, after public hearing in accordance with Section 2.19 of the City Charter, and publication of this ordinance or a caption that summarizes the purpose of this ordinance and the penalty for violating this ordinance in accordance with Chapter 52 of the Texas Local Government Code and Article II of the City Charter.

**PASSED AND APPROVED** by the City Council of the City of La Marque on First Reading this **10th** day of **February**, **2025**; and

**PASSED, APPROVED AND ADOPTED** by the City Council of the City of La Marque on Second and Final Reading this _____ day of _____**, 2025**; and

**CITY OF LA MARQUE, TEXAS**

_____

Keith Bell, Mayor

**ATTEST:**

_____

Kierra Nance, TRMC, City Clerk

**APPROVED AS TO FORM:**

_____

Gus Knebel

Consulting City Attorney

# City of La Marque Planning & Zoning Commission

## STAFF REPORT

**Meeting Date: January 28, 2025**

**Agenda Item:** Cotter and Alexander, LLC request to re-zone from C-1 (Commercial) to L-1 (Light Industrial), being Part of Abandoned Alley and Row Adjacent Block 50 (5000-2), Division K Cook & Stewart Subdivision out of the JD Moore Survey, Abstract 150; Parcel ID No. 606243

**Item Type:** ZONE CHANGE

**Standard for Approval:** Either the general welfare of the city affected by the area to be changed will be enhanced, or that the property is unusable for the purposes allowed under existing zoning." See City Code Sec. 71-26(k)

**References:** City Code Chapter 71;
Chapter 212, Texas Local Government Code

**Council approval:** Required, 1st and 2nd reading for final approval.

**Public comments:** None

**Recommendation:** Motion to recommend approval of a zone change from C-1 (Commercial) to L-1 (Light Industrial), being Part of Abandoned Alley and Row Adjacent Block 50 (5000-2), Division K Cook & Stewart Subdivision out of the JD Moore Survey, Abstract 150; Parcel ID No. 606243

**Planning & Zoning Commission Decision:**

Motion was unanimously approved to a re-zone from C-1 (Commercial) to L-1 (Light Industrial), being Part of Abandoned Alley and Row Adjacent Block 50 (5000-2), Division K Cook & Stewart Subdivision out of the JD Moore Survey, Abstract 150; Parcel ID No. 606243

(Galveston County Property ID # 606243)

# City of La Marque Planning & Zoning Commission

## STAFF REPORT

**Meeting Date: January 28, 2025**

**Agenda Item:** Cotter and Alexander, LLC request to re-zone from R-1 (Residential) to L-1 (Light Industrial), being Block 56 (5600-1), Division K Cook & Stewart Subdivision out of the JD Moore Survey, Abstract 150; Parcel ID No. 196116, 2119 Oak St., La Marque, TX

**Item Type:** ZONE CHANGE

**Standard for Approval:** Either the general welfare of the city affected by the area to be changed will be enhanced, or that the property is unusable for the purposes allowed under existing zoning." See City Code Sec. 71-26(k)

**References:** City Code Chapter 71;
Chapter 212, Texas Local Government Code

**Council approval:** Required, 1st and 2nd reading for final approval.

**Public comments:** None

**Recommendation:** Motion to recommend approval of a zone change from R-1 (Residential) to L-1 (Light Industrial), being Block 56 (5600-1), Division K Cook & Stewart Subdivision out of the JD Moore Survey, Abstract 150; Parcel ID No. 196116, Street Address: 2119 Oak St., La Marque, TX

**Planning & Zoning Commission Decision:**

Motion was unanimously approved to a re-zone from R-1 (Residential) to L-1 (Light Industrial), being Block 56 (5600-1), Division K Cook & Stewart Subdivision out of the JD Moore Survey, Abstract 150; Parcel ID No. 196116, Street Address: 2119 Oak St., La Marque, TX

(Galveston County Property ID # 196116)

# City of La Marque Planning & Zoning Commission

## STAFF REPORT

**Meeting Date: January 28, 2025**

**Agenda Item:** Cotter and Alexander, LLC request to re-zone from C-1 (Commercial) to L-1 (Light Industrial), being Part of Block 50 (5000–1), Division K Cook & Stewart Subdivision out of the JD Moore Survey, Abstract 150; Parcel ID No. 196096, 2001 Oak St., La Marque, TX

**Item Type:** ZONE CHANGE

**Standard for Approval:** Either the general welfare of the city affected by the area to be changed will be enhanced, or that the property is unusable for the purposes allowed under existing zoning." See City Code Sec. 71-26(k)

**References:** City Code Chapter 71;
Chapter 212, Texas Local Government Code

**Council approval:** Required, 1st and 2nd reading for final approval.

**Public comments:** None

**Recommendation:** Motion to recommend approval of a zone change from C-1 (Commercial) to L-1 (Light Industrial), being Part of Block 50 (5000–1), Division K Cook & Stewart Subdivision out of the JD Moore Survey, Abstract 150; Parcel ID No. 196096, Street Address: 2001 Oak St., La Marque, TX

**Planning & Zoning Commission Decision:**

Motion was unanimously approved to a re-zone from C-1 (Commercial) to L-1 (Light Industrial), being Part of Block 50 (5000–1), Division K Cook & Stewart Subdivision out of the JD Moore Survey, Abstract 150; Parcel ID No. 196096, Street Address: 2001 Oak St., La Marque, TX

(Galveston County Property ID # 196096)

# City of La Marque Planning & Zoning Commission

## STAFF REPORT

**Meeting Date: January 28, 2025**

**Agenda Item:** Cotter and Alexander, LLC request to re-zone from R-1 (Residential) to L-1 (Light Industrial), being lots One (1), Two (2), Three (3), Four (4), Five (5), Six (6), Seven (7), Eight (8), Nine (9), Ten (10), Eleven (11), Twelve (12), Thirteen (13), and Fourteen (14), as well as one half (1/2) of Adjacent Alley and West one half (1/2) 4th Avenue (Tract 1: Block 49, of Division K, of Cook and Stewart Subdivision of the John D. Moore League, a subdivision in Galveston County, Texas, according to the map or plat thereof recorded in Volume 81, Page 256 together with the 20-foot alley lying within said Block abandoned by Ordinance recorded in Volume 2833, Page 852, in Office of the County Clerk of Galveston County, Texas), and Adjacent Part of Prune St. (Tract 2: A tract of land out of a portion of Prune Street 80 foot wide right of way lying South of Block 50 lying East of the G.H.&H. Railroad right of way and North of Block 56, all in Subdivision K of the Cook and Stewart Subdivision in Galveston County, Texas, according to the map or plat thereof recorded in Volume 81, Page 526 in the Office of the County Clerk of Galveston County, Texas, and being more particularly described by metes and bounds), Block 49, Division K Cook & Stewart Subdivision out of the JD Moore Survey, Abstract 150; Parcel ID No. 196060, 311 Plum St., La Marque, TX

**Item Type:** ZONE CHANGE

**Standard for Approval:** Either the general welfare of the city affected by the area to be changed will be enhanced, or that the property is unusable for the purposes allowed under existing zoning." See City Code Sec. 71-26(k)

**References:** City Code Chapter 71;
Chapter 212, Texas Local Government Code

**Council approval:** Required, 1st and 2nd reading for final approval.

**Public comments:** None

**Recommendation:** Motion to recommend approval of a zone change from (R-1 (Residential) to L-1 (Light Industrial), being lots One (1), Two (2), Three (3), Four (4), Five (5), Six (6), Seven (7), Eight (8), Nine (9), Ten (10), Eleven (11), Twelve (12), Thirteen (13), and Fourteen (14), as well as one half (1/2) of Adjacent Alley and West one half (1/2) 4th Avenue (Tract 1: Block 49, of Division K, of Cook and Stewart Subdivision of the John D. Moore League, a subdivision in Galveston County, Texas, according to the map or plat thereof recorded in

(Galveston County Property ID # 196060)

Volume 81, Page 256 together with the 20-foot alley lying within said Block abandoned by Ordinance recorded in Volume 2833, Page 852, in Office of the County Clerk of Galveston County, Texas), and Adjacent Part of Prune St. (Tract 2: A tract of land out of a portion of Prune Street 80 foot wide right of way lying South of Block 50 lying East of the G.H.&H. Railroad right of way and North of Block 56, all in Subdivision K of the Cook and Stewart Subdivision in Galveston County, Texas, according to the map or plat thereof recorded in Volume 81, Page 526 in the Office of the County Clerk of Galveston County, Texas, and being more particularly described by metes and bounds), Block 49, Division K Cook & Stewart Subdivision out of the JD Moore Survey, Abstract 150; Parcel ID No. 196060, Street Address: 311 Plum St., La Marque, TX

**Planning & Zoning Commission Decision:**

Motion was unanimously approved to a re-zone from (R-1 (Residential) to L-1 (Light Industrial), being lots One (1), Two (2), Three (3), Four (4), Five (5), Six (6), Seven (7), Eight (8), Nine (9), Ten (10), Eleven (11), Twelve (12), Thirteen (13), and Fourteen (14), as well as one half (1/2) of Adjacent Alley and West one half (1/2) 4th Avenue (Tract 1: Block 49, of Division K, of Cook and Stewart Subdivision of the John D. Moore League, a subdivision in Galveston County, Texas, according to the map or plat thereof recorded in Volume 81, Page 256 together with the 20-foot alley lying within said Block abandoned by Ordinance recorded in Volume 2833, Page 852, in Office of the County Clerk of Galveston County, Texas), and Adjacent Part of Prune St. (Tract 2: A tract of land out of a portion of Prune Street 80 foot wide right of way lying South of Block 50 lying East of the G.H.&H. Railroad right of way and North of Block 56, all in Subdivision K of the Cook and Stewart Subdivision in Galveston County, Texas, according to the map or plat thereof recorded in Volume 81, Page 526 in the Office of the County Clerk of Galveston County, Texas, and being more particularly described by metes and bounds), Block 49, Division K Cook & Stewart Subdivision out of the JD Moore Survey, Abstract 150; Parcel ID No. 196060, Street Address: 311 Plum St., La Marque, TX

(Galveston County Property ID # 196060)

# City of La Marque Planning & Zoning Commission

## STAFF REPORT

**Meeting Date: January 28, 2025**

**Agenda Item:** Cotter and Alexander, LLC request to re-zone from R-1 (Residential) to L-1 (Light Industrial), being lots Six (6), Seven (7), Eight (8), and Nine (9), and West Part of lots Five (5) and Ten (10), Block 44, Division K Cook & Stewart Subdivision out of the JD Moore Survey, Abstract 150; Parcel ID No. 196069, 318 Plum St., La Marque, TX

**Item Type:** ZONE CHANGE

**Standard for Approval:** Either the general welfare of the city affected by the area to be changed will be enhanced, or that the property is unusable for the purposes allowed under existing zoning." See City Code Sec. 71-26(k)

**References:** City Code Chapter 71;
Chapter 212, Texas Local Government Code

**Council approval:** Required, 1st and 2nd reading for final approval.

**Public comments:** None

**Recommendation:** Motion to recommend declining of a zone change from (R-1 (Residential) to L-1 (Light Industrial), being lots Six (6), Seven (7), Eight (8), and Nine (9), and West Part of lots Five (5) and Ten (10), Block 44, Division K Cook & Stewart Subdivision out of the JD Moore Survey, Abstract 150; Parcel ID No. 196069, Street Address: 318 Plum St., La Marque, TX

**Commissioner Bradley Stephenson noted there are 4 residential homes located in the area and these homeowners could be negatively affected by a rezoning.

**Planning & Zoning Commission Decision:**

Motion was unanimously approved to decline a re-zone from (R-1 (Residential) to L-1 (Light Industrial), being lots Six (6), Seven (7), Eight (8), and Nine (9), and West Part of lots Five (5) and Ten (10), Block 44, Division K Cook & Stewart Subdivision out of the JD Moore Survey, Abstract 150; Parcel ID No. 196069, Street Address: 318 Plum St., La Marque, TX

(Galveston County Property ID # 196069)

# City of La Marque Planning & Zoning Commission

## STAFF REPORT

**Meeting Date: January 28, 2025**

**Agenda Item:** Cotter and Alexander, LLC request to re-zone from R-1 (Residential) to L-1 (Light Industrial), being lot Seven (7), Block 43, Division K Cook & Stewart Subdivision out of the JD Moore Survey, Abstract 150; Parcel ID No. 196061, 431 Pear St., La Marque, TX

**Item Type: ZONE CHANGE**

**Standard for Approval:** Either the general welfare of the city affected by the area to be changed will be enhanced, or that the property is unusable for the purposes allowed under existing zoning." See City Code Sec. 71-26(k)

**References:** City Code Chapter 71;
Chapter 212, Texas Local Government Code

**Council approval:** Required, 1st and 2nd reading for final approval.

**Public comments:** None

**Recommendation:** Motion to recommend approval of a zone change from (R-1 (Residential) to L-1 (Light Industrial), being lot Seven (7), Block 43, Division K Cook & Stewart Subdivision out of the JD Moore Survey, Abstract 150; Parcel ID No. 196061, Street Address: 431 Pear St., La Marque, TX

**Planning & Zoning Commission Decision:**

Motion was unanimously approved to allow a re-zone from (R-1 (Residential) to L-1 (Light Industrial), being lot Seven (7), Block 43, Division K Cook & Stewart Subdivision out of the JD Moore Survey, Abstract 150; Parcel ID No. 196061, Street Address: 431 Pear St., La Marque, TX

(Galveston County Property ID # 196059)

# City of La Marque Planning & Zoning Commission

## STAFF REPORT

**Meeting Date: January 28, 2025**

**Agenda Item:** Cotter and Alexander, LLC request to re-zone from R-1 (Residential) to L-1 (Light Industrial), being lots Five (5) and Six (6), Block 43, Division K Cook & Stewart Subdivision out of the JD Moore Survey, Abstract 150; Parcel ID No. 196060, 429 Pear St., La Marque, TX

**Item Type: ZONE CHANGE**

**Standard for Approval:** Either the general welfare of the city affected by the area to be changed will be enhanced, or that the property is unusable for the purposes allowed under existing zoning." See City Code Sec. 71-26(k)

**References:** City Code Chapter 71;
Chapter 212, Texas Local Government Code

**Council approval:** Required, 1st and 2nd reading for final approval.

**Public comments:** None

**Recommendation:** Motion to recommend approval of a zone change from (R-1 (Residential) to L-1 (Light Industrial), being lots Five (5) and Six (6), Block 43, Division K Cook & Stewart Subdivision out of the JD Moore Survey, Abstract 150; Parcel ID No. 196060, Street Address: 429 Pear St., La Marque, TX

**Planning & Zoning Commission Decision:**

Motion was unanimously approved to allow a re-zone from (R-1 (Residential) to L-1 (Light Industrial), being lots Five (5) and Six (6), Block 43, Division K Cook & Stewart Subdivision out of the JD Moore Survey, Abstract 150; Parcel ID No. 196060, Street Address: 429 Pear St., La Marque, TX

(Galveston County Property ID # 196059)

# City of La Marque Planning & Zoning Commission

## STAFF REPORT

**Meeting Date: January 28, 2025**

**Agenda Item:** Cotter and Alexander, LLC request to re-zone from C-1 (Commercial) to L-1 (Light Industrial), being lots Eight (8), Nine (9), Ten (10), and Eleven (11), Block 43, Division K Cook & Stewart Subdivision out of the JD Moore Survey, Abstract 150; Parcel ID No. 196059, 1900 Oak St., La Marque, TX

**Item Type: ZONE CHANGE**

**Standard for Approval:** Either the general welfare of the city affected by the area to be changed will be enhanced, or that the property is unusable for the purposes allowed under existing zoning." See City Code Sec. 71-26(k)

**References:** City Code Chapter 71;
Chapter 212, Texas Local Government Code

**Council approval:** Required, 1st and 2nd reading for final approval.

**Public comments:** None

**Recommendation:** Motion to recommend approval of a zone change from (C-1) Commercial to (L-1) Light Industrial, being lots Eight (8), Nine (9), Ten (10), and Eleven (11), Block 43, Division K Cook & Stewart Subdivision out of the JD Moore Survey, Abstract 150; Parcel ID No. 196059, Street address: 1900 Oak St., La Marque, TX 77568

**Planning & Zoning Commission Decision:**

Motion was unanimously approved to allow a re-zone from (C-1) Commercial to (L-1) Light Industrial, being lots Eight (8), Nine (9), Ten (10), and Eleven (11), Block 43, Division K Cook & Stewart Subdivision out of the JD Moore Survey, Abstract 150; Parcel ID No. 196059, Street address: 1900 Oak St., La Marque, TX 77568

(Galveston County Property ID # 196059)

# CITY COUNCIL AGENDA FORM

Meeting Date: March 10, 2025
Agenda Item: 8.III.
Prepared by:
Reviewed by:
Department: Administration

**AGENDA ITEM DESCRIPTION:**
Setting a limit on the number of hours an elected official can access the city attorney's services without council approval - *Legal/Finance*

**STAFF BRIEFING:**
It has been determined that there has been an increase in legal billing over the last 12 months. In an effort to be good stewards of the city's budget, a request is being made to the council to consider establishing a framework around their legal spending.

**HISTORY:**
02.24.2025 - Item tabled

**FISCAL IMPACT:**
unknown

# Boards and Commissions Terms for Reappointment

- Mayor Appointments
  - Ordinance Review - VACANT
- District A Appointments
  - Board of Adjustment – Alexa Cross **Up for appointment**
  - Building Standards Commission (Alternate) - VACANT
  - Ordinance Review – VACANT
  - Planning & Zoning - VACANT
- District B Appointments
  - Building Standards – Kaleb Smith** Moved away as of February 2025
  - Economic Development Corporation – VACANT (B. Hocking stepped down)
  - KLMBC (Alternate) - VACANT
  - Parks – Tamera Smith** Moved away as of February 2025
  - Ordinance Review - VACANT
- District C Appointments
  - Board of Adjustments – Ariel Nixon Guillory **Up for appointment**
  - Building Standards – Maggie Manuel ** Up for appointment**
  - Cemetery – Joel Camacho **Up for appointment**
  - Planning & Zoning – Greg Cornett **Up for appointment**
  - Ordinance Review - VACANT
- District D Appointments
  - Board of Adjustments – Shelia Brown (Alternate) **Up for appointment**
  - Cemetery – Mardella Park **
  - Planning & Zoning – Alan Waters** (passed away February 2025)

# APPLICATIONS ON FILE

- Board of Adjustments

- Building Standards
    - Scott Moon
    - William Fossier Jr
    - Rashun Fontenot
    - Kathy Kidd
    - Marima Gutierrez (Secondary)
    - Abril Rubio (Secondary)

- Charter Review
    - Terry Taylor

- Civil Service
    - Larinda Essary
    - Shawntale Woodland (Secondary)
    - William Fossier Jr. (Secondary)
    - Rashad Davis (Secondary)
    - Carla Jefferson (Secondary)

- Cemetery
    - Terry Taylor
    - Michael Pruden (Secondary)

- Economic Development
    - Stephanie Gordon
    - Rashad Davis
    - Jeremy Silva
    - Toriana Johnson
    - Tykisha Murphy
    - Kelley Woods
    - Marima Gutierrez
    - Greg Cornett
    - Ikeysha Lewis
    - Philip Sukal
    - Sade Williams (Secondary)
    - Kathy Kidd (Secondary)
    - Scott Moon (Secondary)
    - Rashun Fontenot (Secondary)
    - Heather McMillian (Secondary)
    - Jared Williams (Secondary)

- Keep La Marque Beautiful
    - Cathy Wall
    - Rashun Fontenot
    - Abril Rubio
    - Sade Williams
    - Larinda Essary (Secondary)
    - Kimberly Phillips (Secondary)
    - Ikeysha Lewis (Secondary)
    - Ronald Caraway (Secondary)
    - Michael Porter (Secondary)

- Parks
    - Michael Pruden
    - Allen Honish
    - Rashun Fontenot (Secondary)
    - Cathy Wall (Secondary)

- Planning & Zoning
    - Heather McMillian
    - Carla Jefferson
    - Jared Williams
    - Michael Porter
    - Allen Honish (Secondary)
    - Toriana Johnson (Secondary)
    - Tykisha Murphy (Secondary)
    - Stephanie Gordon (Secondary)
    - Jeremy Silva (Secondary)
    - Terry Taylor (Secondary)
    - Greg Cornett (Secondary)
    - Philip Sukal (Secondary)

# CITY COUNCIL AGENDA FORM

Meeting Date: March 10, 2025
Agenda Item: 9.I.
Prepared by: Cesar Garcia
Reviewed by: Cesar Garcia, City Manager
Department: Public Works

**AGENDA ITEM DESCRIPTION:**

Amending the Code of Ordinances of City of La Marque, Texas by amending Chapter 42, "Impact Fees"; Providing rules and regulations governing the same within the city; Making other provisions related to the subject and providing an effective date - *Engineering* **THIS IS THE FIRST READING**

**STAFF BRIEFING:**

Amending the Code of Ordinances of City of La Marque, Texas by amending Chapter 42, "Impact Fees"; Providing rules and regulations governing same within the city; Making other provisions related to the subject and providing an effective date

**HISTORY:**

- Nov 14, 2023 - Impact Fee Advisory Committee approved the Land Use Assumptions and Capital Improvements Plan.
- Jan 8, 2024 - ADICO Engineering presented their findings to the council
- Jan 22, 2024 - City Council Acknowledged Receipt of Land Use Assumptions (LUA) and Capital Improvements Plan (CIP) & Set a date for the Public Hearing
- Feb 2, 2024 - Public Hearing for LUA and CIP & Approval of LUA and CIP
- June 24, 2024 - City Council Acknowledge Receipt of Impact Fee Study, approved the 2023 study & Set Public Hearing Date of August 26, 2024 for Impact Fee Study
- Aug 26. 2024 - Impact Fee Study Items Pulled From Agenda due to lack of sufficient time for advertising for Public Hearing
- Oct 14, 2024 - Impact Fee Study Public Hearing & City Council Approval of Impact Fee Study

**FISCAL IMPACT:**

**ORDINANCE NO. O-2024-00[ ]**

**AN ORDINANCE OF THE CITY OF LA MARQUE, TEXAS AMENDING THE CODE OF ORDINANCES OF CITY OF LA MARQUE, TEXAS, BY AMENDING CHAPTER 42, " IMPACT FEES;" PROVIDING RULES AND REGULATIONS GOVERNING SAME WITHIN THE CITY; MAKING OTHER PROVISIONS RELATED TO THE SUBJECT, AND PROVIDING AN EFFECTIVE DATE.**

**WHEREAS**, Texas Local Government Code§ 395.001 et seq., authorizes cities to enact or impose impact fees on land within their corporate boundaries, as charges or assessments imposed against new development in order to generate revenue for funding or recouping the costs of capital improvements or facility expansions necessitated by and attributable to such new development;

**WHEREAS**, the City Council of the City of La Marque (the "City") appointed the Planning and Zoning Commission as the advisory committee ("Impact Fees Advisory Committee") to study the land use assumptions, capital improvements plan and implementation of impact fees within certain areas of the City;

**WHEREAS**, the City Council has employed Adico Consulting Engineers, LLC to prepare its land use assumptions, capital improvements plan, and impact fees for water and wastewater facilities for the City;

**WHEREAS**, each was considered by the City's Planning and Zoning Committee acting as the City's Impact Fees Advisory Committee, and such assumptions, plan, and proposed fees were filed with the City Council, along with the Impact Fees Advisory Committee's comments;

**WHEREAS,** the City Council has reviewed and evaluated its land use assumptions, capital improvements plan, and impact fees for water and wastewater facilities in the time and manner required by law;

**WHEREAS,** consistent with input from the Planning and Zoning Commission, the citizens, and the City Council, City staff and consultants have updated the City's Land Use Assumptions and Capital Improvements Plan and calculated a resulting impact fee contained in Exhibit A, attached and made a part hereof for all purposes;

**WHEREAS**, the City Council held public hearings on the city's Land Use Assumptions, Capital Improvements Plan and proposed impact fees on February 2nd, 2024 and _____ _____, 2024 and provided notice of such hearings by publication in a newspaper of general circulation before the 30th day before the date of the hearing and otherwise in accordance with Section 395.044 of the Texas Local Government Code;

**WHEREAS,** the City Council adopted the land use assumptions and capital improvement plan on February 2nd , 2024 and now desires to amend impact fees for water and wastewater facilities, all in accordance with Chapter 395, of the Texas Local Government Code; and

**WHEREAS,** the City has determined that it is in the best interest of the general public to amend impact fees for water and wastewater facilities;

**NOW THEREFORE, BE IT ORDAINED BY THE CITY COUNCIL OF THE CITY OF LA MARQUE, TEXAS, THAT:**

**Section 1.** The findings and recitals set out in the preamble to this Ordinance are found to be true and correct and they are hereby adopted by the City Council and made a part hereof for all purposes.

**Section 2.** Chapter 42 of The Code of Ordinances of the City of La Marque, Texas is hereby amended to read as follows:

**Section 42-2. Purpose.**

This article is intended to impose and levy water and wastewater facilities impact fees on new development, as established in this article, in order to finance public facilities, the demand for which is generated by new development in the designated service areas. The designated services areas are as shown in the attached Exhibit A.

**Section 42-4. Land Use Assumptions.**

The land use assumptions included in the Water and Wastewater Impact Fee Study, referenced herein as Exhibit A and made a part hereof for all purposes, are hereby in all things approved and adopted.

**Section 42-5. Capital Improvements Plan.**

The capital improvements plan included in the Water and Wastewater Impact Fee Study, referenced herein as Exhibit A and made a part hereof for all purposes, are hereby in all things approved and adopted.

**Section 42.6 Impact Fees.**

(a) The impact fees set forth in the Water and Wastewater Impact Fee Study, referenced herein as Exhibit A and made a part hereof for all purposes are hereby levied against new development on lands located within the corporate boundaries of the city.

(b) For new development which is platted in accordance with the City's subdivision regulations before the adoption of this article, an impact fee may not be collected on any service unit for which a valid building permit is issued within one year after the date of adoption of the impact fee.

**Section 3. Severability.** In the event any clause, phrase, provision sentence, or part of this Ordinance or the application of the same to any person or circumstance for any reason be adjudged invalid or held unconstitutional by a court of competent jurisdiction, it is the intention of the City Council that the invalidity or unconstitutionality of the one or more parts shall not affect, impair, or invalidate this Ordinance as a whole or any part or provision other than the part declared to be invalid or unconstitutional; and the City Council of the City of La Marque, Texas, declares that it would have passed each and every part of the same notwithstanding the omission of any such part thus declared to be invalid or unconstitutional, whether there be one or more parts.

**Section 4. Publication and Effective Date.** This Ordinance shall be effective immediately after final passage by City Council, a public hearing in accordance with Section 2.19 of the City Charter, and publication of this ordinance or a caption that summarizes the purpose of this ordinance.

**PASSED AND APPROVED** by the City Council of the City of La Marque on First Reading this _____ day of _____**, 2024**; and

**PASSED, APPROVED, AND ADOPTED** by the City Council of the City of La Marque on Second and Final Reading this _____ day of _____**, 2024**.

***** SIGNATURES ON NEXT PAGE *****

**[REMAINDER OF PAGE INTENTIONALLY BLANK]**

**CITY OF LA MARQUE, TEXAS**

_____

Keith Bell, Mayor

**ATTEST:**

_____

Kierra Nance, TRMC, City Clerk

**APPROVED AS TO FORM:**

_____

Gus Knebel, Consulting City Attorney

# IMPACT FEE STUDY

**FOR**

## WATER AND WASTEWATER

## 2023 UPDATE

## LA MARQUE, TEXAS

**ADICO PROJECT NO. 23100-02**
**DECEMBER 2023**

**TBPE FIRM NO. 16423**
**2114 EL DORADO BLVD., SUITE 400**
**FRIENDSWOOD, TX 77546**
**PH: 832-895-1093**

# IMPACT FEE STUDY FOR WATER AND WASTEWATER 2023 UPDATE
# CITY OF LA MARQUE

## DECEMBER 2023

**ADVISORY COMMITTEE**

Alan Waters
Greg Cornett
Chris Colombo
Graylan Alexander
Brad Stephenson

**CITY COUNCIL**

Keith Bell – Mayor
Kimberley Yancy – District A
Joe Compian – District B
VACANT – District C
James Ross – District D

**STAFF**

Cesar Garcia – City Manager
Rick Sailler – Public Works Director
Kathleen VanStavern – Development Services Director
Alex Getty – Economic Development Corporation Director

# TABLE OF CONTENTS

***1. INTRODUCTION*** 5

1.1 HISTORY 5

1.2 STATE LAW PERTAINING TO IMPACT FEES 5

***2. SERVICE AREA*** 6

***3. LAND USE ASSUMPTIONS AND POPULATION PROJECTIONS*** 6

3.1 LAND USE ASSUMPTIONS 6

3.2 PREVIOUS PERIOD DEVELOPMENTS 6

3.3 BASE DATA 7

3.4 POPULATION PROJECTION 7

3.5 HOUSING STARTS 8

3.6 TEN YEAR GROWTH ASSUMPTIONS 9

3.7 ULTIMATE POPULATION PROJECTIONS 9

3.8 LAND USE ASSUMPTIONS SUMMARY 11

***4. CAPITAL IMPROVEMENT PLAN*** 12

4.1 ELIGIBLE FACILITIES 12

4.2 2018 CAPITAL IMPROVEMENT PLAN 12

4.3 CAPITAL IMPROVEMENT PROJECTS (2023 UPDATE) 13

***5. IMPACT FEE CALCULATION*** 15

5.1 FINANCE COSTS DETERMINATION 15

5.2 EQUIVALENT SERVICE UNIT DETERMINATION 15

5.3 MAXIMUM IMPACT FEE CALCULATION 17

5.4 CONCLUSIONS AND RECOMMENDATIONS 18

## TABLES

TABLE 3.1 POPULATION DATA 7
TABLE 3.2 POPULATION PROJECTION 8
TABLE 3.3 PREVIOUS HOUSING STARTS 8
TABLE 3.4 EQUIVALENT SERVICE UNITS PER YEAR 9
TABLE 3.5 - PROJECTED DEVELOPMENT AND ESTIMATED WATER USE 10
TABLE 3.6 POPULATION PROJECTIONS SUMMARY 11
TABLE 4.1 ORIGINAL CAPITAL IMPROVEMENT PROJECTS (2018) 12
TABLE 4.2 CAPITAL IMPROVEMENT PROJECTS 14
TABLE 5.1 TOTAL INTEREST EXPENSE 15
TABLE 5.2 WATER METER EQUIVALENCY FACTORS 16
TABLE 5.3 EQUIVALENT METER FACTORS 16
TABLE 5.5 RECOMMENDED FEE AMOUNTS 18

## EXHIBITS

**EXHIBIT A** SERVICE AREA MAP
**EXHIBIT B** LAND USE MAP
**EXHIBIT C** DEVELOPMENT MAP
**EXHIBIT D** WATER CAPITAL IMPROVEMENT PROJECTS
**EXHIBIT E** WASTEWATER CAPITAL IMPROVEMENT PROJECTS

## APPENDICES

**APPENDIX A** WATER CAPITAL IMPROVEMENT PROJECTS COST ESTIMATES
**APPENDIX B** WASTEWATER CAPITAL IMPROVEMENT PROJECTS COST ESTIMATES

# 1. INTRODUCTION

## 1.1 HISTORY

The City of La Marque first adopted Impact Fees and the supporting Land Use Assumptions (LUA) and Capital Improvements Plan (CIP) in 2018. Since the initial adoption, Impact Fees have not been amended to reflect the City's progress on its CIP, appropriateness of initial LUA, and the Impact Fee collections and implementation. The initial study was completed by ARKK Engineers, LLC in 2018. This report forms the basis of the first scheduled update which is planned for 2023, since the initial 2018 report.

## 1.2 STATE LAW PERTAINING TO IMPACT FEES

Chapter 395 of the Texas Local Government Code prescribes the required process for cities to follow for adoption, amendment, and update of Impact Fees charged. The City of La Marque charges Impact Fees for each new connection to the City's water distribution and/or wastewater collection system.

Updates are required to be performed on a five-year cycle. The update process requires engaging a Registered Professional Engineering firm to prepare the aforementioned documents and calculations. The results are then to be presented to an Advisory Committee appointed by the City Council to review and recommend adoption of land use assumptions, population projections, proposed CIP projects, and the amount of the Impact Fees to be considered and adopted by the City.

The advisory Committee is required to comprise of five or more members, of which 40 percent (40%) or more are representatives of the real estate, development, or building industries, who are not employees or officials of the City. Further, the City's Planning and Zoning Commission may act as the advisory committee if the commission includes at least one representative of the real estate, development, or building industry.

According to the City of La Marque Ordinance Section 42-14, the Planning and Zoning Commission shall act as the advisory committee. The City's Planning and Zoning Commission currently has 5 members, of which one is a member from the real estate industry, as required by the legislation, to fulfill this requirement.

For purpose of this update, it is recommended that the City adopt a **10-year** planning period from 2023-2033 and consider factors affecting growth rates, intensity of development, known major development projects, and projections by local and state agencies to guide the land use assumptions and resulting CIP. This update study includes a review of the growth trend during the previous planning period, projects implemented from the CIP; water and wastewater projects and their actual cost.

# 2. SERVICE AREA

The original LUA adopted in 2018 utilized the area within the City of La Marque's City Limit. Since 2018 there has not been any new annexations. Therefore, the Service Area, as seen on **EXHIBIT A,** remains unchanged.

In the future, as areas are considered for annexation, the Service Area Map should be updated to reflect the annexed areas. Areas outside the City Limits in which the City is considering executing a development agreement for water and/or wastewater service, should also be incorporated into the service area.

# 3. LAND USE ASSUMPTIONS AND POPULATION PROJECTIONS

## 3.1 LAND USE ASSUMPTIONS

The purpose of the LUA is to provide the basis for provision and requirement for projects to support new development in the Service Area and to project the number of equivalent service units (ESU) to fairly allocate the resulting costs through the assessment of Impact Fees. For the purposes of this report, the terms equivalent meter and equivalent service unit will be used interchangeably.

The following factors were considered in the initially adopted Land Use Assumptions and have been reviewed as part of this update process:

a. The character, type, density and quantity of existing development
b. Proposed land use (See **EXHIBIT B**)
c. The Water System Modeling and Planning Study (2016 ARKK Engineers)
d. Availability of land for future development
e. Current growth trends in the City
f. Location and configuration of vacant land
g. Known or anticipated development projects
h. Physical holding capacity of the City
i. Known or anticipated development projects

This update also takes into consideration actual growth rates for the previous period.

## 3.2 PREVIOUS PERIOD DEVELOPMENTS

In 2018 there were many new developments in the planning phase. Several projects were completed, and some had initial phases which were in progress. The following is a list of the major projects which began and were in the planning stages.

a. Trails at Woodhaven
    i. Section 1
    ii. Section 2
    iii. TWL Senior Living

iv. Commercial Reserve
v. Cottage Reserve

b. Ambrose
   i. Section 1
   ii. Section 2
   iii. Section 3

c. Sunset Grove
   i. Section 1
   ii. Section 2
   iii. Section 3
   iv. Section 4

d. Delany Cove
e. CRV/Motco
f. JMK5 Arena

These developments as well as anticipated development areas are shown in **EXHIBIT C.**

## 3.3 BASE DATA

The data developed for the original LUA was based on aerial mapping and HGAC planning resources. Updated data obtained from the US Census Bureau, is shown in the following table:

**TABLE 3.1 POPULATION DATA**

| Year | Household Population | Increase |
|---|---|---|
| 2017 | 16,739 | |
| 2018 | 16,805 | 0.4% |
| 2019 | 17,319 | 3.1% |
| 2020 | 18,455 | 6.6% |
| 2021 | 18,821 | 2.0% |
| 2022 | 19,147 | 1.7% |
| | **AVERAGE** | 2.7% |

## 3.4 POPULATION PROJECTION

Since the original LUA were adopted, the 2020 census was completed and reflected that the City of La Marque had a population of 18,455. The figures obtained from the national census show a growth record of 2.7% for the period 2018-2022. (**TABLE 3.1**)

The following table shows population projections for the 10-year planning period for this study. Number of connections for years 2020 and 2021 was determined by obtaining actual meter counts by size from the City, and then converting these to ESU's as defined in Section 5.2.

**TABLE 3.2 POPULATION PROJECTION**

| YEAR | ESTIMATED POPULATION | ESTIMATED ANNUAL NUMBER OF CONNECTIONS ADDED* | APPROXIMATE CONNECTIONS |
|---|---|---|---|
| 2020 | 18,455 | | 6,603** |
| 2021 | 18,821 | | 7,512** |
| 2022 | 19,147 | | 8,956** |
| 2023 | 19,664 | 250 | 9,206 |
| 2024 | 20,195 | 250 | 9,456 |
| 2025 | 20,740 | 250 | 9,706 |
| 2026 | 21,300 | 250 | 9,956 |
| 2027 | 21,875 | 250 | 10,206 |
| 2028 | 22,466 | 250 | 10,456 |
| 2029 | 23,072 | 250 | 10,706 |
| 2030 | 23,695 | 250 | 10,956 |
| 2031 | 24,335 | 250 | 11,206 |
| 2032 | 24,992 | 250 | 11,456 |
| 2033 | 25,667 | 250 | 11,706 |

* 5-YR-AVERAGE (TABLE 3.4)
**PROVIDED BY CITY OF LA MARQUE

## 3.5 HOUSING STARTS

According to the City's Building Permit Records, the following table provides housing starts and resulting estimated population increases for the past 5 years.

**TABLE 3.3 PREVIOUS HOUSING STARTS**

| YEAR | HOUSING STARTS | ESTIMATED POPULATION (PROJECTED FROM 2018) | PERCENT INCREASE IN HOUSING STARTS |
|---|---|---|---|
| 2018 | **300** | 16,805 | 4.5%*** |
| 2019 | **194** | 17,271 | 2.8% |
| 2020 | **241** | 17,849 | 3.3% |
| 2021 | **223** | 18,384 | 3.0% |
| 2022 | **217** | 18,905 | 2.8% |
| 2023 | **135** | 19,229 | 1.7% |
| | | **5-YEAR AVERAGE** | 3.0% |

***INCREASE FROM 2017 ESTIMATE

## 3.6 TEN YEAR GROWTH ASSUMPTIONS

The original LUA projected a growth rate going forward for the 10-year planning period (2018-2027) of 102 ESU per year.

The current rate of growth in terms of ESU for the City currently averages around 250 new ESU's per calendar year from 2019-2023 as evidenced by the impact fees collected since 2019. The number of ESU's for 2019 is not included in the calculation for the 5-year average as development severely decreased over the period 2019-2020. The following table shows the impact fees collected and the equivalent ESU per year. This is based on reports obtained from the City for the period 2019 to 2023.

**TABLE 3.4 EQUIVALENT SERVICE UNITS PER YEAR**

| CALENDAR YEAR | IMPACT FEE | TOTAL IMPACT FEES COLLECTED | EQUIVALENT SERVICE UNIT |
|---|---|---|---|
| 2019 | $3,770.00 | $1,848,335.45 | 490 |
| 2020 | $3,770.00 | $506,976.52 | 134 |
| 2021 | $3,770.00 | $939,225.35 | 249 |
| 2022 | $3,770.00 | $820,616.00 | 218 |
| 2023 (6/12/2023) | $3,770.00 | $754,471.10 | 400* |
| | | **5-YEAR AVERAGE (ESU)** | **250** |
| | | **5-YEAR AVERAGE (%)** | **2.69%** |

*Estimated total connections for 2023 based on existing impact fees collected for 6 out of 12 months.

With the current total connections in the system expressed in ESU's of approximately 8,956, the annual growth rates in terms of ESU was 2.8%. It is recommended that for the 2023 update of the LUA's the City adopt a growth rate of 2.69% in ESU to the water and wastewater system. This is a more realistic statistic because it is based on actual impact fees collected.

## 3.7 ULTIMATE POPULATION PROJECTIONS

The original LUA adopted in 2018 provided a build-out connection capacity of the city. The following primary factors were considered:

a. Existing development
b. Proposed land use
c. Available land

The ultimate projected connections was estimated at 8,711. Since the 2018 update, the City has experienced development in multiple projected areas, resulting in an increase of the ultimate projected connections and ultimate population.

**TABLE 3.5** shows the City's projected development and estimated water use. The City could reasonably be expected to have **13,782** water service connections (ESU's) in the future. The areas of anticipated future development are shown in **EXHIBIT C.**

**TABLE 3.5 - PROJECTED DEVELOPMENT AND ESTIMATED WATER USE**

| DEVELOPMENT AREA NO. | PROJECT DEVELOPMENT TYPE | GROSS ACREAGE | ESTIMATED ACREAGE DEVELOPED WITH WATER SERVICE | ESTIMATED EQUIVALENT CONNECTIONS PER ACRE | ESTIMATED NUMBER OF NEW CONNECTIONS | ESTIMATED DAILY WATER USAGE (GPD) |
|---|---|---|---|---|---|---|
| 1 | Commercial | 241.8 | 181.3 | 2 | 363 | 127,050 |
| 2 | Commercial | 81.3 | 61.0 | 2 | 123 | 43,050 |
| 3 | Commercial | 10.4 | 7.8 | 2 | 16 | 5,600 |
| 4 | Commercial | 7.0 | 5.2 | 2 | 11 | 3,850 |
| 5 | Commercial | 26.1 | 19.6 | 2 | 40 | 14,000 |
| 6 | Commercial | 19.3 | 14.5 | 2 | 29 | 10,150 |
| 7 | Commercial | 11.4 | 8.6 | 2 | 18 | 6,300 |
| 8 | Commercial | 3.5 | 2.6 | 2 | 6 | 2,100 |
| 9 | Commercial | 10.8 | 8.1 | 2 | 17 | 5,950 |
| 10 | Commercial | 18.1 | 13.6 | 2 | 28 | 9,800 |
| 11 | Commercial | 16.3 | 12.2 | 2 | 25 | 8,750 |
| 12 | Commercial | 3.5 | 2.6 | 2 | 6 | 2,100 |
| 13 | Mixed | 463.3 | 347.5 | 2 | 695 | 243,250 |
| 14 | Commercial | 54.1 | 40.5 | 2 | 82 | 28,700 |
| 15 | Commercial | 88.1 | 66.1 | 2 | 133 | 46,550 |
| 16* | Residential | 76.9 | 57.7 | 4.7 | 267 | 93,450 |
| 17* | Residential | 48.9 | 36.6 | 4.1 | 150 | 52,500 |
| 18* | Residential | 57.9 | 43.5 | 3.9 | 168 | 58,800 |
| 19* | Residential | 105.8 | 79.3 | 3.7 | 290 | 101,500 |
| 20 | Residential | 16.4 | 12.3 | 4 | 50 | 17,500 |
| 21* | Residential | 136.1 | 102.1 | 1.9 | 185 | 64,750 |
| 22 | Residential | 47.9 | 35.9 | 4 | 144 | 50,400 |
| 23 | Residential | 57.9 | 43.4 | 4 | 174 | 60,900 |
| 24* | Residential (Multi) | 25.28 | 19.0 | 24 | 456 | 159,600 |
| | Commercial | 7 | 5.3 | 2 | 11 | 3,850 |
| | Arena | | | | | |
| 25 | University of Houston | 450.0 | 337.5 | 1.5 | 507 | 177,450 |
| 26* | CRV/Motco Tract | | | | 384 | 134,400 |
| | | | | **TOTAL** | 4378 | 1,532,300 |

| | |
|---|---|
| Number of Existing Equivalent Connections: | 8,956 |
| Number of Projected New Connections from Development Tracts: | 4,378 |
| Projected Infill Developments (5%): | 448 |
| Projected Ultimate Total Connections: | 13,782 |

* Known Lots/Requested Connections

ADICO CONSULTING ENGINEERS

## 3.8 LAND USE ASSUMPTIONS SUMMARY

The updated LUA are summarized as follows:

a. Based on a 2.7% population growth rate, projected population for 2023 is 19,664 and projected 2033 population is 25,667.
b. The projected ESU growth rate for the 10-year planning period (2023-2033) for purposes of this update report is 2.69%, or 250 ESU's per year. This results in a total new ESU's for the 10-year planning period of 2500 connections.
c. Based on population projections and projected connections for the period 2023-2033, a "population per equivalent meter" of 2.4 persons per connection was determined.
d. Ultimate connections are projected to be 13,782 based on available developable areas.
e. Ultimate population is projected to be 33,077 based on 2.4 persons per connection and 13,782 ultimate connections.
f. The following table summarizes projected population and connection growth for 2023, 2033 and ultimate development.

**TABLE 3.6 POPULATION PROJECTIONS SUMMARY**

| YEAR | CONNECTIONS 2.69% GROWTH | POPULATION |
|---|---|---|
| 2023 | 9,206 | 19,664 |
| 2033 | 11,706 | 25,667 |
| Ultimate | 13,782 | 33,077 |

# 4. CAPITAL IMPROVEMENT PLAN

The Impact Fee Capital Improvement Plan (CIP) includes projects anticipated to serve growth within the City during the 10-year planning period, 2023-2033.

## 4.1 ELIGIBLE FACILITIES

The impact fee legislation allows those projects necessitated by growth during the planning period to be included in the impact fee calculation. Projects included in the CIP include wastewater treatment facility expansions, sanitary sewer lift stations and existing lift station improvements, sanitary sewer collection systems and existing sanity sewer collection system expansion, water distribution systems and existing water distribution systems improvements, water production, water storage, and water treatment facilities and existing water storage and treatment facility expansion, including but not limited to water wells, water storage tanks, and booster pump systems.

## 4.2 2018 CAPITAL IMPROVEMENT PLAN

The original planned projects; including estimated costs; from the 2018 Impact Fee Study prepared by ARKK Engineers, LLC. are shown in **TABLE 4.1**.

**TABLE 4.1 ORIGINAL CAPITAL IMPROVEMENT PROJECTS (2018)**

| CIP PROJECT | YEAR | COST | GROWTH ALLOCATION, % | COST RELATED TO GROWTH |
|---|---|---|---|---|
| **WASTEWATER PROJECTS** | | | | |
| Wastewater Treatment Capacity to Serve 10 Year Projected Growth (Basis - 315 gallons per day per new connection at estimated $6.00 per gallon treatment cost) | 2019 | $1,924,020 | 100% | $1,924,020 |
| Influent Lift Station | 2019 | $3,450,000 | 15% | $506,000 |
| **WASTEWATER TOTAL** | | **$5,374,020** | | **$2,430,020** |
| **WATER PROJECTS** | | | | |
| 12" Water Distribution Line, Cedar to Magnolia (Phase 1) | 2019 | $397,520 | 50% | $198,760 |
| 12" Water Distribution Line, Stonewall to IH 45 (Phase 2) | 2022 | $1,393,350 | 75% | $1,045,013 |
| 12" Water Distribution Line, Westward to Newman (Phase 3) | 2024 | $1,098,920 | 75% | $824,190 |
| 12" Water Distribution Line, 12th to Stubbs (Phase 4) | 2026 | $1,370,490 | 5% | $68,525 |
| Water Supply Capacity Purchase from GCWA to Service 10 Year Growth (Basis - 2015 Purchase of GCWA Mackey Plant surface water capacity, Texas City/ League City from NRG) | 2019 | $1,223,377 | 100% | $1,223,377 |
| **WATER TOTAL** | | **$5,483,657** | | **$3,359,865** |
| **TOTALS** | | **$10,857,677** | | **$5,789,885** |

As of 2023, no projects have been completed. However, several projects are currently in the design phase and partially under construction.

## 4.3 CAPITAL IMPROVEMENT PROJECTS (2023 UPDATE)

The eligible water and wastewater projects for Impact Fee consideration are shown in **TABLE 4.2.** This includes proposed CIP projects, and proposed improvements to existing facilities that have excess capacity which can serve some or all of the projected growth during the study period.

For the existing facilities, their design capacity was evaluated against existing demands and projected growth, to determine the prorated value for growth during the study period. **EXHIBIT D (Water)** and **EXHIBIT E (Wastewater)** show the Capital Improvement Plan Project Maps**.**

## TABLE 4.2 CAPITAL IMPROVEMENT PROJECTS

| WASTEWATER PROJECTS | | | | |
|---|---|---|---|---|
| **CAPITAL IMPROVEMENT PROJECT NO.** | **PROJECT NAME** | **PROJECT COST** | **PERCENT RELATED TO GROWTH** | **PROJECT COST APPLICABLE TO IMPACT FEES** |
| 1 | University of Houston Tract Development | $2,033,100 | 100% | $2,033,100 |
| 2 | Lift Station #16 Upgrade | $506,250 | 100% | $506,250 |
| 3 | Influent Lift Station Modification | $1,687,500 | 15% | $253,125 |
| 4 | Wastewater Treatment Capacity to Serve 10 Year Projected Growth *(Basis – 315 gallons per day per new connection at estimated $16.00 per gallon treatment cost)* | $15,498,000 | 100% | $15,498,000 |
| 5 | Newman Road Sanitary Sewer Extension | $798,270 | 100% | $798,270 |
| **WASTEWATER TOTAL** | | **$20,523,120** | | **$19,088,745** |
| **WATER PROJECTS** | | | | |
| **CAPITAL IMPROVEMENT PROJECT NO.** | **PROJECT NAME** | **PROJECT COST** | **PERCENT RELATED TO GROWTH** | **PROJECT COST APPLICABLE TO IMPACT FEES** |
| 1 | University of Houston Tract Water Distribution System | $491,400 | 100% | $491,400 |
| 2 | Elevated Storage Tank at Takepoint #2 | $5,400,000 | 100% | $5,400,000 |
| 3 | 12" Water Distribution Line, Cedar to Magnolia (Phase 1) | $912,308 | 50% | $456,154 |
| 4 | 12" Water Distribution Line, Stonewall to IH 45 (Phase 2) | $3,197,738 | 75% | $2,398,304 |
| 5 | 12" Water Distribution Line, Westward to Newman (Phase 3) | $3,404,728 | 75% | $2,553,546 |
| 6 | 12" Water Distribution Line, 12th to Stubbs (Phase 4) | $3,145,275 | 5% | $157,264 |
| 7 | 12" Water Distribution Line, 12th Street to Highway 146 | $653,144 | 100% | $653,144 |
| 8 | Water Supply Capacity Purchase from GCWA to Service 10 Year Growth *(Basis – 2015 Purchase of GCWA Mackey Plant surface water capacity)* | $2,017,811 | 100% | $2,017,811 |
| **WATER TOTAL** | | **$19,222,404** | | **$14,127,623** |
| **TOTALS** | | **$39,745,524** | | **$33,216,368** |

# 5. IMPACT FEE CALCULATION

This section includes the determination of interest costs for the CIP, service unit equivalency and projections, and the maximum impact fee amount.

The capital improvement costs included in the impact fee calculation will include the portion of the previously identified CIP projects that are directly related to new growth. Some of the projects will include expansion of existing facilities to provide new capacity for future growth. The previous table (**TABLE 4.2)** show the proposed CIP Costs Summary, reflecting costs prorated for new development to be used in the impact fee calculation.

## 5.1 FINANCE COSTS DETERMINATION

Costs incurred to support the debt service for the CIP projects listed in **TABLE 4.2** are eligible for reimbursement in accordance with the Impact Fee Legislation. This update reflects an estimated interest rate of 2.5% per annum on bonds such as TWDB State Revolving Fund loans. On that basis, the total interest expense for the Impact Fee is calculated in **TABLE 5.1** below:

**TABLE 5.1 TOTAL INTEREST EXPENSE**

| | WATER | WASTEWATER |
|---|---|---|
| **Project Cost (Rated for Inflation)** | $14,127,622.63 | $19,088,745.00 |
| **Interest Rate** | 2.50% | 2.50% |
| **Term (Years)** | 20 | 20 |
| **Total Interest** | $3,839,420.82 | $5,187,689.88 |
| **Total Eligible Cost w/ Interest** | $17,967,043.44 | $24,276,434.88 |

## 5.2 EQUIVALENT SERVICE UNIT DETERMINATION

The equivalent meter/ESU was selected in the 2018 report as the method of measurement for consumption by new growth for impact fee purposes. The water meter serves as the service unit for both water and wastewater impact fee calculations. The equivalent meter is defined as the unit equivalent to the hydraulic capacity of a ¾ inch (3/4”) meter.

The 5/8” and 3/4” meters were selected because it represents the water meter size for an average single family dwelling. Equivalency factors are provided for larger meter sizes as developed by the American Water Works Association, as seen in **TABLE 5.2**

**TABLE 5.2 WATER METER EQUIVALENCY FACTORS**

| METER SIZE (INCHES) | EQUIVALENCY FACTOR |
|---|---|
| 5/8 OR 3/4 | 1 |
| 1" | 1.67 |
| 1 1/2" | 3.33 |
| 2" | 5.33 |
| 3" Compound | 10 |
| 4" Compound | 16.67 |
| 6" Compound | 33.33 |
| 8" Compound | 53.33 |
| 10" Compound | 76.67 |

**TABLE 5.3** uses these equivalency factors and the total existing meter count provided by the City of La Marque Water Billing Department to determine the total equivalent meters in the system can be determined.

**TABLE 5.3 EQUIVALENT METER FACTORS**

| SIZE | NO. OF METERS | ESU/EQUIV. | ESU 2022 |
|---|---|---|---|
| 3/4" | 7459 | 1 | 7459 |
| 1" | 160 | 1.67 | 267 |
| 2" Meter | 146 | 5.33 | 778 |
| 2" | 6 | 5.33 | 32 |
| 4" | 5 | 16.67 | 83 |
| 6" | 3 | 33.33 | 100 |
| 8" | 3 | 53.33 | 160 |
| 10" | 1 | 76.67 | 77 |
| | | **TOTAL** | 8956 |

A “population per equivalent meter” to factor in residential and commercial meters was also calculated. The 2023 calculation is as follows:

***2023 Population per Equivalent meter***

$$\frac{25{,}667\ -19{,}664\ \ (Increase\ in\ Population, 2023-2033)}{2{,}500\ (Projected\ Increase\ in\ ESU)} = 2.4$$

## 5.3 MAXIMUM IMPACT FEE CALCULATION

The maximum assessable impact fee is determined by dividing the cost of the CIP projects plus interest by the projected increase in equivalent meters for the 10 year planning period. The fee for various meter sizes is then determined by applying the factors provided in **TABLE 5.2** for all meters larger than the standard ¾" residential meter. The maximum assessable impact fee for the City of La Marque for water and wastewater is calculated as follows:

**MAXIMUM WATER IMPACT FEE**

$$\frac{\$17{,}967{,}043.44\ (Cost\ of\ Water\ CIP\ Projects)}{2{,}500\ (Projected\ Increase\ in\ ESU)} = \$7{,}186.82$$

**MAXIMUM WASTEWATER IMPACT FEE**

$$\frac{\$24{,}276{,}434.88\ (Cost\ of\ Wastewater\ CIP\ Projects)}{2{,}500\ (Projected\ Increase\ in\ ESU)} = \$9{,}710.57$$

Chapter 395 of the Local Government Code was amended in 2001 requiring the City to provide a credit for the following:

> *Section 395.014 Paragraph a (7):*
>
> *(A) a credit for the portion of ad valorem tax and utility service revenues generated by new service units during the program period that is used for the payment of improvements, including the payment of debt, that are included in the Capital Improvements Plan; or*
>
> *(B) In the alternative, a credit equal to 50 percent of the total projected cost of implementing the capital improvements plan.*

The Impact Fee legislation allows the City to charge an impact fee up to the amount shown as the calculated maximum.

In 2018, the maximum calculated fees were $2,196 for water and $1,588 for wastewater. This impact fee value has remained unchanged.

For this update (2023), the maximum allowable impact fee proposed is calculated as follows:

50% of Water CIP Costs per Equivalent Meter = $7,186.82 x 50% = **$3,593.41**

50% of Wastewater CIP Costs per Equivalent Meter = $9,710.57 x 50% = **$4,855.29**

## 5.4 CONCLUSIONS AND RECOMMENDATIONS

After discussion and deliberation of the Impact Fee Advisory Committee, the 2023 fee amounts to be recommended to City Council are as shown in **TABLE 5.4** below:

**TABLE 5.4 RECOMMENDED FEE AMOUNTS**

| TYPE | CURRENT FEE | 2023 UPDATE MAX FEE W/ 50% CREDIT | RECOMMENDED FEE |
|---|---|---|---|
| Water | $2,190 | $3,593.41 | |
| Wastewater | $1,580 | $4,855.29 | |
| Total (Water & Wastewater) | $3,770 | $8,448.70 | |
| **MULTIPLYING FACTORS** | | | |
| Single Family Dwelling | = 1.0 ESFC (Single Family Equivalent Unit) | | |
| Apartment Complex | = 1.0 ESFC per living unit | | |
| Hotel, Motel, Resort | = 0.8 ESFC per unit or room | | |
| Mobile Home | = 1.0 ESFC per unit or room | | |
| Commercial, Retail, Institutional, Light Industrial, and all other non-residential development: | | | |
| **METER SIZE** | **FACTOR** | **UNIT** | **TOTAL IMPACT FEE** |
| 5/8" - 3/4" | 1 | ESFC's | |
| 1" | 1.67 | ESFC's | |
| 1.5" | 3.33 | ESFC's | |
| 2", All Types | 5.33 | ESFC's | |
| 3" Compound | 10.67 | ESFC's | |
| 3" Turbine | 11.67 | ESFC's | |
| 4" Compound | 16.67 | ESFC's | |
| 4" Turbine | 21 | ESFC's | |
| 6" Compound | 33.33 | ESFC's | |
| 6" Turbine | 43.33 | ESFC's | |
| 8" Compound | 53.33 | ESFC's | |
| 8" Turbine | 93.33 | ESFC's | |
| 10" Compound | 76.67 | ESFC's | |
| 10" Turbine | 140 | ESFC's | |
| 12" All Types | 176.67 | ESFC's | |

**Note 1**: When separate dedicated fire system meters and systems are installed, the fire system meters are not charged a separate capital recovery fee.

**Note 2:** When building fire flow systems are combined with other building systems, the City Engineer shall determine the equivalency factor based on the meter size that would be required without the fire protection component of the flow.

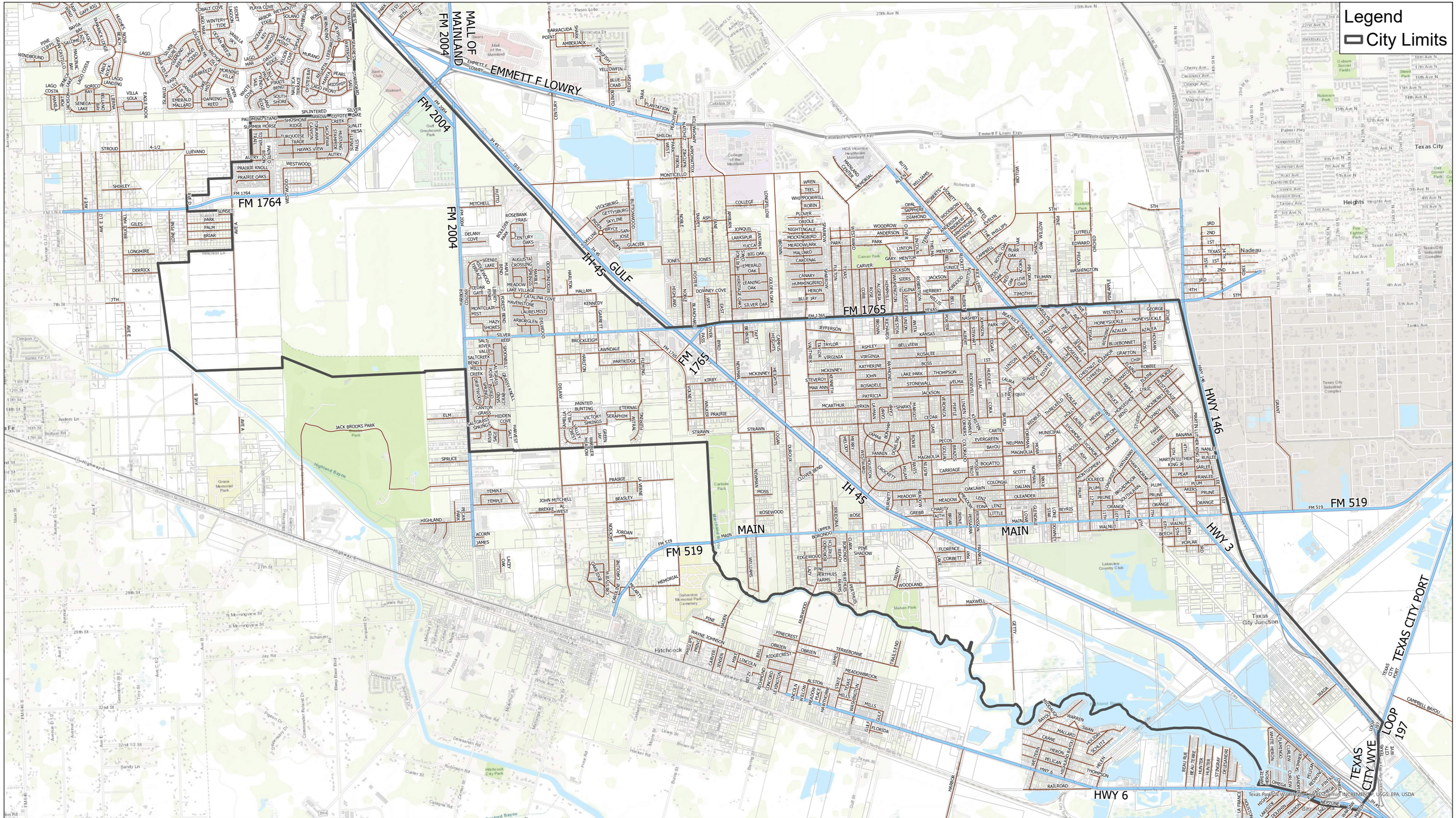
Legend
City Limits
FM 2004
MALL OF MAINLAND
EMMETT F LOWRY
FM 1764
IH 45
GULF
FM 1765
HWY 146
MAIN
FM 519
HWY 3
TEXAS CITY PORT LOOP 197
TEXAS CITY WYE
HWY 6
Texas City
Nadeau
Heights
Hitchcock
Texas City Junction
Lakeview Country Club
Galveston Memorial Park Cemetery
Gulf Greyhound Park
College of the Mainland
Mall of the Mainland
Carbide Park
Mahan Park
Carver Park
Kohfeldt Park
Robinson Park
Oak Grove Park
Osborn Soccer Fields
Sheed Park
Fire Fighters Park
Grace Memorial Park
Highland Bayou
Texas City Industrial Complex
JACK BROOKS PARK
Park
Hitchcock City Park
Walmart
Sam's Club
Kroger
HCA Houston Healthcare Mainland
Tanks Ave
Palmer Hwy
Kingston Dr
Somerset Ave
Robinson Dr
Tarpey Ave
Roberts St
Cherry Ave
Oleander Ave
Orange Ave
Palm Ave
Magnolia Ave
Paseo Lobo
Catalina St
Tradewinds Dr
Barracuda Point
Amberjack
Yellowfin
Blue Crab
Redfish
Plantation
Peachtree
Shiloh
Monticello
Mitchell
Hutto
Rosebank Trail
Delaney Cove
Century Oaks
Vicksburg
Gettysburg
Skyline
Bryce
San Jose
Glacier
Jones
College
Longfellow
Ash
Aubrey
Jonquil
Larkspur
Yucca
Big Oak
Emerald Oak
Leaning Oak
Golden Oak
Silver Oak
Heritage Oaks
Wren
Teel
Whippoorwill
Robin
Plover
Oriole
Nightingale
Mockingbird
Meadowlark
Mallard
Cardinal
Canary
Hummingbird
Heron
Blue Jay
Sparrow
Opal
Sapphire
Diamond
Woodrow
Anderson
Park
Carver
Gary
Mentor
Dickson
Siers
Eugene
Jackson
Herbert
Texas
Jefferson
Taylor
Virginia
Katherine
John
Rosadele
Patricia
Verkin
Lyman
Camp
Sparks
Margot
Cedar
Lake Park
Thompson
Stonewall
Velma
Jackson
Kansas
Bellview
Rosalee
Boss
Ashley
Virginia
Mckinney
Steveroy
Mar Ann
Mcarthur
Kirby
Walker
Prairie
Strawn
Dorbux
Newman
Heights
Moss
Rosewood
Clover Bend
Meadow
Oakdawn
Colonial
Dallian
Oleander
Carter
Evergreen
Neuman
Bayou
Magnolia
Bogatto
Scott
Myra
Montgomery
Dolorece
Plum
Prune
Orange
Walnut
Beech
Poplar
Pear
Akers
Frankee
Martin Luther King Jr
Carlee
Ruslee
Nanlee
Sarlee
Beyris
Florence
Corbett
Maxwell
Getty
Woodland
Trinity
Pine Shadow
Perthuis Farms
Fairbrook
Pinecrest
Obrien
Terreronnie
Ridgecrest
Meadowbrook
Alston
Estate
Texas
Washington
Mills
Gale
Florida
Harbor
Bell
Lincoln
Richmond
Concord
Lexington
Wilson
Meadow
Peck
Hawthorne
Wayne Johnson
Carrie
Jason
Mike
Britz
Pine
Haden
Fairlane
Trails End
Jefferson
Taft
Bernice
Gabriel Heights
Partridge
Lawndale
Brookleigh
Garrett
Kennedy
Hallam
Downey Cove
Jones
Longfellow
Aubrey
Ash
Jonquil
Larkspur
Yucca
Big Oak
Emerald Oak
Leaning Oak
Golden Oak
Silver Oak
Heritage Oaks
Sparrow
Heron
Canary
Hummingbird
Blue Jay
Cardinal
Mallard
Meadowlark
Mockingbird
Nightingale
Oriole
Plover
Robin
Whippoorwill
Teel
Wren

# Legend

## Land Use

- Cemeteries
- Colleges/Universities Public
- Commercial
- Emergency Services (Fire, Police)
- Farm/Ranch Land (in use)
- Farm/Ranch Land (not in use)
- Farm/Ranch Property (homestead & other)
- Farm/Ranch Property (homestead only)
- Industrial
- Landfill (Active/Inactive)
- Large Parks (>= 5 acres)
- Other Right of Way/Easement
- Primary Schools (K-8) Public
- Public Roads
- Residential Available Inventory
- Residential Available Inventory (vacant)
- Residential Mobile Home
- Residential Multi-Family
- Residential Other
- Residential Single-Family
- Schools (unknown type)
- Secondary Schools (HS) Public
- Small Open Spaces (Circles/Spaceways/Triangles)
- Small Parks (<5 acres)
- Sports Fields
- Undetermined Land Use
- Unusable land (land under water)
- Utility Right of Way
- Vacant
- Vacant Residential Lots/Tracts

ADICO CONSULTING ENGINEERS

# City of La Marque
# Land Use Map
# Exhibit B

N W E S

0 1,350 2,700
Feet

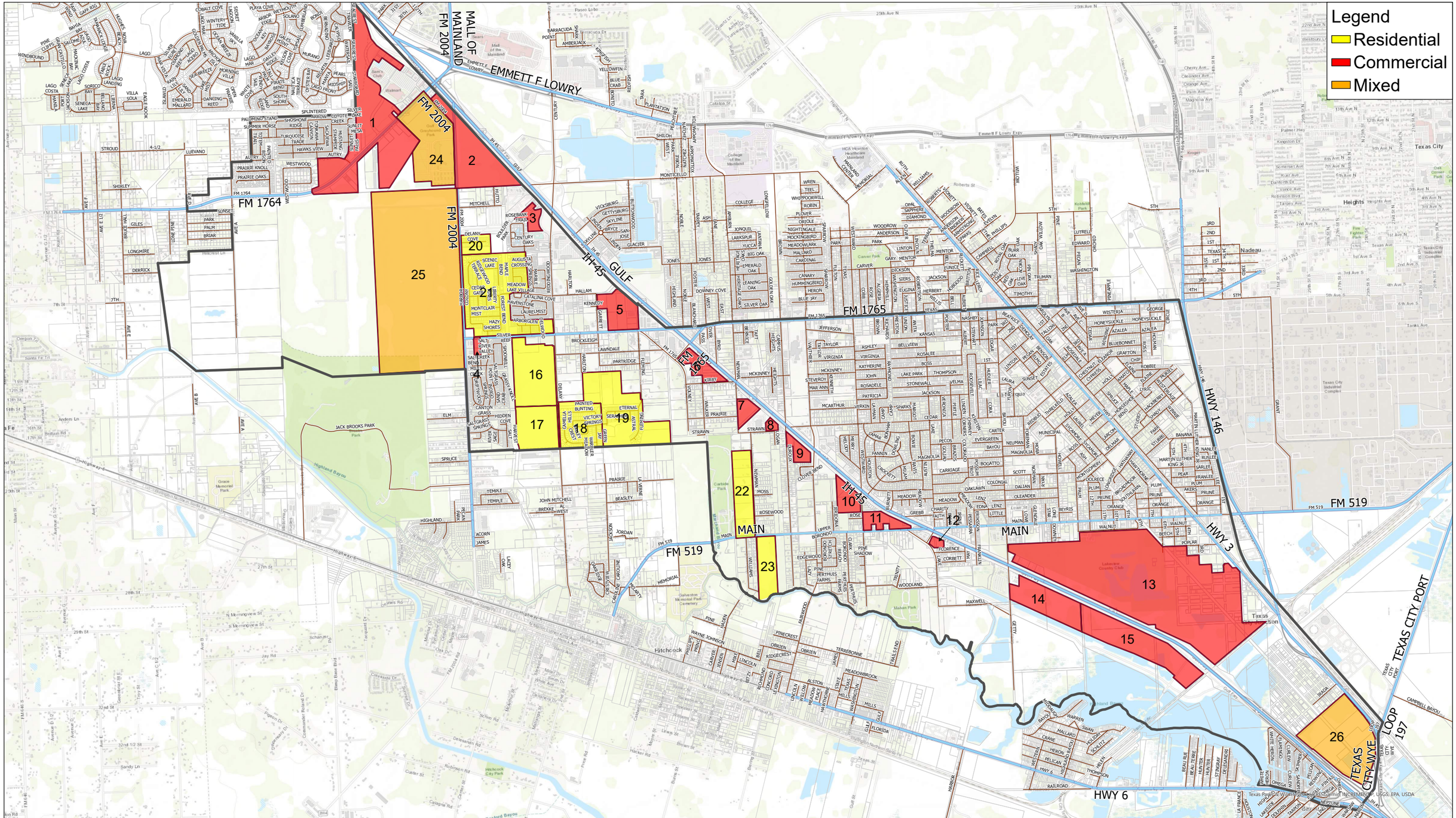


ADICO
CONSULTING ENGINEERS

# City of La Marque
# Development Map
# Exhibit C

N W E S

0 1,350 2,700
Feet

# Exhibit D
# Impact Fee Study
# Water Capital Improvement Plan Projects

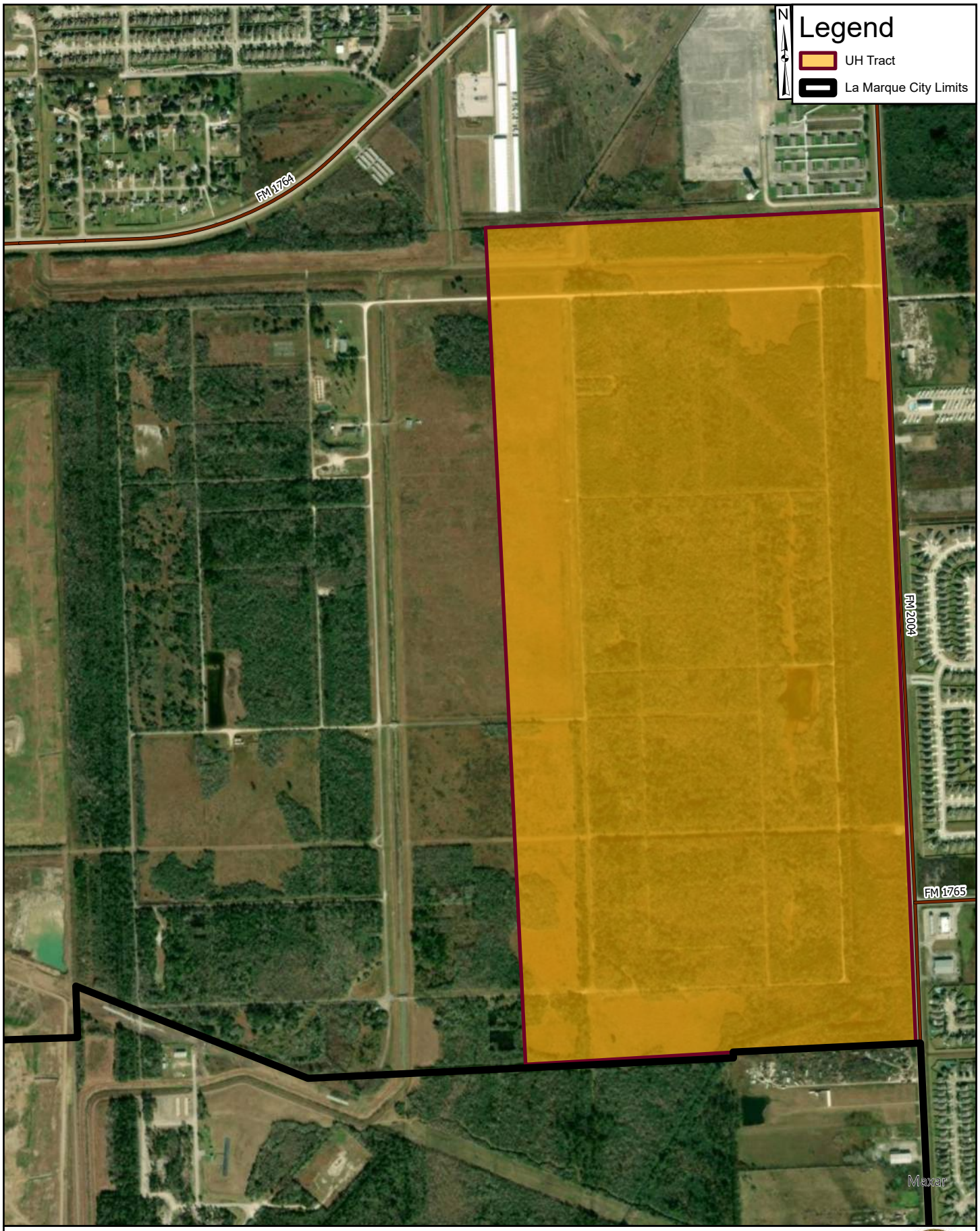


**City of La Marque**
Impact Fee Study 2023 Update
Water CIP Project No. 1




ADICO CONSULTING ENGINEERS

**City of La Marque**
Impact Fee Study 2023 Update
Water CIP Project No. 2

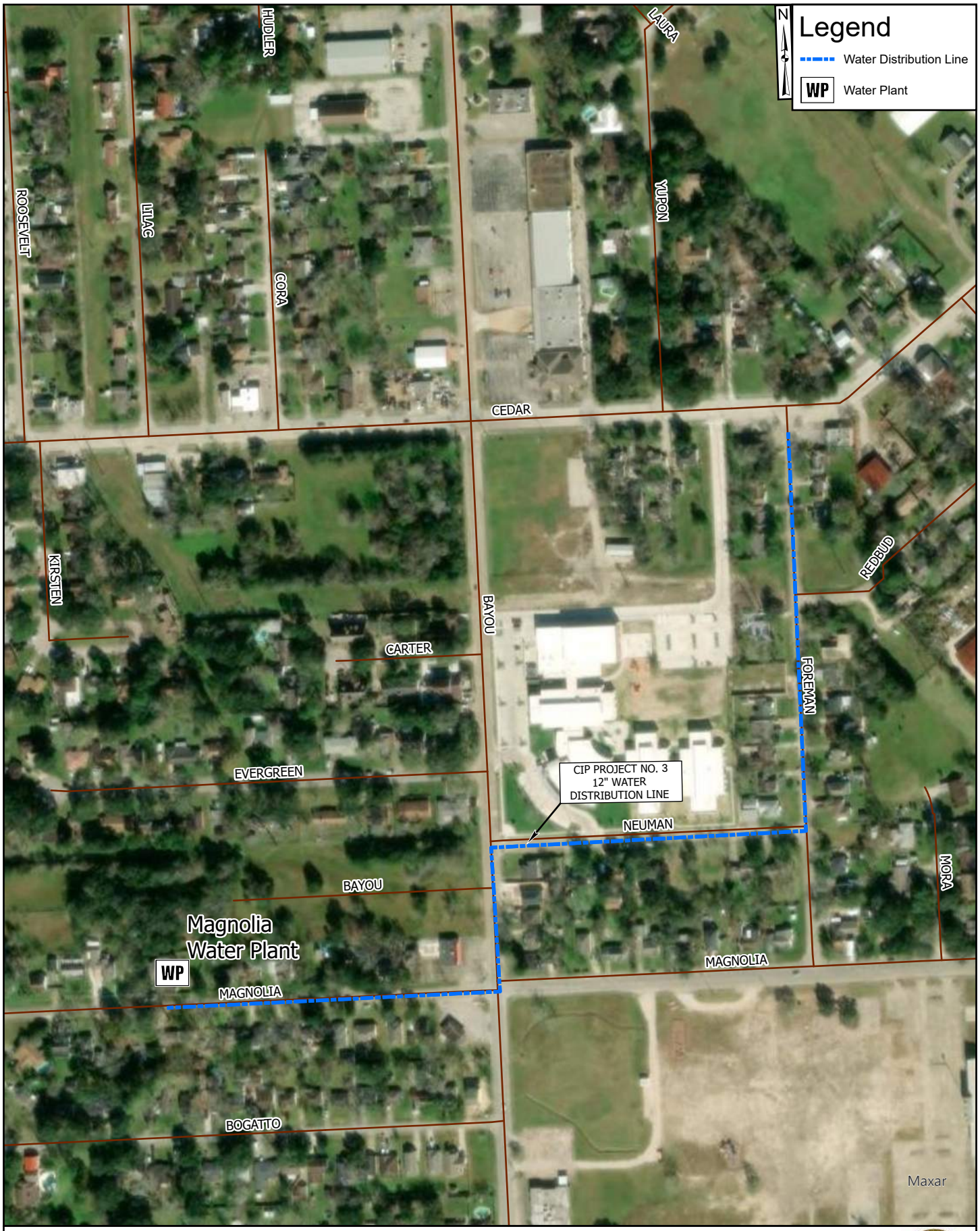


ADICO CONSULTING ENGINEERS

**City of La Marque**
Impact Fee Study 2023 Update
Water CIP Project No. 3

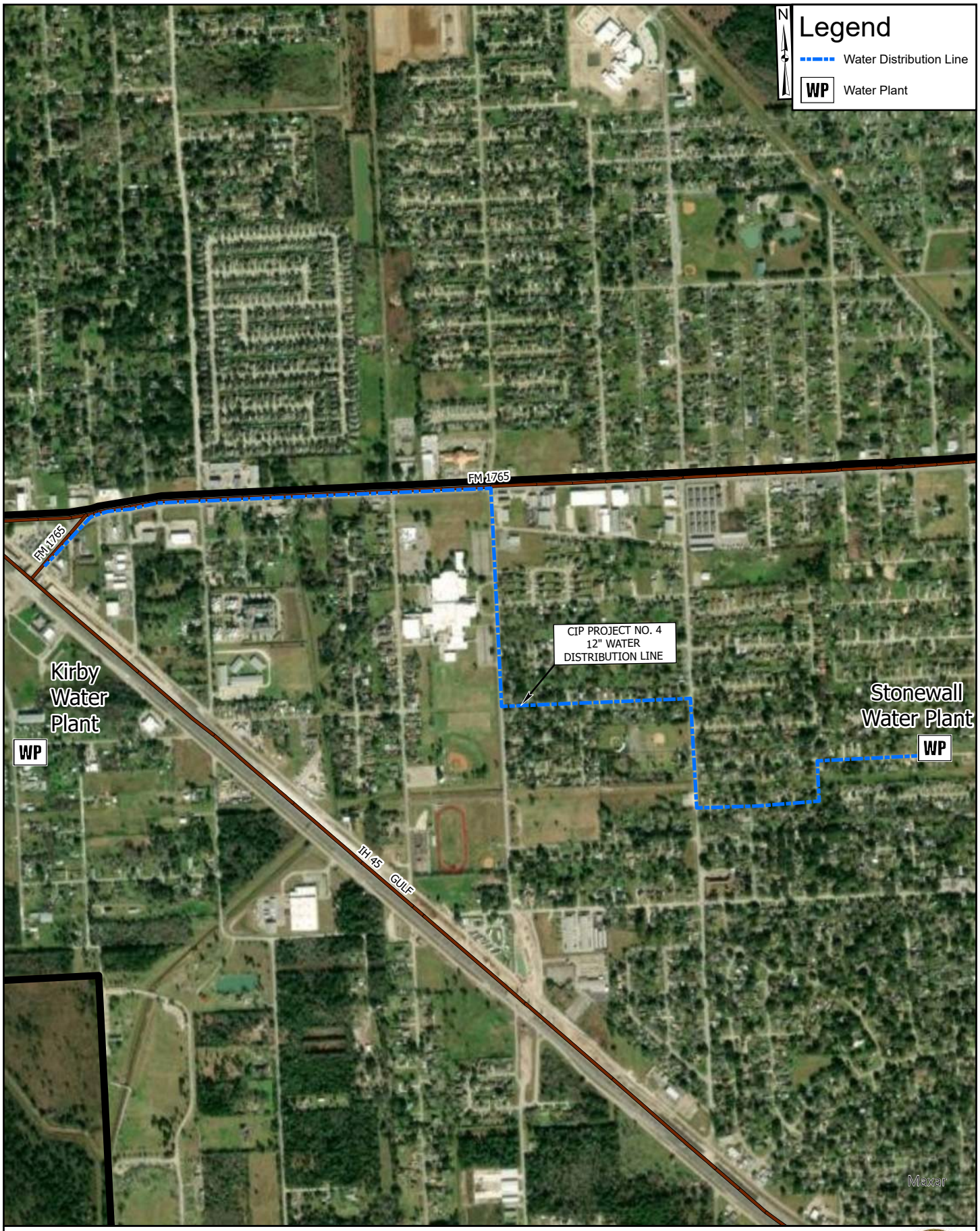


ADICO CONSULTING ENGINEERS

**City of La Marque**
Impact Fee Study 2023 Update
Water CIP Project No. 4

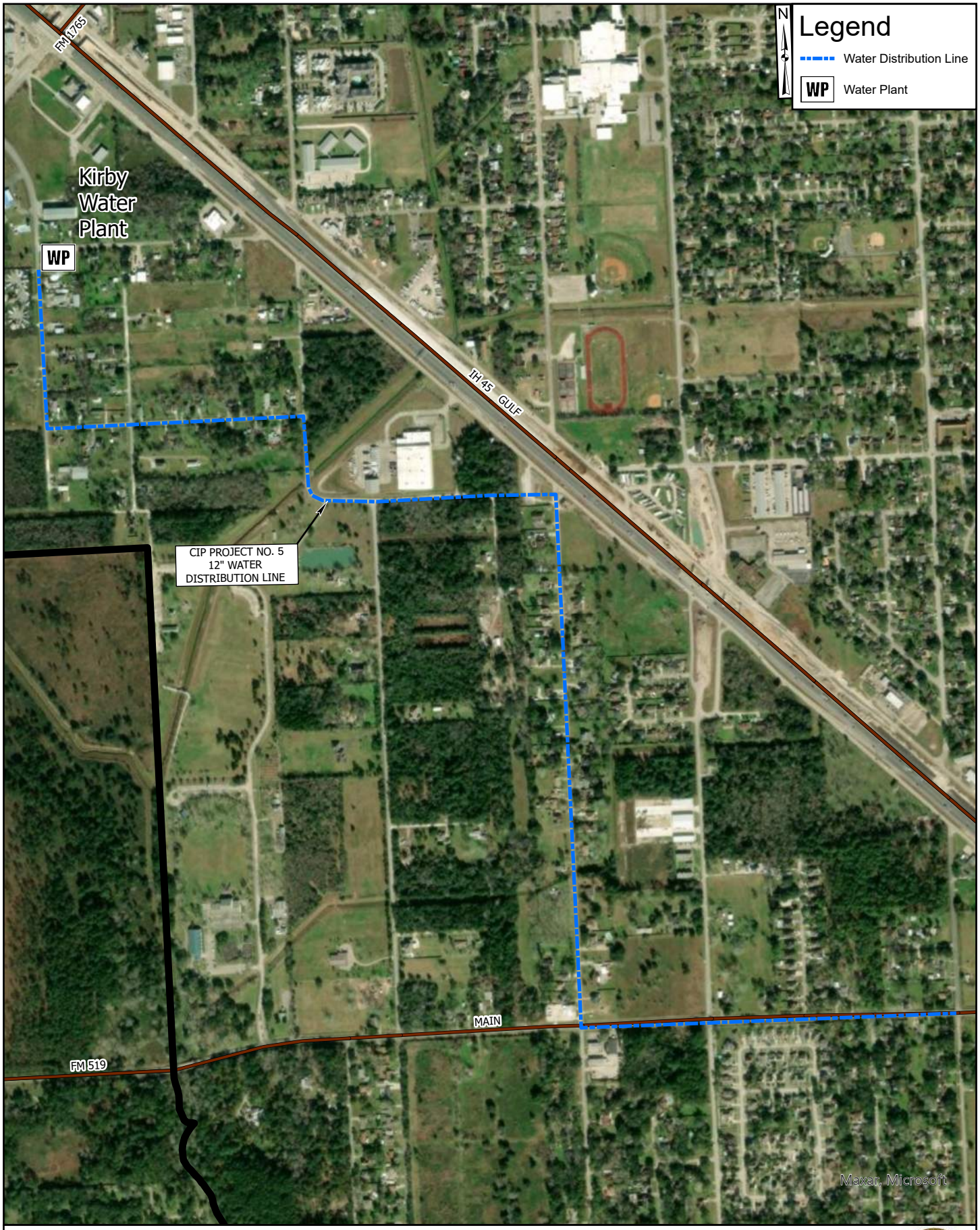


ADICO CONSULTING ENGINEERS

**City of La Marque**
Impact Fee Study 2023 Update
Water CIP Project No. 5

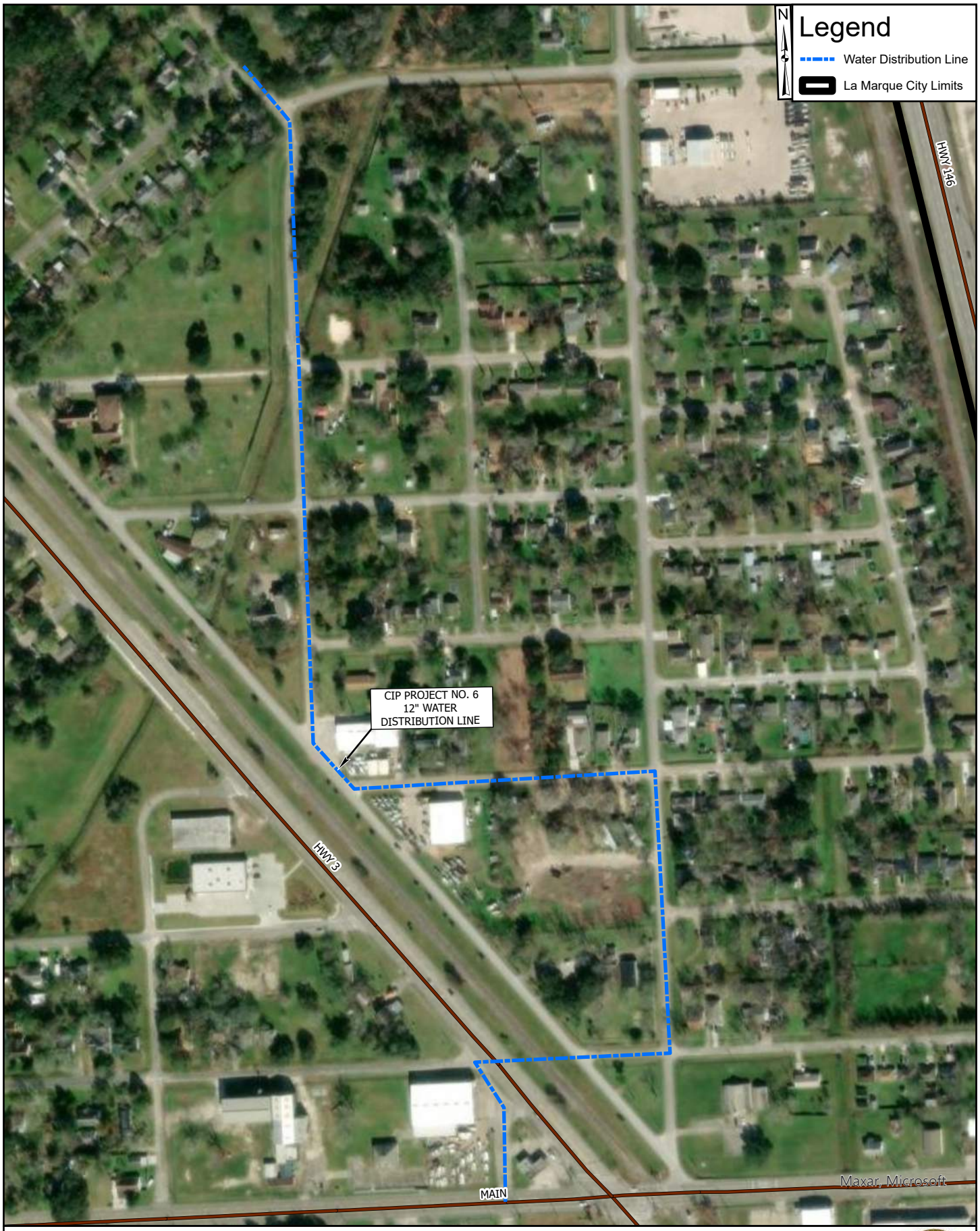


ADICO
CONSULTING ENGINEERS

**City of La Marque**
Impact Fee Study 2023 Update
Water CIP Project No. 6




ADICO
CONSULTING ENGINEERS

**City of La Marque**
Impact Fee Study 2023 Update
Water CIP Project No. 7

# Exhibit E
# Impact Fee Study
# Wastewater Capital Improvement Plan Projects

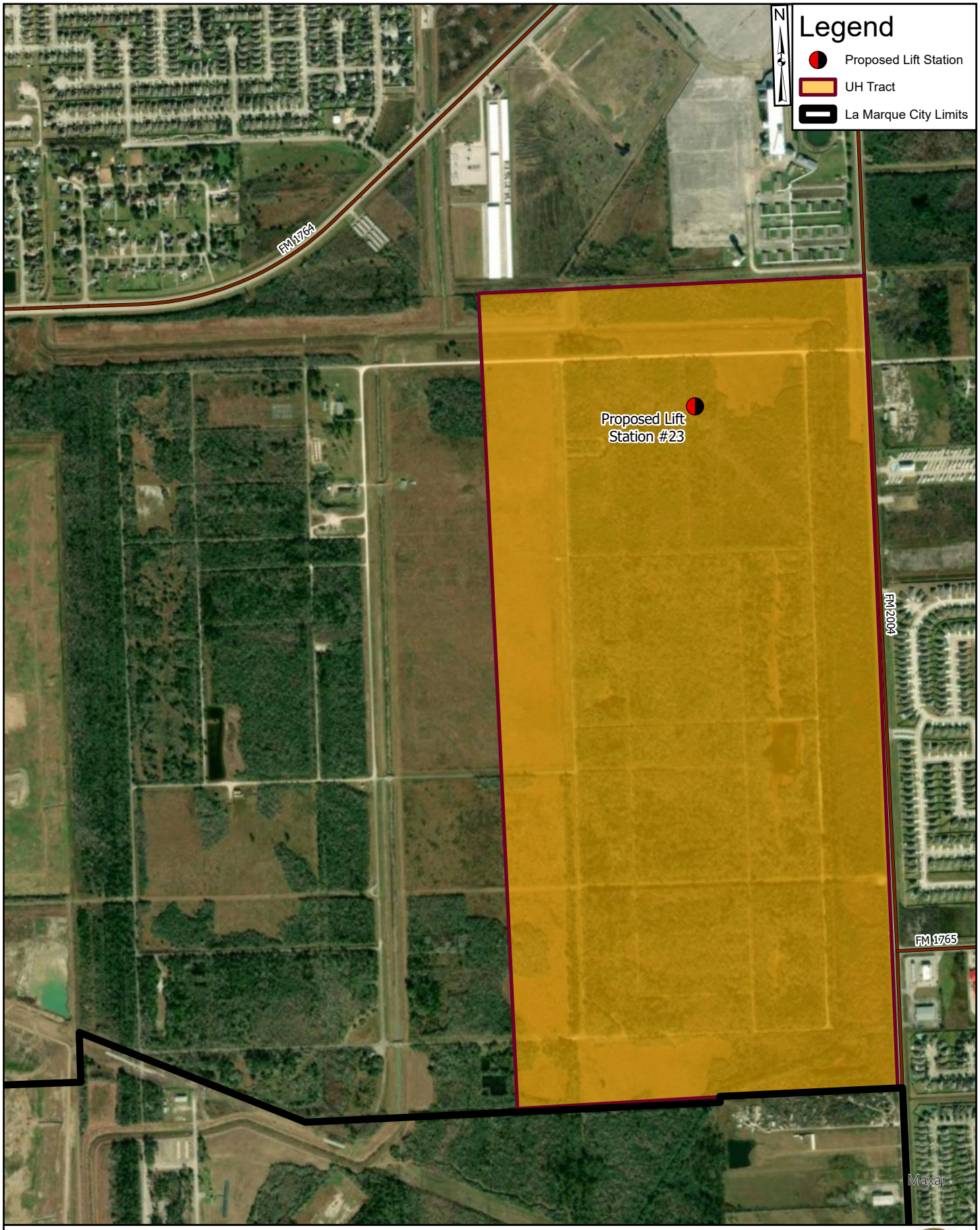


**City of La Marque**
Impact Fee Study 2023 Update
Waste Water CIP Project No. 1

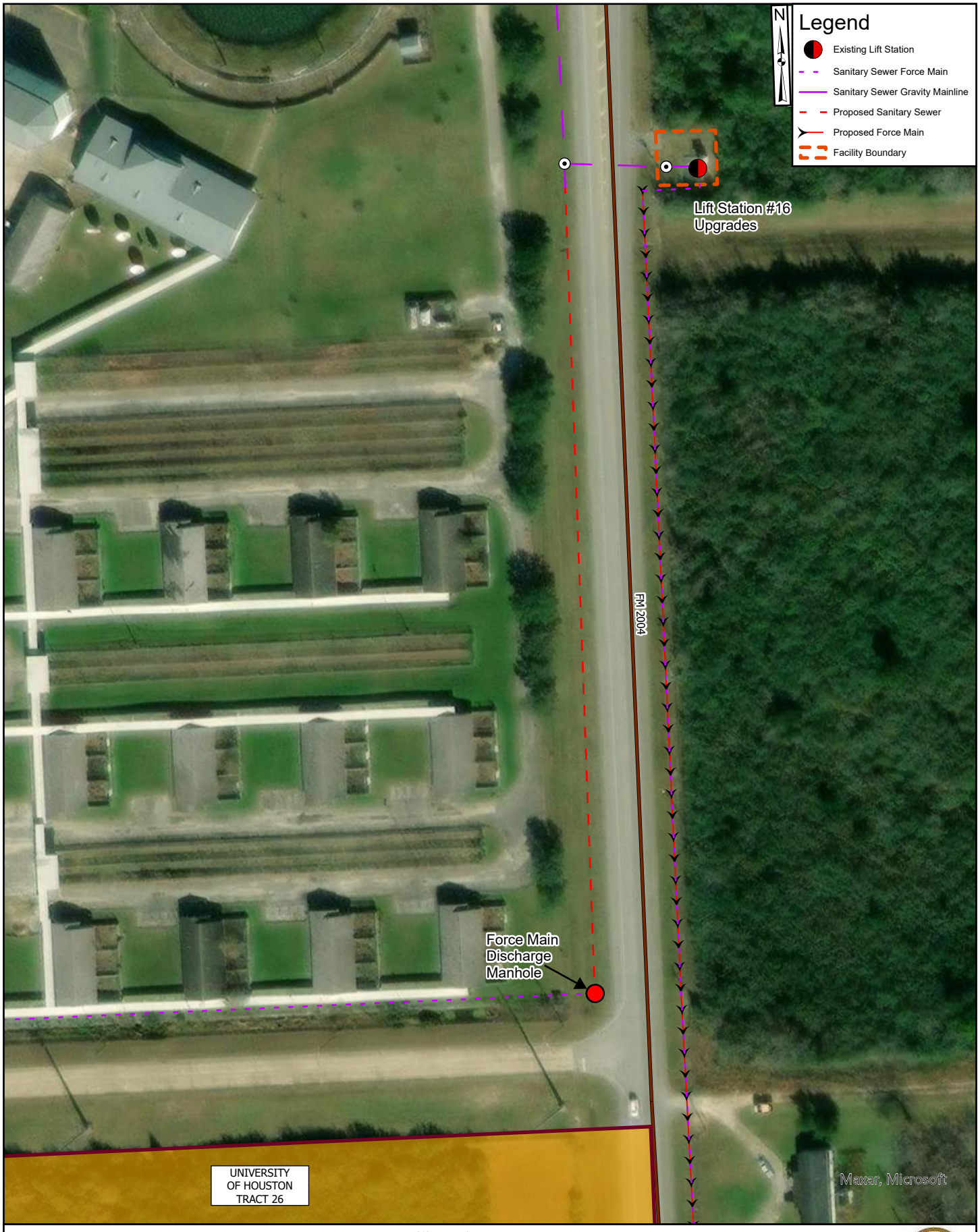


ADICO
CONSULTING ENGINEERS

**City of La Marque**
Impact Fee Study 2023 Update
Waste Water CIP Project No. 2




ADICO CONSULTING ENGINEERS

**City of La Marque**
Impact Fee Study 2023 Update
Waste Water CIP Project No. 3




ADICO CONSULTING ENGINEERS

**City of La Marque**
Impact Fee Study 2023 Update
Wastewater CIP Project No. 5

# APPENDIX A
# Impact Fee Study
# Water Capital Improvement Plan Projects Cost Estimates

**CITY OF LA MARQUE**
**Impact Fee Study - Water CIP Project No. 1**
**Cost Estimate**

Adico, LLC - Consulting Engineers

Project Name: University of Houston Tract Water Distribution System

| ITEM NO. | DESCRIPTION | QUANTITY | UNIT | UNIT PRICE | TOTAL ITEM COST |
|---|---|---|---|---|---|
| 1 | 6-Inch PVC, C-900 | 10,000 | LF | $25 | $250,000 |
| 2 | 6-Inch Gate Valve | 10 | EA | $1,400 | $14,000 |
| 3 | Fire Hydrant | 20 | EA | $5,000 | $100,000 |
| | | | Subtotal: | | $364,000 |
| | | | Contingency (20%): | | $72,800 |
| | | | Engineering (15%): | | $54,600 |
| | | | Total: | | $491,400 |

**CITY OF LA MARQUE**
**Impact Fee Study - Water CIP Project No. 2**
**Cost Estimate**

Adico, LLC - Consulting Engineers

Project Name: Elevated Storage Tank at Takepoint #2

| ITEM NO. | DESCRIPTION | QUANTITY | UNIT | UNIT PRICE | TOTAL ITEM COST |
|---|---|---|---|---|---|
| 1 | Elevated Storage Tank at Takepoint #2 | 1 | LS | $4,000,000 | $4,000,000 |
| | | | Subtotal: | | $4,000,000 |
| | | | Contingency (20%): | | $800,000 |
| | | | Engineering (15%): | | $600,000 |
| | | | Total: | | $5,400,000 |

**CITY OF LA MARQUE**
**Impact Fee Study - Water CIP Project No. 3**
**Cost Estimate**

Adico, LLC - Consulting Engineers

Project Name: 12" Water Distribution Line, Cedar to Magnolia (Phase 1)

| ITEM NO. | DESCRIPTION | QUANTITY | UNIT | UNIT PRICE | TOTAL ITEM COST |
|---|---|---|---|---|---|
| 1 | Water Distribution Line Upgrade | 1 | LS | $675,784 | $675,784 |
| | | | Subtotal: | | $675,784 |
| | | | Contingency (20%): | | $135,157 |
| | | | Engineering (15%): | | $101,368 |
| | | | Total: | | $912,308 |

**CITY OF LA MARQUE**
**Impact Fee Study - Water CIP Project No. 4**
**Cost Estimate**

Adico, LLC - Consulting Engineers

Project Name: 12" Water Distribution Line, Stonewall to IH 45 (Phase 2)

| ITEM NO. | DESCRIPTION | QUANTITY | UNIT | UNIT PRICE | TOTAL ITEM COST |
|---|---|---|---|---|---|
| 1 | Water Distribution Line Upgrade | 1 | LS | $2,368,695 | $2,368,695 |
| | | | Subtotal: | | $2,368,695 |
| | | | Contingency (20%): | | $473,739 |
| | | | Engineering (15%): | | $355,304 |
| | | | Total: | | $3,197,738 |

**CITY OF LA MARQUE**
**Impact Fee Study - Water CIP Project No. 5**
**Cost Estimate**

Adico, LLC - Consulting Engineers

Project Name: 12" Water Distribution Line, Westward to Newman (Phase 3)

| ITEM NO. | DESCRIPTION | QUANTITY | UNIT | UNIT PRICE | TOTAL ITEM COST |
|---|---|---|---|---|---|
| 1 | Water Distribution Line Upgrade | 1 | LS | $2,522,021 | $2,522,021 |
| | | | Subtotal: | | $2,522,021 |
| | | | Contingency (20%): | | $504,404 |
| | | | Engineering (15%): | | $378,303 |
| | | | Total: | | $3,404,728 |

**CITY OF LA MARQUE**
**Impact Fee Study - Water CIP Project No. 6**
**Cost Estimate**

Adico, LLC - Consulting Engineers

Project Name: 12" Water Distribution Line, 12th to Stubbs (Phase 4)

| ITEM NO. | DESCRIPTION | QUANTITY | UNIT | UNIT PRICE | TOTAL ITEM COST |
|---|---|---|---|---|---|
| 1 | Water Distribution Line Upgrade | 1 | LS | $2,329,833 | $2,329,833 |
| | | | Subtotal: | | $2,329,833 |
| | | | Contingency (20%): | | $465,967 |
| | | | Engineering (15%): | | $349,475 |
| | | | Total: | | $3,145,275 |

**CITY OF LA MARQUE**
**Impact Fee Study - Water CIP Project No. 7**
**Cost Estimate**

Adico, LLC - Consulting Engineers

Project Name: 12" Water Distribution Line, 12th Street to Highway 146

| ITEM NO. | DESCRIPTION | QUANTITY | UNIT | UNIT PRICE | TOTAL ITEM COST |
|---|---|---|---|---|---|
| 1 | 12-Inch PVC, C-900 | 5,763 | LF | $70 | $403,410 |
| 2 | 12-Inch Gate Valve | 6 | EA | $3,400 | $20,400 |
| 3 | Fire Hydrant | 12 | EA | $5,000 | $60,000 |
| | | | Subtotal: | | $483,810 |
| | | | Contingency (20%): | | $96,762 |
| | | | Engineering (15%): | | $72,572 |
| | | | Total: | | $653,144 |

**CITY OF LA MARQUE**
**Impact Fee Study - Water CIP Project No. 8**
**Cost Estimate**

Adico, LLC - Consulting Engineers

Project Name: Water Supply Capacity Purchase

| ITEM NO. | DESCRIPTION | QUANTITY | UNIT | UNIT PRICE | TOTAL ITEM COST |
|---|---|---|---|---|---|
| 1 | Capacity | 1 | LS | $1,494,675 | $1,494,675 |
| | | | Subtotal: | | $1,494,675 |
| | | | Contingency (20%): | | $298,935 |
| | | | Engineering (15%): | | $224,201 |
| | | | Total: | | $2,017,811 |

# APPENDIX B
# Impact Fee Study
# Wastewater Capital Improvement Plan Projects
# Cost Estimates

**CITY OF LA MARQUE**
**Impact Fee Study - Wastewater CIP Project No. 1**
**Cost Estimate**

Adico, LLC - Consulting Engineers

Project Name: University of Houston Tract Development

| ITEM NO. | DESCRIPTION | QUANTITY | UNIT | UNIT PRICE | TOTAL ITEM COST |
|---|---|---|---|---|---|
| 1 | Lift Station | 1 | LS | $550,000 | $550,000 |
| 2 | Generator | 1 | LS | $150,000 | $150,000 |
| 3 | Sanitary Sewer Collection | 1 | LS | $750,000 | $750,000 |
| 4 | 6-Inch Forcemain | 1 | LS | $56,000 | $56,000 |
| | | | Subtotal: | | $1,506,000 |
| | | | Contingency (20%): | | $301,200 |
| | | | Engineering (15%): | | $225,900.00 |
| | | | Total: | | $2,033,100 |

**CITY OF LA MARQUE**
**Impact Fee Study - Wastewater CIP Project No. 2**
**Cost Estimate**

Adico, LLC - Consulting Engineers

Project Name: Lift Station #16 Upgrade

| ITEM NO. | DESCRIPTION | QUANTITY | UNIT | UNIT PRICE | TOTAL ITEM COST |
|---|---|---|---|---|---|
| 1 | Lift Station Upgrade | 1 | LS | $375,000 | $375,000 |
| | | | Subtotal: | | $375,000 |
| | | | Contingency (20%): | | $75,000 |
| | | | Engineering (15%): | | $56,250.00 |
| | | | Total: | | $506,250 |

**CITY OF LA MARQUE**
**Impact Fee Study - Wastewater CIP Project No. 3**
**Cost Estimate**

Adico, LLC - Consulting Engineers

Project Name: Influent Lift Station Modification

| ITEM NO. | DESCRIPTION | QUANTITY | UNIT | UNIT PRICE | TOTAL ITEM COST |
|---|---|---|---|---|---|
| 1 | Influent Lift Station Upgrades | 1 | LS | $1,250,000 | $1,250,000 |
| | | | Subtotal: | | $1,250,000 |
| | | | Contingency (20%): | | $250,000 |
| | | | Engineering (15%): | | $187,500 |
| | | | Total: | | $1,687,500 |

**CITY OF LA MARQUE**
**Impact Fee Study - Wastewater CIP Project No. 4**
**Cost Estimate**

Adico, LLC - Consulting Engineers

Project Name: Wastewater Treatment Capacity to Serve 10 Year Projected Growth

| ITEM NO. | DESCRIPTION | QUANTITY | UNIT | UNIT PRICE | TOTAL ITEM COST |
|---|---|---|---|---|---|
| 1 | Wastewater Treatment Capacity | 1 | LS | $12,600,000 | $12,600,000 |
| | | | Subtotal: | | $12,600,000 |
| | | | Contingency (20%): | | $2,520,000 |
| | | | Engineering (15%): | | $378,000 |
| | | | Total: | | $15,498,000 |

**CITY OF LA MARQUE**
**Impact Fee Study - Wastewater CIP Project No. 5**
**Cost Estimate**

Adico, LLC - Consulting Engineers

Project Name: Newman Road Sanitary Sewer Extension

| ITEM NO. | DESCRIPTION | QUANTITY | UNIT | UNIT PRICE | TOTAL ITEM COST |
|---|---|---|---|---|---|
| 1 | 8" SDR 26, Sanitary Sewer | 5000 | LF | $115 | $575,000 |
| 2 | 16" Bore and Case | 200 | LF | $170 | $34,000 |
| 3 | Manhole | 8 | EA | $5,000 | $40,000 |
| | | | Subtotal: | | $649,000 |
| | | | Contingency (20%): | | $129,800 |
| | | | Engineering (15%): | | $19,470 |
| | | | Total: | | $798,270 |

# CITY COUNCIL AGENDA FORM

Meeting Date: March 10, 2025
Agenda Item: 9.II.
Prepared by: Alice Ashley
Reviewed by:
Department: Administration

**AGENDA ITEM DESCRIPTION:**
Submitting an application for the No-Match Lonestar Grant - *Police/Fire*

**STAFF BRIEFING:**
Approval to submit grant application for the FY26 Operation Lonestar Grant Fund for Police and Fire Equipment. This application is due as of March 13, 2025.

**HISTORY:**
La Marque was awarded $100,000 by the Lonestar Grant Program in November, 2024 to purchase Fire and SRT Equipment.

**FISCAL IMPACT:**
None- this is a NO-MATCH grant.

Name:

# Operation Lone Star Grant Program (OLS) - FY2026

| Available | Due Date |
| --- | --- |
| 01/13/2025 | 03/13/2025 |

## Purpose:

The Public Safety Office (PSO) is soliciting grant applications for local projects that support Operation Lone Star.

The purpose of the program is to enhance interagency border security operations supporting Operation Lone Star including the facilitation of directed actions to deter and interdict criminal activity. Program participants shall assist in the execution of coordinated border security operations to:

**Law Enforcement**

- Increase the effectiveness and impact of Operation Lone Star.
- Reduce border-related criminal activity in Texas.
- Implement and increase the effectiveness of operational methods, measures, and techniques for outbound/southbound operations.
- Decrease the supply of drugs smuggled into and through Texas from Mexico.
- Disrupt and deter operations of gang and cartel criminal organizations.
- Decrease specifically targeted tactics (such as conveyance methods) for drugs in the Texas border region.
- Decrease use of specific areas for crime as targeted in directed action missions.
- Increase the number and quality of analytical intelligence products developed at the Unified Command and state levels.
- Increase coordination between local and state law enforcement agencies in planning, execution, and analysis of border security operations.

**Jail Operations**

- Increase capacity for detention operations and other supporting functions associated with increased criminal activity due to surges in illegal migration.

**Human Remains Processing**

- Support county medical examiner offices in the humane processing of the remains of undocumented migrants.

**Court Administration**

- Increase capacity and expediency in case preparation, magistration, pre/post-adjudication proceedings, and criminal trials of OLS defendants.

**Fire/EMS Operations**

- Increase capacity for fire/EMS operations in direct support of OLS.

## Available Funding:

State funds for these projects are authorized under the Texas General Appropriations Act, Article I, for Trusteed Programs within the Office of the Governor. All awards are subject to the availability of appropriated funds and any modifications or additional requirements that may be imposed by law.

## Eligible Organizations:

1. Units of local government; and
2. Federally Recognized Native American tribes.
3. Eligible applicants must be a county, or a municipality located in a county that has issued a disaster declaration relating to border security. The applicant's county must also be included in the most current Governor's Proclamation renewing the Border Security Disaster Declaration.
4. Preference will be given to eligible applicants within or providing support services to a County that is:
5. adjacent to or a portion of which are located within 20 miles of an international border;
6. adjacent to two counties located on an international border with a population of more than 5,000 and less than 7,500 according to the most recent federal decennial census; or
7. adjacent to the Gulf Intracoastal Waterway, as defined by Section 51.002, Transportation Code;
8. Jurisdictions not physically located within a county described in item 4. above (border county) but applying to provide support services to a jurisdiction that is physically located within a border county must submit a letter of support, memorandum of

understanding or other similar documentation from the border county(ies) requesting their supportive services.

## Application Process:

Applicants must access the Office of the Governor's eGrants grant management website at https://eGrants.gov.texas.gov to register and apply for funding.

## Key Dates:

| Action | Date |
|---|---|
| Funding Anouncemtent Release | 01/13/2025 |
| Online System Opening Date | 01/13/2025 |
| Final Date to Submit and Certify an Application | 03/13/2025 at 5:00PM CST |
| Earliest Project Start Date | 03/13/2025 |

## Project Period:

Projects selected for funding must begin on or after September 1, 2025 and expire on or before August 31, 2026.

## Funding Levels

Minimum: $20,000

Maximum: $5,000,000

Match Requirement: None

## Standards

Grantees must comply with standards applicable to this fund source cited in the Texas Grant Management Standards (TxGMS), Federal Uniform Grant Guidance, and all statutes, requirements, and guidelines applicable to this funding.

## Eligible Activities and Costs

Funding may be used to provide additional personnel, equipment, supplies, contractual support, travel, and training in support of **Operation Lone Star** activities, including for any

one or more of the following activities.

**Operation Lone Star - Law Enforcement.** Activities related to law enforcement operations in support of OLS:

**LAW ENFORCEMENT PERSONNEL - OVERTIME**

- Overtime for increased patrol, search and rescue, recovery operations, and/or investigative capacity for certified peace officers.
- Overtime for law enforcement support personnel. These costs may include overtime for personnel necessary to support officers that are on patrol and participating in Operation Lone Star, such as Communications Officer/Dispatcher overtime necessary to maintain a safe Officer to Dispatcher ratio.
- Overtime for non-exempt administrative personnel supporting Operation Lone Star.
- Overtime backfill costs for non-border county agencies directly supporting OLS. Agencies must upload a letter of support from the border county for which the non-border county intends to provide law enforcement personnel.

**LAW ENFORCEMENT PERSONNEL – REGULAR or STRAIGHT-TIME & TEMPORARY POSITIONS**

- Augmentees: Personnel costs for law enforcement personnel who are not regular employees of a funded agency, but are brought on as needed to specifically cover border security operations so that there can be a force multiplier during Operation Lone Star.
- Regular time for law enforcement personnel working border operations. Grant funds must be used to supplement existing funds and not supplant funds that have been budgeted for the same purpose.
- Part-time to Full-Time: Personnel costs for part-time law enforcement personnel in order to bring them to temporary full-time status.
- Regular time for administrative personnel supporting OLS law enforcement activities.
- Hiring or contracting temporary staff to support OLS law enforcement activities.
- Personnel backfill costs for non-border county agencies directly supporting OLS. Agencies must upload a letter of support from the border county for which the non-border county intends to provide law enforcement personnel.

**LAW ENFORCEMENT - EQUIPMENT & TECHNOLOGY**

- Costs for equipment, technology, or the rental of equipment, which will benefit the

border security mission and will be routinely utilized during Operation Lone Star.

**LAW ENFORCEMENT - SUPPLIES and DIRECT OPERATING EXPENSE**

- General office supplies and program supplies related to OLS law enforcement activities. Operational costs are also allowable, such as vehicle operating costs or costs for minor emergency repairs as described below, or for other services pre-approved by the PSO that are critical to success of the program. Examples include:
    - The cost of fuel, lubricants, and minor emergency repairs or maintenance for vehicles, and similar equipment used during the hours in which grant-funded staff are working.
    - Only actual expenses supported by invoiced gas, oil, and repair or maintenance receipts may be reimbursed under this grant.
    - Maintenance costs must be prorated to show the usage of vehicles or equipment for regular law enforcement duties as compared to usage while officers are working grant-paid patrols.

**LAW ENFORCEMENT – TRAVEL & TRAINING**

- Travel, per diem, and lodging costs associated with personnel, augmentees, or contractors engaged in OLS activities.

**Operation Lone Star - Human Remains Processing.** Activities related to the humane processing of the remains of undocumented migrants:

**MEDICAL EXAMINER PERSONNEL – OVERTIME**

- Overtime for OLS death investigations conducted by a medical examiner, deputy examiner, trained technician, or a forensic pathologist as authorized under Article 49.25 of the Code of Criminal Procedure.
- Overtime for non-exempt administrative personnel supporting a County Medical Examiner's Office.

**MEDICAL EXAMINER PERSONNEL – REGULAR or STRAIGHT-TIME & TEMPORARY POSITIONS**

- Regular time for county medical examiner personnel conducting OLS death investigations. Grant funds must be used to supplement existing funds and not supplant funds that have been budgeted for the same purpose.
- Part-time to Full-Time: Personnel costs for part-time county medical examiner

personnel to bring them to temporary full-time status.
- Regular time for administrative personnel supporting a County Medical Examiner's Office.
- Hiring or contracting temporary staff to assist or conduct OLS death investigations.

**MEDICAL EXAMINER - EQUIPMENT & TECHNOLOGY**

- Costs for equipment, technology, or the rental of equipment related to the processing of OLS death investigations, temporary morgues, and/or additional body storage capacity.

**MEDICAL EXAMINER - SUPPLIES and DIRECT OPERATING EXPENSE**

- Costs for supplies and direct operating expenses related to conducting OLS death investigations.

**MEDICAL EXAMINER – CONTRACTUAL**

- Costs associated with the outsourcing of OLS death investigations, temporary body storage, and other contractual costs incurred by a county medical examiner's office related to the humane processing of the remains of undocumented migrants.

**Operation Lone Star – Jail Operations.** Activities related to the intake, processing, and holding of OLS inmates in local detention facilities.

**JAIL OPERATIONS PERSONNEL – OVERTIME**

- Overtime for jailers and support staff related to the intake, processing, and holding of OLS inmates.
- Overtime for non-exempt administrative personnel supporting a local detention facility.
- Overtime backfill costs for non-border county agencies directly supporting OLS. Agencies must upload a letter of support from the border county for which the non-border county intends to provide jailers.

**JAIL OPERATIONS PERSONNEL - REGULAR or STRAIGHT-TIME & TEMPORARY POSITIONS**

- Augmentees: Personnel costs for jailers who are not regular employees of a funded agency, but are brought on as needed to specifically assist in the intake, processing, and holding of OLS inmates.
- Regular time for jailers. Grant funds must be used to supplement existing funds and not

supplant funds that have been budgeted for the same purpose.

- Part-time to Full-Time: Personnel costs for part-time jailers to bring them to temporary full-time status.
- Regular time for administrative personnel supporting OLS corrections activities.
- Hiring or contracting temporary jail staff to support OLS corrections activities.
- Personnel backfill costs for non-border county agencies directly supporting OLS. Agencies must upload a letter of support from the border county for which the non-border county intends to provide jailers.

**JAIL OPERATIONS - EQUIPMENT & TECHNOLOGY**

- Costs for equipment, technology, or the rental of equipment related to the intake, processing, and holding of OLS inmates.

**JAIL OPERATIONS - SUPPLIES and DIRECT OPERATING EXPENSE**

- Costs for office supplies, program supplies, and other direct operating expenses related to the intake, processing, and holding of OLS inmates. Examples include: Inmate transportation to court proceedings or state custody.

**JAIL OPERATIONS – CONTRACTUAL**

- Costs associated with outsourcing OLS inmates to other county jail facilities and/or other contractual costs incurred by a county jail facility related to the intake, processing, and holding of OLS inmates.

**JAIL OPERATIONS – TRAVEL & TRAINING**

- Travel, per diem, and lodging costs associated with jail personnel, augmentees, or contractors engaged in OLS corrections activities.

**Operation Lone Star – Court Administration.** Activities related to the case preparation, magistration, pre/post-adjudication proceedings, and criminal trials of OLS defendants.

**COURT ADMINISTRATION PERSONNEL – OVERTIME**

- Overtime for courtroom staff, court coordinators, and clerks supporting court operations, including but not limited to, case preparation, magistration, pre/post-adjudication proceedings, and criminal trials for OLS defendants.

**COURT ADMINISTRATION PERSONNEL - REGULAR or STRAIGHT-TIME & TEMPORARY**

**POSITIONS**

- Regular time for courtroom staff, court coordinators, and clerks. Grant funds must be used to supplement existing funds and not supplant funds that have been budgeted for the same purpose.
- Part-time to Full-Time: Personnel costs for part-time courtroom staff, court coordinators, and clerks to bring them to temporary full-time status.
- Hiring or contracting temporary courtroom staff, court coordinators, and clerks to support OLS courts activities.

**COURT ADMINISTRATION - EQUIPMENT & TECHNOLOGY**

- Costs for equipment and technology to support court operations, including but not limited to, case preparation, magistration, pre/post-adjudication proceedings, and criminal trials for OLS defendants.

**COURT ADMINISTRATION - SUPPLIES and DIRECT OPERATING EXPENSE**

- Costs for office supplies, program supplies, and other direct operating expenses to support court operations, including but not limited to, magistration, pre/post-adjudication proceedings, and criminal trials for OLS defendants.

**COURT ADMINISTRATION – CONTRACTUAL**

- Costs associated with contractual costs incurred to support court operations, including but not limited to, magistration, pre/post-adjudication proceedings, and criminal trials for OLS defendants.

**Operation Lone Star – Fire/EMS Operations.** Activities related to emergency response efforts provided by locally operated Fire/EMS agencies.

**FIRE/EMS OPERATIONS (RESCUE) – OVERTIME**

- Overtime for increased rescue call volume, search and rescue, and/or recovery operations.
- Overtime for rescue support personnel. These costs may include overtime for personnel necessary to support rescue personnel that are operating on incident scenes and participating in Operation Lone Star, such as telecommunications professional overtime necessary to maintain a safe responder to dispatcher ratio.
- Overtime for non-exempt administrative personnel supporting Operation Lone Star.

**FIRE/EMS OPERATIONS (RESCUE) – REGULAR or STRAIGHT-TIME & TEMPORARY POSITIONS**

- Part-time to Full-time: Personnel costs for part-time rescue personnel in order to bring them to temporary full-time status.
- Hiring or contracting temporary staff to support OLS rescue activities.

**FIRE/EMS OPERATIONS - EQUIPMENT & TECHNOLOGY**

- Costs for equipment, technology, or the rental of equipment, which will benefit the border security mission and will be routinely utilized during Operation Lone Star.

**FIRE/EMS OPERATIONS (RESCUE) – SUPPLIES and DIRECT OPERATING EXPENSE**

- General office supplies and program supplies related to OLS rescue activities. Operational costs are also allowable, such as vehicle operating costs or costs for minor emergency repairs as described below, or for other services pre-approved by the PSO that are critical to success of the program. Examples include:
  - Costs associated with fuel, lubricants, and minor emergency repairs or maintenance for vehicles, and similar equipment used during the hours in which grant-funded staff are working.
  - Only actual expenses supported by invoiced gas, oil, and repair or maintenance receipts may be reimbursed under this grant.
  - Maintenance costs must be prorated to show the usage of vehicles or equipment for regular rescue duties as compared to usage while first responders are working grant-funded rescue operations.
- **FIRE/EMS OPERATIONS – TRAVEL & TRAINING**
  - Travel, per diem, and lodging costs associated with personnel, augmentees, or contractors engaged in OLS activities.

## Program-Specific Requirements

1. Eligible applicants, as applicable, assure to continue and/or renew a local disaster declaration relating to border security for the entirety of the project period. The expiration or dissolution of a local disaster declaration may result in the early termination of the grant agreement.

2. Eligible applicants in a border county, as described in the Eligible Organizations section, must upload a letter from the county attorney expressing their office's active participation in prosecuting misdemeanor and felony offenses, as appropriate, in support of Operation Lone

Star.

3. Eligible applicants performing law enforcement functions must agree to perform the following activities:

- Participate in operational planning and coordination meetings, information/intelligence sharing meetings, and After Action Reviews (AARs) established by the Texas Department of Public Safety's (DPS) Joint Operations and Intelligence Centers (JOICs).
- Participate weekly on the JOIC Unified Command conference calls or meetings as required by the JOIC.
- Report significant border-related events that occur during each 24-hour period.
- Conduct enhanced law enforcement patrolling activities if funded for those activities through this grant and recognize/react to information/intelligence to adjust times and locations of enhanced patrol activities.
- Identify significant border-related trends or areas of interest that may be developed into focus areas for future operations.
- Conduct surveillance, interdictions, investigations, and collect and disseminate information within its jurisdiction or cross-jurisdiction lines as required.
- Submit information on incidents using the Border Incident Assessment Report (BIAR).
    - The grantee shall report all border-related incidents to the appropriate JOIC using the BIAR. BIAR reporting shall include events that occur during Enhanced Operation activities AND events that occur during Steady State activities. Enhanced (Surge) Operations originate out of the use of Lone Star funds when the local agency chooses to increase the hours of patrol or investigations. Steady State activities are defined as normal patrol or investigative duties that do not use grant funds, but directly impact the overall Lone Star mission, such as organized crime arrests, terroristic activities, weapons trafficking arrests, kidnappings, human trafficking, human smuggling, home invasions with a border or organized crime nexus, illegal immigration, border-related murders, gang-related murders, vehicle thefts, or drug trafficking.
    - The BIAR is the primary incident and information-reporting tool for the grantee in local border security operations. The grantee shall ensure all BIARs conform to the respective standards outlined by the JOIC and are submitted within 24 hours of the end of shift and/or the timeframes established by the JOIC.

4. Applicants performing overtime activities must provide a copy of the local overtime policy as approved by its governing board. This policy will be considered the official policy for grant purposes and must be used throughout the grant period. The policy must:

- Clearly describe how overtime will be calculated;
- Be consistent with the agency's local overtime policy;
- Treat overtime for grant-paid personnel the same as non-grant paid personnel.

5. Project Overtime (OT) shall be reimbursed following the grantee's overtime policy and the requirements as stated below:

- OT is time actually worked that exceeds the required number of hours during an employee's designated work period, as per grantee's policies and procedures.
- OT must be worked to support border security operations.
- The project OT rate shall be no more than one-and-one-half (1.5) times the employee's regular pay rate.
- Exempt salaried employees working border security operations may be reimbursed for overtime only if the grantee's overtime policy specifically allows for this.
- PSO will only reimburse the grantee for OT that does not exceed a total of 16 hours worked (regular plus OT) during any 24-hour period.

## Eligibility Requirements

1. Local units of governments must comply with the Cybersecurity Training requirements described in Section 772.012 and Section 2054.5191 of the Texas Government Code. Local governments determined to not be in compliance with the cybersecurity requirements required by Section 2054.5191 of the Texas Government Code are ineligible for OOG grant funds until the second anniversary of the date the local government is determined ineligible. Government entities must annually certify their compliance with the training requirements using the Cybersecurity Training Certification for State and Local Governments. A copy of the Training Certification must be uploaded to your eGrants application. For more information or to access available training programs, visit the Texas Department of Information Resources Statewide Cybersecurity Awareness Training page.

2. Entities receiving funds from PSO must be located in a county that has an average of 90%

or above on both adult and juvenile dispositions entered into the computerized criminal history database maintained by the Texas Department of Public Safety (DPS) as directed in the Texas Code of Criminal Procedure, Chapter 66. The disposition completeness percentage is defined as the percentage of arrest charges a county reports to DPS for which a disposition has been subsequently reported and entered into the computerized criminal history system.

Counties applying for grant awards from the Office of the Governor must commit that the county will report at least 90 percent of convictions within five business days to the Criminal Justice Information System at the Department of Public Safety.

3. Eligible applicants operating a law enforcement agency must be current on reporting complete UCR data and the Texas specific reporting mandated by 411.042 TGC, to the Texas Department of Public Safety (DPS) for inclusion in the annual Crime in Texas (CIT) publication. To be considered eligible for funding, applicants must have submitted a full twelve months of accurate data to DPS for the most recent calendar year by the deadline(s) established by DPS. Due to the importance of timely reporting, applicants are required to submit complete and accurate UCR data, as well as the Texas-mandated reporting, on a no less than monthly basis and respond promptly to requests from DPS related to the data submitted.

4. In accordance with Texas Government Code, Section 420.034, any facility or entity that collects evidence for sexual assault or other sex offenses or investigates or prosecutes a sexual assault or other sex offense for which evidence has been collected, must participate in the statewide electronic tracking system developed and implemented by the Texas Department of Public Safety. Visit DPS's Sexual Assault Evidence Tracking Program website for more information or to set up an account to begin participating. Additionally, per Section 420.042 "A law enforcement agency that receives evidence of a sexual assault or other sex offense...shall submit that evidence to a public accredited crime laboratory for analysis no later than the 30th day after the date on which that evidence was received." A law enforcement agency in possession of a significant number of Sexual Assault Evidence Kits (SAEK) where the 30-day window has passed may be considered noncompliant.

5. Local units of government, including cities, counties and other general purpose political subdivisions, as appropriate, and institutions of higher education that operate a law enforcement agency, must comply with all aspects of the programs and procedures utilized by the U.S. Department of Homeland Security ("DHS") to: (1) notify DHS of all information requested by DHS related to illegal aliens in Agency's custody; and (2) detain such illegal

aliens in accordance with requests by DHS. Additionally, counties and municipalities may NOT have in effect, purport to have in effect, or make themselves subject to or bound by, any law, rule, policy, or practice (written or unwritten) that would: (1) require or authorize the public disclosure of federal law enforcement information in order to conceal, harbor, or shield from detection fugitives from justice or aliens illegally in the United States; or (2) impede federal officers from exercising authority under 8 U.S.C. § 1226(a), § 1226(c), § 1231(a), § 1357(a), § 1366(1), or § 1366(3). Lastly, eligible applicants must comply with all provisions, policies, and penalties found in Chapter 752, Subchapter C of the Texas Government Code.

Each local unit of government, and institution of higher education that operates a law enforcement agency, must download, complete and then upload into eGrants the CEO/Law Enforcement Certifications and Assurances Form certifying compliance with federal and state immigration enforcement requirements. This Form is required for each application submitted to OOG and is active until August 31, 2026 or the end of the grant period, whichever is later.

6. Eligible applicants must be registered in the federal System for Award Management (SAM) database and have an UEI (Unique Entity ID) number assigned to its agency (to get registered in the SAM database and request an UEI number, go to https://sam.gov/).

Failure to comply with program eligibility requirements may cause funds to be withheld and/or suspension or termination of grant funds.

## Prohibitions

Grant funds may **not** be used to support the unallowable costs listed in the **Guide to Grants** or any of the following unallowable costs:

1. Inherently religious activities such as prayer, worship, religious instruction, or proselytization;
2. Lobbying;
3. Any portion of the salary of, or any other compensation for, an elected or appointed government official;
4. Vehicles or equipment for government agencies that are for general agency use;
5. Weapons, ammunition, tasers, or explosives;
6. Admission fees or tickets to any amusement park, recreational activity or sporting event;
7. Promotional gifts;
8. Food, meals, beverages, or other refreshments, except for eligible per diem associated

with grant-related travel;
9. Membership dues for individuals;
10. Any expense or service that is readily available at no cost to the grant project;
11. Any use of grant funds to replace (supplant) funds that have been budgeted for the same purpose through non-grant sources;
12. Fundraising;
13. Salary stipends;
14. Construction;
15. Aircraft (fixed wing & rotary wing including sUAS, drones, unmanned aerial aircraft);
16. Fire engines;
17. Ambulances (types 1, 2, & 3);
18. Any other prohibition imposed by federal, state, or local law.

## Selection Process

PSO will screen all applications to ensure that they meet the requirements included in the funding announcement.

Applications will then be reviewed by PSO staff members, or a review group selected by the executive director. PSO will make all final funding decisions based on eligibility, reasonableness, availability of funding, and cost-effectiveness.

The Office of the Governor may not fund all applications or may only award part of the amount requested. In the event that funding requests exceed available funds, the Office of the Governor may revise projects to address a more limited focus.

## Contact Information

For more information, contact the eGrants help desk at eGrants@gov.texas.gov or (512) 463-1919.

Total Funds
**$TBD**

**RESOLUTION NO. 2025-XXX**

**A RESOLUTION OF THE CITY COUNCIL OF THE CITY OF LA MARQUE, TEXAS, GRANT APPLICATION SUBMISSION AND SIGNATORY DESIGNATION FOR CONTRACTUAL DOCUMENTS PERTAINING TO THE PUBLIC SAFETY OFFICE (PSO), OPERATION LONE STAR GRANT PROGRAM (FY 2026)**

**WHEREAS;** the City of La Marque, Texas is in preparation of an application to the Public Safety Office (PSO), for the Operation Lone Star Grant Program; and

**WHEREAS;** the City of LaMarque, Texas finds it in the best interest of the citizens of the City of La Marque that the city be operated for the FY 2025-2026; and

**WHEREAS;** it is necessary to appoint persons to execute contractual application documents directly pertaining to the application submittal to the Public Safety Office (PSO), for the Operation Lone Star Grant Program**;** and

**WHEREAS;** the City of La Marque, Texas, acknowledges that if an authorized signatory of the City changes (elections, illness, resignations, etc.) the City shall provide them with a resolution stating the new authorized signatory shall be and

**WHEREAS,** the City of La Marque, Texas, agrees that in the event of loss or misuse of the Office of the Governor funds, the City of La Marque, Texas, assures that the funds will be returned to the Office of the Governor in full.

**NOW, THEREFORE, BE IT RESOLVED BY THE CITY COUNCIL OF THE CITY OF LA MARQUE, TEXAS AS FOLLOWS:**

**WHEREAS;** the City of La Marque designates the City Manager, as the grantee's authorized official. The authorized official is given the power to apply for, accept, reject, alter, or terminate the grant on behalf of the applicant agency.

**NOW THEREFORE, BE IT RESOLVED;** that City of La Marque, Texas approves submission of the grant application for the Public Safety Office (PSO), Operation Lone Star Grant Program.

**PASSES, APPROVED, AND ADOPTED** by City Council of the City of La Marque on this the **_____**day of _____**, 2025**.

**CITY OF LA MARQUE, TEXAS**

_____
Keith Bell
Mayor

**ATTEST:**

_____
Kierra Nance
City Clerk

# CITY COUNCIL AGENDA FORM

Meeting Date: March 10, 2025
Agenda Item: 9.III.
Prepared by: Amanda Hobby
Reviewed by:
Department: Public Works

**AGENDA ITEM DESCRIPTION:**
Approving the purchase DuraPatcher P2 Trailer from Monmouth Solutions, Inc. utilizing allocated ARPA Funds in the amount of $144,499.00 - *Public Works*

**STAFF BRIEFING:**
The City received two (2) bids for the Pothole Patching Trailer - R.B. Everett & Co. for the amount of $100,006.00 (which was an incomplete bid), and Monmouth Solutions for the amount of $144,499.00.

**HISTORY:**
The city currently uses bagged as well as loose cold mix to patch potholes.

**FISCAL IMPACT:**
Allocated ARPA Funds - $144,499.00

# City of La Marque

1111 Bayou Road
La Marque, Texas 77568

## REQUEST FOR PROPOSALS (RFP)
## COMPETITIVE PROCUREMENT FOR
## GENERAL SERVICES, SUPPLIES, AND/OR EQUIPMENT

This RFP is being supported

by federal award number [RCP-056096]

allocated to the

## City of La Marque

under the

## American Rescue Plan Act (ARPA)

## Coronavirus State and Local Fiscal Recovery Funds (SLFRF)

## by the U.S. Department of the Treasury

**Prepared By: Department of Public Works**

## Procurement Reference #2467

## American Rescue Plan Act (ARPA)
## Request for Proposals (RFP)

Date: November 14, 2024

Re: Request for Proposals (RFP) for Trailer Mounted Pothole Patcher with DuraPatcher Technology funded with Coronavirus State and Local Fiscal Recovery Funds (SLFRF) Allocated Under the American Rescue Plan Act (ARPA)

Dear Vendor:

The City of La Marque, hereinafter called "Entity", has received an allocation of American Rescue Plan Act (ARPA) funds, and is issuing a Request for Proposals (RFP) for a general purchases and supplies contract. The item(s) are being solicited to assist the Entity in completing and implementing programs and/or projects funded with its allocation of ARPA funds.

The Sole Point of Contact for this solicitation may provide information regarding this RFP. Refer to the **Schedule of Events and Selection Summary** in Section 1 of this document for response details.

Respondent is responsible for ensuring that their RFP response is received in a timely manner and that it contains all elements of the RFP, including all required forms and any addendums issued. Respondent should complete the Solicitation Response Cover Sheet/Acknowledgement of Addenda/Submission Checklist contained in Attachment A and all other requirements identified in the RFP. RFP responses received after the deadline will not be opened and therefore not evaluated or considered for award, regardless of whether or not the delay was outside the control of the submitting provider. The City of La Marque reserves the right to negotiate with providers submitting timely responses in accordance with state and federal procurement requirements, to reject any and all bids, and to select multiple respondents if it deems it's in the best interest of the Entity and/or desires to do so.

The Entity is an Affirmative Action/Equal Opportunity Employer. Minority Business Enterprises, Small Business Enterprises, Women Business Enterprises, and Labor Surplus Area firms are encouraged to submit bids.

**CONTENTS** **PAGE**


**AMERICAN RESCUE PLAN ACT (ARPA) REQUEST FOR PROPOSALS (RFP)** **2**

**REQUEST FOR PROPOSALS – GENERAL INFORMATION** **4**

**SECTION 1 – SCHEDULE OF EVENTS AND SELECTION SUMMARY** **4**

**SECTION 2 – INTRODUCTION AND GENERAL CONDITIONS** **6**

**SECTION 3 – SCOPE OF WORK/TECHNICAL SPECIFICATIONS** **9**

**SECTION 4 – EVALUATION CRITERIA** **12**

**SECTION 5 – RESPONSE SUBMISSION REQUIREMENTS** **14**

**LIST OF EXHIBITS** **16**

EXHIBIT A: PROJECT SCOPE OF WORK 17

EXHIBIT B: REQUIRED CONTRACT PROVISIONS 18

EXHIBIT C: OTHER RELEVANT INFORMATION/SPECIAL CONDITIONS 31

**LIST OF ATTACHMENTS A THROUGH L** **32**

ATTACHMENT A: SOLICITATION RESPONSE COVER SHEET/ACKNOWLEDGEMENT OF ADDENDA/SUBMISSION CHECKLIST 33

ATTACHMENT B: PRICING SHEET 35

ATTACHMENT C: SYSTEM FOR AWARD MANAGEMENT (SAM.GOV) RECORD SEARCH 36

ATTACHMENT D: CUSTOMER/CLIENT REFERENCES 38

ATTACHMENT E: CERTIFICATE OF INSURANCE (IF APPLICABLE) 41

ATTACHMENT F: ETHICS AND CONFLICT OF INTEREST ACKNOWLEDGEMENT 42

ATTACHMENT G: STATEMENT OF CONFLICTS OF INTEREST (IF ANY) 43

ATTACHMENT H: CONFLICT OF INTEREST QUESTIONNAIRE FORM (CIQ) 44

ATTACHMENT I: DISCLOSURE OF LOBBYING ACTIVITIES SF-LLL CERTIFICATION 46

ATTACHMENT J: TEC CERTIFICATE OF INTERESTED PARTIES (FORM 1295) 48

ATTACHMENT K: BIDDER'S CERTIFICATION 49

ATTACHMENT L: NON-COLLUSION AFFIDAVIT 50

**APPENDIX I – SAMPLE CONTRACT** **51**

## SECTION 1 – SCHEDULE OF EVENTS AND SELECTION SUMMARY

1.1 **SCHEDULE OF EVENTS – ALL DATES ARE TENTATIVE**

1.1.1 The Entity reserves the right to change dates at any time. At the sole discretion of the Entity, events listed in Section 1 are subject to scheduling changes and cancellation. The Entity will make public any changes to the stated schedule.

1.1.2 All requests, questions, or other communication about this solicitation shall be made in writing and addressed to the Entity's Sole Point of Contact listed in the **Schedule of Events + Response Requirements** that follow. Only the Sole Point of Contact may be contacted regarding required elements for this RFP.

1.1.3 **Respondent must review all documents and information in the *Exhibits* section and complete the required documents in the *Attachments* section. The completed Attachments, including the signed Pricing Sheet, must be contained within the Proposal Response and submitted to the Point of Contact listed in the Schedule of Events + Response Requirements that follow.**

### SCHEDULE OF EVENTS + RESPONSE REQUIREMENTS

| SCHEDULE OF EVENTS | |
|---|---|
| **RFP NOTICE DATE:** | November 14, 2024 |
| **VENDOR QUESTIONS DUE:** | November 21, 2024 5:00 p.m. |
| **QUESTIONS ANSWERED BY:** | November 27, 2024 |
| **MANDATORY PRE-PROPOSAL CONFERENCE:** | None |
| **MANDATORY SITE VISIT:** | None |
| **PROPOSAL DUE DATE:** | December 5, 2024, 10:00 a.m. |
| **BID OPENING DATE:** | December 5, 2024 10:30 a.m. |
| **ESTIMATED AWARD DATE:** | December 9, 2024 |
| **RESPONSE REQUIREMENTS** | |
| **QUESTIONS & ANSWERS ONLY – SOLE POINT OF CONTACT** | |
| The Entity will allow written questions and requests for clarification of this solicitation. Questions must be submitted by email to the Sole Point of Contact listed below. Respondents' names will be removed from questions in any responses released. | |
| **SOLE POINT OF CONTACT NAME:** | City Clerk |

| | |
|---|---|
| **ADDRESS:** | 1111 Bayou Road La Marque, TX 77568 |
| **EMAIL:** | bids@cityoflamarque.org |
| **PHONE:** | 409-938-9259 |
| **DELIVERY OF RESPONSE PROPOSAL – POINT OF CONTACT** | |
| **For digital delivery,** the Subject Line should include Respondent's Name, RFP number, and time/due date of RFP and completed response and all attachments uploaded to the following point of contact: | |
| **NAME:** | - |
| **TITLE:** | City Clerk |
| **DELIVERY POINT:** | Bidsubmit.cityoflamarque.org |
| | |
| **If mailed or hand-delivered,** sealed proposals (an original and 3 copies) should be submitted on the original forms provided. Each response must be sealed and should be placed in a properly identified envelope with Respondent's Name, RFP number, and time/due date of RFP. | |
| **For mail or hand-delivery,** deliver response and all attachments to: | |
| **NAME:** | - |
| **TITLE:** | City Clerk |
| **ADDRESS:** | 1111 Bayou Road LaMarque, TX 77568 |
| | |
| | |

## 1.2 SELECTION OF RESPONDENT(S)

1.2.1 The Entity intends to select Respondent(s) that best meet the needs of the Entity and that provide the best overall value. The Entity reserves the right to award multiple contracts from the finalist pool of successful Respondent(s). Respondents will be rated and ranked according to the evaluation criteria set forth below. The Entity intends to enter into negotiations with the top-ranked Respondent (i.e., the most highly qualified) and attempt to negotiate a fair and reasonable price; if negotiations fail, the Entity shall formally end negotiations with that respondent and attempt to negotiate with the next most highly qualified provider. The Entity shall proceed in like manner until it has contracted with a sufficient number of providers to respond to the identified scope of work.

1.2.2 The Entity reserves the right to check references on any projects performed by the Respondent, whether provided by the Respondent or known by the Entity.

1.2.3 The Entity is not required to accept the lowest cost proposal.

1.2.4 The Entity may make such investigation as deemed necessary to determine the ability of the Respondent to perform the work, and the Respondent shall furnish to the Entity all such information by the date specified by the Entity.

1.2.5 The Entity may conduct such investigations as it deems necessary or appropriate to assist in the evaluation of any RFP response and to establish the responsibility, qualifications, and financial ability of the Respondent, their proposed subcontractors, and other persons or organizations submitted within a Respondent's response to do the work to the Entity's satisfaction within the prescribed time.

1.2.6 The Entity reserves the right to conduct interviews of short-listed Respondent(s) prior to making a final selection.

1.2.7 The Entity reserves the right to contact references as deemed necessary to complete its analysis.

**See SECTION 4 – EVALUATION CRITERIA, for additional information on how Respondents will be evaluated and selected.**

# SECTION 2 – INTRODUCTION AND GENERAL CONDITIONS

## 2.1 GENERAL DESCRIPTION OF THE SCOPE OF WORK (SOW) – SEE *SECTION 3* AND *EXHIBIT A* FOR SOW DETAILS

The Entity has received an allocation of American Rescue Plan Act (ARPA) funds and is issuing a Request for Proposals (RFP) for a general purchases and supplies contract. The item(s) are being solicited to assist the Entity in completing and implementing programs and/or projects funded with its allocation of ARPA funds.

This solicitation includes purchase of:

2.1.1 **General Description:** Examples: Trailer Mounted Pothole Patcher with DuraPatcher Technology

2.1.2 The scope of work includes all labor, materials, goods and/or services necessary to provide the purchased items, including any installation specified in **Exhibit A**. The respondent shall submit a written copy of all warranty information prior to final acceptance by Entity.

2.1.3 **REFERENCED BRAND EXAMPLE:** Catalogs, brand names or manufacturer's references are descriptive only and indicate type and quality desired. Proposals on brands of like nature and quality will be considered. If proposing other than the referenced brands/model number, Respondent must show manufacturer, brand or trade name, product number and provide complete descriptive information of product offered and include with response. Failure to take exception to specifications or reference data will require Respondent to furnish specified brand names, numbers, etc.

**2.2 CONSIDERATION OF AWARD**

To be considered for award, Respondents must adhere to the requirements, when applicable to Vendors, as set forth in **Exhibit B**, the ARPA Required Provisions, and provide all other required information and documentation as set forth in this solicitation.

**2.3 CONTRACT AWARD**

The Entity may award a Firm Fixed Price Contract. A Respondent's proposal must be responsive to this solicitation and include all required documents as instructed in the solicitation and listed in the *Solicitation Response Cover Sheet/Acknowledgement of Addenda/Submission Checklist* **(Attachment A)**.

**2.4 TERM OF PURCHASE CONTRACT**

The Contract or Purchase Order shall be effective upon date of execution (signed by the Entity designee), shall contain terms and conditions for the purchase, including delivery date and delivery location, and shall expire upon delivery and final acceptance by the Entity. A sample contract is available for review at **Appendix I**.

**2.5 BID ACCEPTANCE**

2.5.1 Proposals must be <u>received</u>, time stamped or otherwise acknowledged before the specified hour and date. Late submittals <u>WILL NOT</u> be considered under any circumstances. The Entity will not be held responsible for any solicitation response that is mishandled prior to receipt by the Entity. The Entity will not be responsible for any technical issues that result in late delivery, inappropriately identified documents, or other submission error that may lead to disqualification (including substantive or administrative) or nonreceipt of the Respondent's response.

2.5.2 The Entity reserves the right to accept or reject any and all proposals, to accept any proposal deemed advantageous and to waive irregularity in the proposals. By submitting a response, the Respondent acknowledges and will adhere to all specifications as stated within this procurement packet.

2.5.3 Proposals CANNOT be altered or amended after the due date. Any alterations made before the due time must be initialed by Respondent or authorized agent. No response may be withdrawn after due date without approval and based on a written acceptable reason.

2.5.4 The Entity reserves the right to revise or amend the specifications prior to the due date. Such revisions or amendments, if any, will be announced by amendments or addendums to these specifications. Copies of such amendments or addendums so issued will be posted to the Entity's bidding websites. If Respondent demonstrates just reason for a change, the Entity must have at least five (5) working days' notice prior to submission due date.

2.5.5 In the event that Respondent finds discrepancies in or omissions from the specifications or other documents or be in doubt as to their meaning, Respondent should at once notify the Entity Sole Point of Contact and obtain clarification prior to submitting a response.

2.5.6 All Respondents must meet or exceed the minimum specifications to be considered a valid response. The Entity reserves the right to accept or reject all or any part of any response, waive minor technicalities and award the contract either to the lowest responsible Respondent or to the Respondent who provides goods or services at the best value for the Entity.

2.5.7 The Respondent agrees to protect the Entity from claims involving infringement of patents or copyrights.

PROPRIETARY OR CONFIDENTIAL INFORMATION; TEXAS PUBLIC INFORMATION ACT: Any proprietary, trade secret, or otherwise confidential information Respondent includes in its Proposal must be clearly labeled as proprietary or confidential information, and Respondent must identify the specific exception to disclosure in the Public Information Act (PIA). Merely making a blanket claim that the entire Proposal is protected from disclosure because it contains some proprietary information is not acceptable and shall make the entire Proposal subject to release under the PIA. Any information which is not clearly identified as proprietary or confidential shall be deemed to be subject to disclosure pursuant to the PIA.

Information, documentation, and other material in connection with this Response or any resulting Contract may be subject to public disclosure under the Texas PIA, Chapter 552 of the Texas Gov't Code.

2.5.8 There is no guarantee a contract will be awarded. The Entity reserves the right to cancel this RFP at any time.

2.5.9 All proposals become public documents and are subject to public review (upon request and as allowed by law). The submission of an RFP response will constitute representation by the Respondent that it understands and has complied with the requirements of the RFP. Submission of a response indicates the RFP information provided was sufficient in scope and detail to convey understanding of anticipated terms and conditions for performance of the work.

2.5.10 RFP Respondents assume all costs of preparation of the proposal. RFP responses become the property of the Entity.

**2.6 PROHIBITED COMMUNICATION**

On issuance of this solicitation, except for the written inquiries described in Section 2.6 above, the Entity, its representative(s), or partners will not answer any questions or otherwise discuss the contents of this solicitation with any potential respondent. This restriction does not preclude discussions between affected parties for the purposes of conducting business unrelated to this solicitation. Failure to comply with these requirements may result in disqualification of respondent's solicitation response.

**2.7 TERMINATION CONDITIONS**

See Contract at **Appendix I** for Termination Conditions.

2.7.1 **FAILURE TO ENTER INTO A CONTRACT**

Should the Selected Respondent ("Vendor"), to whom the contract is awarded, fail to enter into a contract within twenty-one (21) business days, the Entity may then, at its option, retain the Vendor's bid deposit/bond (if required) and accept the bid of the next lowest responsible bidder.

## SECTION 3 – SCOPE OF WORK/TECHNICAL SPECIFICATIONS

### 3.1 MINIMUM REQUIREMENTS

3.1.1 The selected Vendor shall have no convictions or civil judgments preceding nor thereafter this solicitation rendered against Respondent for 1) commission of fraud or a criminal offense in connection with obtaining, attempting to obtain, or performing a public (federal, state or local) transaction or contract under a public transaction; 2) violation of federal or state antitrust statutes or commission of embezzlement, theft, forgery, bribery, falsification or destruction of records, making false statements, or receiving stolen property.

3.1.2 The selected Vendor shall not ever have been indicted for or otherwise criminally or civilly charged by a government entity (federal, state, or local) with commission of any of the offenses enumerated above.

3.1.3 Where applicable, Vendor's staff must meet and maintain current certifications and or licensure requirements as mandated by state law or the appropriate licensing authority.

3.1.4 Vendor must not be debarred at the time of response submission, and prior to award of a contract. The System for Award Management (SAM.gov) and the Texas Comptroller's Debarred Vendor List will be checked to ensure the Vendor is not excluded from contract participation at the federal level. If the Vendor is debarred, the Vendor's proposal will not be evaluated.

### 3.2 SCOPE OF SERVICES Construct

3.2.1 **The required products or services shall be provided in accordance with attached Exhibits:**

- **Exhibit A:** Project Scope of Work
- **Exhibit B:** ARPA Required Provisions
- **Exhibit C:** Other Relevant Information

3.2.2 **Work Orders**

During the term of any contract awarded, the Entity may request the Vendor to perform certain tasks as described in the scope, subject to a specific work order authorization. All work authorizations shall be in writing, signed by all parties, and shall include a scope of services, a list of tasks to be performed, a time schedule, a list of deliverables and such other information or special conditions as may be necessary for the work requested.

3.2.3 **Condition of Product:** New Equipment ONLY; NO re-manufactured or "gray market" items. All items must be covered by the manufacturer's warranty. The unit(s) shall be made ready for continuous operation upon delivery. Respondent is cautioned that any unit delivered to the FOB point that does not meet specifications in every aspect will not be accepted.

3.2.4 **All Parts:** All parts not specifically mentioned which are necessary for the unit to be complete and ready for operation or which are normally furnished as standard equipment shall be furnished by the vendor. All parts shall conform in strength, quality, and workmanship to the accepted standards of the industry.

3.2.5 **Manuals:** Manuals containing illustrated parts list and operating and service instructions for the units shall be delivered with units. Manuals shall outline all necessary service and operating instructions for the units delivered and provide necessary warning and safety precautions.

3.2.6 **Warranty Requirements:** The units shall be warranted against defects in material and workmanship for a standard manufacturer's warranty and shall cover 100% parts and labor for the units. Vendor shall furnish warranty and a list of warrantied repair companies to the Entity at time of delivery. The warranty begins on the date the units are determined to meet specifications and accepted by the Entity.

**3.3 DELIVERY AND ACCEPTANCE**

3.3.1 **Freight Charges:** Shipping shall be Free on Board (FOB) destination; therefore, unit prices must include all shipping, handling, fuel surcharges, and delivery fees.

3.3.2 **Delivery Schedule:** Recommended delivery not to exceed 90 calendar days from date of award; delivery terms may be a factor in determining award. Respondent must contact the Entity point of contact to schedule delivery date and time. Respondent shall provide a minimum forty-eight (48) hours' notice prior to delivery.

**3.4 DELIVERY CONTACT(S):** Respondent shall contact the Entity for delivery a minimum of one (1) week in advance to coordinate delivery.

| | |
|---|---|
| **Delivery Contact Name:** | City Clerk |
| **Phone:** | (409) 938-9259 |
| **Email:** | bids@cityoflamarque.org |

**3.5 REGISTRATION AND TITLING (when applicable):** Permanent registration and titling will be performed by **the Entity**. **DO NOT REGISTER ITEM**. Respondent shall supply, as applicable, dealer's tag for item for sixty (60) days from date of delivery. The original Certificate of Origin (COO) or Manufacturer's Statement of Origin (MSO) as well as the most current version of TXDMV Form 130U or Application for Texas Title with signature shall be submitted with an invoice to the Entity.

**3.6 DELIVERY DELAYS:** If delay is foreseen, Respondent shall give written notice to the Entity and must keep the Entity advised of status of order at all times. Default in promised Delivery Days After Receipt of Order (ARO) without accepted reasons or failure to meet specifications authorizes the Entity to cancel contract/Purchase Order.

**3.7 COMPLIANT PRODUCTS:** Delivery does not occur until the Respondent delivers products, materials, or services in full compliance with the specifications to Entity's FOB destination, unless delivery is specifically accepted, in whole or in part, by the Entity. Providing products, materials, or services which do not meet all specification requirements does not constitute delivery. Entity reserves the right to require new delivery or a refund in the event that materials or products not meeting specifications are discovered after payment has been made. NO SUBSTITUTIONS PERMITTED WITHOUT WRITTEN APPROVAL OF THE ENTITY.

**3.8 ACCEPTANCE:** All equipment ordered will be subject to acceptance inspection and performance testing upon receipt. Acceptance inspection and performance testing will not take more than five (5) working days, weather permitting. Respondent will be notified within this time frame of any units not

delivered in full compliance with the purchase order specifications. In the event the goods tested fail to meet or exceed all conditions and requirements of the solicitation and Contract, the goods will be rejected in whole or in part, at the State's Entity's option, and returned to the Vendor or held for disposition at the Vendor's expense. Latent defects may result in cancellation of the Contract at no expense to the Entity.

## 3.9 RECORD KEEPING

3.9.1 Respondents shall provide, enter, or upload all documentation, communications, and records including all permits, certifications, warranties, and approvals regarding all provided services/ products as instructed by the Entity.

3.9.2 Respondents shall maintain records of all events that affect, or may be expected to affect the quality, scope, or progress of the services. All records shall be retained for a period of **five (5) years** following the closeout of the Entity's federal grant.

3.9.3 **Insurance**

3.9.3.1 If applicable, an original, certified copy of an Insurance Certificate listing the Entity as additional insured, must be submitted with the Respondent's submittal **(see Attachment E for requirements).** The successful Respondent will be required to maintain at all times during performance of the Contract, the insurance detailed below.

3.9.3.2 Workers' Compensation Insurance

3.9.3.3 Employers' Liability Insurance

3.9.3.4 Comprehensive General Liability Insurance

3.9.3.5 Excess Liability Insurance, Comprehensive General Liability Insurance, Comprehensive Automobile Liability Insurance

## 3.10 TERMS AND CONDITIONS

3.10.1 **Indemnity Clause** – The Respondent agrees to indemnify and save harmless the Entity and its officers, agents, and employees from any and all claims, causes or action, and damages of every kind, for injury to or death of any person and damages, to property arising out of or in connection with the work done by Respondent under this contract, and including acts or omissions of the Entity or its officers, agents, or employees in connection with said contract.

3.10.2 **Equal Opportunity Employer** – The successful Respondent shall warrant and agree that he/she is an Equal Opportunity Employer. Should complaints of any form of discrimination, either in dispensation of the service, or within company hiring policies be substantiated, this contract may be terminated immediately.

3.10.3 **Assignment** – The successful Respondent may not assign, sell, or otherwise transfer this contract without prior written consent of the Entity.

3.10.4 **Compliance with Laws** – The Respondent agrees to comply with the requirements of Section 603 of the Act, regulations adopted by Treasury pursuant to Section 603(f) of the Act, and guidance issued by Treasury regarding the foregoing.

3.10.4.1 Additionally, all applicable local government codes for the State of Texas also apply to this contract. All equipment, supplies and work furnished under this contract shall comply with applicable laws, ordinances, and regulations. Respondent shall obtain and pay for such

permits and inspections as are required for the legal performance of this work, unless otherwise specified. Respondent shall comply with all federal and state laws and Entity's ordinances and codes applicable to the Respondent's operation under this contract. These specifications and the contract resulting here shall be fully governed by the laws of the State of Texas and shall be fully performable in Galveston County, Texas, where venue for any proceeding arising hereunder will lie.

3.10.5 **Silence of Specifications** – The apparent silence of specifications as to any detail, or the apparent omission from it or a detailed description concerning any point, shall be regarded as meaning that only the best commercial practice is to prevail and that only material and workmanship of the finest quality shall be used. All interpretations of specifications shall be made on the basis of this statement. The Respondent should request clarification from the Entity as specified in this document.

## SECTION 4 – EVALUATION CRITERIA

**4.1 RESPONSIVENESS OF QUALIFICATIONS SUBMISSION: Pass/Fail**

Qualifications submission shall be responsive to all material requirements that shall enable the evaluation committee to evaluate responses in accordance with the evaluation criteria to make a recommendation to Officials of the Entity.

**4.2 FINANCIAL STABILITY OF RESPONDENT: Pass/Fail**

Financial stability of the Respondent to successfully undertake the project and the ability to ensure performance over the duration of the contract.

**4.3 TECHNICAL REQUIREMENTS: 100 Points Total**

Extent to which the provided service or products meets the needs of the Entity, including, but not limited to, the criteria in the evaluation matrix and in the submission requirements section and as expressed in this document.

**4.4 EVALUATION CRITERIA:**

**Solicitation responses shall be evaluated in accordance with Part 200 of the Uniform Administrative Requirements, Cost Principles, and Audit Requirements. The Entity will make the selection on the basis of demonstrated competence and qualifications; and to a Respondent that provides a fair and reasonable price.**

The Entity evaluates the responses, prepares a Bid Tabulation sheet, determines the award on the basis of fair and reasonable pricing considered to be the Best Value to the Entity.

Only responses submitted in compliance with the **Schedule of Events + Response Requirements** section and meeting qualifications will be considered. Failure to submit the required information may be cause for rejection of the bid response. The Entity reserves the right to waive informalities and minor irregularities in bids received.

**Initial Compliance Screening**
The Entity will perform an initial screening of all solicitation responses received. Unsigned solicitation responses, and solicitation responses that do not meet the minimum qualifications above and/or do not include all required forms and information may be subject to rejection without further evaluation.

**Additional Evaluation Criteria**
All solicitations will be evaluated based on Responsiveness and Price. Responsiveness means adhering to the Terms and Conditions and specifications of the supplies requested. See additional evaluation criteria under Exhibit A.

***Evaluation Process:*** *The Entity's Evaluator(s) completes an evaluation of the submitted proposal using the criteria described below.* ***The proposal submitted must be a firm-fixed price.***

**EVALUATION CRITERIA**

| EVALUATION CRITERIA | SCORE |
|---|---|
| Responsiveness of Proposal | Pass/Fail |
| Financial Stability | Pass/Fail |
| Understanding of Work; Experience and Qualifications | 20 |
| Capacity to Perform, Delivery/Service Schedule, and References | 20 |
| Pricing | 60 |
| **TOTAL SCORE** | **100** |

## SECTION 5 – RESPONSE SUBMISSION REQUIREMENTS

This section details the requirements for submitting all required information. Respondents are advised to see **Schedule of Events + Response Requirements** on Page 4 of this document, and to carefully review all the requirements and submit all documents and information as indicated in this RFP. Additional information may be requested for clarification. Incomplete responses may lead to a submission being deemed nonresponsive and will not be considered.

To ensure some degree of uniformity in the submission, please follow the outline listed below.

### 5.1 STATEMENT OF INTEREST

The statement of interest should be limited to a maximum of two (2) pages and must include a brief introduction of the company, a statement of the Respondent's understanding of the work to be performed and that the company meets and will comply with the requirements set forth in this document.

### 5.2 EXPERIENCE AND RELEVANT QUALIFICATIONS

Respondent shall demonstrate related professional qualifications, experience, and knowledge similar to this scope of work. Response should include information similar in scope and size to the scope of work in this RFP. Limit to four (4) pages. Minimum submission shall address the following:

5.2.1 **Experience** – Respondents shall provide a concise narrative description of their firm's experience in services similar in size and scope to the requested scope of services. Describe any work performed in or for the Entity. Respondents shall provide descriptions of at least three (3) projects of similar size and scope to this Program. Projects should include project location, duration and project description and scope of work the Respondent performed.

5.2.2 **Relevant Qualifications** – Respondents must provide a brief summary to include total number and types of employees, skills, knowledge and abilities, company background history, and number of years in providing similar services as outlined in this document.

### 5.3 CAPACITY TO PERFORM

Respondent should state its firm commitment to provide goods or services within the prescribed delivery date and time.

5.3.1 **Work Capacity:** Respondent shall provide information to demonstrate capacity to perform requested work. Respondents shall provide a detailed typical schedule to show sequence of key work activities and the number of days to complete each task.

5.3.4 If applicable, **Bonding Capacity:** Respondent(s) shall provide proof of bonding capacity in a statement addressed to the Entity from a certified bonding company authorized to do business in the State of Texas. The letter must clearly state the amount of Firm's bonding capacity to be reserved for the Entity's projects. Firm shall carry a minimum bonding capacity of the project value upon execution of the Contract. The bond(s) must be made payable to the Entity. In your response, please provide a statement regarding your ability to provide proof of bonding as directed in the Exhibits that follow.

**5.4 FINANCIAL STABILITY**

Respondent shall provide a statement that includes the following:

5.4.1 A full disclosure of any events, liabilities, or contingent liabilities that could affect Respondent's financial ability to perform this contract; and

5.4.2 Other financial information sufficient for the Entity, in its sole judgement, to determine if Respondent is financially solvent or adequately capitalized.

**5.5 LEGAL ACTIONS**

Provide a list of all pending litigation and include a brief description of the reason for legal action (if applicable).

**5.6 PRICING**

5.6.1 Respondents shall complete and submit the Pricing Sheet (see **Attachment B**).

5.6.2 Prices for all goods and/or services shall be all inclusive. Pricing offered shall be valid for ninety (90) days from response due date.

5.6.3 The City of La Marque is exempt from taxes. DO NOT INCLUDE TAX IN YOUR PRICING SUBMITTAL.

5.6.4 Estimated Quantities – Quantities indicated are estimated based upon the best available information. The Entity reserves the right to increase or decrease the quantities by any amount deemed necessary to meet its needs without any adjustments in the bid price.

See additional pricing criteria under Exhibit A, Options

# LIST OF EXHIBITS

EXHIBIT A PROJECT SCOPE OF WORK

EXHIBIT B REQUIRED CONTRACT PROVISIONS

EXHIBIT C OTHER RELEVANT INFORMATION/SPECIAL CONDITIONS

# EXHIBIT A – PROJECT SCOPE OF WORK

To be provided by the Entity

| Item | Description | | Quantity | Unit of Measure |
|---|---|---|---|---|
| 1 | Trailer Mounted Pothole Patcher with DuraPatcher Technology | | 1 | See Below |
| 2 | | | | |
| 3 | | | | |
| 4 | | | | |
| 5 | **DELIVERY LOCATION: Provide the Delivery Location** | 1500 Municipal Drive, La Marque, Texas 77568 | | |
| 6 | **DELIVERY SCHEDULE: Provide the number of calendar days required for delivery after receipt of the order** | 90 days | | |

**Basic Specifications for a Spray Injection Patching Truck:**

**Purpose:**
These specifications shall be construed as the minimum acceptable standards for a trailer mounted pothole patcher using a tow vehicle with aggregate supply. Should the manufacturer's current published data or specifications exceed these standards, the manufacturer's standards shall be considered minimum and shall be furnished. All integral parts not specifically mentioned in the scope of these specifications that are necessary to provide a complete working unit shall be furnished. Additionally, the machine for bid offered shall include all standard manufacturer's equipment. The one-man pothole patcher must be a new current production model and shall meet all EPA applicable standards at the time of manufacture.

The use of specific names and numbers in the specification is not intended to restrict the bidder or any seller or manufacturer, but is intended solely for the purpose of indicating the type, size and quality of equipment considered best adapted to the uses of city participating in this bid.

**Bidder Price:**
The bid price shall include all destination charges, delivery charges, title fees, rebates, and all other applicable costs and refunds.

**MANUALS**
Each unit will be provided with one (1) copy of the operator's manuals, one (1) copy of the current parts manuals and (1) copy of the repair manual. Units will not be accepted for delivery until the manuals as outlined above are received by the purchaser.

**Warranty:**
Units purchased under this specification shall be warranted against defects in materials and workmanship for a period of not less than one year from date of delivery to customer. Items thought to be defective will be returned to factory prepaid to be repaired or replaced. The manufacturer shall warranty the equipment for a period of one year. Engine must be covered for Major Components for a period of 2 years or 2000 hours. Bidder warranty policy must be included with bid submittal

**Basic Minimum Requirements:**
The trailer-mounted machine shall be designed and constructed to repair larger cracks, potholes, and broad areas. The machine shall be capable of blowing water, dust or debris from the pothole or surface to be repaired. The machine must be capable of patching while moving forward or reverse, must be capable of patching at temperatures as low as 5 degrees F. The machine must be capable of performing each of the following functions:

| | Yes | No |
|---|---|---|
| Clean cracks and surfaces | | |
| Spray liquid asphalt emulsion over area to provide a tack coat | | |
| Apply emulsion-coated aggregate to provide high-density patch | | |
| Cover repaired area with dry aggregate | | |
| Overnight electric heating for maintaining emulsion temperature | | |

| **Dimensions:** | Yes | No |
|---|---|---|
| Width and height to meet State and Federal requirements without requiring oversize permits. | | |
| Air is used to feed and propel aggregate and emulsion to the nozzle at up to 135 lbs. per minute. No moving parts are involved in the spray injection process. | | |
| Aggregate feed system can pass up to 2-1/2 inch rock and is regulated by engine rpm providing infinite adjustment for job-site conditions. | | |
| Boom system is ergonomically designed for easy, natural movement without fatigue. | | |
| Self-cleaning Vent-Flo nozzle can patch close to traffic without overspray. | | |

| **Specifications:** | Yes | No |
|---|---|---|
| 135 lbs./min, 1⁄4-1/2-inch wet or dry aggregate | | |

| **Blower:** | Yes | No |
|---|---|---|
| Integrated 6 yd. rectangular in shape with 9ft x 7ft. opening | | |
| Direct driven from engine flywheel | | |
| 10 psi relief valve | | |

| **Compressor:** | Yes | No |
|---|---|---|
| 15 cfm direct driven | | |
| Governed from 70-95 psi | | |

| **Tanks:** | Yes | No |
|---|---|---|
| Emulsion - 250 gallons, 200 psi working pressure R-15 insulation | | |
| Two 1500-watt heat blankets with thermostats | | |
| Clean-Out - 15-gallon, 200 psi working pressure | | |
| Engine Fuel - 18 gallons | | |

| **Swing Hose Carrier:** | Yes | No |
|---|---|---|
| Trifold No Fatigue Design. | | |

| **Operator Controls:** | Yes | No |
|---|---|---|
| Emulsion and rock flow, engine rpm, horn. | | |

| **Frame:** | Yes | No |
|---|---|---|
| Emulsion and rock flow, engine rpm, horn. | | |

| **Miscellaneous:** | Yes | No |
|---|---|---|
| Dual axle, leaf spring (12,000 lb.). | | |
| (4) 225/75R15 Load “D” tires. | | |
| Electric brakes. | | |
| Tail, brake, directional, strobe and arrow-board lights. | | |
| 96” wide x 194” long x 91” high. | | |
| Weight – 5,380 lbs dry. | | |

| **Safety Decals:** | Yes | No |
|---|---|---|
| Unit shall be equipped with required safety decals and signage | | |

| **Aggregate Delivery Hose:** | **Yes** | **No** |
|---|---|---|
| 2" inside diameter, rubber-lined, abrasion resistant, non-kinking hose outfitted with spiral wire reinforcement. To minimize wear points, at no point will there be bends in the delivery hose with a radius of less than 18". | | |

**Options:**
**Bid must include the cost for each of the following options, itemized separately on the bid**

| | **Yes** | **No** |
|---|---|---|
| Crack Sealing Wand and associated hardware installed and ready to use. | | |

**This project is being supported, in whole or in part, by the U.S. Department of the Treasury, in utilizing the U.S. Department of the Treasury Coronavirus State and Local Fiscal Recovery Funds (ARPA) program and is subject to all applicable Federal and State laws and regulations.**

# EXHIBIT B – ARPA REQUIRED PROVISIONS

CFR 200.327 Contract provisions. The Non-Federal entity's contracts should contain applicable provisions described in Appendix II to Part 200—Contract Provisions for Non-Federal Entity Contracts Under Federal Awards. The Non-Federal entity's contracts must contain the provisions described in Appendix II to Part 200—Contract Provisions for Non-Federal Entity Contracts Under Federal Awards, as applicable.

| THRESHOLD | PROVISION | CITATION | PROVISION APPLIES TO |
|---|---|---|---|
| | **2 CFR 200 Appendix II (A-L)** | | |
| >$250,000 (Simplified Acquisition Threshold) | Contracts for more than the simplified acquisition threshold, which is the inflation adjusted amount determined by the Civilian Agency Acquisition Council and the Defense Acquisition Regulations Council (Councils) as authorized by 41 U.S.C. 1908, must address administrative, contractual, or legal remedies in instances where contractors violate or breach contract terms, and provide for such sanctions and penalties as appropriate. | 2 CFR 200<br>APPENDIX II (A) | Contractor RFP/IFB<br>Contractor RFQ<br>Subrecipients |
| >$10,000 | All contracts in excess of $10,000 must address termination for cause and for convenience by the Non-Federal entity including the manner by which it will be affected and the basis for settlement. | 2 CFR 200<br>APPENDIX II (B) | Contractor RFP/IFB<br>Contractor RFQ<br>Subrecipients |
| None | Equal Employment Opportunity. Except as otherwise provided under 41 CFR Part 60, all contracts that meet the definition of "federally assisted construction contract" in 41 CFR Part 60-1.3 must include the equal opportunity clause provided under 41 CFR 60-1.4(b), in accordance with Executive Order 11246, "Equal Employment Opportunity" (30 FR 12319, 12935, 3 CFR Part, 1964-1965 Comp., p. 339), as amended by Executive Order 11375, "Amending Executive Order 11246 Relating to Equal Employment Opportunity," and implementing regulations at 41 CFR part 60, "Office of Federal Contract Compliance Programs, Equal Employment Opportunity, Department of Labor."<br>41 CFR 60-1.4 Equal opportunity clause.<br>(b) Federally assisted construction contracts. (1) Except as otherwise provided, each administering agency shall require the inclusion of the following language as a condition of any grant, contract, loan, insurance, or guarantee involving federally assisted construction which is not exempt from the requirements of the equal opportunity clause:<br>The [recipient] hereby agrees that it will incorporate or cause to be incorporated into any contract for construction work, or modification thereof, as defined in the regulations of the Secretary of Labor at 41 CFR Chapter 60, which is paid for in whole or in part with funds obtained from the Federal Government or borrowed on the credit of the Federal Government pursuant to a grant, contract, loan, insurance, or guarantee, or undertaken pursuant to any Federal program involving such grant, contract, loan, insurance, or guarantee, the following equal opportunity clause:<br>During the performance of this contract, the contractor agrees as follows:<br>(1) The contractor will not discriminate against any employee or applicant for employment because of race, color, religion, sex, sexual orientation, gender identity, or national origin. The contractor will take affirmative action to ensure that applicants are employed, and that employees are treated during employment without regard to their race, color, religion, sex, sexual orientation, gender identity, or national origin. Such action shall include, but not be limited to the following:<br>Employment, upgrading, demotion, or transfer; recruitment or recruitment advertising; layoff or termination; rates of pay or other forms of compensation; and selection for training, including apprenticeship. The contractor agrees to post in | 2 CFR 200<br>APPENDIX II (C)<br>and<br>41 CFR §60-1.4(b) | Contractor RFP/IFB<br>Contractor RFQ<br>Subrecipients |

| THRESHOLD | PROVISION | CITATION | PROVISION APPLIES TO |
|---|---|---|---|
| | conspicuous places, available to employees and applicants for employment, notices to be provided setting forth the provisions of this nondiscrimination clause.<br>(2) The contractor will, in all solicitations or advertisements for employees placed by or on behalf of the contractor, state that all qualified applicants will receive consideration for employment without regard to race, color, religion, sex, sexual orientation, gender identity, or national origin.<br>(3) The contractor will not discharge or in any other manner discriminate against any employee or applicant for employment because such employee or applicant has inquired about, discussed, or disclosed the compensation of the employee or applicant or another employee or applicant. This provision shall not apply to instances in which an employee who has access to the compensation information of other employees or applicants as a part of such employee's essential job functions discloses the compensation of such other employees or applicants to individuals who do not otherwise have access to such information, unless such disclosure is in response to a formal complaint or charge, in furtherance of an investigation, proceeding, hearing, or action, including an investigation conducted by the employer, or is consistent with the contractor's legal duty to furnish information.<br>(4) The contractor will send to each labor union or representative of workers with which he has a collective bargaining agreement or other contract or understanding, a notice to be provided advising the said labor union or workers' representatives of the contractor's commitments under this section and shall post copies of the notice in conspicuous places available to employees and applicants for employment.<br>(5) The contractor will comply with all provisions of Executive Order 11246 of September 24, 1965, and of the rules, regulations, and relevant orders of the Secretary of Labor.<br>(6) The contractor will furnish all information and reports required by Executive Order 11246 of September 24, 1965, and by rules, regulations, and orders of the Secretary of Labor, or pursuant thereto, and will permit access to his books, records, and accounts by the administering agency and the Secretary of Labor for purposes of investigation to ascertain compliance with such rules, regulations, and orders.<br>(7) In the event of the contractor's noncompliance with the nondiscrimination clauses of this contract or with any of the said rules, regulations, or orders, this contract may be canceled, terminated, or suspended in whole or in part and the contractor may be declared ineligible for further Government contracts or federally assisted construction contracts in accordance with procedures authorized in Executive Order 11246 of September 24, 1965, and such other sanctions may be imposed and remedies invoked as provided in Executive Order 11246 of September 24, 1965, or by rule, regulation, or order of the Secretary of Labor, or as otherwise provided by law.<br>(8) The contractor will include the portion of the sentence immediately preceding paragraph (1) and the provisions of paragraphs (1) through (8) in every subcontract or purchase order unless exempted by rules, regulations, or orders of the Secretary of Labor issued pursuant to section 204 of Executive Order 11246 of September 24, 1965, so that such provisions will be binding upon each subcontractor or vendor. The contractor will take such action with respect to any subcontract or purchase order as the administering agency may direct as a means of enforcing such provisions, including sanctions for noncompliance:<br>Provided, however, that in the event a contractor becomes involved in, or is threatened with, litigation with a subcontractor or vendor as a result of such direction by the administering agency, the contractor may request the United States to enter into such litigation to protect the interests of the United States.<br>The [recipient] further agrees that it will be bound by the above equal opportunity clause with respect to its own employment practices when it participates in federally assisted construction work: Provided, that if the [recipient] so participating is a State or local government, the above equal opportunity clause is not applicable to any agency, instrumentality or subdivision of such government which does not participate in work on or under the contract. | | |

| THRESHOLD | PROVISION | CITATION | PROVISION APPLIES TO |
|---|---|---|---|
| | The [recipient] agrees that it will assist and cooperate actively with the administering agency and the Secretary of Labor in obtaining the compliance of contractors and subcontractors with the equal opportunity clause and the rules, regulations, and relevant orders of the Secretary of Labor, that it will furnish the administering agency and the Secretary of Labor such information as they may require for the supervision of such compliance, and that it will otherwise assist the recipient agency in the discharge of the agency's primary responsibility for securing compliance.<br><br>The recipient further agrees that it will refrain from entering into any contract or contract modification subject to Executive Order 11246 of September 24, 1965, with a contractor debarred from, or who has not demonstrated eligibility for, Government contracts and federally assisted construction contracts pursuant to the Executive Order and will carry out such sanctions and penalties for violation of the equal opportunity clause as may be imposed upon contractors and subcontractors by the administering agency or the Secretary of Labor pursuant to Part II, Subpart D of the Executive Order. In addition, the [recipient] agrees that if it fails or refuses to comply with these undertakings, the administering agency may take any or all of the following actions: cancel, terminate, or suspend in whole or in part this grant (contract, loan, insurance, guarantee); refrain from extending any further assistance to the [recipient] under the program with respect to which the failure or refund occurred until satisfactory assurance of future compliance has been received from such [recipient]; and refer the case to the Department of Justice for appropriate legal proceedings. | | |
| >$10,000,000 for ARPA but State Provision Applies at any amount and/or<br><br>>$2,000 for CDBG/Braided Funds Projects<br><br>See TX Prevailing Wage Laws | Davis-Bacon Act, as amended (40 U.S.C. 3141-3148). When required by Federal program legislation, all prime construction contracts in excess of $10,000,00 awarded by Non-Federal entities must include a provision for compliance with the Davis-Bacon Act (40 U.S.C. 3141-3144, and 3146-3148) as supplemented by Department of Labor regulations (29 CFR Part 5, "Labor Standards Provisions Applicable to Contracts Covering Federally Financed and Assisted Construction"). In accordance with the statute, contractors must be required to pay wages to laborers and mechanics at a rate not less than the prevailing wages specified in a wage determination made by the Secretary of Labor. In addition, contractors must be required to pay wages not less than once a week. The Non-Federal entity must place a copy of the current prevailing wage determination issued by the Department of Labor in each solicitation. The decision to award a contract or subcontract must be conditioned upon the acceptance of the wage determination. The Non-Federal entity must report all suspected or reported violations to the Federal awarding agency.<br><br>The contracts must also include a provision for compliance with the Copeland "Anti-Kickback" Act (40 U.S.C. 3145), as supplemented by Department of Labor regulations (29 CFR Part 3, "Contractors and Subcontractors on Public Building or Public Work Financed in Whole or in Part by Loans or Grants from the United States"). The Act provides that each contractor or subrecipient must be prohibited from inducing, by any means, any person employed in the construction, completion, or repair of public work, to give up any part of the compensation to which he or she is otherwise entitled. The Non-Federal entity must report all suspected or reported violations to the Federal awarding agency. | 2 CFR 200 APPENDIX II (D) | Contractor RFP/IFB<br><br>Subrecipients |
| >$100,000 | Contract Work Hours and Safety Standards Act (40 U.S.C. 3701-3708). Where applicable, all contracts awarded by the Non-Federal entity in excess of $100,000 that involve the employment of mechanics or laborers must include a provision for compliance with 40 U.S.C. 3702 and 3704, as supplemented by Department of Labor regulations (29 CFR Part 5). Under 40 U.S.C. 3702 of the Act, each contractor must be required to compute the wages of every mechanic and laborer on the basis of a standard work week of 40 hours. Work in excess of the standard work week is permissible provided that the worker is compensated at a rate of not less than one and a half times the basic rate of pay for all hours worked in excess of 40 hours in the work week. The requirements of 40 U.S.C. 3704 are applicable to construction work and provide that no laborer or mechanic must be required to work in surroundings | 2 CFR 200 APPENDIX II (E) | Contractor RFP/IFB<br><br>Subrecipients |

| THRESHOLD | PROVISION | CITATION | PROVISION APPLIES TO |
|---|---|---|---|
| | or under working conditions which are unsanitary, hazardous, or dangerous. These requirements do not apply to the purchases of supplies or materials or articles ordinarily available on the open market, or contracts for transportation or transmission of intelligence. | | |
| None | Rights to Inventions Made Under a Contract or Agreement. If the Federal award meets the definition of "funding agreement" under 37 CFR § 401.2 (a) and the recipient or subrecipient wishes to enter into a contract with a small business firm or nonprofit organization regarding the substitution of parties, assignment or performance of experimental, developmental, or research work under that "funding agreement," the recipient or subrecipient must comply with the requirements of 37 CFR Part 401, "Rights to Inventions Made by Nonprofit Organizations and Small Business Firms Under Government Grants, Contracts and Cooperative Agreements," and any implementing regulations issued by the awarding agency. | 2 CFR 200 APPENDIX II (F) | Contractor RFP/IFB<br>Contractor RFQ<br>Subrecipients |
| >$150,000 | Clean Air Act (42 U.S.C. 7401-7671q.) and the Federal Water Pollution Control Act (33 U.S.C. 1251-1387), as amended – Contracts and subgrants of amounts in excess of $150,000 must contain a provision that requires the Non-Federal award to agree to comply with all applicable standards, orders or regulations issued pursuant to the Clean Air Act (42 U.S.C. 7401-7671q) and the Federal Water Pollution Control Act as amended (33 U.S.C. 1251-1387). Violations must be reported to the Federal awarding agency and the Regional Office of the Environmental Protection Agency (EPA). | 2 CFR 200 APPENDIX II (G) | Contractor RFP/IFB<br>Contractor RFQ<br>Subrecipients |
| >$25,000 | Debarment and Suspension (Executive Orders 12549 and 12689) – A contract award (see 2 CFR 180.220) must not be made to parties listed on the governmentwide exclusions in the System for Award Management (SAM), in accordance with the OMB guidelines at 2 CFR 180 that implement Executive Orders 12549 (3 CFR part 1986 Comp., p. 189) and 12689 (3 CFR part 1989 Comp., p. 235), "Debarment and Suspension." SAM Exclusions contains the names of parties debarred, suspended, or otherwise excluded by agencies, as well as parties declared ineligible under statutory or regulatory authority other than Executive Order 12549. | 2 CFR 200 APPENDIX II (H) | Contractor RFP/IFB<br>Contractor RFQ<br>Subrecipients<br>Vendors |
| >$100,000 | Byrd Anti-Lobbying Amendment (31 U.S.C. 1352) – Contractors that apply or bid for an award exceeding $100,000 must file the required certification. Each tier certifies to the tier above that it will not and has not used Federal appropriated funds to pay any person or organization for influencing or attempting to influence an officer or employee of any agency, a member of Congress, officer or employee of Congress, or an employee of a member of Congress in connection with obtaining any Federal contract, grant or any other award covered by 31 U.S.C. 1352. Each tier must also disclose any lobbying with Non-Federal funds that takes place in connection with obtaining any Federal award. Such disclosures are forwarded from tier to tier up to the Non-Federal award. | 2 CFR 200 APPENDIX II (I) and 24 CFR §570.303 | Contractor RFP/IFB<br>Contractor RFQ<br>Subrecipients |

| THRESHOLD | PROVISION | CITATION | PROVISION APPLIES TO |
|---|---|---|---|
| | See 2 CFR §200.323 - Procurement of Recovered Materials.<br><br>Where applicable, in the performance of contract, pursuant to 2 CFR 200.323, the contractor must comply with section 6002 of the Solid Waste Disposal Act, as amended by the Resource Conservation and Recovery Act. The requirements of Section 6002 include procuring only items designated in guidelines of the Environmental Protection Agency (EPA) at 40 CFR part 247 that contain the highest percentage of recovered materials practicable, consistent with maintaining a satisfactory level of competition, where the purchase price of the item exceeds $10,000 or the value of the quantity acquired during the preceding fiscal year exceeded $10,000; procuring solid waste management services in a manner that maximizes energy and resource recovery; and establishing an affirmative procurement program for procurement of recovered materials identified in the EPA guidelines.<br><br>To the extent that the scope of work or specifications in the contract requires the contractor to provide recovered materials the scope of work or specifications are modified to require that as follows.<br><br>i. In the performance of this contract, the Contractor shall make maximum use of products containing recovered materials that are EPA-designated items unless the product cannot be acquired—<br>1. Competitively within a timeframe providing for compliance with the contract performance schedule;<br>2. Meeting contract performance requirements; or<br>3. At a reasonable price.<br>ii. Information about this requirement, along with the list of EPA-designated items, is available at EPA's Comprehensive Procurement Guidelines web site, https://www.epa.gov/smm/comprehensive-procurement-guideline-cpg-program.<br>iii. The Contractor also agrees to comply with all other applicable requirements of Section 6002 of the "Solid Waste Disposal Act." | 2 CFR 200<br>APPENDIX II (J) | Contractor RFP/IFB<br>Contractor RFQ<br>Subrecipients |
| | See 2 CFR §200.216 - Prohibition on certain telecommunications and video surveillance services or equipment<br><br>(a) Recipients and subrecipients are prohibited from obligating or expending loan or grant funds to:<br>(1) Procure or obtain;<br>(2) Extend or renew a contract to procure or obtain; or<br>(3) Enter into a contract (or extend or renew a contract) to procure or obtain equipment, services, or systems that uses covered telecommunications equipment or services as a substantial or essential component of any system, or as critical technology as part of any system. As described in Public Law 115-232, section 889, covered telecommunications equipment is telecommunications equipment produced by Huawei Technologies Company or ZTE Corporation (or any subsidiary or affiliate of such entities).<br>(i) For the purpose of public safety, security of government facilities, physical security surveillance of critical infrastructure, and other national security purposes, video surveillance and telecommunications equipment produced by Hytera Communications Corporation, Hangzhou Hikvision Digital Technology Company, or Dahua Technology Company (or any subsidiary or affiliate of such entities).<br>(ii) Telecommunications or video surveillance services provided by such entities or using such equipment.<br>(iii) Telecommunications or video surveillance equipment or services produced or provided by an entity that the Secretary of Defense, in consultation with the Director of the National Intelligence or the Director of the Federal Bureau of Investigation, reasonably believes to be an entity | 2 CFR 200<br>APPENDIX II (K) | Contractor RFP/IFB<br>Contractor RFQ<br>Subrecipients |

| THRESHOLD | PROVISION | CITATION | PROVISION APPLIES TO |
|---|---|---|---|
| | owned or controlled by, or otherwise connected to, the government of a covered foreign country.<br>(b) In implementing the prohibition under Public Law 115-232, section 889, subsection (f), paragraph (1), heads of executive agencies administering loan, grant, or subsidy programs shall prioritize available funding and technical support to assist affected businesses, institutions and organizations as is reasonably necessary for those affected entities to transition from covered communications equipment and services, to procure replacement equipment and services, and to ensure that communications service to users and customers is sustained.<br>(c) See Public Law 115-232, section 889 for additional information.<br>(d) See also § 200.471. | | |
| | See 2 CFR §200.322 - Domestic Preferences for Procurements.<br><br>(a) As appropriate and to the extent consistent with law, the Non-Federal entity should, to the greatest extent practicable under a Federal award, provide a preference for the purchase, acquisition, or use of goods, products, or materials produced in the United States (including but not limited to iron, aluminum, steel, cement, and other manufactured products). The requirements of this section must be included in all subawards including all contracts and purchase orders for work or products under this award.<br><br>(b) For purposes of this section:<br>(1) "Produced in the United States" means, for iron and steel products, that all manufacturing processes, from the initial melting stage through the application of coatings, occurred in the United States.<br>(2) "Manufactured products" means items and construction materials composed in whole or in part of non-ferrous metals such as aluminum; plastics and polymer-based products such as polyvinyl chloride pipe; aggregates such as concrete; glass, including optical fiber; and lumber. | 2 CFR 200 APPENDIX II (L) | Contractor RFP/IFB<br>Contractor RFQ<br>Subrecipients |
| | **Additional 2 CFR 200 references & Other Regulations** | | |
| None | The Federal awarding agency must establish conflict of interest policies for Federal awards. The Non-Federal entity must disclose in writing any potential conflict of interest to the Federal awarding agency or pass-through entity in accordance with applicable Federal awarding agency policy. | 2 CFR 200.112 | Contractor RFP/IFB<br>Contractor RFQ<br>Subrecipients |
| None | Contracting with HUB, small and minority businesses, women's business enterprises, and labor surplus area firms.<br>(a) The Non-Federal entity must take all necessary affirmative steps to assure that minority businesses, women's business enterprises, and labor surplus area firms are used when possible.<br>(b) Affirmative steps must include:<br>(1) Placing qualified small and minority businesses and women's business enterprises on solicitation lists;<br>(2) Assuring that small and minority businesses, and women's business enterprises are solicited whenever they are potential sources;<br>(3) Dividing total requirements, when economically feasible, into smaller tasks or quantities to permit maximum participation by small and minority businesses, and women's business enterprises;<br>(4) Establishing delivery schedules, where the requirement permits, which encourage participation by small and minority businesses, and women's | 2 CFR 200.321 | Contractor RFP/IFB<br>Contractor RFQ<br>Subrecipients |

| THRESHOLD | PROVISION | CITATION | PROVISION APPLIES TO |
|---|---|---|---|
| | business enterprises;<br>(5) Using the services and assistance, as appropriate, of such organizations as the Small Business Administration and the Minority Business Development Agency of the Department of Commerce; and<br>(6) Requiring the prime contractor, if subcontracts are to be let, to take the affirmative steps listed in paragraphs (b)(1) through (5) of this section. | | |
| >$10,000 | An NFE (Non-Federal Entity) that is a state agency or an agency of a political subdivision of a state, and the NFE's contractors must comply with Section 6002 of the Solid Waste Disposal Act.<br>Applicable NFEs must include a contract provision requiring compliance with this requirement.<br>This includes contracts awarded by a state agency or political subdivision of a state and its contractors for certain items, as designated by the EPA, with a purchase price greater than $10,000.<br>Indian Tribal Governments and nonprofit organizations are not required to comply with this provision. Additional requirements are listed below. | 2 CFR 200.323 | Contractor RFP/IFB<br>Contractor RFQ<br>Subrecipients |
| None | Financial records, supporting documents, statistical records, and all other Non-Federal entity records pertinent to a Federal award must be retained for a period of three years from the date of submission of the final expenditure report or, for Federal awards that are renewed quarterly or annually, from the date of the submission of the quarterly or annual financial report, respectively, as reported to the Federal awarding agency or pass-through entity in the case of a subrecipient. Federal awarding agencies and pass-through entities must not impose any other record retention requirements upon Non-Federal entities. **All records related to ARPA shall be maintained for 5 years per the ARPA terms, conditions, and regulations.** The only exceptions are the following:<br>(a) If any litigation, claim, or audit is started before the expiration of the 3-year period, the records must be retained until all litigation, claims, or audit findings involving the records have been resolved and final action taken. **All records related to ARPA shall be maintained for 5 years per the ARPA terms, conditions, and regulations.**<br>(b) When the Non-Federal entity is notified in writing by the Federal awarding agency, cognizant agency for audit, oversight agency for audit, cognizant agency for indirect costs, or pass-through entity to extend the retention period.<br>(c) Records for real property and equipment acquired with Federal funds must be retained for 3 years after final disposition. All records related to ARPA shall be maintained for 5 years per the ARPA terms and conditions and regulations.<br>(d) When records are transferred to or maintained by the Federal awarding agency or pass-through entity, the 3-year retention requirement is not applicable to the Non-Federal entity All records related to ARPA shall be maintained for 5 years per the ARPA terms and conditions and regulations. **All records related to ARPA shall be maintained for 5 years per the ARPA terms, conditions, and regulations.**<br>(e) Records for program income transactions after the period of performance. In some cases, recipients must report program income after the period of performance. Where there is such a requirement, the retention period for the records pertaining to the earning of the program income starts from the end of the Non-Federal entity's fiscal year in which the program income is earned.<br>(f) Indirect cost rate proposals and cost allocations plans. This paragraph applies to the following types of documents and their supporting records: Indirect cost rate computations or proposals, cost allocation plans, and any similar accounting computations of the rate at which a particular group of costs is chargeable (such as computer usage chargeback rates or composite fringe benefit rates).<br>(1) *If submitted for negotiation.* If the proposal, plan, or other computation is | 2 CFR 200.334 | Contractor RFP/IFB<br>Contractor RFQ<br>Subrecipients<br>Vendors |

| THRESHOLD | PROVISION | CITATION | PROVISION APPLIES TO |
|---|---|---|---|
| | required to be submitted to the Federal Government (or to the pass-through entity) to form the basis for negotiation of the rate, then the 3-year retention period for its supporting records starts from the date of such submission. **All records related to ARPA shall be maintained for 5 years per the ARPA terms, conditions, and regulations.**<br><br>(2) *If not submitted for negotiation.* If the proposal, plan, or other computation is not required to be submitted to the Federal Government (or to the pass-through entity) for negotiation purposes, then the 3-year retention period for the proposal, plan, or computation and its supporting records starts from the end of the fiscal year (or other accounting period) covered by the proposal, plan, or other computation. **All records related to ARPA shall be maintained for 5 years per the ARPA terms, conditions, and regulations.** | | |
| None | The Federal awarding agency and the Non-Federal entity should, whenever practicable, collect, transmit, and store Federal award-related information in open and machine-readable formats rather than in closed formats or on paper in accordance with applicable legislative requirements. A machine-readable format is a format in a standard computer language (not English text) that can be read automatically by a web browser or computer system. The Federal awarding agency or pass-through entity must always provide or accept paper versions of Federal award-related information to and from the Non-Federal entity upon request. If paper copies are submitted, the Federal awarding agency or pass-through entity must not require more than an original and two copies. When original records are electronic and cannot be altered, there is no need to create and retain paper copies. When original records are paper, electronic versions may be substituted through the use of duplication or other forms of electronic media provided that they are subject to periodic quality control reviews, provide reasonable safeguards against alteration, and remain readable. | 2 CFR 200.336 | Contractor RFP/IFB<br>Contractor RFQ<br>Subrecipients |
| None | CONTRACTS WITH COMPANIES ENGAGED IN BUSINESS WITH IRAN, SUDAN, OR FOREIGN TERRORIST ORGANIZATION PROHIBITED. A governmental entity may not enter into a governmental contract with a company that is identified on a list prepared and maintained under Section 806.051, 807.051, or 2252.153. The term "foreign terrorist organization" in this paragraph has the meaning assigned to such a term in Section 2252.151(2) of the Texas Government Code. | Texas Government Code 2252.152 | Contractor RFP/IFB<br>Contractor RFQ<br>Subrecipients |
| >$100,000 | PROVISION REQUIRED IN CONTRACT.<br><br>(a) This section applies only to a contract that:<br>(1) is between a governmental entity and a company with 10 or more full-time employees; and<br>(2) has a value of $100,000 or more that is to be paid wholly or partly from public funds of the governmental entity.<br>(b) A governmental entity may not enter into a contract with a company for goods or services unless the contract contains a written verification from the company that it:<br>(1) does not boycott Israel; and<br><br>(2) will not boycott Israel during the term of the contract. | Texas Government Code 2271 | Contractor RFP/IFB<br>Contractor RFQ<br>Subrecipients<br>Vendors |
| For Critical Infrastructure Projects | PROHIBITION ON CONTRACTS WITH CERTAIN FOREIGN-OWNED COMPANIES IN CONNECTION WITH CRITICAL INFRASTRUCTURE.<br><br>PROHIBITED CONTRACTS.<br><br>(a) A governmental entity may not enter into a contract or other agreement relating to critical infrastructure in this state with a company:<br><br>(1) if, under the contract or other agreement, the company would be granted direct or remote access to or control of critical infrastructure in this state, excluding access specifically allowed by the governmental entity for product | Texas Government Code, Title 10, Subtitle F, Chapter 2274.0102 | Subrecipients<br>EC 6.1 Awardees |

| THRESHOLD | PROVISION | CITATION | PROVISION APPLIES TO |
|---|---|---|---|
| | warranty and support purposes; and<br>(2) if the governmental entity knows that the company is:<br>(A) owned by or the majority of stock or other ownership interest of the company is held or controlled by:<br>(i) individuals who are citizens of China, Iran, North Korea, Russia, or a designated country; or<br>(ii) a company or other entity, including a governmental entity, that is owned or controlled by citizens of or is directly controlled by the government of China, Iran, North Korea, Russia, or a designated country; or<br>(B) headquartered in China, Iran, North Korea, Russia, or a designated country.<br>(b) The prohibition described by Subsection (a) applies regardless of whether:<br>(1) the company's or its parent company's securities are publicly traded; or<br>(2) the company or its parent company is listed on a public stock exchange as:<br>(A) a Chinese, Iranian, North Korean, or Russian company; or<br>(B) a company of a designated country. | | |
| None | Mandatory standards and policies relating to energy efficiency which are contained in the state energy conservation plan issued in compliance with the Energy Policy and Conservation Act. | 42 U.S.C. 6201 | Contractor RFP/IFB<br>Subrecipients |
| None | The Firm agrees that no otherwise qualified individual with disabilities shall, solely by reason of his/her disability, be denied the benefits of, or be subjected to discrimination, including discrimination in employment, under any program or activity receiving federal financial assistance. | Section 504 of the Rehabilitation Act of 1973, as amended. | Subrecipients |
| | **ARPA Terms & Conditions** | | |
| ARPA Terms, Conditions, & Records | 1. Use of Funds.<br>a. Recipient understands and agrees that the funds disbursed under this award may only be used in compliance with section 603(c) of the Social Security Act (the Act), Treasury's regulations implementing that section, and guidance issued by Treasury regarding the foregoing.<br>b. Recipient will determine prior to engaging in any project using this assistance that it has the institutional, managerial, and financial capability to ensure proper planning, management, and completion of such project. | Section 9901 of the American Rescue Plan Act, Pub. L. No. 117-2;<br>Section 602(b), 603(b) and/or 603(c) as applicable | Subrecipients |
| ARPA Terms, Conditions, & Records | 2. Period of Performance. The period of performance for this award begins on the date hereof and ends on December 31, 2026. As set forth in Treasury's implementing regulations, Recipients may use award funds to cover eligible costs incurred during the period that begins on March 3, 2021, and ends on December 31, 2024. | Section 9901 of the American Rescue Plan Act, Pub. L. No. 117-2;<br>Section 602(b), 603(b) and/or 603(c) as applicable | Subrecipients |
| ARPA Terms, Conditions, & Records | 3. Reporting. Recipient agrees to comply with any reporting obligations established by Treasury as they relate to this award. | Section 9901 of the American Rescue Plan Act, Pub. L. No. 117-2;<br>Section 602(b), 603(b) and/or 603(c) as applicable | Subrecipients |

| THRESHOLD | PROVISION | CITATION | PROVISION APPLIES TO |
|---|---|---|---|
| ARPA Terms, Conditions, & Records | 4. Maintenance of and Access to Records<br>a. Recipient shall maintain records and financial documents sufficient to evidence compliance with section 603(c) of the Act, Treasury's regulations implementing that section, and guidance issued by Treasury regarding the foregoing.<br>b. The Treasury Office of Inspector General and the Government Accountability Office, or their authorized representatives, shall have the right of access to records (electronic and otherwise) of Recipient in order to conduct audits or other investigations.<br>c. Records shall be maintained by Recipient for a period of five (5) years after all funds have been expended or returned to Treasury, whichever is later. | Section 9901 of the American Rescue Plan Act, Pub. L. No. 117-2;<br>Section 602(b), 603(b) and/or 603(c) as applicable | Contractor RFP/IFB<br>Contractor RFQ<br>Subrecipients<br>Vendors |
| ARPA Terms, Conditions, & Records | 5. Pre-award Costs. Pre-award costs, as defined in 2 CFR § 200.458, may not be paid with funding from this award. | Section 9901 of the American Rescue Plan Act, Pub. L. No. 117-2;<br>Section 602(b), 603(b) and/or 603(c) as applicable | Subrecipients |
| ARPA Terms, Conditions, & Records | 6. Administrative Costs. Recipient may use funds provided under this award to cover both direct and indirect costs. | Section 9901 of the American Rescue Plan Act, Pub. L. No. 117-2;<br>Section 602(b), 603(b) and/or 603(c) as applicable | Subrecipients |
| ARPA Terms, Conditions, & Records | 7. Cost Sharing. Cost sharing or matching funds are not required to be provided by Recipient. | Section 9901 of the American Rescue Plan Act, Pub. L. No. 117-2;<br>Section 602(b), 603(b) and/or 603(c) as applicable | Subrecipients |
| ARPA Terms, Conditions, & Records | 8. Conflicts of Interest. Recipient understands and agrees it must maintain a conflict of interest policy consistent with 2 CFR § 200.318(c) and that such conflict of interest policy is applicable to each activity funded under this award. Recipient and subrecipients must disclose in writing to Treasury or the pass-through entity, as appropriate, any potential conflict of interest affecting the awarded funds in accordance with 2 CFR § 200.112. | Section 9901 of the American Rescue Plan Act, Pub. L. No. 117-2;<br>Section 602(b), 603(b) and/or 603(c) as applicable | Contractor RFP/IFB<br>Contractor RFQ<br>Subrecipients<br>Vendors |
| ARPA Terms, Conditions, & Records | 9. Compliance with Applicable Law and Regulations.<br>a. Recipient agrees to comply with the requirements of section 603 of the Act, regulations adopted by Treasury pursuant to section 603(f) of the Act, and guidance issued by Treasury regarding the foregoing. Recipient also agrees to comply with all other applicable federal statutes, regulations, and executive orders, and Recipient shall provide for such compliance by other parties in any agreements it enters into with other parties relating to this award.<br>b. Federal regulations applicable to this award include, without limitation, the following:<br>i. Uniform Administrative Requirements, Cost Principles, and Audit Requirements for Federal Awards, 2 CFR Part 200, other than such provisions as Treasury may determine are inapplicable to this Award and subject to such exceptions as may be otherwise provided by Treasury. Subpart F – Audit Requirements of the Uniform Guidance, implementing the Single Audit Act, shall apply to this award.<br>ii. Universal Identifier and System for Award Management (SAM), 2 CFR Part 25, pursuant to which the award term set forth in Appendix A to 2 CFR Part 25 is | Section 9901 of the American Rescue Plan Act, Pub. L. No. 117-2;<br>Section 602(b), 603(b) and/or 603(c) as applicable | Contractor RFP/IFB<br>Contractor RFQ<br>Subrecipients<br>Vendors |

| THRESHOLD | PROVISION | CITATION | PROVISION APPLIES TO |
|---|---|---|---|
| | hereby incorporated by reference.<br>iii. Reporting Subaward and Executive Compensation Information, 2 CFR Part 170, pursuant to which the award term set forth in Appendix A to 2 CFR Part 170 is hereby incorporated by reference.<br>iv. OMB Guidelines to Agencies on Governmentwide Debarment and Suspension (Non-procurement), 2 CFR Part 180, including the requirement to include a term or condition in all lower tier covered transactions (contracts and subcontracts described in 2 CFR Part 180, subpart B) that the award is subject to 2 CFR Part 180 and Treasury's implementing regulation at 31 CFR Part 19.<br>v. Recipient Integrity and Performance Matters, pursuant to which the award term set forth in 2 CFR Part 200, Appendix XII to Part 200 is hereby incorporated by reference.<br>vi. Governmentwide Requirements for Drug-Free Workplace, 31 CFR Part 20.<br>vii. New Restrictions on Lobbying, 31 CFR Part 21.<br>viii. Uniform Relocation Assistance and Real Property Acquisitions Act of 1970 (42 U.S.C. §§ 4601-4655) and implementing regulations.<br>ix. Generally applicable federal environmental laws and regulations.<br><br>c. Statutes and regulations prohibiting discrimination applicable to this award include, without limitation, the following:<br>i. Title VI of the Civil Rights Act of 1964 (42 U.S.C. §§ 2000d et seq.) and Treasury's implementing regulations at 31 CFR Part 22, which prohibit discrimination on the basis of race, color, or national origin under programs or activities receiving federal financial assistance;<br>ii. The Fair Housing Act, Title VIII of the Civil Rights Act of 1968 (42 U.S.C. §§ 3601 et seq.), which prohibits discrimination in housing on the basis of race, color, religion, national origin, sex, familial status, or disability;<br>iii. Section 504 of the Rehabilitation Act of 1973, as amended (29 U.S.C. § 794), which prohibits discrimination on the basis of disability under any program or activity receiving federal financial assistance;<br>iv. The Age Discrimination Act of 1975, as amended (42 U.S.C. §§ 6101 et seq.), and Treasury's implementing regulations at 31 CFR Part 23, which prohibit discrimination on the basis of age in programs or activities receiving federal financial assistance; and<br>v. Title II of the Americans with Disabilities Act of 1990, as amended (42 U.S.C. §§ 12101 et seq.), which prohibits discrimination on the basis of disability under programs, activities, and services provided or made available by state and local governments or instrumentalities or agencies thereto. | | |
| ARPA Terms, Conditions, & Records | 10. Remedial Actions. In the event of Recipient's noncompliance with section 603 of the Act, other applicable laws, Treasury's implementing regulations, guidance, or any reporting or other program requirements, Treasury may impose additional conditions on the receipt of a subsequent tranche of future award funds, if any, or take other available remedies as set forth in 2 CFR § 200.339. In the case of a violation of section 603(c) of the Act regarding the use of funds, previous payments shall be subject to recoupment as provided in section 603(e) of the Act. | Section 9901 of the American Rescue Plan Act, Pub. L. No. 117-2;<br>Section 602(b), 603(b) and/or 603(c) as applicable | Subrecipients |
| ARPA Terms, Conditions, & Records | 11. Hatch Act. Recipient agrees to comply, as applicable, with requirements of the Hatch Act (5 U.S.C. §§ 1501-1508 and 7324-7328), which limit certain political activities of State or local government employees whose principal employment is in connection with an activity financed in whole or in part by this federal assistance. | Section 9901 of the American Rescue Plan Act, Pub. L. No. 117-2;<br>Section 602(b), 603(b) and/or 603(c) as applicable | Subrecipients |
| ARPA Terms, Conditions, & Records | 12. False Statements. Recipient understands that making false statements or claims in connection with this award is a violation of federal law and may result in criminal, civil, or administrative sanctions, including fines, imprisonment, civil damages and penalties, debarment from participating in federal awards or | Section 9901 of the American Rescue Plan Act, Pub. L. No. 117-2; | Contractor RFP/IFB<br>Contractor RFQ<br>Subrecipients<br>Vendors |

| THRESHOLD | PROVISION | CITATION | PROVISION APPLIES TO |
|---|---|---|---|
| | contracts, and/or any other remedy available by law. | Section 602(b), 603(b) and/or 603(c) as applicable | |
| ARPA Terms, Conditions, & Records | 13. Publications. Any publications produced with funds from this award must display the following language: "This project [is being] [was] supported, in whole or in part, by federal award number [enter project FAIN] awarded to [name of Recipient] by the U.S. Department of the Treasury." | Section 9901 of the American Rescue Plan Act, Pub. L. No. 117-2; Section 602(b), 603(b) and/or 603(c) as applicable | Subrecipients |
| ARPA Terms, Conditions, & Records | 14. Debts Owed the Federal Government.<br>a. Any funds paid to Recipient (1) in excess of the amount to which Recipient is finally determined to be authorized to retain under the terms of this award; (2) that are determined by the Treasury Office of Inspector General to have been misused; or (3) that are determined by Treasury to be subject to a repayment obligation pursuant to section 603(e) of the Act and have not been repaid by Recipient shall constitute a debt to the federal government.<br>b. Any debts determined to be owed the federal government must be paid promptly by Recipient. A debt is delinquent if it has not been paid by the date specified in Treasury's initial written demand for payment, unless other satisfactory arrangements have been made or if the Recipient knowingly or improperly retains funds that are a debt as defined in paragraph 14(a). Treasury will take any actions available to it to collect such a debt. | Section 9901 of the American Rescue Plan Act, Pub. L. No. 117-2; Section 602(b), 603(b) and/or 603(c) as applicable | Subrecipients |
| ARPA Terms, Conditions, & Records | 15. Disclaimer.<br>a. The United States expressly disclaims any and all responsibility or liability to Recipient or third persons for the actions of Recipient or third persons resulting in death, bodily injury, property damages, or any other losses resulting in any way from the performance of this award or any other losses resulting in any way from the performance of this award or any contract, or subcontract under this award.<br>b. The acceptance of this award by Recipient does not in any way establish an agency relationship between the United States and Recipient. | Section 9901 of the American Rescue Plan Act, Pub. L. No. 117-2; Section 602(b), 603(b) and/or 603(c) as applicable | Subrecipients |
| ARPA Terms, Conditions, & Records | 16. Protections for Whistleblowers.<br>a. In accordance with 41 U.S.C. § 4712, Recipient may not discharge, demote, or otherwise discriminate against an employee in reprisal for disclosing to any of the list of persons or entities provided below, information that the employee reasonably believes is evidence of gross mismanagement of a federal contract or grant, a gross waste of federal funds, an abuse of authority relating to a federal contract or grant, a substantial and specific danger to public health or safety, or a violation of law, rule, or regulation related to a federal contract (including the competition for or negotiation of a contract) or grant.<br>b. The list of persons and entities referenced in the paragraph above includes the following:<br>i. A member of Congress or a representative of a committee of Congress;<br>ii. An Inspector General;<br>iii. The Government Accountability Office;<br>iv. A Treasury employee responsible for contract or grant oversight or management;<br>v. An authorized official of the Department of Justice or other law enforcement agency;<br>vi. A court or grand jury; or<br>vii. A management official or other employee of Recipient, contractor, or subcontractor who has the responsibility to investigate, discover, or address misconduct. | Section 9901 of the American Rescue Plan Act, Pub. L. No. 117-2; Section 602(b), 603(b) and/or 603(c) as applicable | Contractor RFP/IFB<br>Contractor RFQ<br>Subrecipients<br>Vendors |

| THRESHOLD | PROVISION | CITATION | PROVISION APPLIES TO |
|---|---|---|---|
| | c. Recipient shall inform its employees in writing of the rights and remedies provided under this section, in the predominant native language of the workforce. | | |
| ARPA Terms, Conditions, & Records | 17. Increasing Seat Belt Use in the United States. Pursuant to Executive Order 13043, 62 FR 19217 (Apr. 18, 1997), Recipient should encourage its contractors to adopt and enforce on-the-job seat belt policies and programs for their employees when operating company-owned, rented or personally owned vehicles. | Section 9901 of the American Rescue Plan Act, Pub. L. No. 117-2; Section 602(b), 603(b) and/or 603(c) as applicable | Contractor RFP/IFB<br>Contractor RFQ<br>Subrecipients<br>Vendors |
| ARPA Terms, Conditions, & Records | 18. Reducing Text Messaging While Driving. Pursuant to Executive Order 13513, 74 FR 51225 (Oct. 6, 2009), Recipient should encourage its employees, subrecipients, and contractors to adopt and enforce policies that ban text messaging while driving, and Recipient should establish workplace safety policies to decrease accidents caused by distracted drivers | Section 9901 of the American Rescue Plan Act, Pub. L. No. 117-2; Section 602(b), 603(b) and/or 603(c) as applicable | Contractor RFP/IFB<br>Contractor RFQ<br>Subrecipients<br>Vendors |

# EXHIBIT C – OTHER RELEVANT INFORMATION/SPECIAL CONDITIONS

Attach any relevant specifications, e.g., municipal/state code specifications, etc., that will be applicable to this purchase.

# ATTACHMENTS

**THE FOLLOWING DOCUMENTS MUST BE COMPLETED AND INCLUDED IN THE RESPONSE PACKAGE:**

| | | |
|---|---|---|
| 1. | ATTACHMENT A | SIGNED SOLICITATION RESPONSE COVER SHEET/ACKNOWLEDGEMENT OF ADDENDA/SUBMISSION CHECKLIST |
| 2. | ATTACHMENT B | PRICING SHEET |
| 3. | ATTACHMENT C | SYSTEM FOR AWARD MANAGEMENT (SAM.GOV) RECORD SEARCH |
| 4. | ATTACHMENT D | CUSTOMER/CLIENT REFERENCES |
| 5. | ATTACHMENT E | CERTIFICATE OF INSURANCE (IF APPLICABLE) |
| 6. | ATTACHMENT F | ETHICS AND CONFLICT OF INTEREST ACKNOWLEDGEMENT |
| 7. | ATTACHMENT G | STATEMENT OF CONFLICT OF INTEREST (IF ANY) |
| 8. | ATTACHMENT H | CONFLICT OF INTEREST QUESTIONNAIRE (FORM CIQ) |
| 9. | ATTACHMENT I | DISCLOSURE OF LOBBYING ACTIVITIES SF-LLL CERTIFICATION |
| 10. | ATTACHMENT J | TEXAS ETHICS COMMISSION CERTIFICATE OF INTERESTED PARTIES (FORM 1295) |
| 11. | ATTACHMENT K | BIDDER'S CERTIFICATION |
| 12. | ATTACHMENT L | NON-COLLUSION AFFIDAVIT |

# ATTACHMENT A:

## SOLICITATION RESPONSE COVER SHEET/ACKNOWLEDGMENT OF ADDENDA/SUBMISSION CHECKLIST

| | |
|---|---|
| **Title of Solicitation:** | |
| **Name of Respondent:** | |
| **Company:** | |
| **Mailing Address:** | |
| **City, State, Zip:** | |
| **Phone Number:** | |
| **Company Contact Email Address:** | |
| **Texas Vendor ID Number:** | |
| **EIN/Federal Tax Identification Number:** | |

**ACKNOWLEDGEMENT OF ADDENDA**

| ADDENDUM NO. | DATE ISSUED |
|---|---|
| | |
| | |
| | |
| | |

☐ Please check this box if no addenda were issued.

# ATTACHMENT A (CONTINUED)

## SOLICITATION RESPONSE COVER SHEET/ACKNOWLEDGMENT OF ADDENDA/ SUBMISSION CHECKLIST

This checklist is provided for the Respondent's use in assuring compliance with required documentation; however, it does not include all specification requirements and does not relieve the Respondent of the need to read and comply with the specifications. Your submittal of the documents attests to the fact that you have read and/or included the documents with your response.

**SUBMISSION CHECKLIST**

| CHECK FOR COMPLETION | DOCUMENTS REQUIRED FOR SUBMISSION |
|---|---|
| ☐ | A. Solicitation Response Cover Sheet/Acknowledgement of Addenda/Submission Checklist |
| ☐ | B. Pricing Sheet |
| ☐ | C. System for Award Management (SAM.gov) Record Search |
| ☐ | D. Customer/Client References |
| ☐ | E. Certificate of Insurance (if applicable) |
| ☐ | F. Ethics and Conflict of Interest Acknowledgement |
| ☐ | G. Statement of Conflicts of Interest (if any) |
| ☐<br>☐ | H. Conflict of Interest Questionnaire (Form CIQ)<br>Please check this box if the Respondent does not identify a conflict of interest and therefore, will not be submitting the Conflict of Interest Questionnaire Form CIQ. |
| ☐<br>☐ | I. Disclosure of Lobbying Activities SF-LLL Certification<br>(Required for all proposals exceeding $100,000)<br>Please check this box if the proposal does not exceed $100,000. |
| N/A | J. Texas Ethics Commission Certificate of Interested Parties (Form 1295)<br>(This is a sample and is only required to be completed by the Respondent selected for award.) |
| ☐ | K. Bidder's Certification |
| ☐ | L. Non-Collusion Affidavit |
| ☐ | |
| ☐ | |

The Respondent's authorized agent must sign this document to acknowledge having read this solicitation carefully and completely, including the list of addenda, and that the information submitted is true and correct.

| | |
|---|---|
| **AUTHORIZED AGENT NAME:** | |
| **AUTHORIZED SIGNATURE:** | |
| **TITLE OF AUTHORIZED AGENT:** | |
| **DATE OF SIGNATURE:** | |

## ATTACHMENT B: PRICING SHEET

Respondent shall complete and submit the following pricing sheet with the proposal response package. The Entity reserves the right to make an award on the basis of best value in the interest of the Entity. ALL PRICING MUST BE FIRM FIXED PRICING.

| ITEM | DESCRIPTION | QUANTITY | UNIT OF MEASURE | UNIT PRICE | EXTENSION |
|---|---|---|---|---|---|
| **1** | Entity should enter the description and quantity of the services/products as contained in the Scope of Work in Exhibit A | | | $ | $ |
| **2** | | | | $ | $ |
| **3** | | | | $ | $ |
| **4** | | | | $ | $ |
| **5** | | | | $ | $ |
| **TOTAL FIRM FIXED PRICE** | | | | | $ |
| **6** | **DELIVERY** – Number of calendar days for delivery after receipt of the order: | | | 90 calendar days | |

| | |
|---|---|
| Name of Firm: | |
| RFP #: | |
| RFP Name: | |

### AUTHORIZED AGENT – SIGNATURE AND CONTACT INFORMATION

The Respondent's authorized agent must sign this document to acknowledge they read this solicitation carefully and completely, and the information submitted is true and correct.

| | |
|---|---|
| **SIGNATURE OF AUTHORIZED AGENT:** | |
| **PRINTED NAME OF AUTHORIZED AGENT:** | |
| **TITLE OF AUTHORIZED AGENT:** | |
| **DATE OF SIGNATURE:** | |

## ATTACHMENT C: SYSTEM FOR AWARD MANAGEMENT (SAM.GOV) RECORD SEARCH

This project is funded by Coronavirus State and Local Fiscal Recovery Funds which requires all contractors and vendors to be in good standing according to SAM.gov and the Texas State Comptroller's office.

**Verification of SAM.gov Status**

1. Respondent must not be suspended or debarred at the time of the proposal submittal. The proposal response package must include a completed Non-Debarment Certification Form located **on the next page** herein.
2. All Respondents must be pre-vetted for eligibility to perform the outlined ARPA funded scope of work. A printed screenshot from the SAM.gov website verifies whether the Vendor is excluded from contract participation at the federal level.

**Contract Award**

The ARPA Award Recipient must verify the SAM.gov status of the Respondent(s) selected for contract award prior to execution of the contract as stated in the Non-Debarment Certification Form. The final verification of the Respondent's SAM.gov status is completed prior to contract award, and in addition to the initial verification documentation provided with the proposal response submittal.

| NON-DEBARMENT CERTIFICATION FORM | | | |
|---|---|---|---|
| **COMPANY/ENTITY LEGAL NAME:** | | | |
| **STREET ADDRESS:** | | | |
| **CITY:** | **STATE:** | **ZIP:** | |
| **CONTACT NAME:** | | | |
| **CONTACT EMAIL:** | | **CONTACT PHONE:** | |
| ***UEI #** | | ****TIN #** | |

*Subrecipients are required to have a Unique Entity Identifier (UEI) Number prior to an award. All entities must be pre-vetted for eligibility/ability to perform the outlined ARPA funded scope of work and a record (PDF of SAM.gov screenshot) of SAM debarment clearance must be obtained prior to entering into any final contracts. **Beneficiary Entities are required to have UEI and/or TIN.

**APPLICABLE REGULATIONS: As stated in the ARPA/SLFRF Terms & Conditions:** *"OMB Guidelines to Agencies on Governmentwide Debarment and Suspension (Nonprocurement), 2 CFR Part 180, including the requirement to include a term or condition in all lower tier covered transactions (contracts and subcontracts described in 2 CFR Part 180, subpart B) that the award is subject to 2 CFR Part 180 and Treasury's implementing regulation at 31 CFR Part 19."*

**Also, Federal Executive Order (E.O.) 12549:** "Debarment" requires that contractors, beneficiaries or subrecipient organizations and their principals – who are receiving awards, using federal funds, are not debarred, suspended, proposed for debarment, declared ineligible, or voluntarily excluded by any federal department or agency from doing business with the federal government. By signing this document, you certify that your organization and its principals are not debarred. Failure to comply or attempts to edit this language may disqualify you from receiving or retaining funds. Information on debarment is available at the following website: www.sam.gov

**Be advised that we may pursue available remedies per 2 CFR 180.360 as an ARPA recipient entity:** *"If a federal agency later determines that you failed to tell the [awarding agency] that you were excluded or disqualified at the time you entered into the covered transaction with that person/awarding agency, the agency may pursue any available remedies, including suspension and debarment."*

| [INITIAL] | CERTIFICATION & SIGNATURE |
|---|---|
| | **We hereby certify that we are not excluded, disqualified, or debarred from receiving federally funded awards.** |
| | **We hereby confirm that if that status should change within the course of this agreement, we will provide notification immediately. Failure to do so may result in this agreement's termination and/or the repayment of funds.** |

*Your signature certifies that the information provided on this form is correct and that neither you nor your principal(s) is/are presently debarred, suspended, proposed for debarment, declared ineligible, or voluntarily excluded from participation in this transaction by any federal department or agency.*

**SIGNATURE**

**PRINTED NAME & TITLE** **DATE**

| FOR DEPARTMENT USE ONLY | | |
|---|---|---|
| SAM Debarment/Certification Record of Clearance | Yes [ ] No [ ] | Note: |
| State of Texas Debarred Vendor List Cleared | Yes [ ] No [ ] | Note: |
| Verified By: | Yes [ ] No [ ] | Date: |

## ATTACHMENT D: CUSTOMER/CLIENT REFERENCES

Respondents shall use Attachment D to describe a minimum of three (3) and maximum of five (5) references for jobs, and corresponding references, completed within last five (5) years.

**Respondent's Name:** _____

The references shall illustrate recent experience successfully completing work of a similar nature and scope as the work described in this RFP. This form may be modified as needed to comply with the requirement to document company information. ***Failure to return this attachment (or a reasonable facsimile) may result in the proposal being considered non-responsive. Failure to provide references may result in the proposal being considered non-responsive.***

**REFERENCE 1:**

| | |
|---|---|
| **Company Name:** | |
| **Company Address:** | |
| **Contact Name/Title/Phone:** | |
| **Contact Email:** | |
| **Contract Award Date:** | |
| **Contract Completion Date:** | |
| **Contract Project Name:** | |
| **Brief Description of Services:** | |

**REFERENCE 2:**

| | |
|---|---|
| **Company Name:** | |
| **Company Address:** | |
| **Contact Name/Title/Phone:** | |
| **Contact Email:** | |
| **Contract Award Date:** | |
| **Contract Completion Date:** | |
| **Contract Project Name:** | |
| **Brief Description of Services:** | |

**REFERENCE 3:**

| | |
|---|---|
| **Company Name:** | |
| **Company Address:** | |
| **Contact Name/Title/Phone:** | |
| **Contact Email:** | |
| **Contract Award Date:** | |
| **Contract Completion Date:** | |
| **Contract Project Name:** | |
| **Brief Description of Services:** | |

**REFERENCE 4:**

| | |
|---|---|
| **Company Name:** | |
| **Company Address:** | |
| **Contact Name/Title/Phone:** | |
| **Contact Email:** | |
| **Contract Award Date:** | |
| **Contract Completion Date:** | |
| **Contract Project Name:** | |
| **Brief Description of Services:** | |

**REFERENCE 5:**

| | |
|---|---|
| **Company Name:** | |
| **Company Address:** | |
| **Contact Name/Title/Phone:** | |
| **Contact Email:** | |
| **Contract Award Date:** | |
| **Contract Completion Date:** | |
| **Contract Project Name:** | |
| **Brief Description of Services:** | |

# ATTACHMENT E: CERTIFICATE OF INSURANCE
## (PROPOSAL RESPONDER SUPPLIES INSURANCE WITH THE PROPOSAL PACKAGE)

**INSURANCE REQUIREMENTS**

If requested, the Respondent shall supply an original, certified copy of an insurance certificate listing **the Entity** as additional insured. The successful Respondent will be required to maintain, at all times during performance of the contract, the insurance detailed below. Failure to provide this insurance certificate within the specified amount of time may result in disqualification of bid.

a. Workers' Compensation Insurance as required by laws and regulations applicable to and covering employees of Contract engaged in the performance of the work under this agreement with a limit of not less than $1,000,000.00.

b. Employers' Liability Insurance protecting Responder against common law liability, in the absence of statutory liability, for employee bodily injury arising out of the master-servant relationship with a limit of not less than $1,000,000.00.

c. Comprehensive General Liability Insurance including products/completed operation with limits of liability of not less than: Bodily Injury $1,000,000.00 per each person, $2,000,000.00 per each occurrence/ aggregate; Property Damage $1,000,000.00 per each occurrence;

d. Excess Liability Insurance Comprehensive General Liability, Comprehensive Automobile Liability and coverages afforded by the policies above, with the minimum limits of $_____ excess of specified limits.

# ATTACHMENT F: ETHICS AND CONFLICT OF INTEREST ACKNOWLEDGEMENT

Public servants are expected to conduct themselves impartially and in a manner that inspires public confidence, while ensuring that responsible contractors have fair and equal access to governmental procurement.

The City of La Marque, Galveston County is committed to protection of government integrity, while also facilitating the recruitment and retention of the skilled personnel necessary to support its operations. To achieve this objective, The City of La Marque, Galveston County has established standards of ethical conduct and conflict of interest policies and expects all vendors, contractors, and subrecipients to adhere to the same core principles as described below.

To achieve these standards, it is essential that those doing business with the City of La Marque, Galveston County also observe the ethical standards prescribed here.

I acknowledge that it is a breach of ethics to attempt to influence any public employee, elected official, or department head to violate the standards of ethical conduct set forth in this code.

I further acknowledge that it is a breach of ethics for any employee of City of La Marque, Galveston County or a vendor doing business with the City of La Marque, Galveston County to participate directly or indirectly in a procurement when the employee or vendor knows that:

A. The employee or any member of the employee's immediate family or household has a substantial financial interest in a company responding to a City of La Marque, Galveston County procurement.

B. A business or organization in which the employee or any member of the employee's immediate family has a financial interest pertaining to the procurement.

I understand that it is a breach of ethics to offer, give, or agree to give any employee of City of La Marque, Galveston County, or for any employee to solicit, demand, accept, or agree to accept from a vendor, a gratuity of consequence or any offer of employment in connection with any decision, approval, disapproval, recommendation, preparation, or any part of a program requirement or purchase request influencing the content of specification or procurement standard, rendering of advice, investigation, auditing, or in any other advisory capacity in any proceeding or controversy, any particular matter pertaining to any program requirement, contract or subcontract, or to any solicitation or proposal therefore pending before City of La Marque, Galveston County.

I acknowledge that it is a breach of ethics for any payment, gratuity, or offer of employment to be made by or on behalf of a subcontractor under a contract to the prime contractor or higher tier subcontractor for any contract for City of La Marque, Galveston County as an inducement for the award of a contract or order.

I certify that I have read and understand the ethical standards set forth by City of La Marque, Galveston County and agree to comply with them in all business dealings with the City of La Marque, Galveston County.

| | |
|---|---|
| _____ | _____ |
| SIGNATURE, VENDOR AUTHORIZED REPRESENTATIVE | COMPANY |
| _____ | _____ |
| PRINTED NAME, TITLE | DATE |

## ATTACHMENT G: STATEMENT OF CONFLICTS OF INTEREST (IF ANY)

The Respondent vendor must describe any conflicts of interest regarding the goods and or services associated with this solicitation.

**The Respondent shall complete and submit Form CIQ (Attachment I) if the service provider or key employees have conflicts regarding these services**.

The conflict of interest statement is required if the service provider or key employees have conflicts regarding the services and a plan for mitigating the conflict(s).

**The Entity** may in its sole discretion determine whether a conflict disqualifies a firm, and/or whether a conflict mitigation plan is acceptable.

**If the Respondent does not identify a conflict, then they should enter no conflict identified on the Submission Checklist (Attachment A).**

## CONFLICT OF INTEREST QUESTIONNAIRE

**FORM CIQ**

**For vendor doing business with local governmental entity**

**This questionnaire reflects changes made to the law by H.B. 23, 84th Leg., Regular Session.**

This questionnaire is being filed in accordance with Chapter 176, Local Government Code, by a vendor who has a business relationship as defined by Section 176.001(1-a) with a local governmental entity and the vendor meets requirements under Section 176.006(a).

By law this questionnaire must be filed with the records administrator of the local governmental entity not later than the 7th business day after the date the vendor becomes aware of facts that require the statement to be filed. *See* Section 176.006(a-1), Local Government Code.

A vendor commits an offense if the vendor knowingly violates Section 176.006, Local Government Code. An offense under this section is a misdemeanor.

**OFFICE USE ONLY**

Date Received

1 **Name of vendor who has a business relationship with local governmental entity.**

2 ☐ **Check this box if you are filing an update to a previously filed questionnaire.** (The law requires that you file an updated completed questionnaire with the appropriate filing authority not later than the 7th business day after the date on which you became aware that the originally filed questionnaire was incomplete or inaccurate.)

3 **Name of local government officer about whom the information is being disclosed.**

_____
Name of Officer

4 **Describe each employment or other business relationship with the local government officer, or a family member of the officer, as described by Section 176.003(a)(2)(A). Also describe any family relationship with the local government officer. Complete subparts A and B for each employment or business relationship described. Attach additional pages to this Form CIQ as necessary.**

A. Is the local government officer or a family member of the officer receiving or likely to receive taxable income, other than investment income, from the vendor?

☐ Yes ☐ No

B. Is the vendor receiving or likely to receive taxable income, other than investment income, from or at the direction of the local government officer or a family member of the officer AND the taxable income is not received from the local governmental entity?

☐ Yes ☐ No

5 **Describe each employment or business relationship that the vendor named in Section 1 maintains with a corporation or other business entity with respect to which the local government officer serves as an officer or director, or holds an ownership interest of one percent or more.**

6 ☐ Check this box if the vendor has given the local government officer or a family member of the officer one or more gifts as described in Section 176.003(a)(2)(B), excluding gifts described in Section 176.003(a-1).

7

_____ _____
Signature of vendor doing business with the governmental entity Date

Form provided by Texas Ethics Commission www.ethics.state.tx.us Revised 1/1/2021

## CONFLICT OF INTEREST QUESTIONNAIRE
## For vendor doing business with local governmental entity

A complete copy of Chapter 176 of the Local Government Code may be found at http://www.statutes.legis.state.tx.us/Docs/LG/htm/LG.176.htm. For easy reference, below are some of the sections cited on this form.

**Local Government Code § 176.001(1-a):** "Business relationship" means a connection between two or more parties based on commercial activity of one of the parties. The term does not include a connection based on:

(A) a transaction that is subject to rate or fee regulation by a federal, state, or local governmental entity or an agency of a federal, state, or local governmental entity;

(B) a transaction conducted at a price and subject to terms available to the public; or

(C) a purchase or lease of goods or services from a person that is chartered by a state or federal agency and that is subject to regular examination by, and reporting to, that agency.

**Local Government Code § 176.003(a)(2)(A) and (B):**

(a) A local government officer shall file a conflicts disclosure statement with respect to a vendor if:

***

(2) the vendor:

(A) has an employment or other business relationship with the local government officer or a family member of the officer that results in the officer or family member receiving taxable income, other than investment income, that exceeds $2,500 during the 12-month period preceding the date that the officer becomes aware that

(i) a contract between the local governmental entity and vendor has been executed; or

(ii) the local governmental entity is considering entering into a contract with the vendor;

(B) has given to the local government officer or a family member of the officer one or more gifts that have an aggregate value of more than $100 in the 12-month period preceding the date the officer becomes aware that:

(i) a contract between the local governmental entity and vendor has been executed; or

(ii) the local governmental entity is considering entering into a contract with the vendor.

**Local Government Code § 176.006(a) and (a-1)**

(a) A vendor shall file a completed conflict of interest questionnaire if the vendor has a business relationship with a local governmental entity and:

(1) has an employment or other business relationship with a local government officer of that local governmental entity, or a family member of the officer, described by Section 176.003(a)(2)(A);

(2) has given a local government officer of that local governmental entity, or a family member of the officer, one or more gifts with the aggregate value specified by Section 176.003(a)(2)(B), excluding any gift described by Section 176.003(a-1); or

(3) has a family relationship with a local government officer of that local governmental entity.

(a-1) The completed conflict of interest questionnaire must be filed with the appropriate records administrator not later than the seventh business day after the later of:

(1) the date that the vendor:

(A) begins discussions or negotiations to enter into a contract with the local governmental entity; or

(B) submits to the local governmental entity an application, response to a request for proposals or bids, correspondence, or another writing related to a potential contract with the local governmental entity; or

(2) the date the vendor becomes aware:

(A) of an employment or other business relationship with a local government officer, or a family member of the officer, described by Subsection (a);

(B) that the vendor has given one or more gifts described by Subsection (a); or

(C) of a family relationship with a local government officer.

## ATTACHMENT I: DISCLOSURE OF LOBBYING ACTIVITIES
## SF-LLL CERTIFICATION REGARDING LOBBYING
***(TO BE SUBMITTED WITH EACH BID OR OFFER EXCEEDING $100,000)***

The undersigned certifies, to the best of his or her knowledge and belief, that:

(a) No Federal appropriated funds have been paid or will be paid, by or on behalf of the undersigned, to any person for influencing or attempting to influence an officer or employee of an agency, a Member of Congress, an officer or employee of Congress, or an employee of a Member of Congress in connection with the awarding of any Federal contract, the making of any Federal grant, the making of any Federal loan, the entering into of any cooperative agreement, and the extension, continuation, renewal, amendment, or modification of any Federal contract, grant, loan, or cooperative agreement.

(b) If any funds other than Federal appropriated funds have been paid or will be paid to any person for influencing or attempting to influence an officer or employee of any agency, a Member of Congress, an officer or employee of Congress, or an employee of a Member of Congress in connection with this Federal contract, grant, loan, or cooperative agreement, the undersigned shall complete and submit Standard Form-LLL, "Disclosure of Lobbying Activities," in accordance with its instructions.

(c) The undersigned shall require that the language in paragraphs (a) and (b) of this anti-lobbying certification be included in the award documents for all subawards at all tiers (including subcontracts, subgrants, and contracts under grants, loans, and cooperative agreements) and that all subrecipients shall certify and disclose accordingly.

This certification is a material representation of fact upon which reliance was placed when this transaction was made or entered into. Submission of this certification is a prerequisite for making or entering into this transaction imposed by 31, U.S.C. § 1352 (as amended by the Lobbying Disclosure Act of 1995).

The Contractor, _____ (insert business name), certifies or affirms the truthfulness and accuracy of each statement of its certification and disclosure, if any. In addition, the Contractor understands and agrees that the provisions of 31 U.S.C. § 3801 et seq., apply to this certification and disclosure, if any.

| | |
|---|---|
| **SIGNATURE** | |
| **NAME OF AUTHORIZED AGENT** | |
| **TITLE OF AUTHORIZED AGENT** | |
| **DATE** | |

# DISCLOSURE OF LOBBYING ACTIVITIES – INSTRUCTIONS

Instructions, searching existing data sources, gathering, and maintaining the data needed, and completing and reviewing the collection of information. Send comments regarding the burden estimate or any other aspect of this collection of information, including suggestions for reducing this burden, to the Office of Management and Budget, Paperwork Reduction Project (0348-0046), Washington, DC 20503. Approved by OMB 0348-0046. Complete this form to disclose lobbying activities pursuant to 31 U.S.C. 1352

| **1.Type of Federal Action:**<br><br>☐ a. contract<br>☐ b. grant<br>☐ c. cooperative agreement<br>☐ d. loan<br>☐ e. loan guarantee<br>☐ f. loan insurance | **2. Status of Federal Action:**<br><br>☐ a. bid/offer/application<br>☐ b. initial award<br>☐ c. post-award | **3. Report Type:**<br><br>☐ a. initial filing<br>☐ b. material change |
|---|---|---|
| **4. Name and Address of Reporting Entity:**<br>☐ Prime ☐ Subawardee Tier _____, *if known:*<br><br>Name:<br>Street Address:<br>City, State, Zip:<br>**Congressional District, if known:** | | **5. If Reporting Entity in No. 4 is Subawardee, Enter Name and Address of Prime:**<br><br>Name:<br>Street Address:<br>City, State, Zip:<br>**Congressional District, if known:** |
| **6. Federal Department/Agency:** | | **7. Federal Program Name/Description:**<br><br>CFDA Number, *if applicable*: _____ |
| **8. Federal Action Number, *if known:*** | | **9. Award Amount, *if known*:**<br><br>**$** |
| **10a. Name and Address of Lobbying Registrant**<br><br>Name (First, MI, Last):<br>Street Address:<br>City, State, Zip: | | **10b. Individuals Performing Services**<br>*(including address if different from No. 10a)*<br>Name (First, MI, Last):<br>Street Address:<br>City, State, Zip: |

**11.** Information requested through this form is authorized by Title 31 U.S.C., Section 1352. This disclosure of lobbying activities is a material representation of fact upon which reliance was placed by the tier above when this transaction was made or entered into. This disclosure is required pursuant to 31 U.S.C. 1352. This information will be reported to the Congress semi-annually and will be available for public inspection. Any person who fails to file the required disclosure shall be subject to a civil penalty of not less than $10,000 and not more than $100,000 for each such failure.

**Signature: _____**

**Name: _____** **Title: _____**

**Telephone: _____** **Date: _____**

| **Federal Use Only** | **Authorized for Local Reproduction**<br>**Standard Form – LLL (Rev. 7-97)** |
|---|---|

# ATTACHMENT J:TEXAS ETHICS COMMISSION CERTIFICATE OF INTERESTED PARTIES (FORM 1295)

*(TO BE COMPLETED BY THE AWARDED VENDOR PRIOR TO CONTRACT EXECUTION)*

## CERTIFICATE OF INTERESTED PARTIES — FORM 1295

OFFICE USE ONLY

Complete Nos. 1 - 4 and 6 if there are interested parties.
Complete Nos. 1, 2, 3, 5, and 6 if there are no interested parties.

1 Name of business entity filing form, and the city, state and country of the business entity's place of business.

2 Name of governmental entity or state agency that is a party to the contract for which the form is being filed.

3 Provide the identification number used by the governmental entity or state agency to track or identify the contract, and provide a description of the services, goods, or other property to be provided under the contract.

| 4 Name of Interested Party | City, State, Country (place of business) | Nature of Interest (check applicable) | |
|---|---|---|---|
| | | Controlling | Intermediary |
| | | | |
| | | | |
| | | | |
| | | | |
| | | | |
| | | | |
| | | | |

5 Check only if there is NO Interested Party. ☐

6 UNSWORN DECLARATION

My name is _____, and my date of birth is _____.

My address is _____, _____, _____, _____, _____.
(street) (city) (state) (zip code) (country)

I declare under penalty of perjury that the foregoing is true and correct.

Executed in _____ County, State of _____, on the _____ day of _____, 20_____.
(month) (year)

_____
Signature of authorized agent of contracting business entity
(Declarant)

ADD ADDITIONAL PAGES AS NECESSARY

Form provided by Texas Ethics Commission www.ethics.state.tx.us Revised 12/22/2017

Must file online at www.ethics.state.tx.us/File

## ATTACHMENT K: BIDDER'S CERTIFICATION

In accordance with Texas Government Code Sections 2252.001 through 2252.004 (relating to bids by nonresident contractors), the pertinent portion of the Act has been extracted and is as follows:

1. "Nonresident bidder" refers to a person who is not a resident.
2. "Resident bidder" refers to a person whose principal place of business is in this state, including a contractor whose ultimate parent company or majority owner has its principal place of business in this state.

A governmental entity may not award a governmental contract to a nonresident bidder unless the nonresident underbids the lowest bid submitted by a responsible resident bidder by an amount that is not less than the greater of the following:

1. the amount by which a resident bidder would be required to underbid the nonresident bidder to obtain a comparable contract in the state in which the nonresident's principal place of business is located; or
2. the amount by which a resident bidder would be required to underbid the nonresident bidder to obtain a comparable contract in the state in which a majority of the manufacturing relating to the contract will be performed.

I certify that _____ (Company Name) is a

☐ **Resident bidder of Texas** as defined in Section 2252.001(4), Texas Government Code,

**OR**

☐ **Nonresident bidder** as defined in Section 2252.001(3), Texas Government Code, and our principal place of business is located at _____ (City and State).

**Note: If the Respondent is an out-of-state company, a Certificate of Authority from the Secretary of State to do business in Texas must be provided.**

| | |
|---|---|
| **SIGNATURE** | |
| **NAME OF AUTHORIZED AGENT** | |
| **TITLE OF AUTHORIZED AGENT** | |
| **DATE** | |

## NON-COLLUSION AFFIDAVIT

STATE OF TEXAS §
§
COUNTY OF _____ §

By the signature below, the signatory for the bidder certifies that neither he/she nor the firm, corporation, partnership or institution represented by the signatory or anyone acting for the firm bidding this project has violated the antitrust laws of this State, codified at Section 15.01, *et seq.*, Texas Business and Commerce Code, or the Federal antitrust laws, nor communicated directly or indirectly the bid made to any competitor or any other person engaged in the same line of business, nor has the signatory or anyone acting for the firm, corporation or institution submitting a bid committed any other act of collusion related to the development and submission of this bid proposal.

Signature: _____

Printed Name: _____

Title: _____

Company: _____

Date: _____

SUBSCRIBED and sworn to before me the undersigned authority by _____ on the _____ day of _____, 20_____ on behalf of said bidder.

_____
Notary Public in and for the
State of Texas

My commission expires: _____

# APPENDIX I – SAMPLE CONTRACT

## SAMPLE CONTRACT – INVITATION FOR BID NON-CONSTRUCTION ONLY

**CITY OF LA MARQUE**
**AMERICAN RESCUE PLAN ACT (ARPA) PROGRAM**
**GENERAL SERVICES, SUPPLIES, AND/OR EQUIPMENT CONTRACT**

| | |
|---|---|
| **Vendor Name** | Vendor Name |
| **Vendor Unique Entity Identifier (UEI) if available** | XXXXXXXXXXXX |
| **Period of Performance Start Date** | |
| **Period of Performance End Date** | |
| **Amount of Federal Funds Obligated by this Agreement** | $000,000 |
| **Assisted Listing Number (ALN) #** 21.027 | **FAIN #** |

**INTRODUCTION**

THIS CONTRACT for General Services, Supplies, and/or Equipment ("Contract") is made and entered into this [Date], by and between [City of La Marque], Texas, hereinafter referred to as the "Entity" and [Vendor Name], hereinafter referred to as the "Vendor." Entity and Vendor are sometimes each referred to as a "Party" and collectively "Parties."

The following recitals are incorporated in and made a part of this Contract.

WHEREAS, on March 11, 2021, President Biden signed the U.S. Senate-amended H.R. 1319 (P.L. 117-2) known as the American Rescue Plan Act (hereinafter "ARPA"); and

WHEREAS, under ARPA Section 603 (c)(1)(A) and (3) and the Final Rule 31 CFR 35.6, recipients may use Coronavirus State and Local Fiscal Recovery Funds ("SLFRF") to allocate funds for the provision of government services and/or make necessary investments in water, sewer, and broadband infrastructure; and

WHEREAS, the Entity has determined that it has the objective of providing services to its residents; and

WHEREAS, the Entity has been awarded ARPA funds by the U.S. Department of the Treasury ("Treasury") which have been distributed to the Entity from ARPA for covered costs and eligible expenses to be incurred during the period which began on March 3, 2021 (the date ARPA became law) until December 31, 2024 (to be fully expended by December 31, 2026); and

WHEREAS, the Entity desires to disburse funds to the Vendor to perform certain services or provide certain supplies or equipment in connection therewith as set forth in this Contract and in the Scope of Services attached hereto; and

WHEREAS, Vendor has represented to the Entity that it is duly qualified, eligible, and willing to provide the services identified herein and in the Scope of Services attached hereto.

NOW, THEREFORE, in consideration of the foregoing recitals and the terms and conditions set forth herein, the Parties hereto do mutually agree as follows:

## SECTION 1. CONTRACT ADMINISTRATION

### SECTION 1.1 CONTACT INFORMATION & NOTICES

For the purposes of this Contract, the Entity's Representative listed below will serve as the primary point of contact for the Vendor. All required reports and communication shall be directed to this liaison and other local personnel as appropriate. The Vendor shall designate a Representative to act on Vendor's behalf for all purposes, including execution of Change Orders and Requests for Payment.

Any notice or communication required or permitted to be given under this Contract must be in writing. The initial contact information of the parties, which one party may change by giving written notice to the other party, are as follows:

| | | | |
|---|---|---|---|
| **Entity Name** | City of La Marque | **Vendor Name** | |
| **Entity Address 1** | 1111 Bayou Road | **Vendor Address 1** | |
| **Entity Address 2** | La Marque, Texas 77568 | **Vendor Address 2** | |
| | | | |
| **Entity Representative for Project** | | **Vendor Representative for Project** | |
| **Name** | Amanda Hobby | **Name** | |
| **Title** | Assistant Director of Public Works | **Title** | |
| **Phone** | (409) 795-7996 | **Phone** | |
| **Email** | a.hobby@cityoflamarque.org | **Email** | |
| **Entity Billing Contact** | | **Vendor Billing Contact** | |
| **Name** | Gina Galicia | **Name** | |
| **Title** | Accounts Payable Clerk | **Title** | |
| **Phone** | (409) 938-9214 | **Phone** | |
| **Email** | g.galicia@cityoflamarque.org | **Email** | |

## SECTION 1.2 PARTS INCORPORATED

Parts Incorporated. In addition to the Exhibits identified below which are incorporated into this Contract, it is understood and agreed that additional terms of this Contract are to be performed in accordance with the proposal documents (scope of work, images, and specifications), submitted proposal response and related exhibits, affidavits, addendums, statutory requirements, and the ARPA Terms & Conditions.

Exhibits

| | |
|---|---|
| Exhibit A1 | Scope of Work |
| Exhibit A2 | Payment & Pricing Schedule |
| Exhibit A3 | Request for Payment |
| Exhibit B | ARPA Required Contract Provisions |
| Exhibit C | Other Relevant Information/Special Conditions for Construction |
| Exhibit D | Insurance Certificate |
| Exhibit E | Bid, Performance, and Payment Bonds |
| Exhibit F | Eligibility Verification (SAM.gov) |
| Exhibit G | Certificate of Interested Parties (Form 1295) |

## SECTION 1.4 CONTRACT DOCUMENTS

By reference, the Contract Documents consist of:

a. This Contract and all exhibits listed, contained, or referenced in this Contract.

b. All Addenda issued before the Effective Date of this Contract;

c. All Alternates accepted by the Entity before the Effective Date of this Contract;

d. All Change Orders issued after the Effective Date of this Contract; and

e. The response submitted by Vendor in response to the IFB issued by Entity for this Project.

The Contract and Exhibit Documents form the entire and integrated Contract between Entity and Vendor, and supersede all prior negotiations, representations, or agreements, written or oral. To the extent of any conflict between Vendor's Proposal and any other Contract Document, the Contract Documents shall govern.

If there is an irreconcilable difference between or among the various documents that make up the Contract Documents, the interpretation that provides for a higher quality of material and/or workmanship will prevail over all other interpretations.

### 1.4.1 Term of Contract and Delivery Schedule – Commencement of Work

Entity shall issue a Notice to Proceed (NTP) identifying the date for commencement of the Work. Vendor shall achieve substantial completion of the Work within 90 calendar days after the commencement date; as such completion date may be extended by approved Change Orders. THE TIME SET FOR COMPLETION OF THE WORK IS AN ESSENTIAL ELEMENT OF THE CONTRACT. In any event, all of the services required and performed hereunder shall be completed no later than December 31, 2024.

### 1.4.2 Pre-Existing Conditions

Vendor acknowledges that it has been provided access to the existing improvements and conditions on the Project site and that it has thoroughly investigated those conditions. Vendor's investigation was instrumental in preparing its bid to perform the Work. Vendor shall not make or be entitled to any adjustment to the Contract Time or the Contract Sum arising from Project conditions that the Vendor discovered or, in the exercise of reasonable care, should have discovered

in Vendor's investigation.

### 1.4.3 Liquidated Damages

Vendor and Entity agree that a breach of this Contract as to completion time will cause damage to the Entity, but further agree that such damage cannot be accurately measured. Therefore, the Parties agree that $100.00 shall be subtracted from the Contract amount for each and every calendar day that the Work or any portion of the Work remains uncompleted after the expiration of the time period specified in the Notice to Proceed, or as extended by a change order.

### 1.4.4 Dispute Resolution

Disputes arising under the Contract shall be submitted to a process of resolution pursuant to alternative dispute resolution practices, such as mediation, binding arbitration, or non-binding arbitration pursuant to industry standards, prior to being submitted to a court for adjudication. It is understood that the Entity shall have the right to request mediation if services being provided are deemed deficient in any way.

### 1.4.5 Acquisition, Merger, Sale and/or Transfer of Business, etc.

It is understood by all parties that if, during the life of the Contract, the Vendor disposes of his/her business concern by acquisition, merger, sale, and or/transfer or by any means conveys his/her interest(s) to another party, all obligations are transferred to that new party. In this event, the new vendor will be required to submit all documentation/legal instruments that were required in the original bid/contract. Any change shall be approved by the Entity, who retains the right to reject the transfer of the contract.

### 1.4.6 Termination of Contract For Cause

This Contract may be terminated by the Entity for cause, including any nonperformance by the Vendor; failure of the Vendor to fulfill in a timely and proper manner its obligations under this Contract; or violation of any of the covenants, agreements, or stipulations of the Contract, upon thirty (30) days' written notice to Vendor including a statement of the reasons, therefore. The determination of the Entity as to the cause of termination and the appropriateness thereof shall be final and binding upon both Entity and Vendor. Cause for termination shall include any material failure by Vendor to comply with any terms of this Contract.

a. In such event, all finished or unfinished services, documents, data, maps, studies, surveys, drawings, models, photographs, and reports prepared by the Vendor under this Contract shall, at the option of the Entity, become its property, and the Vendor shall be entitled to receive just and equitable compensation for any work satisfactorily completed hereunder.

b. Notwithstanding the above, the Vendor shall not be relieved of liability to the Entity for damages sustained by the Entity by virtue of any breach of this Contract by the Vendor, and the Entity may withhold any payments to the Vendor for the purposes of set-off until such time as the exact amount of damages due the Entity from the Vendor is determined.

c. The Vendor agrees to indemnify and hold the Entity harmless from any liability to subcontractors or suppliers concerning payment for work performed or goods supplied arising out of the lawful termination of the Contract by the Entity under this provision.

d. In case of default by the Vendor, the Entity may procure the goods or services from other sources and hold the Vendor responsible for any excess cost.

e. Continuation of the terms of the Contract beyond the fiscal year is contingent on availability of funds in the following year's budget. In the event of unavailability of such funds, the Entity reserves the right to cancel the Contract.

f. If this Contract is terminated for cause, excluding funding discontinuance or disapproval, Vendor shall have the right to attempt to cure its failure during the thirty (30) day period prior to termination to the satisfaction of the Entity at the Entity's sole discretion.

### 1.4.7 Termination of Contract For Convenience of the Entity

The Entity may terminate this Contract at any time by giving at least thirty (30) days' notice in writing to the Vendor. If the Vendor is terminated by the Entity as provided herein, the Vendor will be paid for actual services provided or delivered purchases that are determined acceptable at the sole discretion of the Entity, less payments of compensation previously made. Vendor

### 1.4.8 Post Expiration and Termination Procedures

Upon expiration or in the event of a prior termination, all remaining and unspent ARPA funds, shall immediately become the sole and separate property of the Entity and the Vendor shall perform all acts and execute all instruments necessary to transfer and assign such funds to the Entity. All finished or unfinished documents, data, studies, reports, and work products prepared by the Vendor under this Contract or with grant funds shall, at the option of the Entity, become Entity's property.

### 1.4.9 Transitional Period

In the event services are terminated by contract expiration or by voluntary termination by either the Vendor or the Entity, the Vendor shall continue all terms and conditions of said Contract for a period not to exceed thirty (30) days at the Entity's request.

### 1.4.10 Ownership of Material

The Entity shall retain all of its rights and interest in any and all documents and property, both hard copy and digital furnished by the Entity to the Vendor for the purpose of assisting the Vendor in the performance of this Contract. All such items shall be returned immediately to the Entity at the expiration or termination of the Contract or completion of any related services pursuant thereto, whichever comes first. None of the documents and/or property shall, without the written consent of the Entity, be disclosed to others or used by the Vendor or permitted by the Vendor to be used by their parties at any time except in the performance of the resulting Contract. Ownership of all data, materials and documentation originated and prepared for the Entity pursuant to this Contract shall belong exclusively to the Entity. All data, reports, computerized information, programs, and materials related to this Project shall be delivered to and become the property of the Entity upon completion of the Project. The Vendor shall not have the right to use, sell, or disclose the total of the interim or final work products, or make available to third parties, without the prior written consent of the Entity.

## SECTION 1.5 CONTRACT SUM AND PAYMENTS

The Vendor shall be compensated per the schedule below. Payment to the Vendor shall be based on satisfactory completion of identified services and/or deliverables and payment/invoicing terms as stated in the IFB, or as mutually agreed upon and contained in this Contract. Payment is expressly contingent upon the availability of ARPA funding.

### 1.5.1 Contract Sum

Entity shall pay Vendor for performance of its obligations under this Contract, including the Base Proposal and Alternate Proposals (if any), the sum of [Spelled out dollar amount here] ($000,000.00), and make payment in accordance with the provisions of this Section.

### 1.5.2 Payment & Pricing Schedule

A Payment & Pricing Schedule (see **Exhibit A2**) subdividing the Project into its respective parts (f needed), and which includes values for all items comprising the Project will serve as the basis for payments made to Vendor.

### 1.5.3 Vendor's Payment Obligations

Vendor shall promptly pay all bills for labor and material performed and furnished by others in connection with this Contract.

a. Firm shall submit an invoice upon completion of each milestone. Deliverables will be considered complete only upon inspection and written acceptance by the Entity. Each invoice shall include deliverable(s) completed and

the price for each. **The final request for reimbursement must be received by City/County no later than September 30, 2026.**

### 1.5.4 Request for Payment

As instructed, all payment requests must be submitted on the Request for Payment (See **Exhibit A3**) including required attachments. Notwithstanding the certification of Vendor's payment requests, the Entity or its Representative will independently review Vendor's payment requests and make a determination as to the amount properly payable to Vendor.

### 1.5.5 Offsets; Deductions; Withholding

a. Entity is an agency of the State of Texas and materials and services utilized in the provision of services or purchases may be exempt from state and local taxes. Vendor is responsible for taking full advantage of all tax exemptions applicable to the Project. Entity will deduct from the Requests for Payment and from the Request for Final Payment any taxes paid for materials or services that were entitled to tax exemption.

b. Amounts assessed as liquidated damages per the above Section of this Contract and other amounts to which Entity is entitled by way of setoff or recovery, if any, shall be deducted from any amounts due Vendor.

c. Notwithstanding any other contractual provision to the contrary, Entity may withhold any payment from Vendor to the extent reasonably required to protect Entity interests under any of the following circumstances: failure to perform work in accordance with Contract Documents; insufficient documentation in Application for Payment; failure to pay subcontractors, employees, hired laborers or materials suppliers; failure to obtain, renew or maintain insurance coverage as required in this Contract; failure to meet schedule requirements or other scenarios that causes the Entity, in good faith judgment, to determine that the remaining balance will not be sufficient to complete the Work in accordance with this Contract. The right to withhold payment is contingent on giving Vendor a minimum of seven (7) calendar days' written notice of specific defects or defaults and an opportunity to cure same, and on Vendor's failure to cure or to take diligent steps to cure within such seven (7) calendar days.

### 1.5.6 Final Payment

Vendor's request for Final Payment must not be made until all Work is completed, all requirements of the Vendor Documents have been satisfied, and Vendor delivers the services or equipment.

## SECTION 2. ENTITY RESPONSIBILITIES

**SECTION 2.1 GENERAL**

a. Entity will cooperate in a timely manner in providing information regarding its requirements.

b. Entity will review and provide final approval of the general schedule, setting the plan for milestone dates and completion or delivery.

c. If the Entity has actual knowledge of any fault or defect or non-conformance with the Specifications, the Entity shall give prompt written notice of such fault, defect, or non-conformance to Vendor.

d. The Entity may designate one or more inspectors of its own who will be given access to the Work as requested or needed. The provision of such inspectors will not reduce or lessen in any respect Vendor's responsibilities for the Work.

e. The Entity may furnish or obtain all legal, accounting, auditing, and insurance counseling services for itself as may be necessary for the Project.

## SECTION 3. SCOPE OF WORK

### SECTION 3.1 GENERAL

Vendor has overall responsibility for and shall furnish all materials, equipment, tools, and labor necessary and reasonably inferable to complete the Work, or any phase of the Work, in accordance with Entity's requirements and the terms of the Contract Documents, including the Drawings, Specifications, Addenda, details, and other documents prepared by Vendor and listed in the attached Exhibits, if applicable.

Vendor's duties as set forth herein shall at no time be in any way diminished by reason of any approval by the Entity nor shall Vendor be released from any liability by reason of such approval by Entity, it being understood that Entity at all times is ultimately relying upon Vendor's skill and knowledge in performing the services required hereunder.

### SECTION 3.2 PROJECT CONTROL

Vendor shall supervise and direct the Work and shall be solely responsible for means, methods, techniques, sequences, and procedures for the Work. Vendor shall promptly correct any defective or non-conforming Work at Vendor's sole expense and without cost to Entity.

### SECTION 3.3 SUBVENDORS

Vendor shall award and enter into all Subcontracts necessary and appropriate to provide all labor and materials for the scope of work.

a. Vendor shall monitor the Work of the Subcontractors as required and coordinate such Work with a goal to attain Substantial Completion not later than the date for Substantial Completion and at a cost not to exceed the Contract Sum.

b. Upon request, Vendor shall provide Entity with complete, unaltered copies of all Subcontracts, and all amendments thereto.

### SECTION 3.4 HUB SUBCONTRACTING PLAN

Vendor shall comply with the requirements of the HUB Subcontracting Plan and shall not make any changes to the HUB Subcontracting Plan without Entity's written approval.

### SECTION 3.5 KEY TASKS

a. Provide services and purchase of equipment in accordance with delivery schedules and other prescribed timelines herein.

b. Provide a warranty on all purchased equipment.

c. Provide excellent customer service. Firm shall be responsive to requests and communicate on a regular basis with the Entity.

d. Provide and maintain all original and copies of supporting documentation.

e. Furnish progress reporting as determined or requested by the Entity.

f. Support and assist the Entity during state/federal monitoring or auditing activities, including providing financial information, reports, and other requests that may be required.

### SECTION 3.6 SCHEDULING

Vendor is solely responsible for delivery of the services/equipment in accordance with the Contract Documents on or before the date specified in the Schedule.

### SECTION 3.7 NON-CONFORMING WORK

Entity may reject any defective or non-conforming Work on the Project of which Entity becomes aware and Vendor shall promptly correct any such defect at Vendor's own cost without increasing the Contract Sum. Upon discovering that any portion of the Work does not conform with Entity's design concept and/or requirements, including the Design Guidelines and Standard Specifications, due to an error or omission in any Construction Document materials prepared or furnished by or on behalf of Vendor, Vendor shall promptly correct such condition at no additional cost to Entity. If Vendor refuses or fails to correct (or improperly corrects) any such condition within a reasonable time after notice, Entity may cause the condition to be corrected and offset the cost of such correction against any monies owed to Vendor; provided, however, if no monies are owed Vendor at the time the condition is discovered or at the time the condition is corrected by Entity, Vendor shall promptly reimburse the Entity for all expenses incurred to correct the condition. Vendor shall warranty all corrective Work, whether performed by or through Vendor or by a third party retained by Entity in accordance with the immediately preceding sentence due to Vendor's refusal or failure to correct properly any non-conforming Work.

## SECTION 3.8 INDEMNIFICATION

Vendor covenants and agrees to indemnify, hold harmless and defend, at its own sole expense, the Entity and its officers, agents, servants, and employees from and against any and all claims or suits for property loss or damage and/or personal injury, including death, to any and all persons, of whatsoever kind or character, whether real or asserted, arising out of or in connection with the execution, performance, attempted performance, or nonperformance of the services under this Contract and/or the operations, activities, and services of the activities described herein; and Vendor hereby assumes all liability and responsibility of the entity and its officers, agents, servants, and employees for any and all claims or suits for property loss or damage and/or personal injury, including death, to any and all persons, of whatsoever kinds or character, whether real or asserted, arising out of or in connection with the execution, performance, attempted performance, or nonperformance of the services or this Contract and/or the operations, activities, and services described herein. Vendor likewise covenants and agrees to and does hereby indemnify and hold harmless entity from and against any and all injury, damage, or destruction of property of entity, arising out of or in connection with all acts or omissions of Vendor, its officers, members, agents, employees, contractors, subcontractors, invitees, licensees, and project participants. Vendor agrees to and shall release Entity, its agents, employees, officers, and legal representatives from all liability for injury, death, damage, or loss to persons or property sustained in connection with or incidental to performance of the services under this Contract.

Vendor shall require all of its contractors and subcontractors to include in its contracts and subcontracts a release and indemnity in favor of the Entity in substantially the same form as above. The indemnity and liability release provided for above shall not apply to any liability resulting from the sole negligence or fault of the Entity, its officers, agents, employees or separate Vendors, and in the event of joint and concurring negligence or fault of the Entity and Vendor, responsibility and indemnity, if any, shall be apportioned in accordance with the laws of the State of Texas, without waiving any governmental immunity available to the entity under Texas law and without waiving any defenses of the parties under Texas law.

The provisions of this section are solely for the benefit of the parties and are not intended to create or grant any rights, contractual or otherwise, to any other person or entity. This section survives termination or expiration of this Contract.

## SECTION 3.9 INSURANCE & BONDING

If applicable, Vendor shall provide Insurance and Bid, Performance, and Payment Bonds as prescribed by Entity in the Solicitation documentation and included here as **Exhibit D** and **Exhibit E**.

# SECTION 4. REQUIRED PROVISIONS

The Vendor shall comply with the following items:

## SECTION 4.1 TERMS AND CONDITIONS

The Vendor agrees to comply with the requirements of Section 503 of the American Rescue Plan Act (ARPA), regulations adopted by Treasury pursuant to Section 603(f) of the Act, and guidance issued by Treasury regarding the foregoing. Vendor also specifically agrees to comply with the ARPA Terms & Conditions attached to this Contract in **Exhibit B.**

**SECTION 4.2 DEBARMENT AND SUSPENSION**

Vendor has provided proof of registration, active/good standing, and non-debarment status in the System for Award Management. Should this status change, the Vendor must notify the Entity immediately.

**SECTION 4.3 ASSURANCES OF COMPLIANCE WITH TITLE VI**

The Vendor shall comply with Title VI of the Civil Rights Act of 1964, which prohibits recipients of federal financial assistance from excluding from a program or activity, denying benefits of, or otherwise discriminating against a person on the basis of race, color, or national origin (42 U.S.C. § 2000d et seq.), as implemented by the Department of the Treasury's Title VI regulations, 31 CFR Part 22, which are herein incorporated by reference and made a part of this contract. Title VI also includes protection to persons with "Limited English Proficiency" in any program or activity receiving federal financial assistance, 42 U.S.C. § 2000d et seq., as implemented by the Department of the Treasury's Title VI regulations, 31 CFR Part 22, and herein incorporated by reference and made a part of this contract.

**SECTION 4.4 LOBBYING CERTIFICATION & DISCLOSURE**

No Federal appropriated funds have been paid or will be paid, by or on behalf of the undersigned, to any person for influencing or attempting to influence an officer or employee of an agency, a Member of Congress, an officer or employee of Congress, or an employee of a Member of Congress in connection with the awarding of any Federal contract, the making of any Federal grant, the making of any Federal loan, the entering into of any cooperative agreement, and the extension, continuation, renewal, amendment, or modification of any Federal contract, grant, loan, or cooperative agreement.

**SECTION 4.5 ETHICS MATTERS**

Vendor and its employees, agents, representatives, and subcontractors have ready and understand the Entity's Conflict of Interest Policy, State of Texas Standards of Conduct and Conflict of Interest Provisions available at Government Code Chapter 572: Personal Financial Disclosure, Standards of Conduct, and Conflict of Interest (state.tx.us), and applicable state ethics laws and rules available. Neither Vendor nor its employees, agents, representatives, or subcontractors will assist or cause Entity employees to violate the Conflict of Interest policies, provisions described by State of Texas Standards of Conduct and Conflict of Interest Provisions, or applicable state ethics laws or rules.

**SECTION 4.6 MAINTENANCE AND ACCESS TO RECORDS**

The Vendor shall maintain records and financial documents sufficient to evidence in compliance with Section 603(c) of the Act, Treasury's regulations implementing that section, and guidance issued by Treasury regarding the foregoing.

The Treasury Office of Inspector General, the Government Accountability Office and the Texas Office of the State Comptroller, or their authorized representatives, shall have the right of access to records (electronic and otherwise) of the Vendor in order to conduct audits or other investigations and all records shall be made available upon request. Records shall be maintained by the Vendor for a period of five (5) years after all funds have been expended or returned to the Treasury, whichever is later.

## SECTION 5. MISCELLANEOUS PROVISIONS

**SECTION 5.1 GENERAL**

a. In any case one or more of the provisions contained in this Contract shall for any reason be held to be invalid, illegal, or unenforceable in any respect, such invalidity, illegality, or unenforceability shall not affect any other provision thereof and this Contract shall be construed as if such invalid, illegal, or unenforceable provision had never been contained herein.

b. If any action at law or in equity is necessary to enforce or interpret the terms of this Contract, the prevailing party shall be entitled to reasonable attorney's fees, costs, and necessary disbursements in addition to any other relief to which such party may be entitled.

c. This Contract may be amended by mutual agreement of the parties hereto and a writing to be attached to be

incorporated into this Contract.

d. Licenses, Permits, Taxes, Fees, Laws, and Regulations

i. Vendor warrants that it will obtain, maintain in effect, and pay the cost for all licenses, permits, or certifications that may be necessary for Vendor's performance of this Contract.

ii. Vendor will be responsible for the payment of all taxes, excises, fees, payroll deductions, employee benefits (if any), fines, penalties or other payments required by federal, state, or local law or regulation in connection with Vendor's performance of this Contract.

iii. Vendor will comply with and will be responsible for requiring its officers and employees to comply with all applicable federal, state, and local laws and regulations, and the rules and regulations of the Entity.

## SECTION 5.2 CAPACITY TO PERFORM

By execution of this Contract, Vendor is certifying that they have the capacity to perform and complete the Scope of Work as provided.

## SECTION 5.3 LIMITATION OF LIABILITY

Except for the obligation of Entity to pay Vendor certain fees, costs, and expenses to the extent expressly set forth in this Contract, the Entity shall have no liability to Vendor or to anyone claiming through or under Vendor by reason of the execution or performance of this Contract. Notwithstanding any obligation or liability of Entity to Vendor, no present or future partner or affiliate of the Entity or any agent, officer, director, or employee of the Entity or anyone claiming under the Entity, has or shall have any personal liability to Vendor or to anyone claiming through or under Vendor by reason of the execution or performance of this Contract.

## SECTION 5.4 ASSIGNMENT

This Contract is a personal service contract for the services of Vendor, and neither Vendor's interest in this Contract (including, but not limited to Vendor's fees due hereunder), nor Vendor's duties hereunder may be assigned or delegated to a third party except as specifically set forth in this Contract.

## SECTION 5.5 GOVERNING LAW AND VENUE

The Vendor agrees to comply with the requirements of Section 603 of the Act, regulations adopted by Treasury pursuant to Section 603(f) of the Act, and guidance issued by Treasury regarding the foregoing.

Additionally, all applicable local government codes for the State of Texas also apply to this Contract. All equipment, supplies, and work furnished under this Contract shall comply with applicable laws, ordinances, and regulations. Vendor shall obtain and pay for such permits and inspections as are required for the legal performance of this work, unless otherwise specified. Vendor shall comply with all federal and state laws and Entity's Ordinances and Codes applicable to the Vendor's operation under this Contract. These Specifications and the Contract resulting here from shall be fully governed by the laws of the State of Texas and shall be fully performable in La Marque (Entity Name), Texas, where venue for any proceeding arising hereunder will lie.

This Contract will be governed by the laws of the State of Texas without reference to its conflicts of law provisions. Venue for any suits arising from this Contract will be in a court of competent jurisdiction in Galveston County, Texas.

## SECTION 5.6 WAIVERS

No delay or omission by either Party in exercising any right or power accruing upon the non-compliance or failure of performance by the other Party of any provision of this Contract or the Contract Documents will impair any such right or power or be construed to be a waiver thereof. A waiver by either Party of any of the covenants, conditions, or agreements of this Contract or any of the Contract Documents to be performed by the other party will not be construed to be a waiver of any subsequent breach of this Contract or the Contract Documents or of any other covenant, condition or agreement contained in this Contract or the Contract Documents.

## SECTION 5.7 SEVERABILITY

If any provision of this Contract is for any reason be held invalid or unenforceable in any respect, such invalidity or unenforceability shall not affect any other provision of this Contract and this Contract will be construed as if such invalid or unenforceable provision had not been included herein.

**SECTION 5.8 NEW LAWS**

Parties agree that if there is a change in any laws, rules, or regulations affecting the performance related to this Contract and enacted after the Effective Date of this Contract, the Parties will enter into good faith negotiations to renegotiate the affected terms of this Contract.

BY: _____
(Entity Official)

_____
(Printed Name)

_____
(Title)

_____
(Date)

BY: _____
(Vendor's Authorized Representative)

_____
(Printed Name)

_____
(Title)

_____
(Date)

## SECTION 6. EXHIBITS

**THE FOLLOWING DOCUMENTS MUST BE COMPLETED AND ATTACHED TO THE CONTRACT:**

| | |
|---|---|
| Exhibit A1 | Scope of Work |
| Exhibit A2 | Payment & Pricing Schedule |
| Exhibit A3 | Request for Payment |
| Exhibit B | ARPA Required Provisions (ARPA Terms & Conditions) |
| Exhibit C | Other Relevant Information |
| Exhibit D | Insurance Certificate (if applicable) |
| Exhibit E | Bid, Performance, and Payment Bonds (if applicable) |
| Exhibit F | Eligibility Verification (SAM.gov) |
| Exhibit G | Certificate of Interested Parties (Form 1295) |

## Exhibit A1 – Scope of Work

To be populated with solicitation Scope of Work

## Exhibit A2 – Payment & Pricing Schedule

The terms for payment for the contract are as follows:

**Payment Schedule:**

Payment will be made within 30 days of a Request for Payment and only after delivery of all services and/or purchases and acceptance by the Entity.

**Pricing Schedule:**

Prices for all goods and/or services shall be all inclusive.

Entity is an agency of the State of Texas and materials and services utilized in the provision of services or purchases may be exempt from state and local taxes. Vendor is responsible for taking full advantage of all tax exemptions applicable to the Project. Entity will deduct from the Requests for Payment and from the Request for Final Payment any taxes paid for materials or services that were entitled to tax exemption.

**Lump Sum Price:** Vendor shall provide pricing in the table below to complete the scope of services contained in **Exhibit A1**, Scope of Work, in accordance with the specifications contained in this document. Costs include all applicable services (i.e. labor, materials, profit, bonding, insurance, permitting, general conditions, and other costs) to provide a turnkey product.

(Note to Entity: Component pricing should be based on the identified components of the scope of work contained in **Exhibit A1**). An example is provided below:

| SCOPE OF WORK | PRICE |
|---|---|
| | $ |
| | $ |
| | $ |
| | $ |
| **TOTAL LUMP SUM PRICE (TOTAL OF ABOVE LINE ITEMS)** | **$** |

## Exhibit A3 – Request for Payment

| | | | |
|---|---|---|---|
| **Project Name:** | | | |
| **Vendor Name:** | | | |
| **Date of Request:** | | | |
| **Contact Name:** | | | |
| **Contact Phone:** | | **Contact Email:** | |

| Item for Payment | Description | Unit Cost or Percent Complete | # of Units | Total Amount |
|---|---|---|---|---|
| | | | | |
| | | | | |
| | | | | |
| **TOTAL** | | | | |

| X | Attachments |
|---|---|
| | |
| | |

| Submitted By | |
|---|---|
| **Name and Title** | |
| **Signature** | |

**CERTIFICATION:** I certify that this Request for Payment contains costs associated with the provision of services in accordance with the terms of the contract. I also certify that all required documentary evidence has been submitted along with the Request for Payment as instructed, including any documentation associated with requirement to pay prevailing wages.

By signing this Request for Payment, I certify to the best of my knowledge and belief that information provided in this Request is true, complete, and accurate. I am aware that any false, fictitious, or fraudulent information, or the omission of any material fact, may subject me to criminal, civil or administrative penalties for fraud, false statements, false claims or otherwise.

**WARNING**: Section 1001 of Title 18 U.S. code makes it a criminal offense to make willful, false statements or misrepresentation of any material fact involving the use of or obtain federal funds.

# Exhibit B – ARPA Required Provisions

2 CFR 200.327 Contract provisions. The Non-Federal entity's contracts should contain applicable provisions described in Appendix II to Part 200—Contract Provisions for Non-Federal Entity Contracts Under Federal Awards. The Non-Federal entity's contracts must contain the provisions described in Appendix II to Part 200—Contract Provisions for Non-Federal Entity Contracts Under Federal Awards, as applicable.

| THRESHOLD | PROVISION | CITATION | PROVISION APPLIES TO |
|---|---|---|---|
| | 2 CFR 200 Appendix II (A-L) | | |
| >$250,000 (Simplified Acquisition Threshold) | Contracts for more than the simplified acquisition threshold, which is the inflation adjusted amount determined by the Civilian Agency Acquisition Council and the Defense Acquisition Regulations Council (Councils) as authorized by 41 U.S.C. 1908, must address administrative, contractual, or legal remedies in instances where contractors violate or breach contract terms, and provide for such sanctions and penalties as appropriate. | 2 CFR 200<br>APPENDIX II (A) | Contractor RFP/IFB<br>Contractor RFQ<br>Subrecipients |
| >$10,000 | All contracts in excess of $10,000 must address termination for cause and for convenience by the Non-Federal entity including the manner by which it will be affected and the basis for settlement. | 2 CFR 200<br>APPENDIX II (B) | Contractor RFP/IFB<br>Contractor RFQ<br>Subrecipients |
| None | Equal Employment Opportunity. Except as otherwise provided under 41 CFR Part 60, all contracts that meet the definition of "federally assisted construction contract" in 41 CFR Part 60-1.3 must include the equal opportunity clause provided under 41 CFR 60-1.4(b), in accordance with Executive Order 11246, "Equal Employment Opportunity" (30 FR 12319, 12935, 3 CFR Part, 1964-1965 Comp., p. 339), as amended by Executive Order 11375, "Amending Executive Order 11246 Relating to Equal Employment Opportunity," and implementing regulations at 41 CFR part 60, "Office of Federal Contract Compliance Programs, Equal Employment Opportunity, Department of Labor."<br>41 CFR 60-1.4 Equal opportunity clause.<br>(b) Federally assisted construction contracts. (1) Except as otherwise provided, each administering agency shall require the inclusion of the following language as a condition of any grant, contract, loan, insurance, or guarantee involving federally assisted construction which is not exempt from the requirements of the equal opportunity clause:<br>The [recipient] hereby agrees that it will incorporate or cause to be incorporated into any contract for construction work, or modification thereof, as defined in the regulations of the Secretary of Labor at 41 CFR Chapter 60, which is paid for in whole or in part with funds obtained from the Federal Government or borrowed on the credit of the Federal Government pursuant to a grant, contract, loan, insurance, or guarantee, or undertaken pursuant to any Federal program involving such grant, contract, loan, insurance, or guarantee, the following equal opportunity clause:<br>During the performance of this contract, the contractor agrees as follows:<br>(9) The contractor will not discriminate against any employee or applicant for employment because of race, color, religion, sex, sexual orientation, gender identity, or national origin. The contractor will take affirmative action to ensure that applicants are employed, and that employees are treated during employment without regard to their race, color, religion, sex, sexual orientation, gender identity, or national origin. Such action shall include, but not be limited to the following:<br>Employment, upgrading, demotion, or transfer; recruitment or recruitment advertising; layoff or termination; rates of pay or other forms of compensation; and selection for training, including apprenticeship. The contractor agrees to post in conspicuous places, available to employees and applicants for employment, notices to be provided setting forth the provisions of this nondiscrimination clause.<br>(10) The contractor will, in all solicitations or advertisements for employees placed by | 2 CFR 200<br>APPENDIX II (C)<br>and<br>41 CFR §60-1.4(b) | Contractor RFP/IFB<br>Contractor RFQ<br>Subrecipients |

| THRESHOLD | PROVISION | CITATION | PROVISION APPLIES TO |
|---|---|---|---|
| | or on behalf of the contractor, state that all qualified applicants will receive consideration for employment without regard to race, color, religion, sex, sexual orientation, gender identity, or national origin.<br>(11) The contractor will not discharge or in any other manner discriminate against any employee or applicant for employment because such employee or applicant has inquired about, discussed, or disclosed the compensation of the employee or applicant or another employee or applicant. This provision shall not apply to instances in which an employee who has access to the compensation information of other employees or applicants as a part of such employee's essential job functions discloses the compensation of such other employees or applicants to individuals who do not otherwise have access to such information, unless such disclosure is in response to a formal complaint or charge, in furtherance of an investigation, proceeding, hearing, or action, including an investigation conducted by the employer, or is consistent with the contractor's legal duty to furnish information.<br>(12) The contractor will send to each labor union or representative of workers with which he has a collective bargaining agreement or other contract or understanding, a notice to be provided advising the said labor union or workers' representatives of the contractor's commitments under this section and shall post copies of the notice in conspicuous places available to employees and applicants for employment.<br>(13) The contractor will comply with all provisions of Executive Order 11246 of September 24, 1965, and of the rules, regulations, and relevant orders of the Secretary of Labor.<br>(14) The contractor will furnish all information and reports required by Executive Order 11246 of September 24, 1965, and by rules, regulations, and orders of the Secretary of Labor, or pursuant thereto, and will permit access to his books, records, and accounts by the administering agency and the Secretary of Labor for purposes of investigation to ascertain compliance with such rules, regulations, and orders.<br>(15) In the event of the contractor's noncompliance with the nondiscrimination clauses of this contract or with any of the said rules, regulations, or orders, this contract may be canceled, terminated, or suspended in whole or in part and the contractor may be declared ineligible for further Government contracts or federally assisted construction contracts in accordance with procedures authorized in Executive Order 11246 of September 24, 1965, and such other sanctions may be imposed and remedies invoked as provided in Executive Order 11246 of September 24, 1965, or by rule, regulation, or order of the Secretary of Labor, or as otherwise provided by law.<br>(16) The contractor will include the portion of the sentence immediately preceding paragraph (1) and the provisions of paragraphs (1) through (8) in every subcontract or purchase order unless exempted by rules, regulations, or orders of the Secretary of Labor issued pursuant to section 204 of Executive Order 11246 of September 24, 1965, so that such provisions will be binding upon each subcontractor or vendor. The contractor will take such action with respect to any subcontract or purchase order as the administering agency may direct as a means of enforcing such provisions, including sanctions for noncompliance:<br>Provided, however, that in the event a contractor becomes involved in, or is threatened with, litigation with a subcontractor or vendor as a result of such direction by the administering agency, the contractor may request the United States to enter into such litigation to protect the interests of the United States.<br>The [recipient] further agrees that it will be bound by the above equal opportunity clause with respect to its own employment practices when it participates in federally assisted construction work: Provided, that if the [recipient] so participating is a State or local government, the above equal opportunity clause is not applicable to any agency, instrumentality or subdivision of such government which does not participate in work on or under the contract.<br>The [recipient] agrees that it will assist and cooperate actively with the administering agency and the Secretary of Labor in obtaining the compliance of contractors and subcontractors with the equal opportunity clause and the rules, regulations, and | | |

| THRESHOLD | PROVISION | CITATION | PROVISION APPLIES TO |
|---|---|---|---|
| | relevant orders of the Secretary of Labor, that it will furnish the administering agency and the Secretary of Labor such information as they may require for the supervision of such compliance, and that it will otherwise assist the recipient agency in the discharge of the agency's primary responsibility for securing compliance.<br><br>The recipient further agrees that it will refrain from entering into any contract or contract modification subject to Executive Order 11246 of September 24, 1965, with a contractor debarred from, or who has not demonstrated eligibility for, Government contracts and federally assisted construction contracts pursuant to the Executive Order and will carry out such sanctions and penalties for violation of the equal opportunity clause as may be imposed upon contractors and subcontractors by the administering agency or the Secretary of Labor pursuant to Part II, Subpart D of the Executive Order. In addition, the [recipient] agrees that if it fails or refuses to comply with these undertakings, the administering agency may take any or all of the following actions: cancel, terminate, or suspend in whole or in part this grant (contract, loan, insurance, guarantee); refrain from extending any further assistance to the [recipient] under the program with respect to which the failure or refund occurred until satisfactory assurance of future compliance has been received from such [recipient]; and refer the case to the Department of Justice for appropriate legal proceedings. | | |
| >$10,000,000 for ARPA but State Provision Applies at any amount and/or<br><br>>$2,000 for CDBG/Braided Funds Projects<br><br>See TX Prevailing Wage Laws | Davis-Bacon Act, as amended (40 U.S.C. 3141-3148). When required by Federal program legislation, all prime construction contracts in excess of $10,000,00 awarded by Non-Federal entities must include a provision for compliance with the Davis-Bacon Act (40 U.S.C. 3141-3144, and 3146-3148) as supplemented by Department of Labor regulations (29 CFR Part 5, "Labor Standards Provisions Applicable to Contracts Covering Federally Financed and Assisted Construction"). In accordance with the statute, contractors must be required to pay wages to laborers and mechanics at a rate not less than the prevailing wages specified in a wage determination made by the Secretary of Labor. In addition, contractors must be required to pay wages not less than once a week. The Non-Federal entity must place a copy of the current prevailing wage determination issued by the Department of Labor in each solicitation. The decision to award a contract or subcontract must be conditioned upon the acceptance of the wage determination. The Non-Federal entity must report all suspected or reported violations to the Federal awarding agency.<br><br>The contracts must also include a provision for compliance with the Copeland "Anti-Kickback" Act (40 U.S.C. 3145), as supplemented by Department of Labor regulations (29 CFR Part 3, "Contractors and Subcontractors on Public Building or Public Work Financed in Whole or in Part by Loans or Grants from the United States"). The Act provides that each contractor or subrecipient must be prohibited from inducing, by any means, any person employed in the construction, completion, or repair of public work, to give up any part of the compensation to which he or she is otherwise entitled. The Non-Federal entity must report all suspected or reported violations to the Federal awarding agency. | 2 CFR 200 APPENDIX II (D) | Contractor RFP/IFB<br><br>Subrecipients |
| >$100,000 | Contract Work Hours and Safety Standards Act (40 U.S.C. 3701-3708). Where applicable, all contracts awarded by the Non-Federal entity in excess of $100,000 that involve the employment of mechanics or laborers must include a provision for compliance with 40 U.S.C. 3702 and 3704, as supplemented by Department of Labor regulations (29 CFR Part 5). Under 40 U.S.C. 3702 of the Act, each contractor must be required to compute the wages of every mechanic and laborer on the basis of a standard work week of 40 hours. Work in excess of the standard work week is permissible provided that the worker is compensated at a rate of not less than one and a half times the basic rate of pay for all hours worked in excess of 40 hours in the work week. The requirements of 40 U.S.C. 3704 are applicable to construction work and provide that no laborer or mechanic must be required to work in surroundings or under working conditions which are unsanitary, hazardous, or dangerous. These requirements do not apply to the purchases of supplies or materials or articles ordinarily available on the open market, or contracts for transportation or | 2 CFR 200 APPENDIX II (E) | Contractor RFP/IFB<br><br>Subrecipients |

| THRESHOLD | PROVISION | CITATION | PROVISION APPLIES TO |
|---|---|---|---|
| | transmission of intelligence. | | |
| None | Rights to Inventions Made Under a Contract or Agreement. If the Federal award meets the definition of "funding agreement" under 37 CFR § 401.2 (a) and the recipient or subrecipient wishes to enter into a contract with a small business firm or nonprofit organization regarding the substitution of parties, assignment or performance of experimental, developmental, or research work under that "funding agreement," the recipient or subrecipient must comply with the requirements of 37 CFR Part 401, "Rights to Inventions Made by Nonprofit Organizations and Small Business Firms Under Government Grants, Contracts and Cooperative Agreements," and any implementing regulations issued by the awarding agency. | 2 CFR 200 APPENDIX II (F) | Contractor RFP/IFB<br>Contractor RFQ<br>Subrecipients |
| >$150,000 | Clean Air Act (42 U.S.C. 7401-7671q.) and the Federal Water Pollution Control Act (33 U.S.C. 1251-1387), as amended – Contracts and subgrants of amounts in excess of $150,000 must contain a provision that requires the Non-Federal award to agree to comply with all applicable standards, orders or regulations issued pursuant to the Clean Air Act (42 U.S.C. 7401-7671q) and the Federal Water Pollution Control Act as amended (33 U.S.C. 1251-1387). Violations must be reported to the Federal awarding agency and the Regional Office of the Environmental Protection Agency (EPA). | 2 CFR 200 APPENDIX II (G) | Contractor RFP/IFB<br>Contractor RFQ<br>Subrecipients |
| >$25,000 | Debarment and Suspension (Executive Orders 12549 and 12689) – A contract award (see 2 CFR 180.220) must not be made to parties listed on the governmentwide exclusions in the System for Award Management (SAM), in accordance with the OMB guidelines at 2 CFR 180 that implement Executive Orders 12549 (3 CFR part 1986 Comp., p. 189) and 12689 (3 CFR part 1989 Comp., p. 235), "Debarment and Suspension." SAM Exclusions contains the names of parties debarred, suspended, or otherwise excluded by agencies, as well as parties declared ineligible under statutory or regulatory authority other than Executive Order 12549. | 2 CFR 200 APPENDIX II (H) | Contractor RFP/IFB<br>Contractor RFQ<br>Subrecipients<br>Vendors |
| >$100,000 | Byrd Anti-Lobbying Amendment (31 U.S.C. 1352) – Contractors that apply or bid for an award exceeding $100,000 must file the required certification. Each tier certifies to the tier above that it will not and has not used Federal appropriated funds to pay any person or organization for influencing or attempting to influence an officer or employee of any agency, a member of Congress, officer or employee of Congress, or an employee of a member of Congress in connection with obtaining any Federal contract, grant or any other award covered by 31 U.S.C. 1352. Each tier must also disclose any lobbying with Non-Federal funds that takes place in connection with obtaining any Federal award. Such disclosures are forwarded from tier to tier up to the Non-Federal award. | 2 CFR 200 APPENDIX II (I) and 24 CFR §570.303 | Contractor RFP/IFB<br>Contractor RFQ<br>Subrecipients |

| THRESHOLD | PROVISION | CITATION | PROVISION APPLIES TO |
|---|---|---|---|
| | See 2 CFR §200.323 - Procurement of Recovered Materials.<br><br>Where applicable, in the performance of contract, pursuant to 2 CFR 200.323, the contractor must comply with section 6002 of the Solid Waste Disposal Act, as amended by the Resource Conservation and Recovery Act. The requirements of Section 6002 include procuring only items designated in guidelines of the Environmental Protection Agency (EPA) at 40 CFR part 247 that contain the highest percentage of recovered materials practicable, consistent with maintaining a satisfactory level of competition, where the purchase price of the item exceeds $10,000 or the value of the quantity acquired during the preceding fiscal year exceeded $10,000; procuring solid waste management services in a manner that maximizes energy and resource recovery; and establishing an affirmative procurement program for procurement of recovered materials identified in the EPA guidelines.<br><br>To the extent that the scope of work or specifications in the contract requires the contractor to provide recovered materials the scope of work or specifications are modified to require that as follows.<br><br>ii. In the performance of this contract, the Contractor shall make maximum use of products containing recovered materials that are EPA-designated items unless the product cannot be acquired—<br>1. Competitively within a timeframe providing for compliance with the contract performance schedule;<br>2. Meeting contract performance requirements; or<br>3. At a reasonable price.<br>iv. Information about this requirement, along with the list of EPA-designated items, is available at EPA's Comprehensive Procurement Guidelines web site, https://www.epa.gov/smm/comprehensive-procurement-guideline-cpg-program.<br>v. The Contractor also agrees to comply with all other applicable requirements of Section 6002 of the "Solid Waste Disposal Act." | 2 CFR 200<br>APPENDIX II (J) | Contractor RFP/IFB<br>Contractor RFQ<br>Subrecipients |
| | See 2 CFR §200.216 - Prohibition on certain telecommunications and video surveillance services or equipment<br><br>(a) Recipients and subrecipients are prohibited from obligating or expending loan or grant funds to:<br>(1) Procure or obtain;<br>(2) Extend or renew a contract to procure or obtain; or<br>(3) Enter into a contract (or extend or renew a contract) to procure or obtain equipment, services, or systems that uses covered telecommunications equipment or services as a substantial or essential component of any system, or as critical technology as part of any system. As described in Public Law 115-232, section 889, covered telecommunications equipment is telecommunications equipment produced by Huawei Technologies Company or ZTE Corporation (or any subsidiary or affiliate of such entities).<br>(i) For the purpose of public safety, security of government facilities, physical security surveillance of critical infrastructure, and other national security purposes, video surveillance and telecommunications equipment produced by Hytera Communications Corporation, Hangzhou Hikvision Digital Technology Company, or Dahua Technology Company (or any subsidiary or affiliate of such entities).<br>(ii) Telecommunications or video surveillance services provided by such entities or using such equipment.<br>(iii) Telecommunications or video surveillance equipment or services produced or provided by an entity that the Secretary of Defense, in consultation with the Director of the National Intelligence or the Director of the Federal Bureau of Investigation, reasonably believes to be an entity owned or | 2 CFR 200<br>APPENDIX II (K) | Contractor RFP/IFB<br>Contractor RFQ<br>Subrecipients |

| THRESHOLD | PROVISION | CITATION | PROVISION APPLIES TO |
|---|---|---|---|
| | controlled by, or otherwise connected to, the government of a covered foreign country.<br>(b) In implementing the prohibition under Public Law 115-232, section 889, subsection (f), paragraph (1), heads of executive agencies administering loan, grant, or subsidy programs shall prioritize available funding and technical support to assist affected businesses, institutions and organizations as is reasonably necessary for those affected entities to transition from covered communications equipment and services, to procure replacement equipment and services, and to ensure that communications service to users and customers is sustained.<br>(c) See Public Law 115-232, section 889 for additional information.<br>(d) See also § 200.471. | | |
| | See 2 CFR §200.322 - Domestic Preferences for Procurements.<br><br>(a) As appropriate and to the extent consistent with law, the Non-Federal entity should, to the greatest extent practicable under a Federal award, provide a preference for the purchase, acquisition, or use of goods, products, or materials produced in the United States (including but not limited to iron, aluminum, steel, cement, and other manufactured products). The requirements of this section must be included in all subawards including all contracts and purchase orders for work or products under this award.<br><br>(b) For purposes of this section:<br>(1) "Produced in the United States" means, for iron and steel products, that all manufacturing processes, from the initial melting stage through the application of coatings, occurred in the United States.<br>(2) "Manufactured products" means items and construction materials composed in whole or in part of non-ferrous metals such as aluminum; plastics and polymer-based products such as polyvinyl chloride pipe; aggregates such as concrete; glass, including optical fiber; and lumber. | 2 CFR 200 APPENDIX II (L) | Contractor RFP/IFB<br>Contractor RFQ<br>Subrecipients |
| | **Additional 2 CFR 200 references & Other Regulations** | | |
| None | The Federal awarding agency must establish conflict of interest policies for Federal awards. The Non-Federal entity must disclose in writing any potential conflict of interest to the Federal awarding agency or pass-through entity in accordance with applicable Federal awarding agency policy. | 2 CFR 200.112 | Contractor RFP/IFB<br>Contractor RFQ<br>Subrecipients |
| None | Contracting with HUB, small and minority businesses, women's business enterprises, and labor surplus area firms.<br>(a) The Non-Federal entity must take all necessary affirmative steps to assure that minority businesses, women's business enterprises, and labor surplus area firms are used when possible.<br>(b) Affirmative steps must include:<br>(1) Placing qualified small and minority businesses and women's business enterprises on solicitation lists;<br>(2) Assuring that small and minority businesses, and women's business enterprises are solicited whenever they are potential sources;<br>(3) Dividing total requirements, when economically feasible, into smaller tasks or quantities to permit maximum participation by small and minority businesses, and women's business enterprises;<br>(4) Establishing delivery schedules, where the requirement permits, which | 2 CFR 200.321 | Contractor RFP/IFB<br>Contractor RFQ<br>Subrecipients |

| THRESHOLD | PROVISION | CITATION | PROVISION APPLIES TO |
|---|---|---|---|
| | encourage participation by small and minority businesses, and women's business enterprises;<br>(5) Using the services and assistance, as appropriate, of such organizations as the Small Business Administration and the Minority Business Development Agency of the Department of Commerce; and<br>(6) Requiring the prime contractor, if subcontracts are to be let, to take the affirmative steps listed in paragraphs (b)(1) through (5) of this section. | | |
| >$10,000 | An NFE (Non-Federal Entity) that is a state agency or an agency of a political subdivision of a state, and the NFE's contractors must comply with Section 6002 of the Solid Waste Disposal Act.<br>Applicable NFEs must include a contract provision requiring compliance with this requirement.<br>This includes contracts awarded by a state agency or political subdivision of a state and its contractors for certain items, as designated by the EPA, with a purchase price greater than $10,000.<br>Indian Tribal Governments and nonprofit organizations are not required to comply with this provision. Additional requirements are listed below. | 2 CFR 200.323 | Contractor RFP/IFB<br>Contractor RFQ<br>Subrecipients |
| None | Financial records, supporting documents, statistical records, and all other Non-Federal entity records pertinent to a Federal award must be retained for a period of three years from the date of submission of the final expenditure report or, for Federal awards that are renewed quarterly or annually, from the date of the submission of the quarterly or annual financial report, respectively, as reported to the Federal awarding agency or pass-through entity in the case of a subrecipient. Federal awarding agencies and pass-through entities must not impose any other record retention requirements upon Non-Federal entities. **All records related to ARPA shall be maintained for 5 years per the ARPA terms, conditions, and regulations.** The only exceptions are the following:<br>(a) If any litigation, claim, or audit is started before the expiration of the 3-year period, the records must be retained until all litigation, claims, or audit findings involving the records have been resolved and final action taken. **All records related to ARPA shall be maintained for 5 years per the ARPA terms, conditions, and regulations.**<br>(b) When the Non-Federal entity is notified in writing by the Federal awarding agency, cognizant agency for audit, oversight agency for audit, cognizant agency for indirect costs, or pass-through entity to extend the retention period.<br>(c) Records for real property and equipment acquired with Federal funds must be retained for 3 years after final disposition. All records related to ARPA shall be maintained for 5 years per the ARPA terms and conditions and regulations.<br>(d) When records are transferred to or maintained by the Federal awarding agency or pass-through entity, the 3-year retention requirement is not applicable to the Non-Federal entity All records related to ARPA shall be maintained for 5 years per the ARPA terms and conditions and regulations. **All records related to ARPA shall be maintained for 5 years per the ARPA terms, conditions, and regulations.**<br>(e) Records for program income transactions after the period of performance. In some cases, recipients must report program income after the period of performance. Where there is such a requirement, the retention period for the records pertaining to the earning of the program income starts from the end of the Non-Federal entity's fiscal year in which the program income is earned.<br>(f) Indirect cost rate proposals and cost allocations plans. This paragraph applies to the following types of documents and their supporting records: Indirect cost rate computations or proposals, cost allocation plans, and any similar accounting computations of the rate at which a particular group of costs is chargeable (such as computer usage chargeback rates or composite fringe benefit rates).<br>(1) *If submitted for negotiation.* If the proposal, plan, or other computation is | 2 CFR 200.334 | Contractor RFP/IFB<br>Contractor RFQ<br>Subrecipients<br>Vendors |

| THRESHOLD | PROVISION | CITATION | PROVISION APPLIES TO |
|---|---|---|---|
| | required to be submitted to the Federal Government (or to the pass-through entity) to form the basis for negotiation of the rate, then the 3-year retention period for its supporting records starts from the date of such submission. **All records related to ARPA shall be maintained for 5 years per the ARPA terms, conditions, and regulations.**<br>(2) *If not submitted for negotiation.* If the proposal, plan, or other computation is not required to be submitted to the Federal Government (or to the pass-through entity) for negotiation purposes, then the 3-year retention period for the proposal, plan, or computation and its supporting records starts from the end of the fiscal year (or other accounting period) covered by the proposal, plan, or other computation. **All records related to ARPA shall be maintained for 5 years per the ARPA terms, conditions, and regulations.** | | |
| None | The Federal awarding agency and the Non-Federal entity should, whenever practicable, collect, transmit, and store Federal award-related information in open and machine-readable formats rather than in closed formats or on paper in accordance with applicable legislative requirements. A machine-readable format is a format in a standard computer language (not English text) that can be read automatically by a web browser or computer system. The Federal awarding agency or pass-through entity must always provide or accept paper versions of Federal award-related information to and from the Non-Federal entity upon request. If paper copies are submitted, the Federal awarding agency or pass-through entity must not require more than an original and two copies. When original records are electronic and cannot be altered, there is no need to create and retain paper copies. When original records are paper, electronic versions may be substituted through the use of duplication or other forms of electronic media provided that they are subject to periodic quality control reviews, provide reasonable safeguards against alteration, and remain readable. | 2 CFR 200.336 | Contractor RFP/IFB<br>Contractor RFQ<br>Subrecipients |
| None | CONTRACTS WITH COMPANIES ENGAGED IN BUSINESS WITH IRAN, SUDAN, OR FOREIGN TERRORIST ORGANIZATION PROHIBITED. A governmental entity may not enter into a governmental contract with a company that is identified on a list prepared and maintained under Section 806.051, 807.051, or 2252.153. The term "foreign terrorist organization" in this paragraph has the meaning assigned to such a term in Section 2252.151(2) of the Texas Government Code. | Texas Government Code 2252.152 | Contractor RFP/IFB<br>Contractor RFQ<br>Subrecipients |
| >$100,000 | PROVISION REQUIRED IN CONTRACT.<br>(a) This section applies only to a contract that:<br>(1) is between a governmental entity and a company with 10 or more full-time employees; and<br>(2) has a value of $100,000 or more that is to be paid wholly or partly from public funds of the governmental entity.<br>(b) A governmental entity may not enter into a contract with a company for goods or services unless the contract contains a written verification from the company that it:<br>(1) does not boycott Israel; and<br>(2) will not boycott Israel during the term of the contract. | Texas Government Code 2271 | Contractor RFP/IFB<br>Contractor RFQ<br>Subrecipients<br>Vendors |
| For Critical Infrastructure Projects | PROHIBITION ON CONTRACTS WITH CERTAIN FOREIGN-OWNED COMPANIES IN CONNECTION WITH CRITICAL INFRASTRUCTURE.<br>PROHIBITED CONTRACTS.<br>(a) A governmental entity may not enter into a contract or other agreement relating to critical infrastructure in this state with a company:<br>(1) if, under the contract or other agreement, the company would be granted direct or remote access to or control of critical infrastructure in this state, excluding access specifically allowed by the governmental entity for product | Texas Government Code, Title 10, Subtitle F, Chapter 2274.0102 | Subrecipients<br>EC 6.1 Awardees |

| THRESHOLD | PROVISION | CITATION | PROVISION APPLIES TO |
|---|---|---|---|
| | warranty and support purposes; and<br>(2) if the governmental entity knows that the company is:<br>(A) owned by or the majority of stock or other ownership interest of the company is held or controlled by:<br>(i) individuals who are citizens of China, Iran, North Korea, Russia, or a designated country; or<br>(ii) a company or other entity, including a governmental entity, that is owned or controlled by citizens of or is directly controlled by the government of China, Iran, North Korea, Russia, or a designated country; or<br>(B) headquartered in China, Iran, North Korea, Russia, or a designated country.<br>(b) The prohibition described by Subsection (a) applies regardless of whether:<br>(1) the company's or its parent company's securities are publicly traded; or<br>(2) the company or its parent company is listed on a public stock exchange as:<br>(A) a Chinese, Iranian, North Korean, or Russian company; or<br>(B) a company of a designated country. | | |
| None | Mandatory standards and policies relating to energy efficiency which are contained in the state energy conservation plan issued in compliance with the Energy Policy and Conservation Act. | 42 U.S.C. 6201 | Contractor RFP/IFB<br>Subrecipients |
| None | The Firm agrees that no otherwise qualified individual with disabilities shall, solely by reason of his/her disability, be denied the benefits of, or be subjected to discrimination, including discrimination in employment, under any program or activity receiving federal financial assistance. | Section 504 of the Rehabilitation Act of 1973, as amended. | Subrecipients |
| | ARPA Terms & Conditions | | |
| ARPA Terms, Conditions, & Records | 1. Use of Funds.<br>a. Recipient understands and agrees that the funds disbursed under this award may only be used in compliance with section 603(c) of the Social Security Act (the Act), Treasury's regulations implementing that section, and guidance issued by Treasury regarding the foregoing.<br>b. Recipient will determine prior to engaging in any project using this assistance that it has the institutional, managerial, and financial capability to ensure proper planning, management, and completion of such project. | Section 9901 of the American Rescue Plan Act, Pub. L. No. 117-2;<br>Section 602(b), 603(b) and/or 603(c) as applicable | Subrecipients |
| ARPA Terms, Conditions, & Records | 2. Period of Performance. The period of performance for this award begins on the date hereof and ends on December 31, 2026. As set forth in Treasury's implementing regulations, Recipients may use award funds to cover eligible costs incurred during the period that begins on March 3, 2021, and ends on December 31, 2024. | Section 9901 of the American Rescue Plan Act, Pub. L. No. 117-2;<br>Section 602(b), 603(b) and/or 603(c) as applicable | Subrecipients |
| ARPA Terms, Conditions, & Records | 3. Reporting. Recipient agrees to comply with any reporting obligations established by Treasury as they relate to this award. | Section 9901 of the American Rescue Plan Act, Pub. L. No. 117-2;<br>Section 602(b), 603(b) and/or 603(c) as applicable | Subrecipients |

| THRESHOLD | PROVISION | CITATION | PROVISION APPLIES TO |
|---|---|---|---|
| ARPA Terms, Conditions, & Records | 4. Maintenance of and Access to Records<br>a. Recipient shall maintain records and financial documents sufficient to evidence compliance with section 603(c) of the Act, Treasury's regulations implementing that section, and guidance issued by Treasury regarding the foregoing.<br>b. The Treasury Office of Inspector General and the Government Accountability Office, or their authorized representatives, shall have the right of access to records (electronic and otherwise) of Recipient in order to conduct audits or other investigations.<br>c. Records shall be maintained by Recipient for a period of five (5) years after all funds have been expended or returned to Treasury, whichever is later. | Section 9901 of the American Rescue Plan Act, Pub. L. No. 117-2;<br>Section 602(b), 603(b) and/or 603(c) as applicable | Contractor RFP/IFB<br>Contractor RFQ<br>Subrecipients<br>Vendors |
| ARPA Terms, Conditions, & Records | 5. Pre-award Costs. Pre-award costs, as defined in 2 CFR § 200.458, may not be paid with funding from this award. | Section 9901 of the American Rescue Plan Act, Pub. L. No. 117-2;<br>Section 602(b), 603(b) and/or 603(c) as applicable | Subrecipients |
| ARPA Terms, Conditions, & Records | 6. Administrative Costs. Recipient may use funds provided under this award to cover both direct and indirect costs. | Section 9901 of the American Rescue Plan Act, Pub. L. No. 117-2;<br>Section 602(b), 603(b) and/or 603(c) as applicable | Subrecipients |
| ARPA Terms, Conditions, & Records | 7. Cost Sharing. Cost sharing or matching funds are not required to be provided by Recipient. | Section 9901 of the American Rescue Plan Act, Pub. L. No. 117-2;<br>Section 602(b), 603(b) and/or 603(c) as applicable | Subrecipients |
| ARPA Terms, Conditions, & Records | 8. Conflicts of Interest. Recipient understands and agrees it must maintain a conflict of interest policy consistent with 2 CFR § 200.318(c) and that such conflict of interest policy is applicable to each activity funded under this award. Recipient and subrecipients must disclose in writing to Treasury or the pass-through entity, as appropriate, any potential conflict of interest affecting the awarded funds in accordance with 2 CFR § 200.112. | Section 9901 of the American Rescue Plan Act, Pub. L. No. 117-2;<br>Section 602(b), 603(b) and/or 603(c) as applicable | Contractor RFP/IFB<br>Contractor RFQ<br>Subrecipients<br>Vendors |
| ARPA Terms, Conditions, & Records | 9. Compliance with Applicable Law and Regulations.<br>a. Recipient agrees to comply with the requirements of section 603 of the Act, regulations adopted by Treasury pursuant to section 603(f) of the Act, and guidance issued by Treasury regarding the foregoing. Recipient also agrees to comply with all other applicable federal statutes, regulations, and executive orders, and Recipient shall provide for such compliance by other parties in any agreements it enters into with other parties relating to this award.<br>b. Federal regulations applicable to this award include, without limitation, the following:<br>i. Uniform Administrative Requirements, Cost Principles, and Audit Requirements for Federal Awards, 2 CFR Part 200, other than such provisions as Treasury may determine are inapplicable to this Award and subject to such exceptions as may be otherwise provided by Treasury. Subpart F – Audit Requirements of the Uniform Guidance, implementing the Single Audit Act, shall apply to this award.<br>ii. Universal Identifier and System for Award Management (SAM), 2 CFR Part 25, pursuant to which the award term set forth in Appendix A to 2 CFR Part 25 is hereby incorporated by reference. | Section 9901 of the American Rescue Plan Act, Pub. L. No. 117-2;<br>Section 602(b), 603(b) and/or 603(c) as applicable | Contractor RFP/IFB<br>Contractor RFQ<br>Subrecipients<br>Vendors |

| THRESHOLD | PROVISION | CITATION | PROVISION APPLIES TO |
|---|---|---|---|
| | iii. Reporting Subaward and Executive Compensation Information, 2 CFR Part 170, pursuant to which the award term set forth in Appendix A to 2 CFR Part 170 is hereby incorporated by reference.<br>iv. OMB Guidelines to Agencies on Governmentwide Debarment and Suspension (Non-procurement), 2 CFR Part 180, including the requirement to include a term or condition in all lower tier covered transactions (contracts and subcontracts described in 2 CFR Part 180, subpart B) that the award is subject to 2 CFR Part 180 and Treasury's implementing regulation at 31 CFR Part 19.<br>v. Recipient Integrity and Performance Matters, pursuant to which the award term set forth in 2 CFR Part 200, Appendix XII to Part 200 is hereby incorporated by reference.<br>vi. Governmentwide Requirements for Drug-Free Workplace, 31 CFR Part 20. (Subrecipient Only)<br>vii. New Restrictions on Lobbying, 31 CFR Part 21.<br>viii. Uniform Relocation Assistance and Real Property Acquisitions Act of 1970 (42 U.S.C. §§ 4601-4655) and implementing regulations.<br>ix. Generally applicable federal environmental laws and regulations.<br><br>c. Statutes and regulations prohibiting discrimination applicable to this award include, without limitation, the following:<br>i. Title VI of the Civil Rights Act of 1964 (42 U.S.C. §§ 2000d et seq.) and Treasury's implementing regulations at 31 CFR Part 22, which prohibit discrimination on the basis of race, color, or national origin under programs or activities receiving federal financial assistance;<br>ii. The Fair Housing Act, Title VIII of the Civil Rights Act of 1968 (42 U.S.C. §§ 3601 et seq.), which prohibits discrimination in housing on the basis of race, color, religion, national origin, sex, familial status, or disability;<br>iii. Section 504 of the Rehabilitation Act of 1973, as amended (29 U.S.C. § 794), which prohibits discrimination on the basis of disability under any program or activity receiving federal financial assistance;<br>iv. The Age Discrimination Act of 1975, as amended (42 U.S.C. §§ 6101 et seq.), and Treasury's implementing regulations at 31 CFR Part 23, which prohibit discrimination on the basis of age in programs or activities receiving federal financial assistance; and<br>v. Title II of the Americans with Disabilities Act of 1990, as amended (42 U.S.C. §§ 12101 et seq.), which prohibits discrimination on the basis of disability under programs, activities, and services provided or made available by state and local governments or instrumentalities or agencies thereto. | | |
| ARPA Terms, Conditions, & Records | 10. Remedial Actions. In the event of Recipient's noncompliance with section 603 of the Act, other applicable laws, Treasury's implementing regulations, guidance, or any reporting or other program requirements, Treasury may impose additional conditions on the receipt of a subsequent tranche of future award funds, if any, or take other available remedies as set forth in 2 CFR § 200.339. In the case of a violation of section 603(c) of the Act regarding the use of funds, previous payments shall be subject to recoupment as provided in section 603(e) of the Act. | Section 9901 of the American Rescue Plan Act, Pub. L. No. 117-2;<br>Section 602(b), 603(b) and/or 603(c) as applicable | Subrecipients |
| ARPA Terms, Conditions, & Records | 11. Hatch Act. Recipient agrees to comply, as applicable, with requirements of the Hatch Act (5 U.S.C. §§ 1501-1508 and 7324-7328), which limit certain political activities of State or local government employees whose principal employment is in connection with an activity financed in whole or in part by this federal assistance. | Section 9901 of the American Rescue Plan Act, Pub. L. No. 117-2;<br>Section 602(b), 603(b) and/or 603(c) as applicable | Subrecipients |
| ARPA Terms, Conditions, & Records | 12. False Statements. Recipient understands that making false statements or claims in connection with this award is a violation of federal law and may result in criminal, civil, or administrative sanctions, including fines, imprisonment, civil damages and penalties, debarment from participating in federal awards or contracts, and/or any | Section 9901 of the American Rescue Plan Act, Pub. L. No. 117-2;<br>Section 602(b), | Contractor RFP/IFB<br>Contractor RFQ<br>Subrecipients<br>Vendors |

| THRESHOLD | PROVISION | CITATION | PROVISION APPLIES TO |
|---|---|---|---|
| | other remedy available by law. | 603(b) and/or 603(c) as applicable | |
| ARPA Terms, Conditions, & Records | 13. Publications. Any publications produced with funds from this award must display the following language: "This project [is being] [was] supported, in whole or in part, by federal award number [enter project FAIN] awarded to [name of Recipient] by the U.S. Department of the Treasury." | Section 9901 of the American Rescue Plan Act, Pub. L. No. 117-2; Section 602(b), 603(b) and/or 603(c) as applicable | Subrecipients |
| ARPA Terms, Conditions, & Records | 14. Debts Owed the Federal Government.<br>a. Any funds paid to Recipient (1) in excess of the amount to which Recipient is finally determined to be authorized to retain under the terms of this award; (2) that are determined by the Treasury Office of Inspector General to have been misused; or (3) that are determined by Treasury to be subject to a repayment obligation pursuant to section 603(e) of the Act and have not been repaid by Recipient shall constitute a debt to the federal government.<br>b. Any debts determined to be owed the federal government must be paid promptly by Recipient. A debt is delinquent if it has not been paid by the date specified in Treasury's initial written demand for payment, unless other satisfactory arrangements have been made or if the Recipient knowingly or improperly retains funds that are a debt as defined in paragraph 14(a). Treasury will take any actions available to it to collect such a debt. | Section 9901 of the American Rescue Plan Act, Pub. L. No. 117-2; Section 602(b), 603(b) and/or 603(c) as applicable | Subrecipients |
| ARPA Terms, Conditions, & Records | 15. Disclaimer.<br>a. The United States expressly disclaims any and all responsibility or liability to Recipient or third persons for the actions of Recipient or third persons resulting in death, bodily injury, property damages, or any other losses resulting in any way from the performance of this award or any other losses resulting in any way from the performance of this award or any contract, or subcontract under this award.<br>b. The acceptance of this award by Recipient does not in any way establish an agency relationship between the United States and Recipient. | Section 9901 of the American Rescue Plan Act, Pub. L. No. 117-2; Section 602(b), 603(b) and/or 603(c) as applicable | Subrecipients |
| ARPA Terms, Conditions, & Records | 16. Protections for Whistleblowers.<br>c. In accordance with 41 U.S.C. § 4712, Recipient may not discharge, demote, or otherwise discriminate against an employee in reprisal for disclosing to any of the list of persons or entities provided below, information that the employee reasonably believes is evidence of gross mismanagement of a federal contract or grant, a gross waste of federal funds, an abuse of authority relating to a federal contract or grant, a substantial and specific danger to public health or safety, or a violation of law, rule, or regulation related to a federal contract (including the competition for or negotiation of a contract) or grant.<br>d. The list of persons and entities referenced in the paragraph above includes the following:<br>i. A member of Congress or a representative of a committee of Congress;<br>ii. An Inspector General;<br>iii. The Government Accountability Office;<br>iv. A Treasury employee responsible for contract or grant oversight or management;<br>v. An authorized official of the Department of Justice or other law enforcement agency;<br>vi. A court or grand jury; or<br>vii. A management official or other employee of Recipient, contractor, or subcontractor who has the responsibility to investigate, discover, or address misconduct.<br>c. Recipient shall inform its employees in writing of the rights and remedies provided | Section 9901 of the American Rescue Plan Act, Pub. L. No. 117-2; Section 602(b), 603(b) and/or 603(c) as applicable | Contractor RFP/IFB<br>Contractor RFQ<br>Subrecipients<br>Vendors |

| THRESHOLD | PROVISION | CITATION | PROVISION APPLIES TO |
|---|---|---|---|
| | under this section, in the predominant native language of the workforce. | | |
| ARPA Terms, Conditions, & Records | 17. Increasing Seat Belt Use in the United States. Pursuant to Executive Order 13043, 62 FR 19217 (Apr. 18, 1997), Recipient should encourage its contractors to adopt and enforce on-the-job seat belt policies and programs for their employees when operating company-owned, rented or personally owned vehicles. | Section 9901 of the American Rescue Plan Act, Pub. L. No. 117-2; Section 602(b), 603(b) and/or 603(c) as applicable | Contractor RFP/IFB<br>Contractor RFQ<br>Subrecipients<br>Vendors |
| ARPA Terms, Conditions, & Records | 18. Reducing Text Messaging While Driving. Pursuant to Executive Order 13513, 74 FR 51225 (Oct. 6, 2009), Recipient should encourage its employees, subrecipients, and contractors to adopt and enforce policies that ban text messaging while driving, and Recipient should establish workplace safety policies to decrease accidents caused by distracted drivers | Section 9901 of the American Rescue Plan Act, Pub. L. No. 117-2; Section 602(b), 603(b) and/or 603(c) as applicable | Contractor RFP/IFB<br>Contractor RFQ<br>Subrecipients<br>Vendors |

## Exhibit C – Other Related Information

To be inserted

## Exhibit D – Insurance Certificate

To be inserted

## Exhibit E – Bid, Performance, and Payment Bonds

To be inserted

## Exhibit F – Eligibility Verification (SAM.gov)

Vendor to provide a dated printout of their active status without exclusions from SAM.gov website

## Exhibit G – Certificate of Interested Parties (Form 1295)

Form 1295 (Certificate of Interested Parties) must be completed on the Texas Ethics Commission's website as part of this project prior to contract execution. Form 1295 can be accessed here: https://www.ethics.state.tx.us/filinginfo/1295/ and must be returned with the certification number assigned after completion

# Addendum - 2
# 10/30/2024
# IFB-24-16 Pothole Patching Trailer

**BIDS WILL BE OPENED AND READ ALOUD:**

Thursday, October 31, 2024, at 11:00 AM  1109-B Bayou

Road La Marque, TX 77568

# BID OPENING SHEET

**Contract:** LM 24-16

**Project:** Pothole Patching Trailer

**Bid Date:** October 31, 2024 at 11:00 A.M. in the City Council Chamber Room, 1109-B Bayou Road, La Marque, Texas, 77573

| | | | |
|---|---|---|---|
| **Bidder # 1:** | R.B. Everett & Co. | **Bid Amt:** | $100,006.00 |
| **Bidder # 2:** | Monmouth | **Bid Amt:** | $ 144,499.00 |
| **Bidder # 3:** | | **Bid Amt:** | |
| **Bidder # 4:** | | **Bid Amt:** | |
| **Bidder # 5:** | | **Bid Amt:** | |
| **Bidder # 6:** | | **Bid Amt:** | |
| **Bidder # 7:** | | **Bid Amt:** | |
| **Bidder # 8:** | | **Bid Amt:** | |
| **Bidder # 9:** | | **Bid Amt:** | |
| **Bidder # 10:** | | **Bid Amt:** | |

**Bids Opened and Read By:** Amanda Dobby 10.31.24

**Bids Recorded and Witnessed By:** Kasey C. Lott



**BID TABULATION**
**LM 24-16**
**Pothole Patching Trailer**

| Bidder | Bid Complete (Yes/No) | Amount |
|---|---|---|
| R B Everett | Yes | 100,000.00 |
| Monmouth | | 144.499.00 |
| | | |
| | | |
| | | |
| | | |
| | | |
| | | |
| | | |
| | | |
| | | |
| | | |
| | | |
| | | |
| | | |
| | | |
| | | |
| | | |
| | | |
| | | |
| | | |
| | | |
| | | |
| | | |
| | | |
| | | |
| | | |

**RATING SHEET – REQUEST FOR PROPOSALS (RFP)**
**COMPETITIVE PROCUREMENT FOR GENERAL SERVICES, SUPPLIES, AND/OR EQUIPMENT**

| | |
|---|---|
| Entity Name: | City of La Marque |
| IFB Title or Number: | Trailer Mounted Pothole Patcher |
| Source of Funds: | American Rescue Plan Act (ARPA) (list others) |
| Evaluator's Name: | Amanda Hobby |
| Name of Respondent: | Monmouth Solutions |
| Date of Rating: | November 4, 2024 |

Each evaluation committee member shall independently assess the content of each response using only the evaluation criteria and weights published in the solicitation and award points up to the maximum listed for each factor. Information necessary to assess the Respondent on these criteria may be gathered from past experience with the Respondent, from the Respondent's proposal response, and/or by contacting past/current clients (references) of the Respondent. Respondents proposing to offer specific services (if allowed in IFB) should be scored only on those services. Rate Respondent in the following areas:

**Pass/Fail Criteria**

| | Factor | Pass | Fail | Comments |
|---|---|---|---|---|
| 1. | Responsiveness of Proposal | ✓ | | |
| 2. | Financial Stability | ✓ | | |
| **Must pass all above areas to proceed. If a Fail is marked, stop here.** | | | | |

**Total Score (A + B + C)**

| | Factor | Maximum Points | Score | Comments |
|---|---|---|---|---|
| A. | **Understanding of Work, Experience, and Relevant Qualifications** – Experience in services similar in size and scope; total number and types of employees, skills, knowledge and abilities, company background history, number of years in providing similar services. | 20 | 20 | |
| B. | **Capacity to Perform and Delivery/Service Schedule** – Demonstrated capacity to provide goods or services within the prescribed delivery date and time. Provided references should be considered in this evaluation. | 20 | 5 | |
| C. | **Pricing** – Prices for all goods and/or services shall be all inclusive and valid for 90 days. | 60 | 60 | |
| | **TOTAL AVAILABLE POINTS** | **100** | 85 | |

**RATING SHEET – REQUEST FOR PROPOSALS (RFP)**
**COMPETITIVE PROCUREMENT FOR GENERAL SERVICES, SUPPLIES, AND/OR EQUIPMENT**

| | |
|---|---|
| Entity Name: | Monmouth Solutions |
| IFB Title or Number: | |
| Source of Funds: | American Rescue Plan Act (ARPA) (list others) |
| Evaluator's Name: | Christine Tumer |
| Name of Respondent: | Anthony Farell |
| Date of Rating: | 11-4-2024 |

Each evaluation committee member shall independently assess the content of each response using only the evaluation criteria and weights published in the solicitation and award points up to the maximum listed for each factor. Information necessary to assess the Respondent on these criteria may be gathered from past experience with the Respondent, from the Respondent's proposal response, and/or by contacting past/current clients (references) of the Respondent. Respondents proposing to offer specific services (if allowed in IFB) should be scored only on those services. Rate Respondent in the following areas:

**Pass/Fail Criteria**

| | Factor | Pass | Fail | Comments |
|---|---|---|---|---|
| 1. | Responsiveness of Proposal | ✓ | | |
| 2. | Financial Stability | ✓ | | |
| **Must pass all above areas to proceed. If a Fail is marked, stop here.** | | | | |

**Total Score (A + B + C)**

| | Factor | Maximum Points | Score | Comments |
|---|---|---|---|---|
| A. | **Understanding of Work, Experience, and Relevant Qualifications** – Experience in services similar in size and scope; total number and types of employees, skills, knowledge and abilities, company background history, number of years in providing similar services. | 20 | 20 | |
| B. | **Capacity to Perform and Delivery/Service Schedule** – Demonstrated capacity to provide goods or services within the prescribed delivery date and time. Provided references should be considered in this evaluation. | 20 | 20 | |
| C. | **Pricing** – Prices for all goods and/or services shall be all inclusive and valid for 90 days. | 60 | 60 | |
| | **TOTAL AVAILABLE POINTS** | **100** | 100 | |

MONMOUTH SOLUTIONS INC.

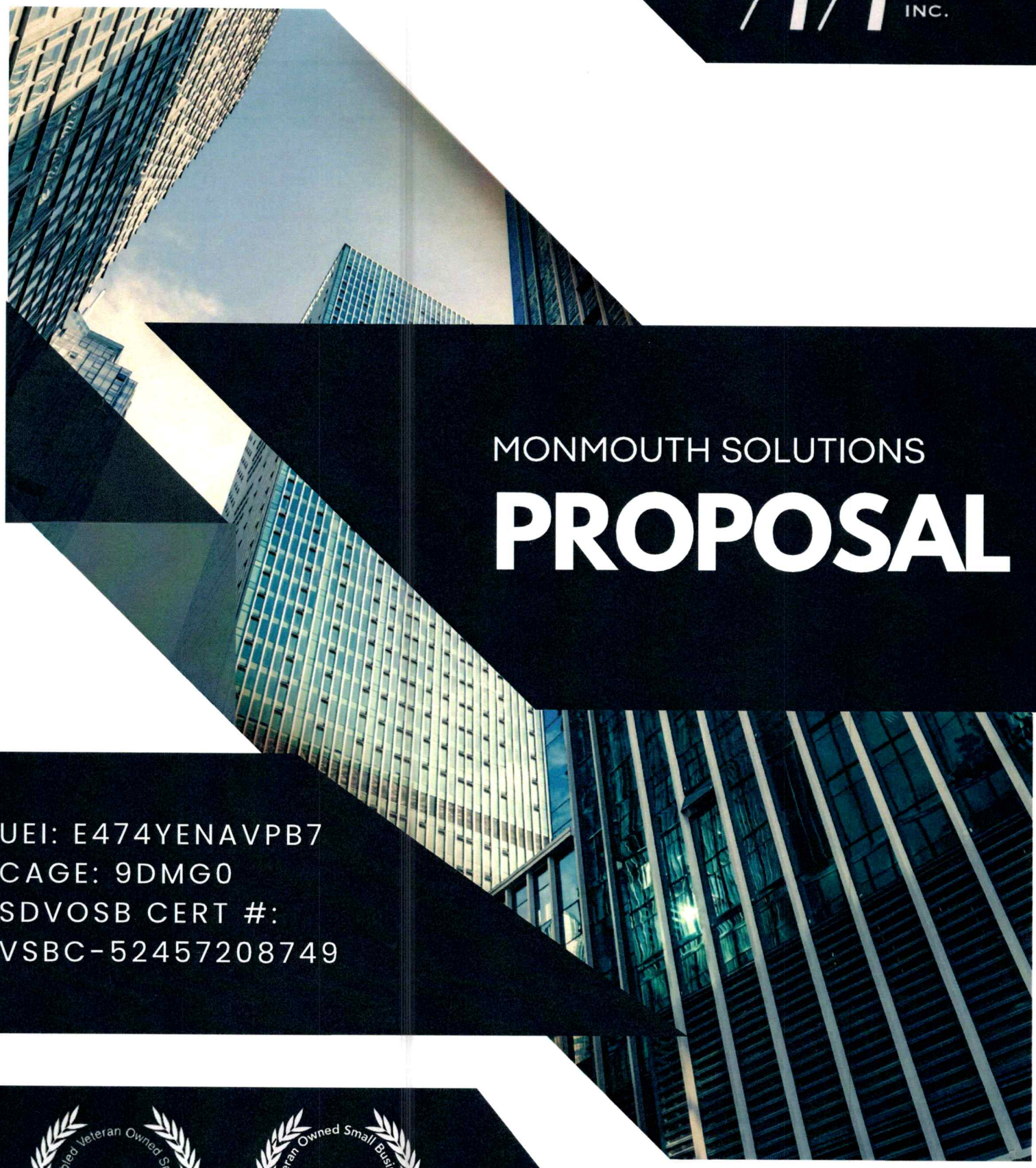

MONMOUTH SOLUTIONS

# PROPOSAL

UEI: E474YENAVPB7
CAGE: 9DMG0
SDVOSB CERT #:
VSBC-52457208749

Service Disabled Veteran Owned Small Business
SDVOSB
CVE

Veteran Owned Small Business
VOSB
V.A.
VERIFIED
CVE

# About Us

Monmouth Solutions, Inc is a Service-Disabled Veteran Owned Small Business that was formed in 2022 with a focus on logistical coordination, metal/steel manufacturing, equipment rentals, trailer and vehicle sales, and much more. As a veteran owned business, we know firsthand how important it is for vendors to offer efficient and effective products and services to the government. The founders of Monmouth consist of industry leaders with almost a century of combined experience. Using our diverse team of experts, we have been able to successfully complete over 100 contracts for state, local, and federal government agencies since inception.

# Core Competencies

## Equipment Lease

- Heavy Equipment
- Material Handling
- Rental Vehicles
- Mobile Structures

## Trailer Manufacturing

- Travel Trailers
- Command/Hazmat Trailers
- Pressure Washer/Sprayer Trailers
- Dump, Flatbed, Gooseneck, Enclosed, ETC

## Disaster Relief

- Rapid Deployment
- Logistical Support
- Product Sourcing

## Lodging & Travel

- Hotel Sourcing
- Transportation Solutions
- Charters

## Equipment & Vehicle Sales

- Computer and IT Parts and Services
- Recreational Vehicles
- Heavy Equipment

# NAICS

**336212** Truck Trailer Manufacturing
**532412** Construction, Mining, and Forestry Machinery and Equipment Rental and Leasing
**532490** Other Commercial and Industrial Machinery and Equipment Rental and Leasing
**335311** Power, Distribution, and Specialty Transformer Manufacturing
**336214** Travel Trailer and Camper Manufacturing
**532111** Passenger Car Rental
**441210** Recreational Vehicle Dealers
**332439** Other Metal Container Manufacturing
**334111** Electronic Computer Manufacturing
**333924** Industrial Truck, Tractor, Trailer, and Stacker Machinery Manufacturing
**811310** Commercial and Industrial Machinery and Equipment (Except Automotive and Electronic) Repair and Maintenance
**336211** Motor Vehicle Body Manufacturing
**333120** Construction Machinery Manufacturing
**333310** Commercial and Service Industry Machinery Manufacturing
**721110** Hotels (except Casino Hotels)
**337000** Furniture and Related Product Manufacturing.

**Company Overview:**

Monmouth Solutions, Inc. stands as a beacon of reliability and innovation in the government procurement sector. Our core values of integrity, efficiency, and customer satisfaction drive every facet of our operations. As a certified SDVOSB, we take pride in our ability to provide exceptional solutions while simultaneously fostering opportunities for veterans in the workforce.

**Key Strengths:**

Strategic Partnerships: We have cultivated strong relationships with suppliers globally, enabling us to procure the highest quality equipment and services for our clients.

**Nationwide Coverage:** With strategic locations and a robust fleet, we offer unparalleled coverage and rapid response times, ensuring timely delivery and service.

**Veteran-Led Expertise:** Our leadership team, comprised of veterans, brings a wealth of experience and dedication to every project we undertake.

**Commitment to Excellence:** We adhere to the highest standards of quality control and service delivery, ensuring that every client receives nothing but the best.

**Services Offered:**

**Equipment Procurement:** We specialize in sourcing a wide range of equipment, from technology to machinery, tailored to meet the specific needs of government agencies.

**Logistics and Delivery:** Leveraging our extensive fleet and logistics expertise, we provide efficient and reliable delivery services to ensure timely fulfillment of orders.

**Consulting and Support:** Our team of experts offers comprehensive consulting services, guiding clients through the procurement process and providing ongoing support to ensure optimal performance of acquired assets.

## Contract Specific Company Data

**Monmouth Solutions, Inc. offers comprehensive trailer sales tailored to the specific needs of government agencies. Our strategic locations across the country and extensive fleet ensure rapid deployment and reliable support for all trailer requirements.**

**Key Strengths:**

**Diverse Inventory: We provide access to a comprehensive inventory of trailers, including pothole patching, landscape, cargo, water trailers and more, sourced from trusted suppliers & industry leaders worldwide. We currently have this unit in stock.**

**Quality Assurance: All our trailers undergo rigorous inspection to ensure they meet the highest standards of quality and durability, providing long-lasting performance in demanding environments.**

**Tailored Solutions: Our team works closely with government agencies to understand their specific needs and recommend the most suitable trailers for their applications, ensuring optimal performance and efficiency.**

**Customer Support: From consultation to after-sales support, our dedicated team is committed to providing exceptional service and assistance at every stage of the purchasing process.**

# SPECIFICATIONS AND TECHNICAL DATA

## DuraPatcher P2 Trailer




* Easy 4 Step Process
* Low Maintenance
* Ergonomic No-Stress Boom
* Vent-Flo Nozzle

**The Spray Patching Process** - The spray patcher removes the pothole in one quick and cost effective 4 step process.

1. Clean the area with compressed air.
2. Apply an emulsion tack coat.
3. Fill the hole with coated aggregate.
4. Cover with dry aggregate so traffic can resume immediately.

**Low Maintenance / Hi-Performance**

The DuraPatcher air-driven system utilizes virtually no moving parts in the delivery system. No augers, conveyors or other wear parts are required making it the most reliable in the industry. Aggregate is gravity fed from the tow vehicle completing the worry-free package. The system ll deliver aggregate up to 2.5 inches in diameter without plugging or adjustment.

**Ergonomic No-Stress Boom**

The 3 piece boom design provides the ultimate in support for the operator moving the delivery hose. The boom / slide system easily moves throughout the entire 18 foot work zone.

**Vent-Flo Nozzle**

The specially designed Vent-Flo nozzle properly coats the aggregate with the right amount of emulsion regardless of aggregate size. The mix is applied at an angle to the repair allowing maximum placement and best operator safety. The vent holes diffuse / slowdown the air stream to minimize rock overspray and maximize placement into the repair.

**Heated Emulsion Tank**

The emulsion tank provides enough product to apply over 10 tons of patch before refilling. The heating blankets allow the patcher to be plugged in to keep emulsion at a "ready to go" temperature.

| QUANTITY | DESCRIPTION |
|---|---|
| 1 | 301529, New 2024 DuraPatcher P2 Trailer Patcher |
| 1 | 408845, Tank Content Gauge |
| 1 | Freight |

UEI: E474YENAVPB7
CAGE: 9DMG0
SDVOSB CERT #: VSBC-52457208749

MONMOUTH SOLUTIONS INC.

Monmouth Solutions

# PROPOSAL

## Pothole Patching Trailer

### SOLICITATION # LM 24-16

**Monmouth Solutions will provide and deliver one (1) new 2024 DuraPatcher P2 Trailer that meets the attached specifications to La Marque, TX.**

**Please refer to Specifications and Technical Data below.**

UEI: E474YENAVPB7
CAGE: 9DMG0
SDVOSB CERT #: VSBC-52457208749

MONMOUTH SOLUTIONS INC.

Monmouth Solutions

# PAST PERFORMANCE: TRAILERS

LIST INCLUDES NOTABLE CONTRACTS AND MONMOUTH'S PAST PERFORMANCE IS NOT LIMTED TO THIS LIST.

## CONTRACT #W911S223P0383

US ARMY

(45) TANDEM AXLE TRAILERS

VALUE: $214,188.50

DATE: JUNE 2023

POC: STEVEN.J.MANN.CIV@ARMY.MIL

## CONTRACT #RFB FY2023 #308

IOWA DOT

(19) ENCLOSED TRAILERS

VALUE: $171,281.00

DATE: JUNE 2023

POC: JULIE.RANDALL@IOWADOT.US

## CONTRACT #EV00012227

BOSTON FIRE DEPT.

(3) CAMPER TRAILERS

$193,260.00

DATE: AUGUST 2023

POC: CHRISTOPHER.RADCLIFFE@BOSTON.GOV

UEI: E474YENAVPB7
CAGE: 9DMG0
SDVOSB CERT #: VSBC-52457208749

MONMOUTH SOLUTIONS INC.

# MONMOUTH SOLUTIONS, INC.

## SIMILAR PAST PERFORMANCE RECORD

**UEI:** E474YENAVPB7 | **CAGE:** 9DMG0 | **EIN:** 92-0527019 |
**SDVOSB:** VSBC-52457208749

Reference 1:

What: (43) Enclosed Trailers - Delivered (Several Army Bases)

Who: United States of America - Department of Defense

When: 05/19/2023

Value: $214,188.50

POC: Steven Mann – (502) 626-2098 – steven.j.mann.civ@army.mil

Reference 2:

What: (1) Pressure Washer Trailer - Delivered

Who: Department of Natural Resources – State of Michigan

When: 06/20/2023

Value: $26,989.00

POC: Christina Baugher – (517) 388-6265 – baugherc@michigan.gov

Reference 3:

What: (1) Power Washing Trailer - Delivered

Who: City of Columbus, Ohio

When: 09/05/2023

Value: $23,989.00

POC: Matt Laroche – N/A – mlaroche@columbus.gov

Reference 4:

What: (1) Trailer-Mounted Pressure Washer – Delivered

Who: Lackland Air Force Base, TX

When: 08/25/2023

Value: $18,799.00

POC: Chryslin Vina – (210) 671-2654 – chryslin.vina.1@us.af.mil

Reference 5:

What: (5) Pressure Washer Trailers – Delivered

Who: City of Miami Beach, FL

When: in progress

Value: $77,395.00

POC: Charlie Arias – (305) 673-7641 – carlosarias@miamibeachfl.gov

Reference 6:

What: **(57) Various Rental Vehicles - Delivered**

Who: **Anderson Air Force Base, Guam**

When: **07/02/2023**

Value: **$159,540.00**

POC: **Capt. Charles Wilson – (573) 239-3481 –** Charles.wilson.43@us.af.mil

From: **Baugher, Christina (DNR)** <BaugherC@michigan.gov>
Date: Wed, Jun 21, 2023 at 2:11 PM
Subject: RE: MI Dept. of Natural Resources Order: PO 23-7225 Monmouth Solutions Inc - MI DNR Trailer-mounted Hot Water Power Washer for Boat Cleaning
To: Avendt, Patrick (DNR) <avendtp@michigan.gov>, John Mercuri <jj@monmouthsolutions.com>
Cc: Hutchins, Roland (DNR) <HutchinsR@michigan.gov>, Willis, Tricia (DNR) <WillisT@michigan.gov>

John,

You sent us a beautiful trailer and we are excited to start using it this weekend at events! We had our call with Jim – that was very helpful and he gave some good advice and tips. Thank you so much for your attention to detail and prompt delivery. I daresay this is a significantly nicer unit than others that the state owns 😉

I will definitely reach out if we have any other big purchases in the future.

Christina










MONMOUTH SOLUTIONS INC.

U.S. Small Business Administration

202-205-8800 | sba.gov
409 3rd St, SW. Washington DC 20416

March 14, 2023

MONMOUTH SOLUTIONS, INC
SAM UEI: E474YENAVPB7
93 BUTMAN RD
LOWELL, MA 01852

Dear MONMOUTH SOLUTIONS, INC:

I am writing to inform you that MONMOUTH SOLUTIONS, INC has been certified by the Veteran Small Business Certification Program (VetCert) at SBA. Your certification confirms your eligibility to compete for set-aside contracting opportunities, as well as other benefits, as a Service-Disabled Veteran-Owned Small Business (SDVOSB).

**What you need to know:**

- MONMOUTH SOLUTIONS, INC is certified as a Service-Disabled Veteran-Owned Small Business (SDVOSB) and publicly listed at veterans.certify.sba.gov.
- Your certification is valid for three (3) years from the date of this letter.
- You may visit SBA's website to download SBA-approved digital icons that indicate your certification status.
- SBA may conduct a program examination at your office or work site during your certification period to verify the accuracy of your certification.
- You may apply for recertification 120 days prior to your expiration date by logging in to your Veteran Small Business Certification profile.

**What to do if your business changes:**

You must inform SBA of any changes to the business that could affect its eligibility for the program, such as:

- a closure
- a change to the firm's ownership, business structure, or control
- filing of a bankruptcy
- a change in a Veteran-owner's active duty status

You can inform SBA of changes through the VetCert website at veterans.certify.sba.gov. Failure to report eligibility changes within 30 days of the change could result in:

- Civil and criminal penalties
- A referral to the Debarment and Suspension Committee
- Decertification and removal from the Veteran Small Business Certification Program

Please keep a copy of this letter to confirm MONMOUTH SOLUTIONS, INC's continued program eligibility. Thank you for your service to our country and for continuing to serve the United States through small business ownership.

Sincerely,

John B. Perkins

John B. Perkins
Director Veteran Small Business Certification Program

*All SBA programs and services are extended to the public on a nondiscriminatory basis.*

MONMOUTH SOLUTIONS INC.

# QUOTATION

**Monmouth Solutions, Inc**
**CAGE: 9DMG0**
**UEI: E474YENAVPB7**
93 Butman Road
Lowell, MA 01852

Voice: (978) 735-3855

| Quoted To: |
|---|
| La Marque, TX |

| Customer ID | Good Thru | Payment Terms | Sales Rep |
|---|---|---|---|
| TX | 01/31/24 | Net 30 Days | Anthony Farelli |

| Quantity | Item | Description | Unit Price | Amount |
|---|---|---|---|---|
| 1 | 2024 DuraPatcher P2 Trailer | Provide and deliver one (1) 2024 DuraPatcher P2 Trailer<br><br>ESTIMATED LEAD TIME:<br>30-90 DAYS ARO | $144,499.00 | $144,499.00 |
| | | | Subtotal | $144,499.00 |
| | | | Sales Tax | |
| | | | TOTAL | $144,499.00 |

# City of La Marque

1111 Bayou Road
La Marque, Texas 77568

## REQUEST FOR PROPOSALS (RFP)
## COMPETITIVE PROCUREMENT FOR
## GENERAL SERVICES, SUPPLIES, AND/OR EQUIPMENT

This RFP is being supported

by federal award number [RCP-056096]

allocated to the

## City of La Marque

under the

**American Rescue Plan Act (ARPA)**

**Coronavirus State and Local Fiscal Recovery Funds (SLFRF)**

**by the U.S. Department of the Treasury**

**Prepared By: Department of Public Works**

## Procurement Reference #2467

# American Rescue Plan Act (ARPA)
# Request for Proposals (RFP)

Date: October 1, 2024

Re: Request for Proposals (RFP) for Trailer Mounted Pothole Patcher with DuraPatcher Technology funded with Coronavirus State and Local Fiscal Recovery Funds (SLFRF) Allocated Under the American Rescue Plan Act (ARPA)

Dear Vendor:

The City of La Marque, hereinafter called "Entity", has received an allocation of American Rescue Plan Act (ARPA) funds, and is issuing a Request for Proposals (RFP) for a general purchases and supplies contract. The item(s) are being solicited to assist the Entity in completing and implementing programs and/or projects funded with its allocation of ARPA funds.

The Sole Point of Contact for this solicitation may provide information regarding this RFP. Refer to the **Schedule of Events and Selection Summary** in Section 1 of this document for response details.

Respondent is responsible for ensuring that their RFP response is received in a timely manner and that it contains all elements of the RFP, including all required forms and any addendums issued. Respondent should complete the Solicitation Response Cover Sheet/Acknowledgement of Addenda/Submission Checklist contained in Attachment A and all other requirements identified in the RFP. RFP responses received after the deadline will not be opened and therefore not evaluated or considered for award, regardless of whether or not the delay was outside the control of the submitting provider. The City of La Marque reserves the right to negotiate with providers submitting timely responses in accordance with state and federal procurement requirements, to reject any and all bids, and to select multiple respondents if it deems it's in the best interest of the Entity and/or desires to do so.

The Entity is an Affirmative Action/Equal Opportunity Employer. Minority Business Enterprises, Small Business Enterprises, Women Business Enterprises, and Labor Surplus Area firms are encouraged to submit bids.

**CONTENTS** **PAGE**


**AMERICAN RESCUE PLAN ACT (ARPA) REQUEST FOR PROPOSALS (RFP)** **2**

**REQUEST FOR PROPOSALS – GENERAL INFORMATION** **4**

**SECTION 1 – SCHEDULE OF EVENTS AND SELECTION SUMMARY** **4**

**SECTION 2 – INTRODUCTION AND GENERAL CONDITIONS** **6**

**SECTION 3 – SCOPE OF WORK/TECHNICAL SPECIFICATIONS** **9**

**SECTION 4 – EVALUATION CRITERIA** **12**

**SECTION 5 – RESPONSE SUBMISSION REQUIREMENTS** **14**

**LIST OF EXHIBITS** **16**

EXHIBIT A: PROJECT SCOPE OF WORK 17

EXHIBIT B: REQUIRED CONTRACT PROVISIONS 18

EXHIBIT C: OTHER RELEVANT INFORMATION/SPECIAL CONDITIONS 31

**LIST OF ATTACHMENTS A THROUGH L** **32**

ATTACHMENT A: SOLICITATION RESPONSE COVER SHEET/ACKNOWLEDGEMENT OF ADDENDA/SUBMISSION CHECKLIST 33

ATTACHMENT B: PRICING SHEET 35

ATTACHMENT C: SYSTEM FOR AWARD MANAGEMENT (SAM.GOV) RECORD SEARCH 36

ATTACHMENT D: CUSTOMER/CLIENT REFERENCES 38

ATTACHMENT E: CERTIFICATE OF INSURANCE (IF APPLICABLE) 41

ATTACHMENT F: ETHICS AND CONFLICT OF INTEREST ACKNOWLEDGEMENT 42

ATTACHMENT G: STATEMENT OF CONFLICTS OF INTEREST (IF ANY) 43

ATTACHMENT H: CONFLICT OF INTEREST QUESTIONNAIRE FORM (CIQ) 44

ATTACHMENT I: DISCLOSURE OF LOBBYING ACTIVITIES SF-LLL CERTIFICATION 46

ATTACHMENT J: TEC CERTIFICATE OF INTERESTED PARTIES (FORM 1295) 48

ATTACHMENT K: BIDDER'S CERTIFICATION 49

ATTACHMENT L: NON-COLLUSION AFFIDAVIT 50

**APPENDIX I – SAMPLE CONTRACT** **51**

| QUESTIONS & ANSWERS ONLY – SOLE POINT OF CONTACT | |
|---|---|
| The Entity will allow written questions and requests for clarification of this solicitation. Questions must be submitted by email to the Sole Point of Contact listed below. Respondents' names will be removed from questions in any responses released. | |
| **SOLE POINT OF CONTACT NAME:** | City Clerk |
| **ADDRESS:** | 1111 Bayou Road La Marque, TX 77568 |
| **EMAIL:** | bids@cityoflamarque.org |
| **PHONE:** | 409-938-9259 |
| **DELIVERY OF RESPONSE PROPOSAL – POINT OF CONTACT** | |
| **For digital delivery,** the Subject Line should include Respondent's Name, RFP number, and time/due date of RFP and completed response and all attachments uploaded to the following point of contact: | |
| **NAME:** | - |
| **TITLE:** | City Clerk |
| **DELIVERY POINT:** | Bidsubmit.cityoflamarque.org |
| | |
| **If mailed or hand-delivered,** sealed proposals (an original and 3 copies) should be submitted on the original forms provided. Each response must be sealed and should be placed in a properly identified envelope with Respondent's Name, RFP number, and time/due date of RFP. | |
| **For mail or hand-delivery,** deliver response and all attachments to: | |
| **NAME:** | - |
| **TITLE:** | City Clerk |
| **ADDRESS:** | 1111 Bayou Road LaMarque, TX 77568 |
| | |

## 1.2 SELECTION OF RESPONDENT(S)

1.2.1 The Entity intends to select Respondent(s) that best meet the needs of the Entity and that provide the best overall value. The Entity reserves the right to award multiple contracts from the finalist pool of successful Respondent(s). Respondents will be rated and ranked according to the evaluation criteria set forth below. The Entity intends to enter into negotiations with the top-ranked Respondent (i.e., the most highly qualified) and attempt to negotiate a fair and reasonable price; if negotiations fail, the Entity shall formally end negotiations with that respondent and attempt to negotiate with the next most highly qualified provider. The Entity shall proceed in like manner until it has contracted with a sufficient number of providers to respond to the identified scope of work.

1.2.2 The Entity reserves the right to check references on any projects performed by the Respondent, whether provided by the Respondent or known by the Entity.

1.2.3 The Entity is not required to accept the lowest cost proposal.

1.2.4 The Entity may make such investigation as deemed necessary to determine the ability of the Respondent to perform the work, and the Respondent shall furnish to the Entity all such information by the date specified by the Entity.

1.2.5 The Entity may conduct such investigations as it deems necessary or appropriate to assist in the evaluation of any RFP response and to establish the responsibility, qualifications, and financial ability of the Respondent, their proposed subcontractors, and other persons or organizations submitted within a Respondent's response to do the work to the Entity's satisfaction within the prescribed time.

1.2.6 The Entity reserves the right to conduct interviews of short-listed Respondent(s) prior to making a final selection.

1.2.7 The Entity reserves the right to contact references as deemed necessary to complete its analysis.

**See SECTION 4 – EVALUATION CRITERIA, for additional information on how Respondents will be evaluated and selected.**

# SECTION 2 – INTRODUCTION AND GENERAL CONDITIONS

## 2.1 GENERAL DESCRIPTION OF THE SCOPE OF WORK (SOW) – SEE *SECTION 3* AND *EXHIBIT A* FOR SOW DETAILS

The Entity has received an allocation of American Rescue Plan Act (ARPA) funds and is issuing a Request for Proposals (RFP) for a general purchases and supplies contract. The item(s) are being solicited to assist the Entity in completing and implementing programs and/or projects funded with its allocation of ARPA funds.

This solicitation includes purchase of:

2.1.1 **General Description:** Examples: Trailer Mounted Pothole Patcher with DuraPatcher Technology

2.1.2 The scope of work includes all labor, materials, goods and/or services necessary to provide the purchased items, including any installation specified in **Exhibit A**. The respondent shall submit a written copy of all warranty information prior to final acceptance by Entity.

2.1.3 **REFERENCED BRAND EXAMPLE:** Catalogs, brand names or manufacturer's references are descriptive only and indicate type and quality desired. Proposals on brands of like nature and quality will be considered. If proposing other than the referenced brands/model number, Respondent must show manufacturer, brand or trade name, product number and provide complete descriptive information of product offered and include with response. Failure to take exception to specifications or reference data will require Respondent to furnish specified brand names, numbers, etc.

## 2.2 CONSIDERATION OF AWARD

To be considered for award, Respondents must adhere to the requirements, when applicable to Vendors, as set forth in **Exhibit B**, the ARPA Required Provisions, and provide all other required information and documentation as set forth in this solicitation.

## 2.3 CONTRACT AWARD

The Entity may award a Firm Fixed Price Contract. A Respondent's proposal must be responsive to this solicitation and include all required documents as instructed in the solicitation and listed in the *Solicitation Response Cover Sheet/Acknowledgement of Addenda/Submission Checklist* **(Attachment A)**.

## 2.4 TERM OF PURCHASE CONTRACT

The Contract or Purchase Order shall be effective upon date of execution (signed by the Entity designee), shall contain terms and conditions for the purchase, including delivery date and delivery location, and shall expire upon delivery and final acceptance by the Entity. A sample contract is available for review at **Appendix I**.

## 2.5 BID ACCEPTANCE

2.5.1 Proposals must be received, time stamped or otherwise acknowledged before the specified hour and date. Late submittals WILL NOT be considered under any circumstances. The Entity will not be held responsible for any solicitation response that is mishandled prior to receipt by the Entity. The Entity will not be responsible for any technical issues that result in late delivery, inappropriately identified documents, or other submission error that may lead to disqualification (including substantive or administrative) or nonreceipt of the Respondent's response.

2.5.2 The Entity reserves the right to accept or reject any and all proposals, to accept any proposal deemed advantageous and to waive irregularity in the proposals. By submitting a response, the Respondent acknowledges and will adhere to all specifications as stated within this procurement packet.

2.5.3 Proposals CANNOT be altered or amended after the due date. Any alterations made before the due time must be initialed by Respondent or authorized agent. No response may be withdrawn after due date without approval and based on a written acceptable reason.

2.5.4 The Entity reserves the right to revise or amend the specifications prior to the due date. Such revisions or amendments, if any, will be announced by amendments or addendums to these specifications. Copies of such amendments or addendums so issued will be posted to the Entity's bidding websites. If Respondent demonstrates just reason for a change, the Entity must have at least five (5) working days' notice prior to submission due date.

2.5.5 In the event that Respondent finds discrepancies in or omissions from the specifications or other documents or be in doubt as to their meaning, Respondent should at once notify the Entity Sole Point of Contact and obtain clarification prior to submitting a response.

2.5.6 All Respondents must meet or exceed the minimum specifications to be considered a valid response. The Entity reserves the right to accept or reject all or any part of any response, waive minor technicalities and award the contract either to the lowest responsible Respondent or to the Respondent who provides goods or services at the best value for the Entity.

2.5.7 The Respondent agrees to protect the Entity from claims involving infringement of patents or copyrights.

PROPRIETARY OR CONFIDENTIAL INFORMATION; TEXAS PUBLIC INFORMATION ACT: Any proprietary, trade secret, or otherwise confidential information Respondent includes in its Proposal must be clearly labeled as proprietary or confidential information, and Respondent must identify the specific exception to disclosure in the Public Information Act (PIA). Merely making a blanket claim that the entire Proposal is protected from disclosure because it contains some proprietary information is not acceptable and shall make the entire Proposal subject to release under the PIA. Any information which is not clearly identified as proprietary or confidential shall be deemed to be subject to disclosure pursuant to the PIA.

Information, documentation, and other material in connection with this Response or any resulting Contract may be subject to public disclosure under the Texas PIA, Chapter 552 of the Texas Gov't Code.

2.5.8 There is no guarantee a contract will be awarded. The Entity reserves the right to cancel this RFP at any time.

2.5.9 All proposals become public documents and are subject to public review (upon request and as allowed by law). The submission of an RFP response will constitute representation by the Respondent that it understands and has complied with the requirements of the RFP. Submission of a response indicates the RFP information provided was sufficient in scope and detail to convey understanding of anticipated terms and conditions for performance of the work.

2.5.10 RFP Respondents assume all costs of preparation of the proposal. RFP responses become the property of the Entity.

**2.6 PROHIBITED COMMUNICATION**

On issuance of this solicitation, except for the written inquiries described in Section 2.6 above, the Entity, its representative(s), or partners will not answer any questions or otherwise discuss the contents of this solicitation with any potential respondent. This restriction does not preclude discussions between affected parties for the purposes of conducting business unrelated to this solicitation. Failure to comply with these requirements may result in disqualification of respondent's solicitation response.

**2.7 TERMINATION CONDITIONS**

See Contract at **Appendix I** for Termination Conditions.

2.7.1 **FAILURE TO ENTER INTO A CONTRACT**

Should the Selected Respondent ("Vendor"), to whom the contract is awarded, fail to enter into a contract within twenty-one (21) business days, the Entity may then, at its option, retain the Vendor's bid deposit/bond (if required) and accept the bid of the next lowest responsible bidder.

## SECTION 3 – SCOPE OF WORK/TECHNICAL SPECIFICATIONS

### 3.1 MINIMUM REQUIREMENTS

3.1.1 The selected Vendor shall have no convictions or civil judgments preceding nor thereafter this solicitation rendered against Respondent for 1) commission of fraud or a criminal offense in connection with obtaining, attempting to obtain, or performing a public (federal, state or local) transaction or contract under a public transaction; 2) violation of federal or state antitrust statutes or commission of embezzlement, theft, forgery, bribery, falsification or destruction of records, making false statements, or receiving stolen property.

3.1.2 The selected Vendor shall not ever have been indicted for or otherwise criminally or civilly charged by a government entity (federal, state, or local) with commission of any of the offenses enumerated above.

3.1.3 Where applicable, Vendor's staff must meet and maintain current certifications and or licensure requirements as mandated by state law or the appropriate licensing authority.

3.1.4 Vendor must not be debarred at the time of response submission, and prior to award of a contract. The System for Award Management (SAM.gov) and the Texas Comptroller's Debarred Vendor List will be checked to ensure the Vendor is not excluded from contract participation at the federal level. If the Vendor is debarred, the Vendor's proposal will not be evaluated.

### 3.2 SCOPE OF SERVICES Construct

3.2.1 **The required products or services shall be provided in accordance with attached Exhibits:**

- **Exhibit A:** Project Scope of Work
- **Exhibit B:** ARPA Required Provisions
- **Exhibit C:** Other Relevant Information

3.2.2 **Work Orders**

During the term of any contract awarded, the Entity may request the Vendor to perform certain tasks as described in the scope, subject to a specific work order authorization. All work authorizations shall be in writing, signed by all parties, and shall include a scope of services, a list of tasks to be performed, a time schedule, a list of deliverables and such other information or special conditions as may be necessary for the work requested.

3.2.3 **Condition of Product:** New Equipment ONLY; NO re-manufactured or "gray market" items. All items must be covered by the manufacturer's warranty. The unit(s) shall be made ready for continuous operation upon delivery. Respondent is cautioned that any unit delivered to the FOB point that does not meet specifications in every aspect will not be accepted.

3.2.4 **All Parts:** All parts not specifically mentioned which are necessary for the unit to be complete and ready for operation or which are normally furnished as standard equipment shall be furnished by the vendor. All parts shall conform in strength, quality, and workmanship to the accepted standards of the industry.

3.2.5 **Manuals:** Manuals containing illustrated parts list and operating and service instructions for the units shall be delivered with units. Manuals shall outline all necessary service and operating instructions for the units delivered and provide necessary warning and safety precautions.

3.2.6 **Warranty Requirements:** The units shall be warranted against defects in material and workmanship for a standard manufacturer's warranty and shall cover 100% parts and labor for the units. Vendor shall furnish warranty and a list of warrantied repair companies to the Entity at time of delivery. The warranty begins on the date the units are determined to meet specifications and accepted by the Entity.

**3.3 DELIVERY AND ACCEPTANCE**

3.3.1 **Freight Charges:** Shipping shall be Free on Board (FOB) destination; therefore, unit prices must include all shipping, handling, fuel surcharges, and delivery fees.

3.3.2 **Delivery Schedule:** Recommended delivery not to exceed 90 calendar days from date of award; delivery terms may be a factor in determining award. Respondent must contact the Entity point of contact to schedule delivery date and time. Respondent shall provide a minimum forty-eight (48) hours' notice prior to delivery.

**3.4 DELIVERY CONTACT(S):** Respondent shall contact the Entity for delivery a minimum of one (1) week in advance to coordinate delivery.

| | |
|---|---|
| **Delivery Contact Name:** | City Clerk |
| **Phone:** | (409) 938-9259 |
| **Email:** | bids@cityoflamarque.org |

**3.5 REGISTRATION AND TITLING (when applicable):** Permanent registration and titling will be performed by **the Entity**. **DO NOT REGISTER ITEM**. Respondent shall supply, as applicable, dealer's tag for item for sixty (60) days from date of delivery. The original Certificate of Origin (COO) or Manufacturer's Statement of Origin (MSO) as well as the most current version of TXDMV Form 130U or Application for Texas Title with signature shall be submitted with an invoice to the Entity.

**3.6 DELIVERY DELAYS:** If delay is foreseen, Respondent shall give written notice to the Entity and must keep the Entity advised of status of order at all times. Default in promised Delivery Days After Receipt of Order (ARO) without accepted reasons or failure to meet specifications authorizes the Entity to cancel contract/Purchase Order.

**3.7 COMPLIANT PRODUCTS:** Delivery does not occur until the Respondent delivers products, materials, or services in full compliance with the specifications to Entity's FOB destination, unless delivery is specifically accepted, in whole or in part, by the Entity. Providing products, materials, or services which do not meet all specification requirements does not constitute delivery. Entity reserves the right to require new delivery or a refund in the event that materials or products not meeting specifications are discovered after payment has been made. NO SUBSTITUTIONS PERMITTED WITHOUT WRITTEN APPROVAL OF THE ENTITY.

**3.8 ACCEPTANCE:** All equipment ordered will be subject to acceptance inspection and performance testing upon receipt. Acceptance inspection and performance testing will not take more than five (5) working days, weather permitting. Respondent will be notified within this time frame of any units not

delivered in full compliance with the purchase order specifications. In the event the goods tested fail to meet or exceed all conditions and requirements of the solicitation and Contract, the goods will be rejected in whole or in part, at the State's Entity's option, and returned to the Vendor or held for disposition at the Vendor's expense. Latent defects may result in cancellation of the Contract at no expense to the Entity.

## 3.9 RECORD KEEPING

3.9.1 Respondents shall provide, enter, or upload all documentation, communications, and records including all permits, certifications, warranties, and approvals regarding all provided services/ products as instructed by the Entity.

3.9.2 Respondents shall maintain records of all events that affect, or may be expected to affect the quality, scope, or progress of the services. All records shall be retained for a period of **five (5) years** following the closeout of the Entity's federal grant.

3.9.3 **Insurance**

3.9.3.1 If applicable, an original, certified copy of an Insurance Certificate listing the Entity as additional insured, must be submitted with the Respondent's submittal **(see Attachment E for requirements).** The successful Respondent will be required to maintain at all times during performance of the Contract, the insurance detailed below.

3.9.3.2 Workers' Compensation Insurance

3.9.3.3 Employers' Liability Insurance WILL PROVIDE UPON AWARD

3.9.3.4 Comprehensive General Liability Insurance

3.9.3.5 Excess Liability Insurance, Comprehensive General Liability Insurance, Comprehensive Automobile Liability Insurance

## 3.10 TERMS AND CONDITIONS

3.10.1 **Indemnity Clause** – The Respondent agrees to indemnify and save harmless the Entity and its officers, agents, and employees from any and all claims, causes or action, and damages of every kind, for injury to or death of any person and damages, to property arising out of or in connection with the work done by Respondent under this contract, and including acts or omissions of the Entity or its officers, agents, or employees in connection with said contract.

3.10.2 **Equal Opportunity Employer** – The successful Respondent shall warrant and agree that he/she is an Equal Opportunity Employer. Should complaints of any form of discrimination, either in dispensation of the service, or within company hiring policies be substantiated, this contract may be terminated immediately.

3.10.3 **Assignment** – The successful Respondent may not assign, sell, or otherwise transfer this contract without prior written consent of the Entity.

3.10.4 **Compliance with Laws** – The Respondent agrees to comply with the requirements of Section 603 of the Act, regulations adopted by Treasury pursuant to Section 603(f) of the Act, and guidance issued by Treasury regarding the foregoing.

3.10.4.1 Additionally, all applicable local government codes for the State of Texas also apply to this contract. All equipment, supplies and work furnished under this contract shall comply with applicable laws, ordinances, and regulations. Respondent shall obtain and pay for such

permits and inspections as are required for the legal performance of this work, unless otherwise specified. Respondent shall comply with all federal and state laws and Entity's ordinances and codes applicable to the Respondent's operation under this contract. These specifications and the contract resulting here shall be fully governed by the laws of the State of Texas and shall be fully performable in Galveston County, Texas, where venue for any proceeding arising hereunder will lie.

3.10.5 **Silence of Specifications** – The apparent silence of specifications as to any detail, or the apparent omission from it or a detailed description concerning any point, shall be regarded as meaning that only the best commercial practice is to prevail and that only material and workmanship of the finest quality shall be used. All interpretations of specifications shall be made on the basis of this statement. The Respondent should request clarification from the Entity as specified in this document.

## SECTION 4 – EVALUATION CRITERIA

**4.1 RESPONSIVENESS OF QUALIFICATIONS SUBMISSION:** **Pass/Fail**

Qualifications submission shall be responsive to all material requirements that shall enable the evaluation committee to evaluate responses in accordance with the evaluation criteria to make a recommendation to Officials of the Entity.

**4.2 FINANCIAL STABILITY OF RESPONDENT:** **Pass/Fail**

Financial stability of the Respondent to successfully undertake the project and the ability to ensure performance over the duration of the contract.

**4.3 TECHNICAL REQUIREMENTS:** **100 Points Total**

Extent to which the provided service or products meets the needs of the Entity, including, but not limited to, the criteria in the evaluation matrix and in the submission requirements section and as expressed in this document.

**4.4 EVALUATION CRITERIA:**

**Solicitation responses shall be evaluated in accordance with Part 200 of the Uniform Administrative Requirements, Cost Principles, and Audit Requirements. The Entity will make the selection on the basis of demonstrated competence and qualifications; and to a Respondent that provides a fair and reasonable price.**

The Entity evaluates the responses, prepares a Bid Tabulation sheet, determines the award on the basis of fair and reasonable pricing considered to be the Best Value to the Entity.

Only responses submitted in compliance with the **Schedule of Events + Response Requirements** section and meeting qualifications will be considered. Failure to submit the required information may be cause for rejection of the bid response. The Entity reserves the right to waive informalities and minor irregularities in bids received.

**Initial Compliance Screening**
The Entity will perform an initial screening of all solicitation responses received. Unsigned solicitation responses, and solicitation responses that do not meet the minimum qualifications above and/or do not include all required forms and information may be subject to rejection without further evaluation.

**Additional Evaluation Criteria**
All solicitations will be evaluated based on Responsiveness and Price. Responsiveness means adhering to the Terms and Conditions and specifications of the supplies requested. See additional evaluation criteria under Exhibit A.

***Evaluation Process:*** *The Entity's Evaluator(s) completes an evaluation of the submitted proposal using the criteria described below.* ***The proposal submitted must be a firm-fixed price.***

**EVALUATION CRITERIA**

| EVALUATION CRITERIA | SCORE |
|---|---|
| Responsiveness of Proposal | Pass/Fail |
| Financial Stability | Pass/Fail |
| Understanding of Work; Experience and Qualifications | 20 |
| Capacity to Perform, Delivery/Service Schedule, and References | 20 |
| Pricing | 60 |
| **TOTAL SCORE** | **100** |

## SECTION 5 – RESPONSE SUBMISSION REQUIREMENTS

This section details the requirements for submitting all required information. Respondents are advised to see **Schedule of Events + Response Requirements** on Page 4 of this document, and to carefully review all the requirements and submit all documents and information as indicated in this RFP. Additional information may be requested for clarification. Incomplete responses may lead to a submission being deemed nonresponsive and will not be considered.

To ensure some degree of uniformity in the submission, please follow the outline listed below.

### 5.1 STATEMENT OF INTEREST

The statement of interest should be limited to a maximum of two (2) pages and must include a brief introduction of the company, a statement of the Respondent's understanding of the work to be performed and that the company meets and will comply with the requirements set forth in this document.

### 5.2 EXPERIENCE AND RELEVANT QUALIFICATIONS

Respondent shall demonstrate related professional qualifications, experience, and knowledge similar to this scope of work. Response should include information similar in scope and size to the scope of work in this RFP. Limit to four (4) pages. Minimum submission shall address the following:

5.2.1 **Experience** – Respondents shall provide a concise narrative description of their firm's experience in services similar in size and scope to the requested scope of services. Describe any work performed in or for the Entity. Respondents shall provide descriptions of at least three (3) projects of similar size and scope to this Program. Projects should include project location, duration and project description and scope of work the Respondent performed.

5.2.2 **Relevant Qualifications** – Respondents must provide a brief summary to include total number and types of employees, skills, knowledge and abilities, company background history, and number of years in providing similar services as outlined in this document.

### 5.3 CAPACITY TO PERFORM

Respondent should state its firm commitment to provide goods or services within the prescribed delivery date and time.

5.3.1 **Work Capacity:** Respondent shall provide information to demonstrate capacity to perform requested work. Respondents shall provide a detailed typical schedule to show sequence of key work activities and the number of days to complete each task.

5.3.4 If applicable, **Bonding Capacity:** Respondent(s) shall provide proof of bonding capacity in a statement addressed to the Entity from a certified bonding company authorized to do business in the State of Texas. The letter must clearly state the amount of Firm's bonding capacity to be reserved for the Entity's projects. Firm shall carry a minimum bonding capacity of the project value upon execution of the Contract. The bond(s) must be made payable to the Entity. In your response, please provide a statement regarding your ability to provide proof of bonding as directed in the Exhibits that follow.

**5.4 FINANCIAL STABILITY**

Respondent shall provide a statement that includes the following:

5.4.1 A full disclosure of any events, liabilities, or contingent liabilities that could affect Respondent's financial ability to perform this contract; and

5.4.2 Other financial information sufficient for the Entity, in its sole judgement, to determine if Respondent is financially solvent or adequately capitalized.

**5.5 LEGAL ACTIONS**

Provide a list of all pending litigation and include a brief description of the reason for legal action (if applicable).

**5.6 PRICING**

5.6.1 Respondents shall complete and submit the Pricing Sheet (see **Attachment B**).

5.6.2 Prices for all goods and/or services shall be all inclusive. Pricing offered shall be valid for ninety (90) days from response due date.

5.6.3 The City of La Marque is exempt from taxes. DO NOT INCLUDE TAX IN YOUR PRICING SUBMITTAL.

5.6.4 Estimated Quantities – Quantities indicated are estimated based upon the best available information. The Entity reserves the right to increase or decrease the quantities by any amount deemed necessary to meet its needs without any adjustments in the bid price.

See additional pricing criteria under Exhibit A, Options

# LIST OF EXHIBITS

| | |
|---|---|
| EXHIBIT A | PROJECT SCOPE OF WORK |
| EXHIBIT B | REQUIRED CONTRACT PROVISIONS |
| EXHIBIT C | OTHER RELEVANT INFORMATION/SPECIAL CONDITIONS |

# EXHIBIT A – PROJECT SCOPE OF WORK

To be provided by the Entity

| Item | Description | | Quantity | Unit of Measure |
|---|---|---|---|---|
| 1 | Trailer Mounted Pothole Patcher with DuraPatcher Technology | | 1 | See Below |
| 2 | | | | |
| 3 | | | | |
| 4 | | | | |
| 5 | **DELIVERY LOCATION: Provide the Delivery Location** | 1500 Municipal Drive, La Marque, Texas 77568 | | |
| 6 | **DELIVERY SCHEDULE: Provide the number of calendar days required for delivery after receipt of the order** | 90 days | | |

**Basic Specifications for a Spray Injection Patching Truck:**

**Purpose:**
These specifications shall be construed as the minimum acceptable standards for a trailer mounted pothole patcher using a tow vehicle with aggregate supply. Should the manufacturer's current published data or specifications exceed these standards, the manufacturer's standards shall be considered minimum and shall be furnished. All integral parts not specifically mentioned in the scope of these specifications that are necessary to provide a complete working unit shall be furnished. Additionally, the machine for bid offered shall include all standard manufacturer's equipment. The one-man pothole patcher must be a new current production model and shall meet all EPA applicable standards at the time of manufacture.

The use of specific names and numbers in the specification is not intended to restrict the bidder or any seller or manufacturer, but is intended solely for the purpose of indicating the type, size and quality of equipment considered best adapted to the uses of city participating in this bid.

**Bidder Price:**
The bid price shall include all destination charges, delivery charges, title fees, rebates, and all other applicable costs and refunds.

**MANUALS**
Each unit will be provided with one (1) copy of the operator's manuals, one (1) copy of the current parts manuals and (1) copy of the repair manual. Units will not be accepted for delivery until the manuals as outlined above are received by the purchaser.

**Warranty:**
Units purchased under this specification shall be warranted against defects in materials and workmanship for a period of not less than one year from date of delivery to customer. Items thought to be defective will be returned to factory prepaid to be repaired or replaced. The manufacturer shall warranty the equipment for a period of one year. Engine must be covered for Major Components for a period of 2 years or 2000 hours. Bidder warranty policy must be included with bid submittal

**Basic Minimum Requirements:**
The trailer-mounted machine shall be designed and constructed to repair larger cracks, potholes, and broad areas. The machine shall be capable of blowing water, dust or debris from the pothole or surface to be repaired. The machine must be capable of patching while moving forward or reverse, must be capable of patching at temperatures as low as 5 degrees F. The machine must be capable of performing each of the following functions:

| | Yes | No |
|---|---|---|
| Clean cracks and surfaces | ✓ | |
| Spray liquid asphalt emulsion over area to provide a tack coat | ✓ | |
| Apply emulsion-coated aggregate to provide high-density patch | ✓ | |
| Cover repaired area with dry aggregate | ✓ | |
| Overnight electric heating for maintaining emulsion temperature | ✓ | |

| **Dimensions:** | Yes | No |
|---|---|---|
| Width and height to meet State and Federal requirements without requiring oversize permits. | ✓ | |
| Air is used to feed and propel aggregate and emulsion to the nozzle at up to 135 lbs. per minute. No moving parts are involved in the spray injection process. | ✓ | |
| Aggregate feed system can pass up to 2-1/2 inch rock and is regulated by engine rpm providing infinite adjustment for job-site conditions. | ✓ | |
| Boom system is ergonomically designed for easy, natural movement without fatigue. | ✓ | |
| Self-cleaning Vent-Flo nozzle can patch close to traffic without overspray. | ✓ | |

| **Specifications:** | Yes | No |
|---|---|---|
| 135 lbs./min, 1/4-1/2-inch wet or dry aggregate | ✓ | |

| **Blower:** | Yes | No |
|---|---|---|
| Integrated 6 yd. rectangular in shape with 9ft x 7ft. opening (waiting to hear from factory - unsure) | | ✓ |
| Direct driven from engine flywheel | ✓ | |
| 10 psi relief valve | ✓ | |

| **Compressor:** | Yes | No |
|---|---|---|
| 15 cfm direct driven (waiting to hear from factory - unsure) | | ✓ |
| Governed from 70-95 psi | ✓ | |

| **Tanks:** | Yes | No |
|---|---|---|
| Emulsion - 250 gallons, 200 psi working pressure R-15 insulation | ✓ | |
| Two 1500-watt heat blankets with thermostats | ✓ | |
| Clean-Out - 15-gallon, 200 psi working pressure | ✓ | |
| Engine Fuel - 18 gallons | ✓ | |

| **Swing Hose Carrier:** | Yes | No |
|---|---|---|
| Trifold No Fatigue Design. | ✓ | |

| **Operator Controls:** | Yes | No |
|---|---|---|
| Emulsion and rock flow, engine rpm, horn. | ✓ | |

| **Frame:** | Yes | No |
|---|---|---|
| Emulsion and rock flow, engine rpm, horn. | ✓ | |

| **Miscellaneous:** | Yes | No |
|---|---|---|
| Dual axle, leaf spring (12,000 lb.). | ✓ | |
| (4) 225/75R15 Load "D" tires. | ✓ | |
| Electric brakes. | ✓ | |
| Tail, brake, directional, strobe and arrow-board lights. | ✓ | |
| 96" wide x 194" long x 91" high. (waiting to hear from factory - unsure) | | ✓ |
| Weight – 5,380 lbs dry. (waiting to hear from factory - unsure) | | ✓ |

| **Safety Decals:** | Yes | No |
|---|---|---|
| Unit shall be equipped with required safety decals and signage | ✓ | |

| Aggregate Delivery Hose: | Yes | No |
|---|---|---|
| 2" inside diameter, rubber-lined, abrasion resistant, non-kinking hose outfitted with spiral wire reinforcement. To minimize wear points, at no point will there be bends in the delivery hose with a radius of less than 18". | ✓ | |

**Options:**
**Bid must include the cost for each of the following options, itemized separately on the bid**

| | Yes | No |
|---|---|---|
| Crack Sealing Wand and associated hardware installed and ready to use. (waiting to hear from factory - unsure) | | ✓ |

**This project is being supported, in whole or in part, by the U.S. Department of the Treasury, in utilizing the U.S. Department of the Treasury Coronavirus State and Local Fiscal Recovery Funds (ARPA) program and is subject to all applicable Federal and State laws and regulations.**

# EXHIBIT B – ARPA REQUIRED PROVISIONS

CFR 200.327 Contract provisions. The Non-Federal entity's contracts should contain applicable provisions described in Appendix II to Part 200—Contract Provisions for Non-Federal Entity Contracts Under Federal Awards. The Non-Federal entity's contracts must contain the provisions described in Appendix II to Part 200—Contract Provisions for Non-Federal Entity Contracts Under Federal Awards, as applicable.

| THRESHOLD | PROVISION | CITATION | PROVISION APPLIES TO |
|---|---|---|---|
| | **2 CFR 200 Appendix II (A-L)** | | |
| >$250,000 (Simplified Acquisition Threshold) | Contracts for more than the simplified acquisition threshold, which is the inflation adjusted amount determined by the Civilian Agency Acquisition Council and the Defense Acquisition Regulations Council (Councils) as authorized by 41 U.S.C. 1908, must address administrative, contractual, or legal remedies in instances where contractors violate or breach contract terms, and provide for such sanctions and penalties as appropriate. | 2 CFR 200 APPENDIX II (A) | Contractor RFP/IFB<br>Contractor RFQ<br>Subrecipients |
| >$10,000 | All contracts in excess of $10,000 must address termination for cause and for convenience by the Non-Federal entity including the manner by which it will be affected and the basis for settlement. | 2 CFR 200 APPENDIX II (B) | Contractor RFP/IFB<br>Contractor RFQ<br>Subrecipients |
| None | Equal Employment Opportunity. Except as otherwise provided under 41 CFR Part 60, all contracts that meet the definition of "federally assisted construction contract" in 41 CFR Part 60-1.3 must include the equal opportunity clause provided under 41 CFR 60-1.4(b), in accordance with Executive Order 11246, "Equal Employment Opportunity" (30 FR 12319, 12935, 3 CFR Part, 1964-1965 Comp., p. 339), as amended by Executive Order 11375, "Amending Executive Order 11246 Relating to Equal Employment Opportunity," and implementing regulations at 41 CFR part 60, "Office of Federal Contract Compliance Programs, Equal Employment Opportunity, Department of Labor."<br>41 CFR 60-1.4 Equal opportunity clause.<br>(b) Federally assisted construction contracts. (1) Except as otherwise provided, each administering agency shall require the inclusion of the following language as a condition of any grant, contract, loan, insurance, or guarantee involving federally assisted construction which is not exempt from the requirements of the equal opportunity clause:<br>The [recipient] hereby agrees that it will incorporate or cause to be incorporated into any contract for construction work, or modification thereof, as defined in the regulations of the Secretary of Labor at 41 CFR Chapter 60, which is paid for in whole or in part with funds obtained from the Federal Government or borrowed on the credit of the Federal Government pursuant to a grant, contract, loan, insurance, or guarantee, or undertaken pursuant to any Federal program involving such grant, contract, loan, insurance, or guarantee, the following equal opportunity clause:<br>During the performance of this contract, the contractor agrees as follows:<br>(1) The contractor will not discriminate against any employee or applicant for employment because of race, color, religion, sex, sexual orientation, gender identity, or national origin. The contractor will take affirmative action to ensure that applicants are employed, and that employees are treated during employment without regard to their race, color, religion, sex, sexual orientation, gender identity, or national origin. Such action shall include, but not be limited to the following:<br>Employment, upgrading, demotion, or transfer; recruitment or recruitment advertising; layoff or termination; rates of pay or other forms of compensation; and selection for training, including apprenticeship. The contractor agrees to post in | 2 CFR 200 APPENDIX II (C) and 41 CFR §60-1.4(b) | Contractor RFP/IFB<br>Contractor RFQ<br>Subrecipients |

| THRESHOLD | PROVISION | CITATION | PROVISION APPLIES TO |
|---|---|---|---|
| | conspicuous places, available to employees and applicants for employment, notices to be provided setting forth the provisions of this nondiscrimination clause.<br>(2) The contractor will, in all solicitations or advertisements for employees placed by or on behalf of the contractor, state that all qualified applicants will receive consideration for employment without regard to race, color, religion, sex, sexual orientation, gender identity, or national origin.<br>(3) The contractor will not discharge or in any other manner discriminate against any employee or applicant for employment because such employee or applicant has inquired about, discussed, or disclosed the compensation of the employee or applicant or another employee or applicant. This provision shall not apply to instances in which an employee who has access to the compensation information of other employees or applicants as a part of such employee's essential job functions discloses the compensation of such other employees or applicants to individuals who do not otherwise have access to such information, unless such disclosure is in response to a formal complaint or charge, in furtherance of an investigation, proceeding, hearing, or action, including an investigation conducted by the employer, or is consistent with the contractor's legal duty to furnish information.<br>(4) The contractor will send to each labor union or representative of workers with which he has a collective bargaining agreement or other contract or understanding, a notice to be provided advising the said labor union or workers' representatives of the contractor's commitments under this section and shall post copies of the notice in conspicuous places available to employees and applicants for employment.<br>(5) The contractor will comply with all provisions of Executive Order 11246 of September 24, 1965, and of the rules, regulations, and relevant orders of the Secretary of Labor.<br>(6) The contractor will furnish all information and reports required by Executive Order 11246 of September 24, 1965, and by rules, regulations, and orders of the Secretary of Labor, or pursuant thereto, and will permit access to his books, records, and accounts by the administering agency and the Secretary of Labor for purposes of investigation to ascertain compliance with such rules, regulations, and orders.<br>(7) In the event of the contractor's noncompliance with the nondiscrimination clauses of this contract or with any of the said rules, regulations, or orders, this contract may be canceled, terminated, or suspended in whole or in part and the contractor may be declared ineligible for further Government contracts or federally assisted construction contracts in accordance with procedures authorized in Executive Order 11246 of September 24, 1965, and such other sanctions may be imposed and remedies invoked as provided in Executive Order 11246 of September 24, 1965, or by rule, regulation, or order of the Secretary of Labor, or as otherwise provided by law.<br>(8) The contractor will include the portion of the sentence immediately preceding paragraph (1) and the provisions of paragraphs (1) through (8) in every subcontract or purchase order unless exempted by rules, regulations, or orders of the Secretary of Labor issued pursuant to section 204 of Executive Order 11246 of September 24, 1965, so that such provisions will be binding upon each subcontractor or vendor. The contractor will take such action with respect to any subcontract or purchase order as the administering agency may direct as a means of enforcing such provisions, including sanctions for noncompliance:<br>Provided, however, that in the event a contractor becomes involved in, or is threatened with, litigation with a subcontractor or vendor as a result of such direction by the administering agency, the contractor may request the United States to enter into such litigation to protect the interests of the United States.<br>The [recipient] further agrees that it will be bound by the above equal opportunity clause with respect to its own employment practices when it participates in federally assisted construction work: Provided, that if the [recipient] so participating is a State or local government, the above equal opportunity clause is not applicable to any agency, instrumentality or subdivision of such government which does not participate in work on or under the contract. | | |

| THRESHOLD | PROVISION | CITATION | PROVISION APPLIES TO |
|---|---|---|---|
| | The [recipient] agrees that it will assist and cooperate actively with the administering agency and the Secretary of Labor in obtaining the compliance of contractors and subcontractors with the equal opportunity clause and the rules, regulations, and relevant orders of the Secretary of Labor, that it will furnish the administering agency and the Secretary of Labor such information as they may require for the supervision of such compliance, and that it will otherwise assist the recipient agency in the discharge of the agency's primary responsibility for securing compliance.<br><br>The recipient further agrees that it will refrain from entering into any contract or contract modification subject to Executive Order 11246 of September 24, 1965, with a contractor debarred from, or who has not demonstrated eligibility for, Government contracts and federally assisted construction contracts pursuant to the Executive Order and will carry out such sanctions and penalties for violation of the equal opportunity clause as may be imposed upon contractors and subcontractors by the administering agency or the Secretary of Labor pursuant to Part II, Subpart D of the Executive Order. In addition, the [recipient] agrees that if it fails or refuses to comply with these undertakings, the administering agency may take any or all of the following actions: cancel, terminate, or suspend in whole or in part this grant (contract, loan, insurance, guarantee); refrain from extending any further assistance to the [recipient] under the program with respect to which the failure or refund occurred until satisfactory assurance of future compliance has been received from such [recipient]; and refer the case to the Department of Justice for appropriate legal proceedings. | | |
| >$10,000,000 for ARPA but State Provision Applies at any amount and/or<br><br>>$2,000 for CDBG/Braided Funds Projects<br><br>See TX Prevailing Wage Laws | Davis-Bacon Act, as amended (40 U.S.C. 3141-3148). When required by Federal program legislation, all prime construction contracts in excess of $10,000,00 awarded by Non-Federal entities must include a provision for compliance with the Davis-Bacon Act (40 U.S.C. 3141-3144, and 3146-3148) as supplemented by Department of Labor regulations (29 CFR Part 5, "Labor Standards Provisions Applicable to Contracts Covering Federally Financed and Assisted Construction"). In accordance with the statute, contractors must be required to pay wages to laborers and mechanics at a rate not less than the prevailing wages specified in a wage determination made by the Secretary of Labor. In addition, contractors must be required to pay wages not less than once a week. The Non-Federal entity must place a copy of the current prevailing wage determination issued by the Department of Labor in each solicitation. The decision to award a contract or subcontract must be conditioned upon the acceptance of the wage determination. The Non-Federal entity must report all suspected or reported violations to the Federal awarding agency.<br><br>The contracts must also include a provision for compliance with the Copeland "Anti-Kickback" Act (40 U.S.C. 3145), as supplemented by Department of Labor regulations (29 CFR Part 3, "Contractors and Subcontractors on Public Building or Public Work Financed in Whole or in Part by Loans or Grants from the United States"). The Act provides that each contractor or subrecipient must be prohibited from inducing, by any means, any person employed in the construction, completion, or repair of public work, to give up any part of the compensation to which he or she is otherwise entitled. The Non-Federal entity must report all suspected or reported violations to the Federal awarding agency. | 2 CFR 200 APPENDIX II (D) | Contractor RFP/IFB<br><br>Subrecipients |
| >$100,000 | Contract Work Hours and Safety Standards Act (40 U.S.C. 3701-3708). Where applicable, all contracts awarded by the Non-Federal entity in excess of $100,000 that involve the employment of mechanics or laborers must include a provision for compliance with 40 U.S.C. 3702 and 3704, as supplemented by Department of Labor regulations (29 CFR Part 5). Under 40 U.S.C. 3702 of the Act, each contractor must be required to compute the wages of every mechanic and laborer on the basis of a standard work week of 40 hours. Work in excess of the standard work week is permissible provided that the worker is compensated at a rate of not less than one and a half times the basic rate of pay for all hours worked in excess of 40 hours in the work week. The requirements of 40 U.S.C. 3704 are applicable to construction work and provide that no laborer or mechanic must be required to work in surroundings | 2 CFR 200 APPENDIX II (E) | Contractor RFP/IFB<br><br>Subrecipients |

| THRESHOLD | PROVISION | CITATION | PROVISION APPLIES TO |
|---|---|---|---|
| | or under working conditions which are unsanitary, hazardous, or dangerous. These requirements do not apply to the purchases of supplies or materials or articles ordinarily available on the open market, or contracts for transportation or transmission of intelligence. | | |
| None | Rights to Inventions Made Under a Contract or Agreement. If the Federal award meets the definition of "funding agreement" under 37 CFR § 401.2 (a) and the recipient or subrecipient wishes to enter into a contract with a small business firm or nonprofit organization regarding the substitution of parties, assignment or performance of experimental, developmental, or research work under that "funding agreement," the recipient or subrecipient must comply with the requirements of 37 CFR Part 401, "Rights to Inventions Made by Nonprofit Organizations and Small Business Firms Under Government Grants, Contracts and Cooperative Agreements," and any implementing regulations issued by the awarding agency. | 2 CFR 200 APPENDIX II (F) | Contractor RFP/IFB<br>Contractor RFQ<br>Subrecipients |
| >$150,000 | Clean Air Act (42 U.S.C. 7401-7671q.) and the Federal Water Pollution Control Act (33 U.S.C. 1251-1387), as amended – Contracts and subgrants of amounts in excess of $150,000 must contain a provision that requires the Non-Federal award to agree to comply with all applicable standards, orders or regulations issued pursuant to the Clean Air Act (42 U.S.C. 7401-7671q) and the Federal Water Pollution Control Act as amended (33 U.S.C. 1251-1387). Violations must be reported to the Federal awarding agency and the Regional Office of the Environmental Protection Agency (EPA). | 2 CFR 200 APPENDIX II (G) | Contractor RFP/IFB<br>Contractor RFQ<br>Subrecipients |
| >$25,000 | Debarment and Suspension (Executive Orders 12549 and 12689) – A contract award (see 2 CFR 180.220) must not be made to parties listed on the governmentwide exclusions in the System for Award Management (SAM), in accordance with the OMB guidelines at 2 CFR 180 that implement Executive Orders 12549 (3 CFR part 1986 Comp., p. 189) and 12689 (3 CFR part 1989 Comp., p. 235), "Debarment and Suspension." SAM Exclusions contains the names of parties debarred, suspended, or otherwise excluded by agencies, as well as parties declared ineligible under statutory or regulatory authority other than Executive Order 12549. | 2 CFR 200 APPENDIX II (H) | Contractor RFP/IFB<br>Contractor RFQ<br>Subrecipients<br>Vendors |
| >$100,000 | Byrd Anti-Lobbying Amendment (31 U.S.C. 1352) – Contractors that apply or bid for an award exceeding $100,000 must file the required certification. Each tier certifies to the tier above that it will not and has not used Federal appropriated funds to pay any person or organization for influencing or attempting to influence an officer or employee of any agency, a member of Congress, officer or employee of Congress, or an employee of a member of Congress in connection with obtaining any Federal contract, grant or any other award covered by 31 U.S.C. 1352. Each tier must also disclose any lobbying with Non-Federal funds that takes place in connection with obtaining any Federal award. Such disclosures are forwarded from tier to tier up to the Non-Federal award. | 2 CFR 200 APPENDIX II (I) and 24 CFR §570.303 | Contractor RFP/IFB<br>Contractor RFQ<br>Subrecipients |

| THRESHOLD | PROVISION | CITATION | PROVISION APPLIES TO |
|---|---|---|---|
| | See 2 CFR §200.323 - Procurement of Recovered Materials.<br><br>Where applicable, in the performance of contract, pursuant to 2 CFR 200.323, the contractor must comply with section 6002 of the Solid Waste Disposal Act, as amended by the Resource Conservation and Recovery Act. The requirements of Section 6002 include procuring only items designated in guidelines of the Environmental Protection Agency (EPA) at 40 CFR part 247 that contain the highest percentage of recovered materials practicable, consistent with maintaining a satisfactory level of competition, where the purchase price of the item exceeds $10,000 or the value of the quantity acquired during the preceding fiscal year exceeded $10,000; procuring solid waste management services in a manner that maximizes energy and resource recovery; and establishing an affirmative procurement program for procurement of recovered materials identified in the EPA guidelines.<br><br>To the extent that the scope of work or specifications in the contract requires the contractor to provide recovered materials the scope of work or specifications are modified to require that as follows.<br><br>i. In the performance of this contract, the Contractor shall make maximum use of products containing recovered materials that are EPA-designated items unless the product cannot be acquired—<br>1. Competitively within a timeframe providing for compliance with the contract performance schedule;<br>2. Meeting contract performance requirements; or<br>3. At a reasonable price.<br>ii. Information about this requirement, along with the list of EPA-designated items, is available at EPA's Comprehensive Procurement Guidelines web site, https://www.epa.gov/smm/comprehensive-procurement-guideline-cpg-program.<br>iii. The Contractor also agrees to comply with all other applicable requirements of Section 6002 of the "Solid Waste Disposal Act." | 2 CFR 200<br>APPENDIX II (J) | Contractor RFP/IFB<br>Contractor RFQ<br>Subrecipients |
| | See 2 CFR §200.216 - Prohibition on certain telecommunications and video surveillance services or equipment<br><br>(a) Recipients and subrecipients are prohibited from obligating or expending loan or grant funds to:<br>(1) Procure or obtain;<br>(2) Extend or renew a contract to procure or obtain; or<br>(3) Enter into a contract (or extend or renew a contract) to procure or obtain equipment, services, or systems that uses covered telecommunications equipment or services as a substantial or essential component of any system, or as critical technology as part of any system. As described in Public Law 115-232, section 889, covered telecommunications equipment is telecommunications equipment produced by Huawei Technologies Company or ZTE Corporation (or any subsidiary or affiliate of such entities).<br>(i) For the purpose of public safety, security of government facilities, physical security surveillance of critical infrastructure, and other national security purposes, video surveillance and telecommunications equipment produced by Hytera Communications Corporation, Hangzhou Hikvision Digital Technology Company, or Dahua Technology Company (or any subsidiary or affiliate of such entities).<br>(ii) Telecommunications or video surveillance services provided by such entities or using such equipment.<br>(iii) Telecommunications or video surveillance equipment or services produced or provided by an entity that the Secretary of Defense, in consultation with the Director of the National Intelligence or the Director of the Federal Bureau of Investigation, reasonably believes to be an entity | 2 CFR 200<br>APPENDIX II (K) | Contractor RFP/IFB<br>Contractor RFQ<br>Subrecipients |

| THRESHOLD | PROVISION | CITATION | PROVISION APPLIES TO |
|---|---|---|---|
| | owned or controlled by, or otherwise connected to, the government of a covered foreign country.<br>(b) In implementing the prohibition under Public Law 115-232, section 889, subsection (f), paragraph (1), heads of executive agencies administering loan, grant, or subsidy programs shall prioritize available funding and technical support to assist affected businesses, institutions and organizations as is reasonably necessary for those affected entities to transition from covered communications equipment and services, to procure replacement equipment and services, and to ensure that communications service to users and customers is sustained.<br>(c) See Public Law 115-232, section 889 for additional information.<br>(d) See also § 200.471. | | |
| | See 2 CFR §200.322 - Domestic Preferences for Procurements.<br><br>(a) As appropriate and to the extent consistent with law, the Non-Federal entity should, to the greatest extent practicable under a Federal award, provide a preference for the purchase, acquisition, or use of goods, products, or materials produced in the United States (including but not limited to iron, aluminum, steel, cement, and other manufactured products). The requirements of this section must be included in all subawards including all contracts and purchase orders for work or products under this award.<br><br>(b) For purposes of this section:<br>(1) "Produced in the United States" means, for iron and steel products, that all manufacturing processes, from the initial melting stage through the application of coatings, occurred in the United States.<br>(2) "Manufactured products" means items and construction materials composed in whole or in part of non-ferrous metals such as aluminum; plastics and polymer-based products such as polyvinyl chloride pipe; aggregates such as concrete; glass, including optical fiber; and lumber. | 2 CFR 200 APPENDIX II (L) | Contractor RFP/IFB<br>Contractor RFQ<br>Subrecipients |
| | **Additional 2 CFR 200 references & Other Regulations** | | |
| None | The Federal awarding agency must establish conflict of interest policies for Federal awards. The Non-Federal entity must disclose in writing any potential conflict of interest to the Federal awarding agency or pass-through entity in accordance with applicable Federal awarding agency policy. | 2 CFR 200.112 | Contractor RFP/IFB<br>Contractor RFQ<br>Subrecipients |
| None | Contracting with HUB, small and minority businesses, women's business enterprises, and labor surplus area firms.<br>(a) The Non-Federal entity must take all necessary affirmative steps to assure that minority businesses, women's business enterprises, and labor surplus area firms are used when possible.<br>(b) Affirmative steps must include:<br>(1) Placing qualified small and minority businesses and women's business enterprises on solicitation lists;<br>(2) Assuring that small and minority businesses, and women's business enterprises are solicited whenever they are potential sources;<br>(3) Dividing total requirements, when economically feasible, into smaller tasks or quantities to permit maximum participation by small and minority businesses, and women's business enterprises;<br>(4) Establishing delivery schedules, where the requirement permits, which encourage participation by small and minority businesses, and women's | 2 CFR 200.321 | Contractor RFP/IFB<br>Contractor RFQ<br>Subrecipients |

| THRESHOLD | PROVISION | CITATION | PROVISION APPLIES TO |
|---|---|---|---|
| | business enterprises;<br>(5) Using the services and assistance, as appropriate, of such organizations as the Small Business Administration and the Minority Business Development Agency of the Department of Commerce; and<br>(6) Requiring the prime contractor, if subcontracts are to be let, to take the affirmative steps listed in paragraphs (b)(1) through (5) of this section. | | |
| >$10,000 | An NFE (Non-Federal Entity) that is a state agency or an agency of a political subdivision of a state, and the NFE's contractors must comply with Section 6002 of the Solid Waste Disposal Act.<br>Applicable NFEs must include a contract provision requiring compliance with this requirement.<br>This includes contracts awarded by a state agency or political subdivision of a state and its contractors for certain items, as designated by the EPA, with a purchase price greater than $10,000.<br>Indian Tribal Governments and nonprofit organizations are not required to comply with this provision. Additional requirements are listed below. | 2 CFR 200.323 | Contractor RFP/IFB<br>Contractor RFQ<br>Subrecipients |
| None | Financial records, supporting documents, statistical records, and all other Non-Federal entity records pertinent to a Federal award must be retained for a period of three years from the date of submission of the final expenditure report or, for Federal awards that are renewed quarterly or annually, from the date of the submission of the quarterly or annual financial report, respectively, as reported to the Federal awarding agency or pass-through entity in the case of a subrecipient. Federal awarding agencies and pass-through entities must not impose any other record retention requirements upon Non-Federal entities. **All records related to ARPA shall be maintained for 5 years per the ARPA terms, conditions, and regulations.** The only exceptions are the following:<br>(a) If any litigation, claim, or audit is started before the expiration of the 3-year period, the records must be retained until all litigation, claims, or audit findings involving the records have been resolved and final action taken. **All records related to ARPA shall be maintained for 5 years per the ARPA terms, conditions, and regulations.**<br>(b) When the Non-Federal entity is notified in writing by the Federal awarding agency, cognizant agency for audit, oversight agency for audit, cognizant agency for indirect costs, or pass-through entity to extend the retention period.<br>(c) Records for real property and equipment acquired with Federal funds must be retained for 3 years after final disposition. All records related to ARPA shall be maintained for 5 years per the ARPA terms and conditions and regulations.<br>(d) When records are transferred to or maintained by the Federal awarding agency or pass-through entity, the 3-year retention requirement is not applicable to the Non-Federal entity All records related to ARPA shall be maintained for 5 years per the ARPA terms and conditions and regulations. **All records related to ARPA shall be maintained for 5 years per the ARPA terms, conditions, and regulations.**<br>(e) Records for program income transactions after the period of performance. In some cases, recipients must report program income after the period of performance. Where there is such a requirement, the retention period for the records pertaining to the earning of the program income starts from the end of the Non-Federal entity's fiscal year in which the program income is earned.<br>(f) Indirect cost rate proposals and cost allocations plans. This paragraph applies to the following types of documents and their supporting records: Indirect cost rate computations or proposals, cost allocation plans, and any similar accounting computations of the rate at which a particular group of costs is chargeable (such as computer usage chargeback rates or composite fringe benefit rates).<br>(1) *If submitted for negotiation.* If the proposal, plan, or other computation is | 2 CFR 200.334 | Contractor RFP/IFB<br>Contractor RFQ<br>Subrecipients<br>Vendors |

| THRESHOLD | PROVISION | CITATION | PROVISION APPLIES TO |
|---|---|---|---|
| | required to be submitted to the Federal Government (or to the pass-through entity) to form the basis for negotiation of the rate, then the 3-year retention period for its supporting records starts from the date of such submission. **All records related to ARPA shall be maintained for 5 years per the ARPA terms, conditions, and regulations.**<br><br>(2) *If not submitted for negotiation*. If the proposal, plan, or other computation is not required to be submitted to the Federal Government (or to the pass-through entity) for negotiation purposes, then the 3-year retention period for the proposal, plan, or computation and its supporting records starts from the end of the fiscal year (or other accounting period) covered by the proposal, plan, or other computation. **All records related to ARPA shall be maintained for 5 years per the ARPA terms, conditions, and regulations.** | | |
| None | The Federal awarding agency and the Non-Federal entity should, whenever practicable, collect, transmit, and store Federal award-related information in open and machine-readable formats rather than in closed formats or on paper in accordance with applicable legislative requirements. A machine-readable format is a format in a standard computer language (not English text) that can be read automatically by a web browser or computer system. The Federal awarding agency or pass-through entity must always provide or accept paper versions of Federal award-related information to and from the Non-Federal entity upon request. If paper copies are submitted, the Federal awarding agency or pass-through entity must not require more than an original and two copies. When original records are electronic and cannot be altered, there is no need to create and retain paper copies. When original records are paper, electronic versions may be substituted through the use of duplication or other forms of electronic media provided that they are subject to periodic quality control reviews, provide reasonable safeguards against alteration, and remain readable. | 2 CFR 200.336 | Contractor RFP/IFB<br>Contractor RFQ<br>Subrecipients |
| None | CONTRACTS WITH COMPANIES ENGAGED IN BUSINESS WITH IRAN, SUDAN, OR FOREIGN TERRORIST ORGANIZATION PROHIBITED. A governmental entity may not enter into a governmental contract with a company that is identified on a list prepared and maintained under Section 806.051, 807.051, or 2252.153. The term "foreign terrorist organization" in this paragraph has the meaning assigned to such a term in Section 2252.151(2) of the Texas Government Code. | Texas Government Code 2252.152 | Contractor RFP/IFB<br>Contractor RFQ<br>Subrecipients |
| >$100,000 | PROVISION REQUIRED IN CONTRACT.<br>(a) This section applies only to a contract that:<br>(1) is between a governmental entity and a company with 10 or more full-time employees; and<br>(2) has a value of $100,000 or more that is to be paid wholly or partly from public funds of the governmental entity.<br>(b) A governmental entity may not enter into a contract with a company for goods or services unless the contract contains a written verification from the company that it:<br>(1) does not boycott Israel; and<br>(2) will not boycott Israel during the term of the contract. | Texas Government Code 2271 | Contractor RFP/IFB<br>Contractor RFQ<br>Subrecipients<br>Vendors |
| For Critical Infrastructure Projects | PROHIBITION ON CONTRACTS WITH CERTAIN FOREIGN-OWNED COMPANIES IN CONNECTION WITH CRITICAL INFRASTRUCTURE.<br>PROHIBITED CONTRACTS.<br>(a) A governmental entity may not enter into a contract or other agreement relating to critical infrastructure in this state with a company:<br>(1) if, under the contract or other agreement, the company would be granted direct or remote access to or control of critical infrastructure in this state, excluding access specifically allowed by the governmental entity for product | Texas Government Code, Title 10, Subtitle F, Chapter 2274.0102 | Subrecipients<br>EC 6.1 Awardees |

| THRESHOLD | PROVISION | CITATION | PROVISION APPLIES TO |
|---|---|---|---|
| | warranty and support purposes; and<br>(2) if the governmental entity knows that the company is:<br>(A) owned by or the majority of stock or other ownership interest of the company is held or controlled by:<br>(i) individuals who are citizens of China, Iran, North Korea, Russia, or a designated country; or<br>(ii) a company or other entity, including a governmental entity, that is owned or controlled by citizens of or is directly controlled by the government of China, Iran, North Korea, Russia, or a designated country; or<br>(B) headquartered in China, Iran, North Korea, Russia, or a designated country.<br>(b) The prohibition described by Subsection (a) applies regardless of whether:<br>(1) the company's or its parent company's securities are publicly traded; or<br>(2) the company or its parent company is listed on a public stock exchange as:<br>(A) a Chinese, Iranian, North Korean, or Russian company; or<br>(B) a company of a designated country. | | |
| None | Mandatory standards and policies relating to energy efficiency which are contained in the state energy conservation plan issued in compliance with the Energy Policy and Conservation Act. | 42 U.S.C. 6201 | Contractor RFP/IFB<br>Subrecipients |
| None | The Firm agrees that no otherwise qualified individual with disabilities shall, solely by reason of his/her disability, be denied the benefits of, or be subjected to discrimination, including discrimination in employment, under any program or activity receiving federal financial assistance. | Section 504 of the Rehabilitation Act of 1973, as amended. | Subrecipients |
| | **ARPA Terms & Conditions** | | |
| ARPA Terms, Conditions, & Records | 1. Use of Funds.<br>a. Recipient understands and agrees that the funds disbursed under this award may only be used in compliance with section 603(c) of the Social Security Act (the Act), Treasury's regulations implementing that section, and guidance issued by Treasury regarding the foregoing.<br>b. Recipient will determine prior to engaging in any project using this assistance that it has the institutional, managerial, and financial capability to ensure proper planning, management, and completion of such project. | Section 9901 of the American Rescue Plan Act, Pub. L. No. 117-2;<br>Section 602(b), 603(b) and/or 603(c) as applicable | Subrecipients |
| ARPA Terms, Conditions, & Records | 2. Period of Performance. The period of performance for this award begins on the date hereof and ends on December 31, 2026. As set forth in Treasury's implementing regulations, Recipients may use award funds to cover eligible costs incurred during the period that begins on March 3, 2021, and ends on December 31, 2024. | Section 9901 of the American Rescue Plan Act, Pub. L. No. 117-2;<br>Section 602(b), 603(b) and/or 603(c) as applicable | Subrecipients |
| ARPA Terms, Conditions, & Records | 3. Reporting. Recipient agrees to comply with any reporting obligations established by Treasury as they relate to this award. | Section 9901 of the American Rescue Plan Act, Pub. L. No. 117-2;<br>Section 602(b), 603(b) and/or 603(c) as applicable | Subrecipients |

| THRESHOLD | PROVISION | CITATION | PROVISION APPLIES TO |
|---|---|---|---|
| ARPA Terms, Conditions, & Records | 4. Maintenance of and Access to Records<br>a. Recipient shall maintain records and financial documents sufficient to evidence compliance with section 603(c) of the Act, Treasury's regulations implementing that section, and guidance issued by Treasury regarding the foregoing.<br>b. The Treasury Office of Inspector General and the Government Accountability Office, or their authorized representatives, shall have the right of access to records (electronic and otherwise) of Recipient in order to conduct audits or other investigations.<br>c. Records shall be maintained by Recipient for a period of five (5) years after all funds have been expended or returned to Treasury, whichever is later. | Section 9901 of the American Rescue Plan Act, Pub. L. No. 117-2;<br>Section 602(b), 603(b) and/or 603(c) as applicable | Contractor RFP/IFB<br>Contractor RFQ<br>Subrecipients<br>Vendors |
| ARPA Terms, Conditions, & Records | 5. Pre-award Costs. Pre-award costs, as defined in 2 CFR § 200.458, may not be paid with funding from this award. | Section 9901 of the American Rescue Plan Act, Pub. L. No. 117-2;<br>Section 602(b), 603(b) and/or 603(c) as applicable | Subrecipients |
| ARPA Terms, Conditions, & Records | 6. Administrative Costs. Recipient may use funds provided under this award to cover both direct and indirect costs. | Section 9901 of the American Rescue Plan Act, Pub. L. No. 117-2;<br>Section 602(b), 603(b) and/or 603(c) as applicable | Subrecipients |
| ARPA Terms, Conditions, & Records | 7. Cost Sharing. Cost sharing or matching funds are not required to be provided by Recipient. | Section 9901 of the American Rescue Plan Act, Pub. L. No. 117-2;<br>Section 602(b), 603(b) and/or 603(c) as applicable | Subrecipients |
| ARPA Terms, Conditions, & Records | 8. Conflicts of Interest. Recipient understands and agrees it must maintain a conflict of interest policy consistent with 2 CFR § 200.318(c) and that such conflict of interest policy is applicable to each activity funded under this award. Recipient and subrecipients must disclose in writing to Treasury or the pass-through entity, as appropriate, any potential conflict of interest affecting the awarded funds in accordance with 2 CFR § 200.112. | Section 9901 of the American Rescue Plan Act, Pub. L. No. 117-2;<br>Section 602(b), 603(b) and/or 603(c) as applicable | Contractor RFP/IFB<br>Contractor RFQ<br>Subrecipients<br>Vendors |
| ARPA Terms, Conditions, & Records | 9. Compliance with Applicable Law and Regulations.<br>a. Recipient agrees to comply with the requirements of section 603 of the Act, regulations adopted by Treasury pursuant to section 603(f) of the Act, and guidance issued by Treasury regarding the foregoing. Recipient also agrees to comply with all other applicable federal statutes, regulations, and executive orders, and Recipient shall provide for such compliance by other parties in any agreements it enters into with other parties relating to this award.<br>b. Federal regulations applicable to this award include, without limitation, the following:<br>i. Uniform Administrative Requirements, Cost Principles, and Audit Requirements for Federal Awards, 2 CFR Part 200, other than such provisions as Treasury may determine are inapplicable to this Award and subject to such exceptions as may be otherwise provided by Treasury. Subpart F – Audit Requirements of the Uniform Guidance, implementing the Single Audit Act, shall apply to this award.<br>ii. Universal Identifier and System for Award Management (SAM), 2 CFR Part 25, pursuant to which the award term set forth in Appendix A to 2 CFR Part 25 is | Section 9901 of the American Rescue Plan Act, Pub. L. No. 117-2;<br>Section 602(b), 603(b) and/or 603(c) as applicable | Contractor RFP/IFB<br>Contractor RFQ<br>Subrecipients<br>Vendors |

| THRESHOLD | PROVISION | CITATION | PROVISION APPLIES TO |
|---|---|---|---|
| | hereby incorporated by reference.<br>iii. Reporting Subaward and Executive Compensation Information, 2 CFR Part 170, pursuant to which the award term set forth in Appendix A to 2 CFR Part 170 is hereby incorporated by reference.<br>iv. OMB Guidelines to Agencies on Governmentwide Debarment and Suspension (Non-procurement), 2 CFR Part 180, including the requirement to include a term or condition in all lower tier covered transactions (contracts and subcontracts described in 2 CFR Part 180, subpart B) that the award is subject to 2 CFR Part 180 and Treasury's implementing regulation at 31 CFR Part 19.<br>v. Recipient Integrity and Performance Matters, pursuant to which the award term set forth in 2 CFR Part 200, Appendix XII to Part 200 is hereby incorporated by reference.<br>vi. Governmentwide Requirements for Drug-Free Workplace, 31 CFR Part 20.<br>vii. New Restrictions on Lobbying, 31 CFR Part 21.<br>viii. Uniform Relocation Assistance and Real Property Acquisitions Act of 1970 (42 U.S.C. §§ 4601-4655) and implementing regulations.<br>ix. Generally applicable federal environmental laws and regulations.<br><br>c. Statutes and regulations prohibiting discrimination applicable to this award include, without limitation, the following:<br>i. Title VI of the Civil Rights Act of 1964 (42 U.S.C. §§ 2000d et seq.) and Treasury's implementing regulations at 31 CFR Part 22, which prohibit discrimination on the basis of race, color, or national origin under programs or activities receiving federal financial assistance;<br>ii. The Fair Housing Act, Title VIII of the Civil Rights Act of 1968 (42 U.S.C. §§ 3601 et seq.), which prohibits discrimination in housing on the basis of race, color, religion, national origin, sex, familial status, or disability;<br>iii. Section 504 of the Rehabilitation Act of 1973, as amended (29 U.S.C. § 794), which prohibits discrimination on the basis of disability under any program or activity receiving federal financial assistance;<br>iv. The Age Discrimination Act of 1975, as amended (42 U.S.C. §§ 6101 et seq.), and Treasury's implementing regulations at 31 CFR Part 23, which prohibit discrimination on the basis of age in programs or activities receiving federal financial assistance; and<br>v. Title II of the Americans with Disabilities Act of 1990, as amended (42 U.S.C. §§ 12101 et seq.), which prohibits discrimination on the basis of disability under programs, activities, and services provided or made available by state and local governments or instrumentalities or agencies thereto. | | |
| ARPA Terms, Conditions, & Records | 10. Remedial Actions. In the event of Recipient's noncompliance with section 603 of the Act, other applicable laws, Treasury's implementing regulations, guidance, or any reporting or other program requirements, Treasury may impose additional conditions on the receipt of a subsequent tranche of future award funds, if any, or take other available remedies as set forth in 2 CFR § 200.339. In the case of a violation of section 603(c) of the Act regarding the use of funds, previous payments shall be subject to recoupment as provided in section 603(e) of the Act. | Section 9901 of the American Rescue Plan Act, Pub. L. No. 117-2;<br>Section 602(b), 603(b) and/or 603(c) as applicable | Subrecipients |
| ARPA Terms, Conditions, & Records | 11. Hatch Act. Recipient agrees to comply, as applicable, with requirements of the Hatch Act (5 U.S.C. §§ 1501-1508 and 7324-7328), which limit certain political activities of State or local government employees whose principal employment is in connection with an activity financed in whole or in part by this federal assistance. | Section 9901 of the American Rescue Plan Act, Pub. L. No. 117-2;<br>Section 602(b), 603(b) and/or 603(c) as applicable | Subrecipients |
| ARPA Terms, Conditions, & Records | 12. False Statements. Recipient understands that making false statements or claims in connection with this award is a violation of federal law and may result in criminal, civil, or administrative sanctions, including fines, imprisonment, civil damages and penalties, debarment from participating in federal awards or | Section 9901 of the American Rescue Plan Act, Pub. L. No. 117-2; | Contractor RFP/IFB<br>Contractor RFQ<br>Subrecipients<br>Vendors |

| THRESHOLD | PROVISION | CITATION | PROVISION APPLIES TO |
|---|---|---|---|
| | contracts, and/or any other remedy available by law. | Section 602(b), 603(b) and/or 603(c) as applicable | |
| ARPA Terms, Conditions, & Records | 13. Publications. Any publications produced with funds from this award must display the following language: "This project [is being] [was] supported, in whole or in part, by federal award number [enter project FAIN] awarded to [name of Recipient] by the U.S. Department of the Treasury." | Section 9901 of the American Rescue Plan Act, Pub. L. No. 117-2; Section 602(b), 603(b) and/or 603(c) as applicable | Subrecipients |
| ARPA Terms, Conditions, & Records | 14. Debts Owed the Federal Government.<br>a. Any funds paid to Recipient (1) in excess of the amount to which Recipient is finally determined to be authorized to retain under the terms of this award; (2) that are determined by the Treasury Office of Inspector General to have been misused; or (3) that are determined by Treasury to be subject to a repayment obligation pursuant to section 603(e) of the Act and have not been repaid by Recipient shall constitute a debt to the federal government.<br>b. Any debts determined to be owed the federal government must be paid promptly by Recipient. A debt is delinquent if it has not been paid by the date specified in Treasury's initial written demand for payment, unless other satisfactory arrangements have been made or if the Recipient knowingly or improperly retains funds that are a debt as defined in paragraph 14(a). Treasury will take any actions available to it to collect such a debt. | Section 9901 of the American Rescue Plan Act, Pub. L. No. 117-2; Section 602(b), 603(b) and/or 603(c) as applicable | Subrecipients |
| ARPA Terms, Conditions, & Records | 15. Disclaimer.<br>a. The United States expressly disclaims any and all responsibility or liability to Recipient or third persons for the actions of Recipient or third persons resulting in death, bodily injury, property damages, or any other losses resulting in any way from the performance of this award or any other losses resulting in any way from the performance of this award or any contract, or subcontract under this award.<br>b. The acceptance of this award by Recipient does not in any way establish an agency relationship between the United States and Recipient. | Section 9901 of the American Rescue Plan Act, Pub. L. No. 117-2; Section 602(b), 603(b) and/or 603(c) as applicable | Subrecipients |
| ARPA Terms, Conditions, & Records | 16. Protections for Whistleblowers.<br>a. In accordance with 41 U.S.C. § 4712, Recipient may not discharge, demote, or otherwise discriminate against an employee in reprisal for disclosing to any of the list of persons or entities provided below, information that the employee reasonably believes is evidence of gross mismanagement of a federal contract or grant, a gross waste of federal funds, an abuse of authority relating to a federal contract or grant, a substantial and specific danger to public health or safety, or a violation of law, rule, or regulation related to a federal contract (including the competition for or negotiation of a contract) or grant.<br>b. The list of persons and entities referenced in the paragraph above includes the following:<br>i. A member of Congress or a representative of a committee of Congress;<br>ii. An Inspector General;<br>iii. The Government Accountability Office;<br>iv. A Treasury employee responsible for contract or grant oversight or management;<br>v. An authorized official of the Department of Justice or other law enforcement agency;<br>vi. A court or grand jury; or<br>vii. A management official or other employee of Recipient, contractor, or subcontractor who has the responsibility to investigate, discover, or address misconduct. | Section 9901 of the American Rescue Plan Act, Pub. L. No. 117-2; Section 602(b), 603(b) and/or 603(c) as applicable | Contractor RFP/IFB<br>Contractor RFQ<br>Subrecipients<br>Vendors |

| THRESHOLD | PROVISION | CITATION | PROVISION APPLIES TO |
|---|---|---|---|
| | c. Recipient shall inform its employees in writing of the rights and remedies provided under this section, in the predominant native language of the workforce. | | |
| ARPA Terms, Conditions, & Records | 17. Increasing Seat Belt Use in the United States. Pursuant to Executive Order 13043, 62 FR 19217 (Apr. 18, 1997), Recipient should encourage its contractors to adopt and enforce on-the-job seat belt policies and programs for their employees when operating company-owned, rented or personally owned vehicles. | Section 9901 of the American Rescue Plan Act, Pub. L. No. 117-2; Section 602(b), 603(b) and/or 603(c) as applicable | Contractor RFP/IFB<br>Contractor RFQ<br>Subrecipients<br>Vendors |
| ARPA Terms, Conditions, & Records | 18. Reducing Text Messaging While Driving. Pursuant to Executive Order 13513, 74 FR 51225 (Oct. 6, 2009), Recipient should encourage its employees, subrecipients, and contractors to adopt and enforce policies that ban text messaging while driving, and Recipient should establish workplace safety policies to decrease accidents caused by distracted drivers | Section 9901 of the American Rescue Plan Act, Pub. L. No. 117-2; Section 602(b), 603(b) and/or 603(c) as applicable | Contractor RFP/IFB<br>Contractor RFQ<br>Subrecipients<br>Vendors |

# EXHIBIT C – OTHER RELEVANT INFORMATION/SPECIAL CONDITIONS

Attach any relevant specifications, e.g., municipal/state code specifications, etc., that will be applicable to this purchase.

# ATTACHMENTS

**THE FOLLOWING DOCUMENTS MUST BE COMPLETED AND INCLUDED IN THE RESPONSE PACKAGE:**

| | | |
|---|---|---|
| 1. | ATTACHMENT A | SIGNED SOLICITATION RESPONSE COVER SHEET/ACKNOWLEDGEMENT OF ADDENDA/SUBMISSION CHECKLIST |
| 2. | ATTACHMENT B | PRICING SHEET |
| 3. | ATTACHMENT C | SYSTEM FOR AWARD MANAGEMENT (SAM.GOV) RECORD SEARCH |
| 4. | ATTACHMENT D | CUSTOMER/CLIENT REFERENCES |
| 5. | ATTACHMENT E | CERTIFICATE OF INSURANCE (IF APPLICABLE) |
| 6. | ATTACHMENT F | ETHICS AND CONFLICT OF INTEREST ACKNOWLEDGEMENT |
| 7. | ATTACHMENT G | STATEMENT OF CONFLICT OF INTEREST (IF ANY) |
| 8. | ATTACHMENT H | CONFLICT OF INTEREST QUESTIONNAIRE (FORM CIQ) |
| 9. | ATTACHMENT I | DISCLOSURE OF LOBBYING ACTIVITIES SF-LLL CERTIFICATION |
| 10. | ATTACHMENT J | TEXAS ETHICS COMMISSION CERTIFICATE OF INTERESTED PARTIES (FORM 1295) |
| 11. | ATTACHMENT K | BIDDER'S CERTIFICATION |
| 12. | ATTACHMENT L | NON-COLLUSION AFFIDAVIT |

## ATTACHMENT A:

### SOLICITATION RESPONSE COVER SHEET/ACKNOWLEDGMENT OF ADDENDA/SUBMISSION CHECKLIST

| | |
|---|---|
| **Title of Solicitation:** | Pothole Patching Trailer |
| **Name of Respondent:** | Anthony Farelli |
| **Company:** | Monmouth Solutions, Inc. |
| **Mailing Address:** | 93 Butman Road |
| **City, State, Zip:** | Lowell, MA 01852 |
| **Phone Number:** | (978) 735-3968 |
| **Company Contact Email Address:** | anthony@monmouthsolutions.com |
| **Texas Vendor ID Number:** | 92-0527019 |
| **EIN/Federal Tax Identification Number:** | 92-0527019 |

**ACKNOWLEDGEMENT OF ADDENDA**

| ADDENDUM NO. | DATE ISSUED |
|---|---|
| 1 | 10/22 |
| | |
| | |
| | |

☐ Please check this box if no addenda were issued.

## ATTACHMENT A (CONTINUED)

### SOLICITATION RESPONSE COVER SHEET/ACKNOWLEDGMENT OF ADDENDA/ SUBMISSION CHECKLIST

This checklist is provided for the Respondent's use in assuring compliance with required documentation; however, it does not include all specification requirements and does not relieve the Respondent of the need to read and comply with the specifications. Your submittal of the documents attests to the fact that you have read and/or included the documents with your response.

**SUBMISSION CHECKLIST**

| CHECK FOR COMPLETION | DOCUMENTS REQUIRED FOR SUBMISSION |
|---|---|
| ☑ | A. Solicitation Response Cover Sheet/Acknowledgement of Addenda/Submission Checklist |
| ☑ | B. Pricing Sheet |
| ☑ | C. System for Award Management (SAM.gov) Record Search |
| ☑ | D. Customer/Client References |
| ☐ | E. Certificate of Insurance (if applicable) WILL PROVIDE UPON AWARD |
| ☑ | F. Ethics and Conflict of Interest Acknowledgement |
| ☑ | G. Statement of Conflicts of Interest (if any) |
| ☐<br>☑ | H. Conflict of Interest Questionnaire (Form CIQ)<br>Please check this box if the Respondent does not identify a conflict of interest and therefore, will not be submitting the Conflict of Interest Questionnaire Form CIQ. |
| ☐<br>☑ | I. Disclosure of Lobbying Activities SF-LLL Certification<br>(Required for all proposals exceeding $100,000)<br>Please check this box if the proposal does not exceed $100,000. |
| N/A | J. Texas Ethics Commission Certificate of Interested Parties (Form 1295)<br>(This is a sample and is only required to be completed by the Respondent selected for award.) |
| ☑ | K. Bidder's Certification |
| ☑ | L. Non-Collusion Affidavit |
| ☐ | |
| ☐ | |

The Respondent's authorized agent must sign this document to acknowledge having read this solicitation carefully and completely, including the list of addenda, and that the information submitted is true and correct.

| | |
|---|---|
| **AUTHORIZED AGENT NAME:** | Anthony Farelli |
| **AUTHORIZED SIGNATURE:** | Anthony Farelli |
| **TITLE OF AUTHORIZED AGENT:** | Sales Lead |
| **DATE OF SIGNATURE:** | 10/31/2024 |

## ATTACHMENT B: PRICING SHEET

Respondent shall complete and submit the following pricing sheet with the proposal response package. The Entity reserves the right to make an award on the basis of best value in the interest of the Entity. ALL PRICING MUST BE FIRM FIXED PRICING.

| ITEM | DESCRIPTION | QUANTITY | UNIT OF MEASURE | UNIT PRICE | EXTENSION |
|---|---|---|---|---|---|
| 1 | Entity should enter the description and quantity of the services/products as contained in the Scope of Work in Exhibit A | | | $144,499.00 | $144,499.00 |
| 2 | | | | $ | $ |
| 3 | | | | $ | $ |
| 4 | | | | $ | $ |
| 5 | | | | $ | $ |
| **TOTAL FIRM FIXED PRICE** | | | | | $ 144,499.00 |
| 6 | **DELIVERY** – Number of calendar days for delivery after receipt of the order: | | | 90 calendar days | |

| | |
|---|---|
| Name of Firm: | Monmouth Solutions, Inc. |
| RFP #: | LM 24-16 |
| RFP Name: | Pothole Patching Trailer |

### AUTHORIZED AGENT – SIGNATURE AND CONTACT INFORMATION

The Respondent's authorized agent must sign this document to acknowledge they read this solicitation carefully and completely, and the information submitted is true and correct.

| | |
|---|---|
| **SIGNATURE OF AUTHORIZED AGENT:** | Anthony Farelli |
| **PRINTED NAME OF AUTHORIZED AGENT:** | Anthony Farelli |
| **TITLE OF AUTHORIZED AGENT:** | Sales Lead |
| **DATE OF SIGNATURE:** | 10/31/2024 |

## ATTACHMENT C: SYSTEM FOR AWARD MANAGEMENT (SAM.GOV) RECORD SEARCH

This project is funded by Coronavirus State and Local Fiscal Recovery Funds which requires all contractors and vendors to be in good standing according to SAM.gov and the Texas State Comptroller's office.

**Verification of SAM.gov Status**

1. Respondent must not be suspended or debarred at the time of the proposal submittal. The proposal response package must include a completed Non-Debarment Certification Form located **on the next page** herein.
2. All Respondents must be pre-vetted for eligibility to perform the outlined ARPA funded scope of work. A printed screenshot from the SAM.gov website verifies whether the Vendor is excluded from contract participation at the federal level.

**Contract Award**

The ARPA Award Recipient must verify the SAM.gov status of the Respondent(s) selected for contract award prior to execution of the contract as stated in the Non-Debarment Certification Form. The final verification of the Respondent's SAM.gov status is completed prior to contract award, and in addition to the initial verification documentation provided with the proposal response submittal.

## NON-DEBARMENT CERTIFICATION FORM

| | | | |
|---|---|---|---|
| **COMPANY/ENTITY LEGAL NAME:** Monmouth Solutions, Inc. | | | |
| **STREET ADDRESS:** 93 Butman Road | | | |
| **CITY:** Lowell | **STATE:** MA | **ZIP:** 01852 | |
| **CONTACT NAME:** Anthony Farelli | | | |
| **CONTACT EMAIL:** anthony@monmouthsolutions.com | | **CONTACT PHONE:** (978) 735-3968 | |
| ***UEI #** | E474YENAVPB7 | ****TIN #** | 92-0527019 |

*Subrecipients are required to have a Unique Entity Identifier (UEI) Number prior to an award. All entities must be pre-vetted for eligibility/ability to perform the outlined ARPA funded scope of work and a record (PDF of SAM.gov screenshot) of SAM debarment clearance must be obtained prior to entering into any final contracts. **Beneficiary Entities are required to have UEI and/or TIN.

**APPLICABLE REGULATIONS: As stated in the ARPA/SLFRF Terms & Conditions:** *"OMB Guidelines to Agencies on Governmentwide Debarment and Suspension (Nonprocurement), 2 CFR Part 180, including the requirement to include a term or condition in all lower tier covered transactions (contracts and subcontracts described in 2 CFR Part 180, subpart B) that the award is subject to 2 CFR Part 180 and Treasury's implementing regulation at 31 CFR Part 19."*

**Also, Federal Executive Order (E.O.) 12549:** "Debarment" requires that contractors, beneficiaries or subrecipient organizations and their principals – who are receiving awards, using federal funds, are not debarred, suspended, proposed for debarment, declared ineligible, or voluntarily excluded by any federal department or agency from doing business with the federal government. By signing this document, you certify that your organization and its principals are not debarred. Failure to comply or attempts to edit this language may disqualify you from receiving or retaining funds. Information on debarment is available at the following website: www.sam.gov

**Be advised that we may pursue available remedies per 2 CFR 180.360 as an ARPA recipient entity:** *"If a federal agency later determines that you failed to tell the [awarding agency] that you were excluded or disqualified at the time you entered into the covered transaction with that person/awarding agency, the agency may pursue any available remedies, including suspension and debarment."*

| [INITIAL] | CERTIFICATION & SIGNATURE |
|---|---|
| AJF | **We hereby certify that we are not excluded, disqualified, or debarred from receiving federally funded awards.** |
| AJF | **We hereby confirm that if that status should change within the course of this agreement, we will provide notification immediately. Failure to do so may result in this agreement's termination and/or the repayment of funds.** |

*Your signature certifies that the information provided on this form is correct and that neither you nor your principal(s) is/are presently debarred, suspended, proposed for debarment, declared ineligible, or voluntarily excluded from participation in this transaction by any federal department or agency.*

Anthony Farelli

**SIGNATURE**

Anthony Farelli - Sales Lead — 10/31/2024

**PRINTED NAME & TITLE** — **DATE**

### FOR DEPARTMENT USE ONLY

| | | |
|---|---|---|
| SAM Debarment/Certification Record of Clearance | Yes [ ] No [✓] | Note: NO DEBARMENT |
| State of Texas Debarred Vendor List Cleared | Yes [ ] No [✓] | Note: NO DEBARMENT |
| Verified By: | Yes [✓] No [ ] | Date: 10/31/2024 |

## ATTACHMENT D: CUSTOMER/CLIENT REFERENCES

Respondents shall use Attachment D to describe a minimum of three (3) and maximum of five (5) references for jobs, and corresponding references, completed within last five (5) years.

**Respondent's Name:** Anthony Farelli

The references shall illustrate recent experience successfully completing work of a similar nature and scope as the work described in this RFP. This form may be modified as needed to comply with the requirement to document company information. ***Failure to return this attachment (or a reasonable facsimile) may result in the proposal being considered non-responsive. Failure to provide references may result in the proposal being considered non-responsive.***

**REFERENCE 1:**

| | |
|---|---|
| **Company Name:** | PLEASE REFER TO PAST PERFORMANCE SHEET FOR YOUR REFERENCES |
| **Company Address:** | |
| **Contact Name/Title/Phone:** | |
| **Contact Email:** | |
| **Contract Award Date:** | |
| **Contract Completion Date:** | |
| **Contract Project Name:** | |
| **Brief Description of Services:** | |

**REFERENCE 2:**

| | |
|---|---|
| **Company Name:** | PLEASE REFER TO PAST PERFORMANCE SHEET FOR YOUR REFERENCES |
| **Company Address:** | |
| **Contact Name/Title/Phone:** | |
| **Contact Email:** | |
| **Contract Award Date:** | |
| **Contract Completion Date:** | |
| **Contract Project Name:** | |
| **Brief Description of Services:** | |

**REFERENCE 3:**

| | |
|---|---|
| **Company Name:** | PLEASE REFER TO PAST PERFORMANCE SHEET FOR YOUR REFERENCES |
| **Company Address:** | |
| **Contact Name/Title/Phone:** | |
| **Contact Email:** | |
| **Contract Award Date:** | |
| **Contract Completion Date:** | |
| **Contract Project Name:** | |
| **Brief Description of Services:** | |

**REFERENCE 4:**

| | |
|---|---|
| **Company Name:** | PLEASE REFER TO PAST PERFORMANCE SHEET FOR YOUR REFERENCES |
| **Company Address:** | |
| **Contact Name/Title/Phone:** | |
| **Contact Email:** | |
| **Contract Award Date:** | |
| **Contract Completion Date:** | |
| **Contract Project Name:** | |
| **Brief Description of Services:** | |

**REFERENCE 5:**

| | |
|---|---|
| **Company Name:** | PLEASE REFER TO PAST PERFORMANCE SHEET FOR YOUR REFERENCES |
| **Company Address:** | |
| **Contact Name/Title/Phone:** | |
| **Contact Email:** | |
| **Contract Award Date:** | |
| **Contract Completion Date:** | |
| **Contract Project Name:** | |
| **Brief Description of Services:** | |

## ATTACHMENT E: CERTIFICATE OF INSURANCE
### (PROPOSAL RESPONDER SUPPLIES INSURANCE WITH THE PROPOSAL PACKAGE)

**INSURANCE REQUIREMENTS**

If requested, the Respondent shall supply an original, certified copy of an insurance certificate listing **the Entity** as additional insured. The successful Respondent will be required to maintain, at all times during performance of the contract, the insurance detailed below. Failure to provide this insurance certificate within the specified amount of time may result in disqualification of bid.

a. Workers' Compensation Insurance as required by laws and regulations applicable to and covering employees of Contract engaged in the performance of the work under this agreement with a limit of not less than $1,000,000.00.

b. Employers' Liability Insurance protecting Responder against common law liability, in the absence of statutory liability, for employee bodily injury arising out of the master-servant relationship with a limit of not less than $1,000,000.00.

c. Comprehensive General Liability Insurance including products/completed operation with limits of liability of not less than: Bodily Injury $1,000,000.00 per each person, $2,000,000.00 per each occurrence/ aggregate; Property Damage $1,000,000.00 per each occurrence;

d. Excess Liability Insurance Comprehensive General Liability, Comprehensive Automobile Liability and coverages afforded by the policies above, with the minimum limits of $_____ excess of specified limits.

WILL PROVIDE UPON AWARD

## ATTACHMENT K: BIDDER'S CERTIFICATION

In accordance with Texas Government Code Sections 2252.001 through 2252.004 (relating to bids by nonresident contractors), the pertinent portion of the Act has been extracted and is as follows:

1. "Nonresident bidder" refers to a person who is not a resident.
2. "Resident bidder" refers to a person whose principal place of business is in this state, including a contractor whose ultimate parent company or majority owner has its principal place of business in this state.

A governmental entity may not award a governmental contract to a nonresident bidder unless the nonresident underbids the lowest bid submitted by a responsible resident bidder by an amount that is not less than the greater of the following:

1. the amount by which a resident bidder would be required to underbid the nonresident bidder to obtain a comparable contract in the state in which the nonresident's principal place of business is located; or
2. the amount by which a resident bidder would be required to underbid the nonresident bidder to obtain a comparable contract in the state in which a majority of the manufacturing relating to the contract will be performed.

I certify that Monmouth Solutions, Inc. (Company Name) is a

☐ **Resident bidder of Texas** as defined in Section 2252.001(4), Texas Government Code,

**OR**

☑ **Nonresident bidder** as defined in Section 2252.001(3), Texas Government Code, and our principal place of business is located at Lowell, MA 01852 (City and State).

**Note: If the Respondent is an out-of-state company, a Certificate of Authority from the Secretary of State to do business in Texas must be provided.**

| | |
|---|---|
| **SIGNATURE** | Anthony Farelli |
| **NAME OF AUTHORIZED AGENT** | Anthony Farelli |
| **TITLE OF AUTHORIZED AGENT** | Sales Lead |
| **DATE** | 10/31/2024 |

## NON-COLLUSION AFFIDAVIT

STATE OF TEXAS §
§
COUNTY OF _____ §

By the signature below, the signatory for the bidder certifies that neither he/she nor the firm, corporation, partnership or institution represented by the signatory or anyone acting for the firm bidding this project has violated the antitrust laws of this State, codified at Section 15.01, *et seq.*, Texas Business and Commerce Code, or the Federal antitrust laws, nor communicated directly or indirectly the bid made to any competitor or any other person engaged in the same line of business, nor has the signatory or anyone acting for the firm, corporation or institution submitting a bid committed any other act of collusion related to the development and submission of this bid proposal.

Signature: Anthony Farelli

Printed Name: Anthony Farelli

Title: Sales Lead

Company: Monmouth Solutions, Inc.

Date: 10/31/2024

SUBSCRIBED and sworn to before me the undersigned authority by Anthony Farelli on the 31st day of October, 20 24 on behalf of said bidder.

_____
Notary Public in and for the
State of Texas

My commission expires: _____

NOW, THEREFORE, in consideration of the foregoing recitals and the terms and conditions set forth herein, the Parties hereto do mutually agree as follows:

## SECTION 1. CONTRACT ADMINISTRATION

### SECTION 1.1 CONTACT INFORMATION & NOTICES

For the purposes of this Contract, the Entity's Representative listed below will serve as the primary point of contact for the Vendor. All required reports and communication shall be directed to this liaison and other local personnel as appropriate. The Vendor shall designate a Representative to act on Vendor's behalf for all purposes, including execution of Change Orders and Requests for Payment.

Any notice or communication required or permitted to be given under this Contract must be in writing. The initial contact information of the parties, which one party may change by giving written notice to the other party, are as follows:

| | | | |
|---|---|---|---|
| **Entity Name** | City of La Marque | **Vendor Name** | Monmouth Solutions, Inc. |
| **Entity Address 1** | 1111 Bayou Road | **Vendor Address 1** | 93 Butman Rd, Lowell, MA 01852 |
| **Entity Address 2** | La Marque, Texas 77568 | **Vendor Address 2** | |
| | | | |
| **Entity Representative for Project** | | **Vendor Representative for Project** | |
| **Name** | Amanda Hobby | **Name** | Anthony Farelli |
| **Title** | Assistant Director of Public Works | **Title** | Sales Lead |
| **Phone** | (409) 795-7996 | **Phone** | (978) 735-3968 |
| **Email** | a.hobby@cityoflamarque.org | **Email** | anthony@monmouthsolutions.com |
| **Entity Billing Contact** | | **Vendor Billing Contact** | |
| **Name** | Gina Galicia | **Name** | Same |
| **Title** | Accounts Payable Clerk | **Title** | |
| **Phone** | (409) 938-9214 | **Phone** | |
| **Email** | g.galicia@cityoflamarque.org | **Email** | |

## SECTION 1.2 PARTS INCORPORATED

Parts Incorporated. In addition to the Exhibits identified below which are incorporated into this Contract, it is understood and agreed that additional terms of this Contract are to be performed in accordance with the proposal documents (scope of work, images, and specifications), submitted proposal response and related exhibits, affidavits, addendums, statutory requirements, and the ARPA Terms & Conditions.

Exhibits

| | |
|---|---|
| Exhibit A1 | Scope of Work |
| Exhibit A2 | Payment & Pricing Schedule |
| Exhibit A3 | Request for Payment |
| Exhibit B | ARPA Required Contract Provisions |
| Exhibit C | Other Relevant Information/Special Conditions for Construction |
| Exhibit D | Insurance Certificate |
| Exhibit E | Bid, Performance, and Payment Bonds |
| Exhibit F | Eligibility Verification (SAM.gov) |
| Exhibit G | Certificate of Interested Parties (Form 1295) |

## SECTION 1.4 CONTRACT DOCUMENTS

By reference, the Contract Documents consist of:

a. This Contract and all exhibits listed, contained, or referenced in this Contract.

b. All Addenda issued before the Effective Date of this Contract;

c. All Alternates accepted by the Entity before the Effective Date of this Contract;

d. All Change Orders issued after the Effective Date of this Contract; and

e. The response submitted by Vendor in response to the IFB issued by Entity for this Project.

The Contract and Exhibit Documents form the entire and integrated Contract between Entity and Vendor, and supersede all prior negotiations, representations, or agreements, written or oral. To the extent of any conflict between Vendor's Proposal and any other Contract Document, the Contract Documents shall govern.

If there is an irreconcilable difference between or among the various documents that make up the Contract Documents, the interpretation that provides for a higher quality of material and/or workmanship will prevail over all other interpretations.

### 1.4.1 Term of Contract and Delivery Schedule – Commencement of Work

Entity shall issue a Notice to Proceed (NTP) identifying the date for commencement of the Work. Vendor shall achieve substantial completion of the Work within 90 calendar days after the commencement date; as such completion date may be extended by approved Change Orders. THE TIME SET FOR COMPLETION OF THE WORK IS AN ESSENTIAL ELEMENT OF THE CONTRACT. In any event, all of the services required and performed hereunder shall be completed no later than December 31, 2024.

### 1.4.2 Pre-Existing Conditions

Vendor acknowledges that it has been provided access to the existing improvements and conditions on the Project site and that it has thoroughly investigated those conditions. Vendor's investigation was instrumental in preparing its bid to perform the Work. Vendor shall not make or be entitled to any adjustment to the Contract Time or the Contract Sum arising from Project conditions that the Vendor discovered or, in the exercise of reasonable care, should have discovered

in Vendor's investigation.

1.4.3 Liquidated Damages

Vendor and Entity agree that a breach of this Contract as to completion time will cause damage to the Entity, but further agree that such damage cannot be accurately measured. Therefore, the Parties agree that $100.00 shall be subtracted from the Contract amount for each and every calendar day that the Work or any portion of the Work remains uncompleted after the expiration of the time period specified in the Notice to Proceed, or as extended by a change order.

1.4.4 Dispute Resolution

Disputes arising under the Contract shall be submitted to a process of resolution pursuant to alternative dispute resolution practices, such as mediation, binding arbitration, or non-binding arbitration pursuant to industry standards, prior to being submitted to a court for adjudication. It is understood that the Entity shall have the right to request mediation if services being provided are deemed deficient in any way.

1.4.5 Acquisition, Merger, Sale and/or Transfer of Business, etc.

It is understood by all parties that if, during the life of the Contract, the Vendor disposes of his/her business concern by acquisition, merger, sale, and or/transfer or by any means conveys his/her interest(s) to another party, all obligations are transferred to that new party. In this event, the new vendor will be required to submit all documentation/legal instruments that were required in the original bid/contract. Any change shall be approved by the Entity, who retains the right to reject the transfer of the contract.

1.4.6 Termination of Contract For Cause

This Contract may be terminated by the Entity for cause, including any nonperformance by the Vendor; failure of the Vendor to fulfill in a timely and proper manner its obligations under this Contract; or violation of any of the covenants, agreements, or stipulations of the Contract, upon thirty (30) days' written notice to Vendor including a statement of the reasons, therefore. The determination of the Entity as to the cause of termination and the appropriateness thereof shall be final and binding upon both Entity and Vendor. Cause for termination shall include any material failure by Vendor to comply with any terms of this Contract.

a. In such event, all finished or unfinished services, documents, data, maps, studies, surveys, drawings, models, photographs, and reports prepared by the Vendor under this Contract shall, at the option of the Entity, become its property, and the Vendor shall be entitled to receive just and equitable compensation for any work satisfactorily completed hereunder.

b. Notwithstanding the above, the Vendor shall not be relieved of liability to the Entity for damages sustained by the Entity by virtue of any breach of this Contract by the Vendor, and the Entity may withhold any payments to the Vendor for the purposes of set-off until such time as the exact amount of damages due the Entity from the Vendor is determined.

c. The Vendor agrees to indemnify and hold the Entity harmless from any liability to subcontractors or suppliers concerning payment for work performed or goods supplied arising out of the lawful termination of the Contract by the Entity under this provision.

d. In case of default by the Vendor, the Entity may procure the goods or services from other sources and hold the Vendor responsible for any excess cost.

e. Continuation of the terms of the Contract beyond the fiscal year is contingent on availability of funds in the following year's budget. In the event of unavailability of such funds, the Entity reserves the right to cancel the Contract.

f. If this Contract is terminated for cause, excluding funding discontinuance or disapproval, Vendor shall have the right to attempt to cure its failure during the thirty (30) day period prior to termination to the satisfaction of the Entity at the Entity's sole discretion.

### 1.4.7 Termination of Contract For Convenience of the Entity

The Entity may terminate this Contract at any time by giving at least thirty (30) days' notice in writing to the Vendor. If the Vendor is terminated by the Entity as provided herein, the Vendor will be paid for actual services provided or delivered purchases that are determined acceptable at the sole discretion of the Entity, less payments of compensation previously made. Vendor

### 1.4.8 Post Expiration and Termination Procedures

Upon expiration or in the event of a prior termination, all remaining and unspent ARPA funds, shall immediately become the sole and separate property of the Entity and the Vendor shall perform all acts and execute all instruments necessary to transfer and assign such funds to the Entity. All finished or unfinished documents, data, studies, reports, and work products prepared by the Vendor under this Contract or with grant funds shall, at the option of the Entity, become Entity's property.

### 1.4.9 Transitional Period

In the event services are terminated by contract expiration or by voluntary termination by either the Vendor or the Entity, the Vendor shall continue all terms and conditions of said Contract for a period not to exceed thirty (30) days at the Entity's request.

### 1.4.10 Ownership of Material

The Entity shall retain all of its rights and interest in any and all documents and property, both hard copy and digital furnished by the Entity to the Vendor for the purpose of assisting the Vendor in the performance of this Contract. All such items shall be returned immediately to the Entity at the expiration or termination of the Contract or completion of any related services pursuant thereto, whichever comes first. None of the documents and/or property shall, without the written consent of the Entity, be disclosed to others or used by the Vendor or permitted by the Vendor to be used by their parties at any time except in the performance of the resulting Contract. Ownership of all data, materials and documentation originated and prepared for the Entity pursuant to this Contract shall belong exclusively to the Entity. All data, reports, computerized information, programs, and materials related to this Project shall be delivered to and become the property of the Entity upon completion of the Project. The Vendor shall not have the right to use, sell, or disclose the total of the interim or final work products, or make available to third parties, without the prior written consent of the Entity.

## SECTION 1.5 CONTRACT SUM AND PAYMENTS

The Vendor shall be compensated per the schedule below. Payment to the Vendor shall be based on satisfactory completion of identified services and/or deliverables and payment/invoicing terms as stated in the IFB, or as mutually agreed upon and contained in this Contract. Payment is expressly contingent upon the availability of ARPA funding.

### 1.5.1 Contract Sum

Entity shall pay Vendor for performance of its obligations under this Contract, including the Base Proposal and Alternate Proposals (if any), the sum of [Spelled out dollar amount here] ($000,000.00), and make payment in accordance with the provisions of this Section.

### 1.5.2 Payment & Pricing Schedule

A Payment & Pricing Schedule (see **Exhibit A2**) subdividing the Project into its respective parts (f needed), and which includes values for all items comprising the Project will serve as the basis for payments made to Vendor.

### 1.5.3 Vendor's Payment Obligations

Vendor shall promptly pay all bills for labor and material performed and furnished by others in connection with this Contract.

a. Firm shall submit an invoice upon completion of each milestone. Deliverables will be considered complete only upon inspection and written acceptance by the Entity. Each invoice shall include deliverable(s) completed and

the price for each. **The final request for reimbursement must be received by City/County no later than September 30, 2026.**

1.5.4 Request for Payment

As instructed, all payment requests must be submitted on the Request for Payment (See **Exhibit A3**) including required attachments. Notwithstanding the certification of Vendor's payment requests, the Entity or its Representative will independently review Vendor's payment requests and make a determination as to the amount properly payable to Vendor.

1.5.5 Offsets; Deductions; Withholding

a. Entity is an agency of the State of Texas and materials and services utilized in the provision of services or purchases may be exempt from state and local taxes. Vendor is responsible for taking full advantage of all tax exemptions applicable to the Project. Entity will deduct from the Requests for Payment and from the Request for Final Payment any taxes paid for materials or services that were entitled to tax exemption.

b. Amounts assessed as liquidated damages per the above Section of this Contract and other amounts to which Entity is entitled by way of setoff or recovery, if any, shall be deducted from any amounts due Vendor.

c. Notwithstanding any other contractual provision to the contrary, Entity may withhold any payment from Vendor to the extent reasonably required to protect Entity interests under any of the following circumstances: failure to perform work in accordance with Contract Documents; insufficient documentation in Application for Payment; failure to pay subcontractors, employees, hired laborers or materials suppliers; failure to obtain, renew or maintain insurance coverage as required in this Contract; failure to meet schedule requirements or other scenarios that causes the Entity, in good faith judgment, to determine that the remaining balance will not be sufficient to complete the Work in accordance with this Contract. The right to withhold payment is contingent on giving Vendor a minimum of seven (7) calendar days' written notice of specific defects or defaults and an opportunity to cure same, and on Vendor's failure to cure or to take diligent steps to cure within such seven (7) calendar days.

1.5.6 Final Payment

Vendor's request for Final Payment must not be made until all Work is completed, all requirements of the Vendor Documents have been satisfied, and Vendor delivers the services or equipment.

## SECTION 2. ENTITY RESPONSIBILITIES

**SECTION 2.1 GENERAL**

a. Entity will cooperate in a timely manner in providing information regarding its requirements.

b. Entity will review and provide final approval of the general schedule, setting the plan for milestone dates and completion or delivery.

c. If the Entity has actual knowledge of any fault or defect or non-conformance with the Specifications, the Entity shall give prompt written notice of such fault, defect, or non-conformance to Vendor.

d. The Entity may designate one or more inspectors of its own who will be given access to the Work as requested or needed. The provision of such inspectors will not reduce or lessen in any respect Vendor's responsibilities for the Work.

e. The Entity may furnish or obtain all legal, accounting, auditing, and insurance counseling services for itself as may be necessary for the Project.

## SECTION 3. SCOPE OF WORK

### SECTION 3.1 GENERAL

Vendor has overall responsibility for and shall furnish all materials, equipment, tools, and labor necessary and reasonably inferable to complete the Work, or any phase of the Work, in accordance with Entity's requirements and the terms of the Contract Documents, including the Drawings, Specifications, Addenda, details, and other documents prepared by Vendor and listed in the attached Exhibits, if applicable.

Vendor's duties as set forth herein shall at no time be in any way diminished by reason of any approval by the Entity nor shall Vendor be released from any liability by reason of such approval by Entity, it being understood that Entity at all times is ultimately relying upon Vendor's skill and knowledge in performing the services required hereunder.

### SECTION 3.2 PROJECT CONTROL

Vendor shall supervise and direct the Work and shall be solely responsible for means, methods, techniques, sequences, and procedures for the Work. Vendor shall promptly correct any defective or non-conforming Work at Vendor's sole expense and without cost to Entity.

### SECTION 3.3 SUBVENDORS

Vendor shall award and enter into all Subcontracts necessary and appropriate to provide all labor and materials for the scope of work.

a. Vendor shall monitor the Work of the Subcontractors as required and coordinate such Work with a goal to attain Substantial Completion not later than the date for Substantial Completion and at a cost not to exceed the Contract Sum.

b. Upon request, Vendor shall provide Entity with complete, unaltered copies of all Subcontracts, and all amendments thereto.

### SECTION 3.4 HUB SUBCONTRACTING PLAN

Vendor shall comply with the requirements of the HUB Subcontracting Plan and shall not make any changes to the HUB Subcontracting Plan without Entity's written approval.

### SECTION 3.5 KEY TASKS

a. Provide services and purchase of equipment in accordance with delivery schedules and other prescribed timelines herein.

b. Provide a warranty on all purchased equipment.

c. Provide excellent customer service. Firm shall be responsive to requests and communicate on a regular basis with the Entity.

d. Provide and maintain all original and copies of supporting documentation.

e. Furnish progress reporting as determined or requested by the Entity.

f. Support and assist the Entity during state/federal monitoring or auditing activities, including providing financial information, reports, and other requests that may be required.

### SECTION 3.6 SCHEDULING

Vendor is solely responsible for delivery of the services/equipment in accordance with the Contract Documents on or before the date specified in the Schedule.

### SECTION 3.7 NON-CONFORMING WORK

Entity may reject any defective or non-conforming Work on the Project of which Entity becomes aware and Vendor shall promptly correct any such defect at Vendor's own cost without increasing the Contract Sum. Upon discovering that any portion of the Work does not conform with Entity's design concept and/or requirements, including the Design Guidelines and Standard Specifications, due to an error or omission in any Construction Document materials prepared or furnished by or on behalf of Vendor, Vendor shall promptly correct such condition at no additional cost to Entity. If Vendor refuses or fails to correct (or improperly corrects) any such condition within a reasonable time after notice, Entity may cause the condition to be corrected and offset the cost of such correction against any monies owed to Vendor; provided, however, if no monies are owed Vendor at the time the condition is discovered or at the time the condition is corrected by Entity, Vendor shall promptly reimburse the Entity for all expenses incurred to correct the condition. Vendor shall warranty all corrective Work, whether performed by or through Vendor or by a third party retained by Entity in accordance with the immediately preceding sentence due to Vendor's refusal or failure to correct properly any non-conforming Work.

### SECTION 3.8 INDEMNIFICATION

Vendor covenants and agrees to indemnify, hold harmless and defend, at its own sole expense, the Entity and its officers, agents, servants, and employees from and against any and all claims or suits for property loss or damage and/or personal injury, including death, to any and all persons, of whatsoever kind or character, whether real or asserted, arising out of or in connection with the execution, performance, attempted performance, or nonperformance of the services under this Contract and/or the operations, activities, and services of the activities described herein; and Vendor hereby assumes all liability and responsibility of the entity and its officers, agents, servants, and employees for any and all claims or suits for property loss or damage and/or personal injury, including death, to any and all persons, of whatsoever kinds or character, whether real or asserted, arising out of or in connection with the execution, performance, attempted performance, or nonperformance of the services or this Contract and/or the operations, activities, and services described herein. Vendor likewise covenants and agrees to and does hereby indemnify and hold harmless entity from and against any and all injury, damage, or destruction of property of entity, arising out of or in connection with all acts or omissions of Vendor, its officers, members, agents, employees, contractors, subcontractors, invitees, licensees, and project participants. Vendor agrees to and shall release Entity, its agents, employees, officers, and legal representatives from all liability for injury, death, damage, or loss to persons or property sustained in connection with or incidental to performance of the services under this Contract.

Vendor shall require all of its contractors and subcontractors to include in its contracts and subcontracts a release and indemnity in favor of the Entity in substantially the same form as above. The indemnity and liability release provided for above shall not apply to any liability resulting from the sole negligence or fault of the Entity, its officers, agents, employees or separate Vendors, and in the event of joint and concurring negligence or fault of the Entity and Vendor, responsibility and indemnity, if any, shall be apportioned in accordance with the laws of the State of Texas, without waiving any governmental immunity available to the entity under Texas law and without waiving any defenses of the parties under Texas law.

The provisions of this section are solely for the benefit of the parties and are not intended to create or grant any rights, contractual or otherwise, to any other person or entity. This section survives termination or expiration of this Contract.

### SECTION 3.9 INSURANCE & BONDING

If applicable, Vendor shall provide Insurance and Bid, Performance, and Payment Bonds as prescribed by Entity in the Solicitation documentation and included here as **Exhibit D** and **Exhibit E.**

## SECTION 4. REQUIRED PROVISIONS

The Vendor shall comply with the following items:

### SECTION 4.1 TERMS AND CONDITIONS

The Vendor agrees to comply with the requirements of Section 503 of the American Rescue Plan Act (ARPA), regulations adopted by Treasury pursuant to Section 603(f) of the Act, and guidance issued by Treasury regarding the foregoing. Vendor also specifically agrees to comply with the ARPA Terms & Conditions attached to this Contract in **Exhibit B.**

**SECTION 4.2 DEBARMENT AND SUSPENSION**

Vendor has provided proof of registration, active/good standing, and non-debarment status in the System for Award Management. Should this status change, the Vendor must notify the Entity immediately.

**SECTION 4.3 ASSURANCES OF COMPLIANCE WITH TITLE VI**

The Vendor shall comply with Title VI of the Civil Rights Act of 1964, which prohibits recipients of federal financial assistance from excluding from a program or activity, denying benefits of, or otherwise discriminating against a person on the basis of race, color, or national origin (42 U.S.C. § 2000d et seq.), as implemented by the Department of the Treasury's Title VI regulations, 31 CFR Part 22, which are herein incorporated by reference and made a part of this contract. Title VI also includes protection to persons with "Limited English Proficiency" in any program or activity receiving federal financial assistance, 42 U.S.C. § 2000d et seq., as implemented by the Department of the Treasury's Title VI regulations, 31 CFR Part 22, and herein incorporated by reference and made a part of this contract.

**SECTION 4.4 LOBBYING CERTIFICATION & DISCLOSURE**

No Federal appropriated funds have been paid or will be paid, by or on behalf of the undersigned, to any person for influencing or attempting to influence an officer or employee of an agency, a Member of Congress, an officer or employee of Congress, or an employee of a Member of Congress in connection with the awarding of any Federal contract, the making of any Federal grant, the making of any Federal loan, the entering into of any cooperative agreement, and the extension, continuation, renewal, amendment, or modification of any Federal contract, grant, loan, or cooperative agreement.

**SECTION 4.5 ETHICS MATTERS**

Vendor and its employees, agents, representatives, and subcontractors have ready and understand the Entity's Conflict of Interest Policy, State of Texas Standards of Conduct and Conflict of Interest Provisions available at Government Code Chapter 572: Personal Financial Disclosure, Standards of Conduct, and Conflict of Interest (state.tx.us), and applicable state ethics laws and rules available. Neither Vendor nor its employees, agents, representatives, or subcontractors will assist or cause Entity employees to violate the Conflict of Interest policies, provisions described by State of Texas Standards of Conduct and Conflict of Interest Provisions, or applicable state ethics laws or rules.

**SECTION 4.6 MAINTENANCE AND ACCESS TO RECORDS**

The Vendor shall maintain records and financial documents sufficient to evidence in compliance with Section 603(c) of the Act, Treasury's regulations implementing that section, and guidance issued by Treasury regarding the foregoing.

The Treasury Office of Inspector General, the Government Accountability Office and the Texas Office of the State Comptroller, or their authorized representatives, shall have the right of access to records (electronic and otherwise) of the Vendor in order to conduct audits or other investigations and all records shall be made available upon request. Records shall be maintained by the Vendor for a period of five (5) years after all funds have been expended or returned to the Treasury, whichever is later.

## SECTION 5. MISCELLANEOUS PROVISIONS

**SECTION 5.1 GENERAL**

a. In any case one or more of the provisions contained in this Contract shall for any reason be held to be invalid, illegal, or unenforceable in any respect, such invalidity, illegality, or unenforceability shall not affect any other provision thereof and this Contract shall be construed as if such invalid, illegal, or unenforceable provision had never been contained herein.

b. If any action at law or in equity is necessary to enforce or interpret the terms of this Contract, the prevailing party shall be entitled to reasonable attorney's fees, costs, and necessary disbursements in addition to any other relief to which such party may be entitled.

c. This Contract may be amended by mutual agreement of the parties hereto and a writing to be attached to be

incorporated into this Contract.

d. Licenses, Permits, Taxes, Fees, Laws, and Regulations

i. Vendor warrants that it will obtain, maintain in effect, and pay the cost for all licenses, permits, or certifications that may be necessary for Vendor's performance of this Contract.

ii. Vendor will be responsible for the payment of all taxes, excises, fees, payroll deductions, employee benefits (if any), fines, penalties or other payments required by federal, state, or local law or regulation in connection with Vendor's performance of this Contract.

iii. Vendor will comply with and will be responsible for requiring its officers and employees to comply with all applicable federal, state, and local laws and regulations, and the rules and regulations of the Entity.

## SECTION 5.2 CAPACITY TO PERFORM

By execution of this Contract, Vendor is certifying that they have the capacity to perform and complete the Scope of Work as provided.

## SECTION 5.3 LIMITATION OF LIABILITY

Except for the obligation of Entity to pay Vendor certain fees, costs, and expenses to the extent expressly set forth in this Contract, the Entity shall have no liability to Vendor or to anyone claiming through or under Vendor by reason of the execution or performance of this Contract. Notwithstanding any obligation or liability of Entity to Vendor, no present or future partner or affiliate of the Entity or any agent, officer, director, or employee of the Entity or anyone claiming under the Entity, has or shall have any personal liability to Vendor or to anyone claiming through or under Vendor by reason of the execution or performance of this Contract.

## SECTION 5.4 ASSIGNMENT

This Contract is a personal service contract for the services of Vendor, and neither Vendor's interest in this Contract (including, but not limited to Vendor's fees due hereunder), nor Vendor's duties hereunder may be assigned or delegated to a third party except as specifically set forth in this Contract.

## SECTION 5.5 GOVERNING LAW AND VENUE

The Vendor agrees to comply with the requirements of Section 603 of the Act, regulations adopted by Treasury pursuant to Section 603(f) of the Act, and guidance issued by Treasury regarding the foregoing.

Additionally, all applicable local government codes for the State of Texas also apply to this Contract. All equipment, supplies, and work furnished under this Contract shall comply with applicable laws, ordinances, and regulations. Vendor shall obtain and pay for such permits and inspections as are required for the legal performance of this work, unless otherwise specified. Vendor shall comply with all federal and state laws and Entity's Ordinances and Codes applicable to the Vendor's operation under this Contract. These Specifications and the Contract resulting here from shall be fully governed by the laws of the State of Texas and shall be fully performable in La Marque (Entity Name), Texas, where venue for any proceeding arising hereunder will lie.

This Contract will be governed by the laws of the State of Texas without reference to its conflicts of law provisions. Venue for any suits arising from this Contract will be in a court of competent jurisdiction in Galveston County, Texas.

## SECTION 5.6 WAIVERS

No delay or omission by either Party in exercising any right or power accruing upon the non-compliance or failure of performance by the other Party of any provision of this Contract or the Contract Documents will impair any such right or power or be construed to be a waiver thereof. A waiver by either Party of any of the covenants, conditions, or agreements of this Contract or any of the Contract Documents to be performed by the other party will not be construed to be a waiver of any subsequent breach of this Contract or the Contract Documents or of any other covenant, condition or agreement contained in this Contract or the Contract Documents.

## SECTION 5.7 SEVERABILITY

If any provision of this Contract is for any reason be held invalid or unenforceable in any respect, such invalidity or unenforceability shall not affect any other provision of this Contract and this Contract will be construed as if such invalid or unenforceable provision had not been included herein.

**SECTION 5.8 NEW LAWS**

Parties agree that if there is a change in any laws, rules, or regulations affecting the performance related to this Contract and enacted after the Effective Date of this Contract, the Parties will enter into good faith negotiations to renegotiate the affected terms of this Contract.

BY: _____
(Entity Official)

_____
(Printed Name)

_____
(Title)

_____
(Date)

BY: Anthony Farelli
(Vendor's Authorized Representative)

Anthony Farelli
(Printed Name)

Sales Lead
(Title)

10/31/2024
(Date)

## SECTION 6. EXHIBITS

**THE FOLLOWING DOCUMENTS MUST BE COMPLETED AND ATTACHED TO THE CONTRACT:**

| | |
|---|---|
| Exhibit A1 | Scope of Work |
| Exhibit A2 | Payment & Pricing Schedule |
| Exhibit A3 | Request for Payment |
| Exhibit B | ARPA Required Provisions (ARPA Terms & Conditions) |
| Exhibit C | Other Relevant Information |
| Exhibit D | Insurance Certificate (if applicable) |
| Exhibit E | Bid, Performance, and Payment Bonds (if applicable) |
| Exhibit F | Eligibility Verification (SAM.gov) |
| Exhibit G | Certificate of Interested Parties (Form 1295) |

## Exhibit A1 – Scope of Work

To be populated with solicitation Scope of Work

## Exhibit A2 – Payment & Pricing Schedule

The terms for payment for the contract are as follows:

**Payment Schedule:**

Payment will be made within 30 days of a Request for Payment and only after delivery of all services and/or purchases and acceptance by the Entity.

**Pricing Schedule:**

Prices for all goods and/or services shall be all inclusive.

Entity is an agency of the State of Texas and materials and services utilized in the provision of services or purchases may be exempt from state and local taxes. Vendor is responsible for taking full advantage of all tax exemptions applicable to the Project. Entity will deduct from the Requests for Payment and from the Request for Final Payment any taxes paid for materials or services that were entitled to tax exemption.

**Lump Sum Price:** Vendor shall provide pricing in the table below to complete the scope of services contained in **Exhibit A1**, Scope of Work, in accordance with the specifications contained in this document. Costs include all applicable services (i.e. labor, materials, profit, bonding, insurance, permitting, general conditions, and other costs) to provide a turnkey product.

(Note to Entity: Component pricing should be based on the identified components of the scope of work contained in **Exhibit A1**). An example is provided below:

| SCOPE OF WORK | PRICE |
|---|---|
| | $ 144,499.00 |
| | $ |
| | $ |
| | $ |
| **TOTAL LUMP SUM PRICE (TOTAL OF ABOVE LINE ITEMS)** | $ 144,499.00 |

# Exhibit B – ARPA Required Provisions

2 CFR 200.327 Contract provisions. The Non-Federal entity's contracts should contain applicable provisions described in Appendix II to Part 200—Contract Provisions for Non-Federal Entity Contracts Under Federal Awards. The Non-Federal entity's contracts must contain the provisions described in Appendix II to Part 200—Contract Provisions for Non-Federal Entity Contracts Under Federal Awards, as applicable.

| THRESHOLD | PROVISION | CITATION | PROVISION APPLIES TO |
|---|---|---|---|
| | **2 CFR 200 Appendix II (A-L)** | | |
| >$250,000 (Simplified Acquisition Threshold) | Contracts for more than the simplified acquisition threshold, which is the inflation adjusted amount determined by the Civilian Agency Acquisition Council and the Defense Acquisition Regulations Council (Councils) as authorized by 41 U.S.C. 1908, must address administrative, contractual, or legal remedies in instances where contractors violate or breach contract terms, and provide for such sanctions and penalties as appropriate. | 2 CFR 200 APPENDIX II (A) | Contractor RFP/IFB<br>Contractor RFQ<br>Subrecipients |
| >$10,000 | All contracts in excess of $10,000 must address termination for cause and for convenience by the Non-Federal entity including the manner by which it will be affected and the basis for settlement. | 2 CFR 200 APPENDIX II (B) | Contractor RFP/IFB<br>Contractor RFQ<br>Subrecipients |
| None | Equal Employment Opportunity. Except as otherwise provided under 41 CFR Part 60, all contracts that meet the definition of "federally assisted construction contract" in 41 CFR Part 60-1.3 must include the equal opportunity clause provided under 41 CFR 60-1.4(b), in accordance with Executive Order 11246, "Equal Employment Opportunity" (30 FR 12319, 12935, 3 CFR Part, 1964-1965 Comp., p. 339), as amended by Executive Order 11375, "Amending Executive Order 11246 Relating to Equal Employment Opportunity," and implementing regulations at 41 CFR part 60, "Office of Federal Contract Compliance Programs, Equal Employment Opportunity, Department of Labor."<br>41 CFR 60-1.4 Equal opportunity clause.<br>(b) Federally assisted construction contracts. (1) Except as otherwise provided, each administering agency shall require the inclusion of the following language as a condition of any grant, contract, loan, insurance, or guarantee involving federally assisted construction which is not exempt from the requirements of the equal opportunity clause:<br>The [recipient] hereby agrees that it will incorporate or cause to be incorporated into any contract for construction work, or modification thereof, as defined in the regulations of the Secretary of Labor at 41 CFR Chapter 60, which is paid for in whole or in part with funds obtained from the Federal Government or borrowed on the credit of the Federal Government pursuant to a grant, contract, loan, insurance, or guarantee, or undertaken pursuant to any Federal program involving such grant, contract, loan, insurance, or guarantee, the following equal opportunity clause:<br>During the performance of this contract, the contractor agrees as follows:<br>(9) The contractor will not discriminate against any employee or applicant for employment because of race, color, religion, sex, sexual orientation, gender identity, or national origin. The contractor will take affirmative action to ensure that applicants are employed, and that employees are treated during employment without regard to their race, color, religion, sex, sexual orientation, gender identity, or national origin. Such action shall include, but not be limited to the following:<br>Employment, upgrading, demotion, or transfer; recruitment or recruitment advertising; layoff or termination; rates of pay or other forms of compensation; and selection for training, including apprenticeship. The contractor agrees to post in conspicuous places, available to employees and applicants for employment, notices to be provided setting forth the provisions of this nondiscrimination clause.<br>(10) The contractor will, in all solicitations or advertisements for employees placed by | 2 CFR 200 APPENDIX II (C) and 41 CFR §60-1.4(b) | Contractor RFP/IFB<br>Contractor RFQ<br>Subrecipients |

| THRESHOLD | PROVISION | CITATION | PROVISION APPLIES TO |
|---|---|---|---|
| | or on behalf of the contractor, state that all qualified applicants will receive consideration for employment without regard to race, color, religion, sex, sexual orientation, gender identity, or national origin.<br>(11) The contractor will not discharge or in any other manner discriminate against any employee or applicant for employment because such employee or applicant has inquired about, discussed, or disclosed the compensation of the employee or applicant or another employee or applicant. This provision shall not apply to instances in which an employee who has access to the compensation information of other employees or applicants as a part of such employee's essential job functions discloses the compensation of such other employees or applicants to individuals who do not otherwise have access to such information, unless such disclosure is in response to a formal complaint or charge, in furtherance of an investigation, proceeding, hearing, or action, including an investigation conducted by the employer, or is consistent with the contractor's legal duty to furnish information.<br>(12) The contractor will send to each labor union or representative of workers with which he has a collective bargaining agreement or other contract or understanding, a notice to be provided advising the said labor union or workers' representatives of the contractor's commitments under this section and shall post copies of the notice in conspicuous places available to employees and applicants for employment.<br>(13) The contractor will comply with all provisions of Executive Order 11246 of September 24, 1965, and of the rules, regulations, and relevant orders of the Secretary of Labor.<br>(14) The contractor will furnish all information and reports required by Executive Order 11246 of September 24, 1965, and by rules, regulations, and orders of the Secretary of Labor, or pursuant thereto, and will permit access to his books, records, and accounts by the administering agency and the Secretary of Labor for purposes of investigation to ascertain compliance with such rules, regulations, and orders.<br>(15) In the event of the contractor's noncompliance with the nondiscrimination clauses of this contract or with any of the said rules, regulations, or orders, this contract may be canceled, terminated, or suspended in whole or in part and the contractor may be declared ineligible for further Government contracts or federally assisted construction contracts in accordance with procedures authorized in Executive Order 11246 of September 24, 1965, and such other sanctions may be imposed and remedies invoked as provided in Executive Order 11246 of September 24, 1965, or by rule, regulation, or order of the Secretary of Labor, or as otherwise provided by law.<br>(16) The contractor will include the portion of the sentence immediately preceding paragraph (1) and the provisions of paragraphs (1) through (8) in every subcontract or purchase order unless exempted by rules, regulations, or orders of the Secretary of Labor issued pursuant to section 204 of Executive Order 11246 of September 24, 1965, so that such provisions will be binding upon each subcontractor or vendor. The contractor will take such action with respect to any subcontract or purchase order as the administering agency may direct as a means of enforcing such provisions, including sanctions for noncompliance:<br>Provided, however, that in the event a contractor becomes involved in, or is threatened with, litigation with a subcontractor or vendor as a result of such direction by the administering agency, the contractor may request the United States to enter into such litigation to protect the interests of the United States.<br>The [recipient] further agrees that it will be bound by the above equal opportunity clause with respect to its own employment practices when it participates in federally assisted construction work: Provided, that if the [recipient] so participating is a State or local government, the above equal opportunity clause is not applicable to any agency, instrumentality or subdivision of such government which does not participate in work on or under the contract.<br>The [recipient] agrees that it will assist and cooperate actively with the administering agency and the Secretary of Labor in obtaining the compliance of contractors and subcontractors with the equal opportunity clause and the rules, regulations, and | | |

| THRESHOLD | PROVISION | CITATION | PROVISION APPLIES TO |
|---|---|---|---|
| | relevant orders of the Secretary of Labor, that it will furnish the administering agency and the Secretary of Labor such information as they may require for the supervision of such compliance, and that it will otherwise assist the recipient agency in the discharge of the agency's primary responsibility for securing compliance.<br><br>The recipient further agrees that it will refrain from entering into any contract or contract modification subject to Executive Order 11246 of September 24, 1965, with a contractor debarred from, or who has not demonstrated eligibility for, Government contracts and federally assisted construction contracts pursuant to the Executive Order and will carry out such sanctions and penalties for violation of the equal opportunity clause as may be imposed upon contractors and subcontractors by the administering agency or the Secretary of Labor pursuant to Part II, Subpart D of the Executive Order. In addition, the [recipient] agrees that if it fails or refuses to comply with these undertakings, the administering agency may take any or all of the following actions: cancel, terminate, or suspend in whole or in part this grant (contract, loan, insurance, guarantee); refrain from extending any further assistance to the [recipient] under the program with respect to which the failure or refund occurred until satisfactory assurance of future compliance has been received from such [recipient]; and refer the case to the Department of Justice for appropriate legal proceedings. | | |
| >$10,000,000 for ARPA but State Provision Applies at any amount and/or<br><br>>$2,000 for CDBG/Braided Funds Projects<br><br>See TX Prevailing Wage Laws | Davis-Bacon Act, as amended (40 U.S.C. 3141-3148). When required by Federal program legislation, all prime construction contracts in excess of $10,000,00 awarded by Non-Federal entities must include a provision for compliance with the Davis-Bacon Act (40 U.S.C. 3141-3144, and 3146-3148) as supplemented by Department of Labor regulations (29 CFR Part 5, "Labor Standards Provisions Applicable to Contracts Covering Federally Financed and Assisted Construction"). In accordance with the statute, contractors must be required to pay wages to laborers and mechanics at a rate not less than the prevailing wages specified in a wage determination made by the Secretary of Labor. In addition, contractors must be required to pay wages not less than once a week. The Non-Federal entity must place a copy of the current prevailing wage determination issued by the Department of Labor in each solicitation. The decision to award a contract or subcontract must be conditioned upon the acceptance of the wage determination. The Non-Federal entity must report all suspected or reported violations to the Federal awarding agency.<br><br>The contracts must also include a provision for compliance with the Copeland "Anti-Kickback" Act (40 U.S.C. 3145), as supplemented by Department of Labor regulations (29 CFR Part 3, "Contractors and Subcontractors on Public Building or Public Work Financed in Whole or in Part by Loans or Grants from the United States"). The Act provides that each contractor or subrecipient must be prohibited from inducing, by any means, any person employed in the construction, completion, or repair of public work, to give up any part of the compensation to which he or she is otherwise entitled. The Non-Federal entity must report all suspected or reported violations to the Federal awarding agency. | 2 CFR 200 APPENDIX II (D) | Contractor RFP/IFB<br><br>Subrecipients |
| >$100,000 | Contract Work Hours and Safety Standards Act (40 U.S.C. 3701-3708). Where applicable, all contracts awarded by the Non-Federal entity in excess of $100,000 that involve the employment of mechanics or laborers must include a provision for compliance with 40 U.S.C. 3702 and 3704, as supplemented by Department of Labor regulations (29 CFR Part 5). Under 40 U.S.C. 3702 of the Act, each contractor must be required to compute the wages of every mechanic and laborer on the basis of a standard work week of 40 hours. Work in excess of the standard work week is permissible provided that the worker is compensated at a rate of not less than one and a half times the basic rate of pay for all hours worked in excess of 40 hours in the work week. The requirements of 40 U.S.C. 3704 are applicable to construction work and provide that no laborer or mechanic must be required to work in surroundings or under working conditions which are unsanitary, hazardous, or dangerous. These requirements do not apply to the purchases of supplies or materials or articles ordinarily available on the open market, or contracts for transportation or | 2 CFR 200 APPENDIX II (E) | Contractor RFP/IFB<br><br>Subrecipients |

| THRESHOLD | PROVISION | CITATION | PROVISION APPLIES TO |
|---|---|---|---|
| | transmission of intelligence. | | |
| None | Rights to Inventions Made Under a Contract or Agreement. If the Federal award meets the definition of "funding agreement" under 37 CFR § 401.2 (a) and the recipient or subrecipient wishes to enter into a contract with a small business firm or nonprofit organization regarding the substitution of parties, assignment or performance of experimental, developmental, or research work under that "funding agreement," the recipient or subrecipient must comply with the requirements of 37 CFR Part 401, "Rights to Inventions Made by Nonprofit Organizations and Small Business Firms Under Government Grants, Contracts and Cooperative Agreements," and any implementing regulations issued by the awarding agency. | 2 CFR 200 APPENDIX II (F) | Contractor RFP/IFB<br>Contractor RFQ<br>Subrecipients |
| >$150,000 | Clean Air Act (42 U.S.C. 7401-7671q.) and the Federal Water Pollution Control Act (33 U.S.C. 1251-1387), as amended – Contracts and subgrants of amounts in excess of $150,000 must contain a provision that requires the Non-Federal award to agree to comply with all applicable standards, orders or regulations issued pursuant to the Clean Air Act (42 U.S.C. 7401-7671q) and the Federal Water Pollution Control Act as amended (33 U.S.C. 1251-1387). Violations must be reported to the Federal awarding agency and the Regional Office of the Environmental Protection Agency (EPA). | 2 CFR 200 APPENDIX II (G) | Contractor RFP/IFB<br>Contractor RFQ<br>Subrecipients |
| >$25,000 | Debarment and Suspension (Executive Orders 12549 and 12689) – A contract award (see 2 CFR 180.220) must not be made to parties listed on the governmentwide exclusions in the System for Award Management (SAM), in accordance with the OMB guidelines at 2 CFR 180 that implement Executive Orders 12549 (3 CFR part 1986 Comp., p. 189) and 12689 (3 CFR part 1989 Comp., p. 235), "Debarment and Suspension." SAM Exclusions contains the names of parties debarred, suspended, or otherwise excluded by agencies, as well as parties declared ineligible under statutory or regulatory authority other than Executive Order 12549. | 2 CFR 200 APPENDIX II (H) | Contractor RFP/IFB<br>Contractor RFQ<br>Subrecipients<br>Vendors |
| >$100,000 | Byrd Anti-Lobbying Amendment (31 U.S.C. 1352) – Contractors that apply or bid for an award exceeding $100,000 must file the required certification. Each tier certifies to the tier above that it will not and has not used Federal appropriated funds to pay any person or organization for influencing or attempting to influence an officer or employee of any agency, a member of Congress, officer or employee of Congress, or an employee of a member of Congress in connection with obtaining any Federal contract, grant or any other award covered by 31 U.S.C. 1352. Each tier must also disclose any lobbying with Non-Federal funds that takes place in connection with obtaining any Federal award. Such disclosures are forwarded from tier to tier up to the Non-Federal award. | 2 CFR 200 APPENDIX II (I) and 24 CFR §570.303 | Contractor RFP/IFB<br>Contractor RFQ<br>Subrecipients |

| THRESHOLD | PROVISION | CITATION | PROVISION APPLIES TO |
|---|---|---|---|
| | See 2 CFR §200.323 - Procurement of Recovered Materials.<br><br>Where applicable, in the performance of contract, pursuant to 2 CFR 200.323, the contractor must comply with section 6002 of the Solid Waste Disposal Act, as amended by the Resource Conservation and Recovery Act. The requirements of Section 6002 include procuring only items designated in guidelines of the Environmental Protection Agency (EPA) at 40 CFR part 247 that contain the highest percentage of recovered materials practicable, consistent with maintaining a satisfactory level of competition, where the purchase price of the item exceeds $10,000 or the value of the quantity acquired during the preceding fiscal year exceeded $10,000; procuring solid waste management services in a manner that maximizes energy and resource recovery; and establishing an affirmative procurement program for procurement of recovered materials identified in the EPA guidelines.<br><br>To the extent that the scope of work or specifications in the contract requires the contractor to provide recovered materials the scope of work or specifications are modified to require that as follows.<br><br>ii. In the performance of this contract, the Contractor shall make maximum use of products containing recovered materials that are EPA-designated items unless the product cannot be acquired—<br>1. Competitively within a timeframe providing for compliance with the contract performance schedule;<br>2. Meeting contract performance requirements; or<br>3. At a reasonable price.<br>iv. Information about this requirement, along with the list of EPA-designated items, is available at EPA's Comprehensive Procurement Guidelines web site, https://www.epa.gov/smm/comprehensive-procurement-guideline-cpg-program.<br>v. The Contractor also agrees to comply with all other applicable requirements of Section 6002 of the "Solid Waste Disposal Act." | 2 CFR 200<br>APPENDIX II (J) | Contractor RFP/IFB<br>Contractor RFQ<br>Subrecipients |
| | See 2 CFR §200.216 - Prohibition on certain telecommunications and video surveillance services or equipment<br><br>(a) Recipients and subrecipients are prohibited from obligating or expending loan or grant funds to:<br>(1) Procure or obtain;<br>(2) Extend or renew a contract to procure or obtain; or<br>(3) Enter into a contract (or extend or renew a contract) to procure or obtain equipment, services, or systems that uses covered telecommunications equipment or services as a substantial or essential component of any system, or as critical technology as part of any system. As described in Public Law 115-232, section 889, covered telecommunications equipment is telecommunications equipment produced by Huawei Technologies Company or ZTE Corporation (or any subsidiary or affiliate of such entities).<br>(i) For the purpose of public safety, security of government facilities, physical security surveillance of critical infrastructure, and other national security purposes, video surveillance and telecommunications equipment produced by Hytera Communications Corporation, Hangzhou Hikvision Digital Technology Company, or Dahua Technology Company (or any subsidiary or affiliate of such entities).<br>(ii) Telecommunications or video surveillance services provided by such entities or using such equipment.<br>(iii) Telecommunications or video surveillance equipment or services produced or provided by an entity that the Secretary of Defense, in consultation with the Director of the National Intelligence or the Director of the Federal Bureau of Investigation, reasonably believes to be an entity owned or | 2 CFR 200<br>APPENDIX II (K) | Contractor RFP/IFB<br>Contractor RFQ<br>Subrecipients |

| THRESHOLD | PROVISION | CITATION | PROVISION APPLIES TO |
|---|---|---|---|
| | controlled by, or otherwise connected to, the government of a covered foreign country.<br>(b) In implementing the prohibition under Public Law 115-232, section 889, subsection (f), paragraph (1), heads of executive agencies administering loan, grant, or subsidy programs shall prioritize available funding and technical support to assist affected businesses, institutions and organizations as is reasonably necessary for those affected entities to transition from covered communications equipment and services, to procure replacement equipment and services, and to ensure that communications service to users and customers is sustained.<br>(c) See Public Law 115-232, section 889 for additional information.<br>(d) See also § 200.471. | | |
| | See 2 CFR §200.322 - Domestic Preferences for Procurements.<br><br>(a) As appropriate and to the extent consistent with law, the Non-Federal entity should, to the greatest extent practicable under a Federal award, provide a preference for the purchase, acquisition, or use of goods, products, or materials produced in the United States (including but not limited to iron, aluminum, steel, cement, and other manufactured products). The requirements of this section must be included in all subawards including all contracts and purchase orders for work or products under this award.<br><br>(b) For purposes of this section:<br>(1) "Produced in the United States" means, for iron and steel products, that all manufacturing processes, from the initial melting stage through the application of coatings, occurred in the United States.<br>(2) "Manufactured products" means items and construction materials composed in whole or in part of non-ferrous metals such as aluminum; plastics and polymer-based products such as polyvinyl chloride pipe; aggregates such as concrete; glass, including optical fiber; and lumber. | 2 CFR 200 APPENDIX II (L) | Contractor RFP/IFB<br>Contractor RFQ<br>Subrecipients |
| | **Additional 2 CFR 200 references & Other Regulations** | | |
| None | The Federal awarding agency must establish conflict of interest policies for Federal awards. The Non-Federal entity must disclose in writing any potential conflict of interest to the Federal awarding agency or pass-through entity in accordance with applicable Federal awarding agency policy. | 2 CFR 200.112 | Contractor RFP/IFB<br>Contractor RFQ<br>Subrecipients |
| None | Contracting with HUB, small and minority businesses, women's business enterprises, and labor surplus area firms.<br>(a) The Non-Federal entity must take all necessary affirmative steps to assure that minority businesses, women's business enterprises, and labor surplus area firms are used when possible.<br>(b) Affirmative steps must include:<br>(1) Placing qualified small and minority businesses and women's business enterprises on solicitation lists;<br>(2) Assuring that small and minority businesses, and women's business enterprises are solicited whenever they are potential sources;<br>(3) Dividing total requirements, when economically feasible, into smaller tasks or quantities to permit maximum participation by small and minority businesses, and women's business enterprises;<br>(4) Establishing delivery schedules, where the requirement permits, which | 2 CFR 200.321 | Contractor RFP/IFB<br>Contractor RFQ<br>Subrecipients |

| THRESHOLD | PROVISION | CITATION | PROVISION APPLIES TO |
|---|---|---|---|
| | encourage participation by small and minority businesses, and women's business enterprises;<br>(5) Using the services and assistance, as appropriate, of such organizations as the Small Business Administration and the Minority Business Development Agency of the Department of Commerce; and<br>(6) Requiring the prime contractor, if subcontracts are to be let, to take the affirmative steps listed in paragraphs (b)(1) through (5) of this section. | | |
| >$10,000 | An NFE (Non-Federal Entity) that is a state agency or an agency of a political subdivision of a state, and the NFE's contractors must comply with Section 6002 of the Solid Waste Disposal Act.<br>Applicable NFEs must include a contract provision requiring compliance with this requirement.<br>This includes contracts awarded by a state agency or political subdivision of a state and its contractors for certain items, as designated by the EPA, with a purchase price greater than $10,000.<br>Indian Tribal Governments and nonprofit organizations are not required to comply with this provision. Additional requirements are listed below. | 2 CFR 200.323 | Contractor RFP/IFB<br>Contractor RFQ<br>Subrecipients |
| None | Financial records, supporting documents, statistical records, and all other Non-Federal entity records pertinent to a Federal award must be retained for a period of three years from the date of submission of the final expenditure report or, for Federal awards that are renewed quarterly or annually, from the date of the submission of the quarterly or annual financial report, respectively, as reported to the Federal awarding agency or pass-through entity in the case of a subrecipient. Federal awarding agencies and pass-through entities must not impose any other record retention requirements upon Non-Federal entities. **All records related to ARPA shall be maintained for 5 years per the ARPA terms, conditions, and regulations.** The only exceptions are the following:<br>(a) If any litigation, claim, or audit is started before the expiration of the 3-year period, the records must be retained until all litigation, claims, or audit findings involving the records have been resolved and final action taken. **All records related to ARPA shall be maintained for 5 years per the ARPA terms, conditions, and regulations.**<br>(b) When the Non-Federal entity is notified in writing by the Federal awarding agency, cognizant agency for audit, oversight agency for audit, cognizant agency for indirect costs, or pass-through entity to extend the retention period.<br>(c) Records for real property and equipment acquired with Federal funds must be retained for 3 years after final disposition. All records related to ARPA shall be maintained for 5 years per the ARPA terms and conditions and regulations.<br>(d) When records are transferred to or maintained by the Federal awarding agency or pass-through entity, the 3-year retention requirement is not applicable to the Non-Federal entity All records related to ARPA shall be maintained for 5 years per the ARPA terms and conditions and regulations. **All records related to ARPA shall be maintained for 5 years per the ARPA terms, conditions, and regulations.**<br>(e) Records for program income transactions after the period of performance. In some cases, recipients must report program income after the period of performance. Where there is such a requirement, the retention period for the records pertaining to the earning of the program income starts from the end of the Non-Federal entity's fiscal year in which the program income is earned.<br>(f) Indirect cost rate proposals and cost allocations plans. This paragraph applies to the following types of documents and their supporting records: Indirect cost rate computations or proposals, cost allocation plans, and any similar accounting computations of the rate at which a particular group of costs is chargeable (such as computer usage chargeback rates or composite fringe benefit rates).<br>(1) *If submitted for negotiation.* If the proposal, plan, or other computation is | 2 CFR 200.334 | Contractor RFP/IFB<br>Contractor RFQ<br>Subrecipients<br>Vendors |

| THRESHOLD | PROVISION | CITATION | PROVISION APPLIES TO |
|---|---|---|---|
| | required to be submitted to the Federal Government (or to the pass-through entity) to form the basis for negotiation of the rate, then the 3-year retention period for its supporting records starts from the date of such submission. **All records related to ARPA shall be maintained for 5 years per the ARPA terms, conditions, and regulations.**<br>(2) *If not submitted for negotiation.* If the proposal, plan, or other computation is not required to be submitted to the Federal Government (or to the pass-through entity) for negotiation purposes, then the 3-year retention period for the proposal, plan, or computation and its supporting records starts from the end of the fiscal year (or other accounting period) covered by the proposal, plan, or other computation. **All records related to ARPA shall be maintained for 5 years per the ARPA terms, conditions, and regulations.** | | |
| None | The Federal awarding agency and the Non-Federal entity should, whenever practicable, collect, transmit, and store Federal award-related information in open and machine-readable formats rather than in closed formats or on paper in accordance with applicable legislative requirements. A machine-readable format is a format in a standard computer language (not English text) that can be read automatically by a web browser or computer system. The Federal awarding agency or pass-through entity must always provide or accept paper versions of Federal award-related information to and from the Non-Federal entity upon request. If paper copies are submitted, the Federal awarding agency or pass-through entity must not require more than an original and two copies. When original records are electronic and cannot be altered, there is no need to create and retain paper copies. When original records are paper, electronic versions may be substituted through the use of duplication or other forms of electronic media provided that they are subject to periodic quality control reviews, provide reasonable safeguards against alteration, and remain readable. | 2 CFR 200.336 | Contractor RFP/IFB<br>Contractor RFQ<br>Subrecipients |
| None | CONTRACTS WITH COMPANIES ENGAGED IN BUSINESS WITH IRAN, SUDAN, OR FOREIGN TERRORIST ORGANIZATION PROHIBITED. A governmental entity may not enter into a governmental contract with a company that is identified on a list prepared and maintained under Section 806.051, 807.051, or 2252.153. The term "foreign terrorist organization" in this paragraph has the meaning assigned to such a term in Section 2252.151(2) of the Texas Government Code. | Texas Government Code 2252.152 | Contractor RFP/IFB<br>Contractor RFQ<br>Subrecipients |
| >$100,000 | PROVISION REQUIRED IN CONTRACT.<br>(a) This section applies only to a contract that:<br>(1) is between a governmental entity and a company with 10 or more full-time employees; and<br>(2) has a value of $100,000 or more that is to be paid wholly or partly from public funds of the governmental entity.<br>(b) A governmental entity may not enter into a contract with a company for goods or services unless the contract contains a written verification from the company that it:<br>(1) does not boycott Israel; and<br>(2) will not boycott Israel during the term of the contract. | Texas Government Code 2271 | Contractor RFP/IFB<br>Contractor RFQ<br>Subrecipients<br>Vendors |
| For Critical Infrastructure Projects | PROHIBITION ON CONTRACTS WITH CERTAIN FOREIGN-OWNED COMPANIES IN CONNECTION WITH CRITICAL INFRASTRUCTURE.<br>PROHIBITED CONTRACTS.<br>(a) A governmental entity may not enter into a contract or other agreement relating to critical infrastructure in this state with a company:<br>(1) if, under the contract or other agreement, the company would be granted direct or remote access to or control of critical infrastructure in this state, excluding access specifically allowed by the governmental entity for product | Texas Government Code, Title 10, Subtitle F, Chapter 2274.0102 | Subrecipients<br>EC 6.1 Awardees |

| THRESHOLD | PROVISION | CITATION | PROVISION APPLIES TO |
|---|---|---|---|
| | warranty and support purposes; and<br>(2) if the governmental entity knows that the company is:<br>(A) owned by or the majority of stock or other ownership interest of the company is held or controlled by:<br>(i) individuals who are citizens of China, Iran, North Korea, Russia, or a designated country; or<br>(ii) a company or other entity, including a governmental entity, that is owned or controlled by citizens of or is directly controlled by the government of China, Iran, North Korea, Russia, or a designated country; or<br>(B) headquartered in China, Iran, North Korea, Russia, or a designated country.<br>(b) The prohibition described by Subsection (a) applies regardless of whether:<br>(1) the company's or its parent company's securities are publicly traded; or<br>(2) the company or its parent company is listed on a public stock exchange as:<br>(A) a Chinese, Iranian, North Korean, or Russian company; or<br>(B) a company of a designated country. | | |
| None | Mandatory standards and policies relating to energy efficiency which are contained in the state energy conservation plan issued in compliance with the Energy Policy and Conservation Act. | 42 U.S.C. 6201 | Contractor RFP/IFB<br>Subrecipients |
| None | The Firm agrees that no otherwise qualified individual with disabilities shall, solely by reason of his/her disability, be denied the benefits of, or be subjected to discrimination, including discrimination in employment, under any program or activity receiving federal financial assistance. | Section 504 of the Rehabilitation Act of 1973, as amended. | Subrecipients |
| | **ARPA Terms & Conditions** | | |
| ARPA Terms, Conditions, & Records | 1. Use of Funds.<br>a. Recipient understands and agrees that the funds disbursed under this award may only be used in compliance with section 603(c) of the Social Security Act (the Act), Treasury's regulations implementing that section, and guidance issued by Treasury regarding the foregoing.<br>b. Recipient will determine prior to engaging in any project using this assistance that it has the institutional, managerial, and financial capability to ensure proper planning, management, and completion of such project. | Section 9901 of the American Rescue Plan Act, Pub. L. No. 117-2;<br>Section 602(b), 603(b) and/or 603(c) as applicable | Subrecipients |
| ARPA Terms, Conditions, & Records | 2. Period of Performance. The period of performance for this award begins on the date hereof and ends on December 31, 2026. As set forth in Treasury's implementing regulations, Recipients may use award funds to cover eligible costs incurred during the period that begins on March 3, 2021, and ends on December 31, 2024. | Section 9901 of the American Rescue Plan Act, Pub. L. No. 117-2;<br>Section 602(b), 603(b) and/or 603(c) as applicable | Subrecipients |
| ARPA Terms, Conditions, & Records | 3. Reporting. Recipient agrees to comply with any reporting obligations established by Treasury as they relate to this award. | Section 9901 of the American Rescue Plan Act, Pub. L. No. 117-2;<br>Section 602(b), 603(b) and/or 603(c) as applicable | Subrecipients |

| THRESHOLD | PROVISION | CITATION | PROVISION APPLIES TO |
|---|---|---|---|
| ARPA Terms, Conditions, & Records | 4. Maintenance of and Access to Records<br>a. Recipient shall maintain records and financial documents sufficient to evidence compliance with section 603(c) of the Act, Treasury's regulations implementing that section, and guidance issued by Treasury regarding the foregoing.<br>b. The Treasury Office of Inspector General and the Government Accountability Office, or their authorized representatives, shall have the right of access to records (electronic and otherwise) of Recipient in order to conduct audits or other investigations.<br>c. Records shall be maintained by Recipient for a period of five (5) years after all funds have been expended or returned to Treasury, whichever is later. | Section 9901 of the American Rescue Plan Act, Pub. L. No. 117-2;<br>Section 602(b), 603(b) and/or 603(c) as applicable | Contractor RFP/IFB<br>Contractor RFQ<br>Subrecipients<br>Vendors |
| ARPA Terms, Conditions, & Records | 5. Pre-award Costs. Pre-award costs, as defined in 2 CFR § 200.458, may not be paid with funding from this award. | Section 9901 of the American Rescue Plan Act, Pub. L. No. 117-2;<br>Section 602(b), 603(b) and/or 603(c) as applicable | Subrecipients |
| ARPA Terms, Conditions, & Records | 6. Administrative Costs. Recipient may use funds provided under this award to cover both direct and indirect costs. | Section 9901 of the American Rescue Plan Act, Pub. L. No. 117-2;<br>Section 602(b), 603(b) and/or 603(c) as applicable | Subrecipients |
| ARPA Terms, Conditions, & Records | 7. Cost Sharing. Cost sharing or matching funds are not required to be provided by Recipient. | Section 9901 of the American Rescue Plan Act, Pub. L. No. 117-2;<br>Section 602(b), 603(b) and/or 603(c) as applicable | Subrecipients |
| ARPA Terms, Conditions, & Records | 8. Conflicts of Interest. Recipient understands and agrees it must maintain a conflict of interest policy consistent with 2 CFR § 200.318(c) and that such conflict of interest policy is applicable to each activity funded under this award. Recipient and subrecipients must disclose in writing to Treasury or the pass-through entity, as appropriate, any potential conflict of interest affecting the awarded funds in accordance with 2 CFR § 200.112. | Section 9901 of the American Rescue Plan Act, Pub. L. No. 117-2;<br>Section 602(b), 603(b) and/or 603(c) as applicable | Contractor RFP/IFB<br>Contractor RFQ<br>Subrecipients<br>Vendors |
| ARPA Terms, Conditions, & Records | 9. Compliance with Applicable Law and Regulations.<br>a. Recipient agrees to comply with the requirements of section 603 of the Act, regulations adopted by Treasury pursuant to section 603(f) of the Act, and guidance issued by Treasury regarding the foregoing. Recipient also agrees to comply with all other applicable federal statutes, regulations, and executive orders, and Recipient shall provide for such compliance by other parties in any agreements it enters into with other parties relating to this award.<br>b. Federal regulations applicable to this award include, without limitation, the following:<br>i. Uniform Administrative Requirements, Cost Principles, and Audit Requirements for Federal Awards, 2 CFR Part 200, other than such provisions as Treasury may determine are inapplicable to this Award and subject to such exceptions as may be otherwise provided by Treasury. Subpart F – Audit Requirements of the Uniform Guidance, implementing the Single Audit Act, shall apply to this award.<br>ii. Universal Identifier and System for Award Management (SAM), 2 CFR Part 25, pursuant to which the award term set forth in Appendix A to 2 CFR Part 25 is hereby incorporated by reference. | Section 9901 of the American Rescue Plan Act, Pub. L. No. 117-2;<br>Section 602(b), 603(b) and/or 603(c) as applicable | Contractor RFP/IFB<br>Contractor RFQ<br>Subrecipients<br>Vendors |

| THRESHOLD | PROVISION | CITATION | PROVISION APPLIES TO |
|---|---|---|---|
| | iii. Reporting Subaward and Executive Compensation Information, 2 CFR Part 170, pursuant to which the award term set forth in Appendix A to 2 CFR Part 170 is hereby incorporated by reference.<br>iv. OMB Guidelines to Agencies on Governmentwide Debarment and Suspension (Non-procurement), 2 CFR Part 180, including the requirement to include a term or condition in all lower tier covered transactions (contracts and subcontracts described in 2 CFR Part 180, subpart B) that the award is subject to 2 CFR Part 180 and Treasury's implementing regulation at 31 CFR Part 19.<br>v. Recipient Integrity and Performance Matters, pursuant to which the award term set forth in 2 CFR Part 200, Appendix XII to Part 200 is hereby incorporated by reference.<br>vi. Governmentwide Requirements for Drug-Free Workplace, 31 CFR Part 20. (Subrecipient Only)<br>vii. New Restrictions on Lobbying, 31 CFR Part 21.<br>viii. Uniform Relocation Assistance and Real Property Acquisitions Act of 1970 (42 U.S.C. §§ 4601-4655) and implementing regulations.<br>ix. Generally applicable federal environmental laws and regulations.<br><br>c. Statutes and regulations prohibiting discrimination applicable to this award include, without limitation, the following:<br>i. Title VI of the Civil Rights Act of 1964 (42 U.S.C. §§ 2000d et seq.) and Treasury's implementing regulations at 31 CFR Part 22, which prohibit discrimination on the basis of race, color, or national origin under programs or activities receiving federal financial assistance;<br>ii. The Fair Housing Act, Title VIII of the Civil Rights Act of 1968 (42 U.S.C. §§ 3601 et seq.), which prohibits discrimination in housing on the basis of race, color, religion, national origin, sex, familial status, or disability;<br>iii. Section 504 of the Rehabilitation Act of 1973, as amended (29 U.S.C. § 794), which prohibits discrimination on the basis of disability under any program or activity receiving federal financial assistance;<br>iv. The Age Discrimination Act of 1975, as amended (42 U.S.C. §§ 6101 et seq.), and Treasury's implementing regulations at 31 CFR Part 23, which prohibit discrimination on the basis of age in programs or activities receiving federal financial assistance; and<br>v. Title II of the Americans with Disabilities Act of 1990, as amended (42 U.S.C. §§ 12101 et seq.), which prohibits discrimination on the basis of disability under programs, activities, and services provided or made available by state and local governments or instrumentalities or agencies thereto. | | |
| ARPA Terms, Conditions, & Records | 10. Remedial Actions. In the event of Recipient's noncompliance with section 603 of the Act, other applicable laws, Treasury's implementing regulations, guidance, or any reporting or other program requirements, Treasury may impose additional conditions on the receipt of a subsequent tranche of future award funds, if any, or take other available remedies as set forth in 2 CFR § 200.339. In the case of a violation of section 603(c) of the Act regarding the use of funds, previous payments shall be subject to recoupment as provided in section 603(e) of the Act. | Section 9901 of the American Rescue Plan Act, Pub. L. No. 117-2;<br>Section 602(b), 603(b) and/or 603(c) as applicable | Subrecipients |
| ARPA Terms, Conditions, & Records | 11. Hatch Act. Recipient agrees to comply, as applicable, with requirements of the Hatch Act (5 U.S.C. §§ 1501-1508 and 7324-7328), which limit certain political activities of State or local government employees whose principal employment is in connection with an activity financed in whole or in part by this federal assistance. | Section 9901 of the American Rescue Plan Act, Pub. L. No. 117-2;<br>Section 602(b), 603(b) and/or 603(c) as applicable | Subrecipients |
| ARPA Terms, Conditions, & Records | 12. False Statements. Recipient understands that making false statements or claims in connection with this award is a violation of federal law and may result in criminal, civil, or administrative sanctions, including fines, imprisonment, civil damages and penalties, debarment from participating in federal awards or contracts, and/or any | Section 9901 of the American Rescue Plan Act, Pub. L. No. 117-2;<br>Section 602(b), | Contractor RFP/IFB<br>Contractor RFQ<br>Subrecipients<br>Vendors |

| THRESHOLD | PROVISION | CITATION | PROVISION APPLIES TO |
|---|---|---|---|
| | other remedy available by law. | 603(b) and/or 603(c) as applicable | |
| ARPA Terms, Conditions, & Records | 13. Publications. Any publications produced with funds from this award must display the following language: "This project [is being] [was] supported, in whole or in part, by federal award number [enter project FAIN] awarded to [name of Recipient] by the U.S. Department of the Treasury." | Section 9901 of the American Rescue Plan Act, Pub. L. No. 117-2; Section 602(b), 603(b) and/or 603(c) as applicable | Subrecipients |
| ARPA Terms, Conditions, & Records | 14. Debts Owed the Federal Government.<br>a. Any funds paid to Recipient (1) in excess of the amount to which Recipient is finally determined to be authorized to retain under the terms of this award; (2) that are determined by the Treasury Office of Inspector General to have been misused; or (3) that are determined by Treasury to be subject to a repayment obligation pursuant to section 603(e) of the Act and have not been repaid by Recipient shall constitute a debt to the federal government.<br>b. Any debts determined to be owed the federal government must be paid promptly by Recipient. A debt is delinquent if it has not been paid by the date specified in Treasury's initial written demand for payment, unless other satisfactory arrangements have been made or if the Recipient knowingly or improperly retains funds that are a debt as defined in paragraph 14(a). Treasury will take any actions available to it to collect such a debt. | Section 9901 of the American Rescue Plan Act, Pub. L. No. 117-2; Section 602(b), 603(b) and/or 603(c) as applicable | Subrecipients |
| ARPA Terms, Conditions, & Records | 15. Disclaimer.<br>a. The United States expressly disclaims any and all responsibility or liability to Recipient or third persons for the actions of Recipient or third persons resulting in death, bodily injury, property damages, or any other losses resulting in any way from the performance of this award or any other losses resulting in any way from the performance of this award or any contract, or subcontract under this award.<br>b. The acceptance of this award by Recipient does not in any way establish an agency relationship between the United States and Recipient. | Section 9901 of the American Rescue Plan Act, Pub. L. No. 117-2; Section 602(b), 603(b) and/or 603(c) as applicable | Subrecipients |
| ARPA Terms, Conditions, & Records | 16. Protections for Whistleblowers.<br>c. In accordance with 41 U.S.C. § 4712, Recipient may not discharge, demote, or otherwise discriminate against an employee in reprisal for disclosing to any of the list of persons or entities provided below, information that the employee reasonably believes is evidence of gross mismanagement of a federal contract or grant, a gross waste of federal funds, an abuse of authority relating to a federal contract or grant, a substantial and specific danger to public health or safety, or a violation of law, rule, or regulation related to a federal contract (including the competition for or negotiation of a contract) or grant.<br>d. The list of persons and entities referenced in the paragraph above includes the following:<br>i. A member of Congress or a representative of a committee of Congress;<br>ii. An Inspector General;<br>iii. The Government Accountability Office;<br>iv. A Treasury employee responsible for contract or grant oversight or management;<br>v. An authorized official of the Department of Justice or other law enforcement agency;<br>vi. A court or grand jury; or<br>vii. A management official or other employee of Recipient, contractor, or subcontractor who has the responsibility to investigate, discover, or address misconduct.<br>c. Recipient shall inform its employees in writing of the rights and remedies provided | Section 9901 of the American Rescue Plan Act, Pub. L. No. 117-2; Section 602(b), 603(b) and/or 603(c) as applicable | Contractor RFP/IFB<br>Contractor RFQ<br>Subrecipients<br>Vendors |

| THRESHOLD | PROVISION | CITATION | PROVISION APPLIES TO |
|---|---|---|---|
| | under this section, in the predominant native language of the workforce. | | |
| ARPA Terms, Conditions, & Records | 17. Increasing Seat Belt Use in the United States. Pursuant to Executive Order 13043, 62 FR 19217 (Apr. 18, 1997), Recipient should encourage its contractors to adopt and enforce on-the-job seat belt policies and programs for their employees when operating company-owned, rented or personally owned vehicles. | Section 9901 of the American Rescue Plan Act, Pub. L. No. 117-2; Section 602(b), 603(b) and/or 603(c) as applicable | Contractor RFP/IFB<br>Contractor RFQ<br>Subrecipients<br>Vendors |
| ARPA Terms, Conditions, & Records | 18. Reducing Text Messaging While Driving. Pursuant to Executive Order 13513, 74 FR 51225 (Oct. 6, 2009), Recipient should encourage its employees, subrecipients, and contractors to adopt and enforce policies that ban text messaging while driving, and Recipient should establish workplace safety policies to decrease accidents caused by distracted drivers | Section 9901 of the American Rescue Plan Act, Pub. L. No. 117-2; Section 602(b), 603(b) and/or 603(c) as applicable | Contractor RFP/IFB<br>Contractor RFQ<br>Subrecipients<br>Vendors |

## Exhibit C – Other Related Information

To be inserted

## Exhibit D – Insurance Certificate

To be inserted

## Exhibit E – Bid, Performance, and Payment Bonds

To be inserted

## Exhibit F – Eligibility Verification (SAM.gov)

Vendor to provide a dated printout of their active status without exclusions from SAM.gov website

## Exhibit G – Certificate of Interested Parties (Form 1295)

Form 1295 (Certificate of Interested Parties) must be completed on the Texas Ethics Commission's website as part of this project prior to contract execution. Form 1295 can be accessed here: https://www.ethics.state.tx.us/filinginfo/1295/ and must be returned with the certification number assigned after completion

**RATING SHEET – REQUEST FOR PROPOSALS (RFP)**
**COMPETITIVE PROCUREMENT FOR GENERAL SERVICES, SUPPLIES, AND/OR EQUIPMENT**

| | |
|---|---|
| Entity Name: | City of La Marque |
| IFB Title or Number: | Trailer Mounted Pothole Patcher |
| Source of Funds: | American Rescue Plan Act (ARPA) (list others) |
| Evaluator's Name: | Amanda Hobby |
| Name of Respondent: | R.B. Everett |
| Date of Rating: | November 4, 2024 |

Each evaluation committee member shall independently assess the content of each response using only the evaluation criteria and weights published in the solicitation and award points up to the maximum listed for each factor. Information necessary to assess the Respondent on these criteria may be gathered from past experience with the Respondent, from the Respondent's proposal response, and/or by contacting past/current clients (references) of the Respondent. Respondents proposing to offer specific services (if allowed in IFB) should be scored only on those services. Rate Respondent in the following areas:

**Pass/Fail Criteria**

| | Factor | Pass | Fail | Comments |
|---|---|---|---|---|
| 1. | Responsiveness of Proposal | | F | |
| 2. | Financial Stability | | F | |
| **Must pass all above areas to proceed. If a Fail is marked, stop here.** | | | | |

**Total Score (A + B + C)**

| | Factor | Maximum Points | Score | Comments |
|---|---|---|---|---|
| A. | **Understanding of Work, Experience, and Relevant Qualifications** – Experience in services similar in size and scope; total number and types of employees, skills, knowledge and abilities, company background history, number of years in providing similar services. | 20 | 0 | |
| B. | **Capacity to Perform and Delivery/Service Schedule** – Demonstrated capacity to provide goods or services within the prescribed delivery date and time. Provided references should be considered in this evaluation. | 20 | 0 | |
| C. | **Pricing** – Prices for all goods and/or services shall be all inclusive and valid for 90 days. | 60 | 60 | |
| | **TOTAL AVAILABLE POINTS** | **100** | 60 | |

**RATING SHEET – REQUEST FOR PROPOSALS (RFP)**
**COMPETITIVE PROCUREMENT FOR GENERAL SERVICES, SUPPLIES, AND/OR EQUIPMENT**

| | |
|---|---|
| Entity Name: | Trailer Mounted Pothole (R. B. Everett & Company) |
| IFB Title or Number: | |
| Source of Funds: | American Rescue Plan Act (ARPA) (list others) |
| Evaluator's Name: | Christine Turner |
| Name of Respondent: | Rob Via |
| Date of Rating: | ~~11~~ 11-4-2024 |

Each evaluation committee member shall independently assess the content of each response using only the evaluation criteria and weights published in the solicitation and award points up to the maximum listed for each factor. Information necessary to assess the Respondent on these criteria may be gathered from past experience with the Respondent, from the Respondent's proposal response, and/or by contacting past/current clients (references) of the Respondent. Respondents proposing to offer specific services (if allowed in IFB) should be scored only on those services. Rate Respondent in the following areas:

**Pass/Fail Criteria**

| | Factor | Pass | Fail | Comments |
|---|---|---|---|---|
| 1. | Responsiveness of Proposal | ✓ | | |
| 2. | Financial Stability | | ✓ | |
| **Must pass all above areas to proceed. If a Fail is marked, stop here.** | | | | |

**Total Score (A + B + C)**

| | Factor | Maximum Points | Score | Comments |
|---|---|---|---|---|
| A. | **Understanding of Work, Experience, and Relevant Qualifications** – Experience in services similar in size and scope; total number and types of employees, skills, knowledge and abilities, company background history, number of years in providing similar services. | 20 | 0 | |
| B. | **Capacity to Perform and Delivery/Service Schedule** – Demonstrated capacity to provide goods or services within the prescribed delivery date and time. Provided references should be considered in this evaluation. | 20 | 0 | |
| C. | **Pricing** – Prices for all goods and/or services shall be all inclusive and valid for 90 days. | 60 | 60 | |
| | **TOTAL AVAILABLE POINTS** | **100** | 60 | |

# City of La Marque

1111 Bayou Road
La Marque, Texas 77568

## REQUEST FOR PROPOSALS (RFP)
## COMPETITIVE PROCUREMENT FOR
## GENERAL SERVICES, SUPPLIES, AND/OR EQUIPMENT

This RFP is being supported

by federal award number [RCP-056096]

allocated to the

## City of La Marque

under the

## American Rescue Plan Act (ARPA)

## Coronavirus State and Local Fiscal Recovery Funds (SLFRF)

## by the U.S. Department of the Treasury

Prepared By: Department of Public Works

# Procurement Reference #2467

## American Rescue Plan Act (ARPA)
## Request for Proposals (RFP)

Date: October 1, 2024

Re: Request for Proposals (RFP) for Trailer Mounted Pothole Patcher with DuraPatcher Technology funded with Coronavirus State and Local Fiscal Recovery Funds (SLFRF) Allocated Under the American Rescue Plan Act (ARPA)

Dear Vendor:

The City of La Marque, hereinafter called "Entity", has received an allocation of American Rescue Plan Act (ARPA) funds, and is issuing a Request for Proposals (RFP) for a general purchases and supplies contract. The item(s) are being solicited to assist the Entity in completing and implementing programs and/or projects funded with its allocation of ARPA funds.

The Sole Point of Contact for this solicitation may provide information regarding this RFP. Refer to the **Schedule of Events and Selection Summary** in Section 1 of this document for response details.

Respondent is responsible for ensuring that their RFP response is received in a timely manner and that it contains all elements of the RFP, including all required forms and any addendums issued. Respondent should complete the Solicitation Response Cover Sheet/Acknowledgement of Addenda/Submission Checklist contained in Attachment A and all other requirements identified in the RFP. RFP responses received after the deadline will not be opened and therefore not evaluated or considered for award, regardless of whether or not the delay was outside the control of the submitting provider. The City of La Marque reserves the right to negotiate with providers submitting timely responses in accordance with state and federal procurement requirements, to reject any and all bids, and to select multiple respondents if it deems it's in the best interest of the Entity and/or desires to do so.

The Entity is an Affirmative Action/Equal Opportunity Employer. Minority Business Enterprises, Small Business Enterprises, Women Business Enterprises, and Labor Surplus Area firms are encouraged to submit bids.

**CONTENTS**


| | PAGE |
|---|---|
| **AMERICAN RESCUE PLAN ACT (ARPA) REQUEST FOR PROPOSALS (RFP)** | **2** |
| **REQUEST FOR PROPOSALS – GENERAL INFORMATION** | **4** |
| **SECTION 1 – SCHEDULE OF EVENTS AND SELECTION SUMMARY** | **4** |
| **SECTION 2 – INTRODUCTION AND GENERAL CONDITIONS** | **6** |
| **SECTION 3 – SCOPE OF WORK/TECHNICAL SPECIFICATIONS** | **9** |
| **SECTION 4 – EVALUATION CRITERIA** | **12** |
| **SECTION 5 – RESPONSE SUBMISSION REQUIREMENTS** | **14** |
| **LIST OF EXHIBITS** | **16** |
| EXHIBIT A: PROJECT SCOPE OF WORK | 17 |
| EXHIBIT B: REQUIRED CONTRACT PROVISIONS | 18 |
| EXHIBIT C: OTHER RELEVANT INFORMATION/SPECIAL CONDITIONS | 31 |
| **LIST OF ATTACHMENTS A THROUGH L** | **32** |
| ATTACHMENT A: SOLICITATION RESPONSE COVER SHEET/ACKNOWLEDGEMENT OF ADDENDA/SUBMISSION CHECKLIST | 33 |
| ATTACHMENT B: PRICING SHEET | 35 |
| ATTACHMENT C: SYSTEM FOR AWARD MANAGEMENT (SAM.GOV) RECORD SEARCH | 36 |
| ATTACHMENT D: CUSTOMER/CLIENT REFERENCES | 38 |
| ATTACHMENT E: CERTIFICATE OF INSURANCE (IF APPLICABLE) | 41 |
| ATTACHMENT F: ETHICS AND CONFLICT OF INTEREST ACKNOWLEDGEMENT | 42 |
| ATTACHMENT G: STATEMENT OF CONFLICTS OF INTEREST (IF ANY) | 43 |
| ATTACHMENT H: CONFLICT OF INTEREST QUESTIONNAIRE FORM (CIQ) | 44 |
| ATTACHMENT I: DISCLOSURE OF LOBBYING ACTIVITIES SF-LLL CERTIFICATION | 46 |
| ATTACHMENT J: TEC CERTIFICATE OF INTERESTED PARTIES (FORM 1295) | 48 |
| ATTACHMENT K: BIDDER'S CERTIFICATION | 49 |
| ATTACHMENT L: NON-COLLUSION AFFIDAVIT | 50 |
| **APPENDIX I – SAMPLE CONTRACT** | **51** |

## REQUEST FOR PROPOSALS – GENERAL INFORMATION

## SECTION 1 – SCHEDULE OF EVENTS AND SELECTION SUMMARY

### 1.1 SCHEDULE OF EVENTS – ALL DATES ARE TENTATIVE

1.1.1 The Entity reserves the right to change dates at any time. At the sole discretion of the Entity, events listed in Section 1 are subject to scheduling changes and cancellation. The Entity will make public any changes to the stated schedule.

1.1.2 All requests, questions, or other communication about this solicitation shall be made in writing and addressed to the Entity's Sole Point of Contact listed in the **Schedule of Events + Response Requirements** that follow. Only the Sole Point of Contact may be contacted regarding required elements for this RFP.

1.1.3 **Respondent must review all documents and information in the *Exhibits* section and complete the required documents in the *Attachments* section. The completed Attachments, including the signed Pricing Sheet, must be contained within the Proposal Response and submitted to the Point of Contact listed in the Schedule of Events + Response Requirements that follow.**

## SCHEDULE OF EVENTS + RESPONSE REQUIREMENTS

| SCHEDULE OF EVENTS | |
|---|---|
| **RFP NOTICE DATE:** | October 1, 2024 |
| **VENDOR QUESTIONS DUE:** | October 15, 2024, 5:00 PM CST |
| **QUESTIONS ANSWERED BY:** | October 22, 2024, 5:00 PM CST |
| **PRE-PROPOSAL CONFERENCE:**<br><br>The Entity shall reject responses submitted by firms that do not attend the mandatory pre-proposal conference. | October 10, 2024<br>http://cityoflamarque.org/bidszoom |
| **SITE VISIT:**<br><br>The Entity shall reject responses submitted by firms that do not attend the mandatory site visit. | If needed, will be scheduled. |
| **PROPOSAL DUE DATE:** | October 31, 2024, 10:00 AM CST |
| | |
| **ESTIMATED AWARD DATE:** | November 18, 2024, 6:00 PM CST |
| **RESPONSE REQUIREMENTS** | |

| QUESTIONS & ANSWERS ONLY – SOLE POINT OF CONTACT | |
|---|---|
| The Entity will allow written questions and requests for clarification of this solicitation. Questions must be submitted by email to the Sole Point of Contact listed below. Respondents' names will be removed from questions in any responses released. | |
| **SOLE POINT OF CONTACT NAME:** | City Clerk |
| **ADDRESS:** | 1111 Bayou Road La Marque, TX 77568 |
| **EMAIL:** | bids@cityoflamarque.org |
| **PHONE:** | 409-938-9259 |
| **DELIVERY OF RESPONSE PROPOSAL – POINT OF CONTACT** | |
| **For digital delivery,** the Subject Line should include Respondent's Name, RFP number, and time/due date of RFP and completed response and all attachments uploaded to the following point of contact: | |
| **NAME:** | - |
| **TITLE:** | City Clerk |
| **DELIVERY POINT:** | Bidsubmit.cityoflamarque.org |
| | |
| **If mailed or hand-delivered,** sealed proposals (an original and 3 copies) should be submitted on the original forms provided. Each response must be sealed and should be placed in a properly identified envelope with Respondent's Name, RFP number, and time/due date of RFP. | |
| **For mail or hand-delivery,** deliver response and all attachments to: | |
| **NAME:** | - |
| **TITLE:** | City Clerk |
| **ADDRESS:** | 1111 Bayou Road LaMarque, TX 77568 |

## 1.2 SELECTION OF RESPONDENT(S)

1.2.1 The Entity intends to select Respondent(s) that best meet the needs of the Entity and that provide the best overall value. The Entity reserves the right to award multiple contracts from the finalist pool of successful Respondent(s). Respondents will be rated and ranked according to the evaluation criteria set forth below. The Entity intends to enter into negotiations with the top-ranked Respondent (i.e., the most highly qualified) and attempt to negotiate a fair and reasonable price; if negotiations fail, the Entity shall formally end negotiations with that respondent and attempt to negotiate with the next most highly qualified provider. The Entity shall proceed in like manner until it has contracted with a sufficient number of providers to respond to the identified scope of work.

1.2.2 The Entity reserves the right to check references on any projects performed by the Respondent, whether provided by the Respondent or known by the Entity.

1.2.3 The Entity is not required to accept the lowest cost proposal.

1.2.4 The Entity may make such investigation as deemed necessary to determine the ability of the Respondent to perform the work, and the Respondent shall furnish to the Entity all such information by the date specified by the Entity.

1.2.5 The Entity may conduct such investigations as it deems necessary or appropriate to assist in the evaluation of any RFP response and to establish the responsibility, qualifications, and financial ability of the Respondent, their proposed subcontractors, and other persons or organizations submitted within a Respondent's response to do the work to the Entity's satisfaction within the prescribed time.

1.2.6 The Entity reserves the right to conduct interviews of short-listed Respondent(s) prior to making a final selection.

1.2.7 The Entity reserves the right to contact references as deemed necessary to complete its analysis.

**See SECTION 4 – EVALUATION CRITERIA, for additional information on how Respondents will be evaluated and selected.**

# SECTION 2 – INTRODUCTION AND GENERAL CONDITIONS

## 2.1 GENERAL DESCRIPTION OF THE SCOPE OF WORK (SOW) – SEE *SECTION 3* AND *EXHIBIT A* FOR SOW DETAILS

The Entity has received an allocation of American Rescue Plan Act (ARPA) funds and is issuing a Request for Proposals (RFP) for a general purchases and supplies contract. The item(s) are being solicited to assist the Entity in completing and implementing programs and/or projects funded with its allocation of ARPA funds.

This solicitation includes purchase of:

2.1.1 **General Description:** Examples: Trailer Mounted Pothole Patcher with DuraPatcher Technology

2.5.5 In the event that Respondent finds discrepancies in or omissions from the specifications or other documents or be in doubt as to their meaning, Respondent should at once notify the Entity Sole Point of Contact and obtain clarification prior to submitting a response.

2.5.6 All Respondents must meet or exceed the minimum specifications to be considered a valid response. The Entity reserves the right to accept or reject all or any part of any response, waive minor technicalities and award the contract either to the lowest responsible Respondent or to the Respondent who provides goods or services at the best value for the Entity.

2.5.7 The Respondent agrees to protect the Entity from claims involving infringement of patents or copyrights.

PROPRIETARY OR CONFIDENTIAL INFORMATION; TEXAS PUBLIC INFORMATION ACT: Any proprietary, trade secret, or otherwise confidential information Respondent includes in its Proposal must be clearly labeled as proprietary or confidential information, and Respondent must identify the specific exception to disclosure in the Public Information Act (PIA). Merely making a blanket claim that the entire Proposal is protected from disclosure because it contains some proprietary information is not acceptable and shall make the entire Proposal subject to release under the PIA. Any information which is not clearly identified as proprietary or confidential shall be deemed to be subject to disclosure pursuant to the PIA.

Information, documentation, and other material in connection with this Response or any resulting Contract may be subject to public disclosure under the Texas PIA, Chapter 552 of the Texas Gov't Code.

2.5.8 There is no guarantee a contract will be awarded. The Entity reserves the right to cancel this RFP at any time.

2.5.9 All proposals become public documents and are subject to public review (upon request and as allowed by law). The submission of an RFP response will constitute representation by the Respondent that it understands and has complied with the requirements of the RFP. Submission of a response indicates the RFP information provided was sufficient in scope and detail to convey understanding of anticipated terms and conditions for performance of the work.

2.5.10 RFP Respondents assume all costs of preparation of the proposal. RFP responses become the property of the Entity.

## 2.6 PROHIBITED COMMUNICATION

On issuance of this solicitation, except for the written inquiries described in Section 2.6 above, the Entity, its representative(s), or partners will not answer any questions or otherwise discuss the contents of this solicitation with any potential respondent. This restriction does not preclude discussions between affected parties for the purposes of conducting business unrelated to this solicitation. Failure to comply with these requirements may result in disqualification of respondent's solicitation response.

## 2.7 TERMINATION CONDITIONS

See Contract at **Appendix I** for Termination Conditions.

### 2.7.1 FAILURE TO ENTER INTO A CONTRACT

Should the Selected Respondent ("Vendor"), to whom the contract is awarded, fail to enter into a contract within twenty-one (21) business days, the Entity may then, at its option, retain the Vendor's bid deposit/bond (if required) and accept the bid of the next lowest responsible bidder.

## SECTION 3 – SCOPE OF WORK/TECHNICAL SPECIFICATIONS

### 3.1 MINIMUM REQUIREMENTS

3.1.1 The selected Vendor shall have no convictions or civil judgments preceding nor thereafter this solicitation rendered against Respondent for 1) commission of fraud or a criminal offense in connection with obtaining, attempting to obtain, or performing a public (federal, state or local) transaction or contract under a public transaction; 2) violation of federal or state antitrust statutes or commission of embezzlement, theft, forgery, bribery, falsification or destruction of records, making false statements, or receiving stolen property.

3.1.2 The selected Vendor shall not ever have been indicted for or otherwise criminally or civilly charged by a government entity (federal, state, or local) with commission of any of the offenses enumerated above.

3.1.3 Where applicable, Vendor's staff must meet and maintain current certifications and or licensure requirements as mandated by state law or the appropriate licensing authority.

3.1.4 Vendor must not be debarred at the time of response submission, and prior to award of a contract. The System for Award Management (SAM.gov) and the Texas Comptroller's Debarred Vendor List will be checked to ensure the Vendor is not excluded from contract participation at the federal level. If the Vendor is debarred, the Vendor's proposal will not be evaluated.

### 3.2 SCOPE OF SERVICES Construct

3.2.1 **The required products or services shall be provided in accordance with attached Exhibits:**

- **Exhibit A:** Project Scope of Work
- **Exhibit B:** ARPA Required Provisions
- **Exhibit C:** Other Relevant Information

3.2.2 **Work Orders**

During the term of any contract awarded, the Entity may request the Vendor to perform certain tasks as described in the scope, subject to a specific work order authorization. All work authorizations shall be in writing, signed by all parties, and shall include a scope of services, a list of tasks to be performed, a time schedule, a list of deliverables and such other information or special conditions as may be necessary for the work requested.

3.2.3 **Condition of Product:** New Equipment ONLY; NO re-manufactured or "gray market" items. All items must be covered by the manufacturer's warranty. The unit(s) shall be made ready for continuous operation upon delivery. Respondent is cautioned that any unit delivered to the FOB point that does not meet specifications in every aspect will not be accepted.

3.2.4 **All Parts:** All parts not specifically mentioned which are necessary for the unit to be complete and ready for operation or which are normally furnished as standard equipment shall be furnished by the vendor. All parts shall conform in strength, quality, and workmanship to the accepted standards of the industry.

3.2.5 **Manuals:** Manuals containing illustrated parts list and operating and service instructions for the units shall be delivered with units. Manuals shall outline all necessary service and operating instructions for the units delivered and provide necessary warning and safety precautions.

3.2.6 **Warranty Requirements:** The units shall be warranted against defects in material and workmanship for a standard manufacturer's warranty and shall cover 100% parts and labor for the units. Vendor shall furnish warranty and a list of warrantied repair companies to the Entity at time of delivery. The warranty begins on the date the units are determined to meet specifications and accepted by the Entity.

**3.3 DELIVERY AND ACCEPTANCE**

3.3.1 **Freight Charges:** Shipping shall be Free on Board (FOB) destination; therefore, unit prices must include all shipping, handling, fuel surcharges, and delivery fees.

3.3.2 **Delivery Schedule:** Recommended delivery not to exceed 90 calendar days from date of award; delivery terms may be a factor in determining award. Respondent must contact the Entity point of contact to schedule delivery date and time. Respondent shall provide a minimum forty-eight (48) hours' notice prior to delivery.

**3.4 DELIVERY CONTACT(S):** Respondent shall contact the Entity for delivery a minimum of one (1) week in advance to coordinate delivery.

| | |
|---|---|
| **Delivery Contact Name:** | City Clerk |
| **Phone:** | (409) 938-9259 |
| **Email:** | bids@cityoflamarque.org |

**3.5 REGISTRATION AND TITLING (when applicable):** Permanent registration and titling will be performed by **the Entity. DO NOT REGISTER ITEM**. Respondent shall supply, as applicable, dealer's tag for item for sixty (60) days from date of delivery. The original Certificate of Origin (COO) or Manufacturer's Statement of Origin (MSO) as well as the most current version of TXDMV Form 130U or Application for Texas Title with signature shall be submitted with an invoice to the Entity.

**3.6 DELIVERY DELAYS:** If delay is foreseen, Respondent shall give written notice to the Entity and must keep the Entity advised of status of order at all times. Default in promised Delivery Days After Receipt of Order (ARO) without accepted reasons or failure to meet specifications authorizes the Entity to cancel contract/Purchase Order.

**3.7 COMPLIANT PRODUCTS:** Delivery does not occur until the Respondent delivers products, materials, or services in full compliance with the specifications to Entity's FOB destination, unless delivery is specifically accepted, in whole or in part, by the Entity. Providing products, materials, or services which do not meet all specification requirements does not constitute delivery. Entity reserves the right to require new delivery or a refund in the event that materials or products not meeting specifications are discovered after payment has been made. NO SUBSTITUTIONS PERMITTED WITHOUT WRITTEN APPROVAL OF THE ENTITY.

**3.8 ACCEPTANCE:** All equipment ordered will be subject to acceptance inspection and performance testing upon receipt. Acceptance inspection and performance testing will not take more than five (5) working days, weather permitting. Respondent will be notified within this time frame of any units not

delivered in full compliance with the purchase order specifications. In the event the goods tested fail to meet or exceed all conditions and requirements of the solicitation and Contract, the goods will be rejected in whole or in part, at the State's Entity's option, and returned to the Vendor or held for disposition at the Vendor's expense. Latent defects may result in cancellation of the Contract at no expense to the Entity.

## 3.9 RECORD KEEPING

3.9.1 Respondents shall provide, enter, or upload all documentation, communications, and records including all permits, certifications, warranties, and approvals regarding all provided services/ products as instructed by the Entity.

3.9.2 Respondents shall maintain records of all events that affect, or may be expected to affect the quality, scope, or progress of the services. All records shall be retained for a period of **five (5) years** following the closeout of the Entity's federal grant.

3.9.3 **Insurance**

3.9.3.1 If applicable, an original, certified copy of an Insurance Certificate listing the Entity as additional insured, must be submitted with the Respondent's submittal **(see Attachment E for requirements).** The successful Respondent will be required to maintain at all times during performance of the Contract, the insurance detailed below.

3.9.3.2 Workers' Compensation Insurance

3.9.3.3 Employers' Liability Insurance

3.9.3.4 Comprehensive General Liability Insurance

3.9.3.5 Excess Liability Insurance, Comprehensive General Liability Insurance, Comprehensive Automobile Liability Insurance

## 3.10 TERMS AND CONDITIONS

3.10.1 **Indemnity Clause** – The Respondent agrees to indemnify and save harmless the Entity and its officers, agents, and employees from any and all claims, causes or action, and damages of every kind, for injury to or death of any person and damages, to property arising out of or in connection with the work done by Respondent under this contract, and including acts or omissions of the Entity or its officers, agents, or employees in connection with said contract.

3.10.2 **Equal Opportunity Employer** – The successful Respondent shall warrant and agree that he/she is an Equal Opportunity Employer. Should complaints of any form of discrimination, either in dispensation of the service, or within company hiring policies be substantiated, this contract may be terminated immediately.

3.10.3 **Assignment** – The successful Respondent may not assign, sell, or otherwise transfer this contract without prior written consent of the Entity.

3.10.4 **Compliance with Laws** – The Respondent agrees to comply with the requirements of Section 603 of the Act, regulations adopted by Treasury pursuant to Section 603(f) of the Act, and guidance issued by Treasury regarding the foregoing.

3.10.4.1 Additionally, all applicable local government codes for the State of Texas also apply to this contract. All equipment, supplies and work furnished under this contract shall comply with applicable laws, ordinances, and regulations. Respondent shall obtain and pay for such

permits and inspections as are required for the legal performance of this work, unless otherwise specified. Respondent shall comply with all federal and state laws and Entity's ordinances and codes applicable to the Respondent's operation under this contract. These specifications and the contract resulting here shall be fully governed by the laws of the State of Texas and shall be fully performable in Galveston County, Texas, where venue for any proceeding arising hereunder will lie.

3.10.5 **Silence of Specifications** – The apparent silence of specifications as to any detail, or the apparent omission from it or a detailed description concerning any point, shall be regarded as meaning that only the best commercial practice is to prevail and that only material and workmanship of the finest quality shall be used. All interpretations of specifications shall be made on the basis of this statement. The Respondent should request clarification from the Entity as specified in this document.

## SECTION 4 – EVALUATION CRITERIA

### 4.1 RESPONSIVENESS OF QUALIFICATIONS SUBMISSION: **Pass/Fail**

Qualifications submission shall be responsive to all material requirements that shall enable the evaluation committee to evaluate responses in accordance with the evaluation criteria to make a recommendation to Officials of the Entity.

### 4.2 FINANCIAL STABILITY OF RESPONDENT: **Pass/Fail**

Financial stability of the Respondent to successfully undertake the project and the ability to ensure performance over the duration of the contract.

### 4.3 TECHNICAL REQUIREMENTS: **100 Points Total**

Extent to which the provided service or products meets the needs of the Entity, including, but not limited to, the criteria in the evaluation matrix and in the submission requirements section and as expressed in this document.

### 4.4 EVALUATION CRITERIA:

**Solicitation responses shall be evaluated in accordance with Part 200 of the Uniform Administrative Requirements, Cost Principles, and Audit Requirements. The Entity will make the selection on the basis of demonstrated competence and qualifications; and to a Respondent that provides a fair and reasonable price.**

The Entity evaluates the responses, prepares a Bid Tabulation sheet, determines the award on the basis of fair and reasonable pricing considered to be the Best Value to the Entity.

Only responses submitted in compliance with the **Schedule of Events + Response Requirements** section and meeting qualifications will be considered. Failure to submit the required information may be cause for rejection of the bid response. The Entity reserves the right to waive informalities and minor irregularities in bids received.

**Initial Compliance Screening**

The Entity will perform an initial screening of all solicitation responses received. Unsigned solicitation responses, and solicitation responses that do not meet the minimum qualifications above and/or do not include all required forms and information may be subject to rejection without further evaluation.

**Additional Evaluation Criteria**

All solicitations will be evaluated based on Responsiveness and Price. Responsiveness means adhering to the Terms and Conditions and specifications of the supplies requested. See additional evaluation criteria under Exhibit A.

***Evaluation Process:*** *The Entity's Evaluator(s) completes an evaluation of the submitted proposal using the criteria described below.* ***The proposal submitted must be a firm-fixed price.***

**EVALUATION CRITERIA**

| EVALUATION CRITERIA | SCORE |
|---|---|
| Responsiveness of Proposal | Pass/Fail |
| Financial Stability | Pass/Fail |
| Understanding of Work; Experience and Qualifications | 20 |
| Capacity to Perform, Delivery/Service Schedule, and References | 20 |
| Pricing | 60 |
| TOTAL SCORE | 100 |

## SECTION 5 – RESPONSE SUBMISSION REQUIREMENTS

This section details the requirements for submitting all required information. Respondents are advised to see **Schedule of Events + Response Requirements** on Page 4 of this document, and to carefully review all the requirements and submit all documents and information as indicated in this RFP. Additional information may be requested for clarification. Incomplete responses may lead to a submission being deemed nonresponsive and will not be considered.

To ensure some degree of uniformity in the submission, please follow the outline listed below.

### 5.1 STATEMENT OF INTEREST

The statement of interest should be limited to a maximum of two (2) pages and must include a brief introduction of the company, a statement of the Respondent's understanding of the work to be performed and that the company meets and will comply with the requirements set forth in this document.

### 5.2 EXPERIENCE AND RELEVANT QUALIFICATIONS

Respondent shall demonstrate related professional qualifications, experience, and knowledge similar to this scope of work. Response should include information similar in scope and size to the scope of work in this RFP. Limit to four (4) pages. Minimum submission shall address the following:

5.2.1 **Experience** – Respondents shall provide a concise narrative description of their firm's experience in services similar in size and scope to the requested scope of services. Describe any work performed in or for the Entity. Respondents shall provide descriptions of at least three (3) projects of similar size and scope to this Program. Projects should include project location, duration and project description and scope of work the Respondent performed.

5.2.2 **Relevant Qualifications** – Respondents must provide a brief summary to include total number and types of employees, skills, knowledge and abilities, company background history, and number of years in providing similar services as outlined in this document.

### 5.3 CAPACITY TO PERFORM

Respondent should state its firm commitment to provide goods or services within the prescribed delivery date and time.

5.3.1 **Work Capacity:** Respondent shall provide information to demonstrate capacity to perform requested work. Respondents shall provide a detailed typical schedule to show sequence of key work activities and the number of days to complete each task.

5.3.4 If applicable, **Bonding Capacity:** Respondent(s) shall provide proof of bonding capacity in a statement addressed to the Entity from a certified bonding company authorized to do business in the State of Texas. The letter must clearly state the amount of Firm's bonding capacity to be reserved for the Entity's projects. Firm shall carry a minimum bonding capacity of the project value upon execution of the Contract. The bond(s) must be made payable to the Entity. In your response, please provide a statement regarding your ability to provide proof of bonding as directed in the Exhibits that follow.

**5.4 FINANCIAL STABILITY**

Respondent shall provide a statement that includes the following:

5.4.1 A full disclosure of any events, liabilities, or contingent liabilities that could affect Respondent's financial ability to perform this contract; and

5.4.2 Other financial information sufficient for the Entity, in its sole judgement, to determine if Respondent is financially solvent or adequately capitalized.

**5.5 LEGAL ACTIONS**

Provide a list of all pending litigation and include a brief description of the reason for legal action (if applicable).

**5.6 PRICING**

5.6.1 Respondents shall complete and submit the Pricing Sheet (see **Attachment B**).

5.6.2 Prices for all goods and/or services shall be all inclusive. Pricing offered shall be valid for ninety (90) days from response due date.

5.6.3 The City of La Marque is exempt from taxes. DO NOT INCLUDE TAX IN YOUR PRICING SUBMITTAL.

5.6.4 Estimated Quantities – Quantities indicated are estimated based upon the best available information. The Entity reserves the right to increase or decrease the quantities by any amount deemed necessary to meet its needs without any adjustments in the bid price.

See additional pricing criteria under Exhibit A, Options

# LIST OF EXHIBITS

| | |
|---|---|
| EXHIBIT A | PROJECT SCOPE OF WORK |
| EXHIBIT B | REQUIRED CONTRACT PROVISIONS |
| EXHIBIT C | OTHER RELEVANT INFORMATION/SPECIAL CONDITIONS |

# EXHIBIT A – PROJECT SCOPE OF WORK

To be provided by the Entity

| Item | Description | Quantity | Unit of Measure |
|---|---|---|---|
| 1 | Trailer Mounted Pothole Patcher with DuraPatcher Technology | 1 | See Below |
| 2 | | | |
| 3 | | | |
| 4 | | | |
| 5 | **DELIVERY LOCATION: Provide the Delivery Location** | 1500 Municipal Drive, La Marque, Texas 77568 | |
| 6 | **DELIVERY SCHEDULE: Provide the number of calendar days required for delivery after receipt of the order** | 90 days | |

**Basic Specifications for a Spray Injection Patching Truck:**

**Purpose:**
These specifications shall be construed as the minimum acceptable standards for a trailer mounted pothole patcher using a tow vehicle with aggregate supply. Should the manufacturer's current published data or specifications exceed these standards, the manufacturer's standards shall be considered minimum and shall be furnished. All integral parts not specifically mentioned in the scope of these specifications that are necessary to provide a complete working unit shall be furnished. Additionally, the machine for bid offered shall include all standard manufacturer's equipment. The one-man pothole patcher must be a new current production model and shall meet all EPA applicable standards at the time of manufacture.

The use of specific names and numbers in the specification is not intended to restrict the bidder or any seller or manufacturer, but is intended solely for the purpose of indicating the type, size and quality of equipment considered best adapted to the uses of city participating in this bid.

**Bidder Price:**
The bid price shall include all destination charges, delivery charges, title fees, rebates, and all other applicable costs and refunds.

**MANUALS**
Each unit will be provided with one (1) copy of the operator's manuals, one (1) copy of the current parts manuals and (1) copy of the repair manual. Units will not be accepted for delivery until the manuals as outlined above are received by the purchaser.

**Warranty:**
Units purchased under this specification shall be warranted against defects in materials and workmanship for a period of not less than one year from date of delivery to customer. Items thought to be defective will be returned to factory prepaid to be repaired or replaced. The manufacturer shall warranty the equipment for a period of one year. Engine must be covered for Major Components for a period of 2 years or 2000 hours. Bidder warranty policy must be included with bid submittal

**Basic Minimum Requirements:**
The trailer-mounted machine shall be designed and constructed to repair larger cracks, potholes, and broad areas. The machine shall be capable of blowing water, dust or debris from the pothole or surface to be repaired. The machine must be capable of patching while moving forward or reverse, must be capable of patching at temperatures as low as 5 degrees F. The machine must be capable of performing each of the following functions:

| | Yes | No |
|---|---|---|
| Clean cracks and surfaces | Yes | |
| Spray liquid asphalt emulsion over area to provide a tack coat | Yes | |
| Apply emulsion-coated aggregate to provide high-density patch | Yes | |
| Cover repaired area with dry aggregate | Yes | |
| Overnight electric heating for maintaining emulsion temperature | Yes | |

**Dimensions:**

| | Yes | No |
|---|---|---|
| Width and height to meet State and Federal requirements without requiring oversize permits. | Yes | |
| Air is used to feed and propel aggregate and emulsion to the nozzle at up to 135 lbs. per minute. No moving parts are involved in the spray injection process. | Yes | |
| Aggregate feed system can pass up to 2-1/2 inch rock and is regulated by engine rpm providing infinite adjustment for job-site conditions. | Yes | |
| Boom system is ergonomically designed for easy, natural movement without fatigue. | Yes | |
| Self-cleaning Vent-Flo nozzle can patch close to traffic without overspray. | Yes | |

**Specifications:**

| | Yes | No |
|---|---|---|
| 135 lbs./min, 1/4-1/2-inch wet or dry aggregate | Yes | |

**Blower:**

| | Yes | No |
|---|---|---|
| Integrated 6 yd. rectangular in shape with 9ft x 7ft. opening | Yes | |
| Direct driven from engine flywheel | Yes | |
| 10 psi relief valve | Yes | |

**Compressor:**

| | Yes | No |
|---|---|---|
| 15 cfm direct driven | Yes | |
| Governed from 70-95 psi | Yes | |

**Tanks:**

| | Yes | No |
|---|---|---|
| Emulsion - 250 gallons, 200 psi working pressure R-15 insulation | Yes | |
| Two 1500-watt heat blankets with thermostats | Yes | |
| Clean-Out - 15-gallon, 200 psi working pressure | Yes | |
| Engine Fuel - 18 gallons | Yes | |

**Swing Hose Carrier:**

| | Yes | No |
|---|---|---|
| Trifold No Fatigue Design. | Yes | |

**Operator Controls:**

| | Yes | No |
|---|---|---|
| Emulsion and rock flow, engine rpm, horn. | Yes | |

**Frame:**

| | Yes | No |
|---|---|---|
| Emulsion and rock flow, engine rpm, horn. | Yes | |

**Miscellaneous:**

| | Yes | No |
|---|---|---|
| Dual axle, leaf spring (12,000 lb.). | Yes | |
| (4) 225/75R15 Load "D" tires. | Yes | |
| Electric brakes. | Yes | |
| Tail, brake, directional, strobe and arrow-board lights. | Yes | |
| 96" wide x 194" long x 91" high. | Yes | |
| Weight – 5,380 lbs dry. | Yes | |

**Safety Decals:**

| | Yes | No |
|---|---|---|
| Unit shall be equipped with required safety decals and signage | Yes | |

**Aggregate Delivery Hose:**

| | Yes | No |
|---|---|---|
| 2" inside diameter, rubber-lined, abrasion resistant, non-kinking hose outfitted with spiral wire reinforcement. To minimize wear points, at no point will there be bends in the delivery hose with a radius of less than 18". | Yes | |

**Options:**

**Bid must include the cost for each of the following options, itemized separately on the bid**

| | Yes | No |
|---|---|---|
| Crack Sealing Wand and associated hardware installed and ready to use. | Yes | |

**This project is being supported, in whole or in part, by the U.S. Department of the Treasury, in utilizing the U.S. Department of the Treasury Coronavirus State and Local Fiscal Recovery Funds (ARPA) program and is subject to all applicable Federal and State laws and regulations.**

# EXHIBIT B – ARPA REQUIRED PROVISIONS

CFR 200.327 Contract provisions. The Non-Federal entity's contracts should contain applicable provisions described in Appendix II to Part 200—Contract Provisions for Non-Federal Entity Contracts Under Federal Awards. The Non-Federal entity's contracts must contain the provisions described in Appendix II to Part 200—Contract Provisions for Non-Federal Entity Contracts Under Federal Awards, as applicable.

| THRESHOLD | PROVISION | CITATION | PROVISION APPLIES TO |
|---|---|---|---|
| | **2 CFR 200 Appendix II (A-L)** | | |
| >$250,000 (Simplified Acquisition Threshold) | Contracts for more than the simplified acquisition threshold, which is the inflation adjusted amount determined by the Civilian Agency Acquisition Council and the Defense Acquisition Regulations Council (Councils) as authorized by 41 U.S.C. 1908, must address administrative, contractual, or legal remedies in instances where contractors violate or breach contract terms, and provide for such sanctions and penalties as appropriate. | 2 CFR 200 APPENDIX II (A) | Contractor RFP/IFB<br>Contractor RFQ<br>Subrecipients |
| >$10,000 | All contracts in excess of $10,000 must address termination for cause and for convenience by the Non-Federal entity including the manner by which it will be affected and the basis for settlement. | 2 CFR 200 APPENDIX II (B) | Contractor RFP/IFB<br>Contractor RFQ<br>Subrecipients |
| None | Equal Employment Opportunity. Except as otherwise provided under 41 CFR Part 60, all contracts that meet the definition of "federally assisted construction contract" in 41 CFR Part 60-1.3 must include the equal opportunity clause provided under 41 CFR 60-1.4(b), in accordance with Executive Order 11246, "Equal Employment Opportunity" (30 FR 12319, 12935, 3 CFR Part, 1964-1965 Comp., p. 339), as amended by Executive Order 11375, "Amending Executive Order 11246 Relating to Equal Employment Opportunity," and implementing regulations at 41 CFR part 60, "Office of Federal Contract Compliance Programs, Equal Employment Opportunity, Department of Labor."<br>41 CFR 60-1.4 Equal opportunity clause.<br>(b) Federally assisted construction contracts. (1) Except as otherwise provided, each administering agency shall require the inclusion of the following language as a condition of any grant, contract, loan, insurance, or guarantee involving federally assisted construction which is not exempt from the requirements of the equal opportunity clause:<br>The [recipient] hereby agrees that it will incorporate or cause to be incorporated into any contract for construction work, or modification thereof, as defined in the regulations of the Secretary of Labor at 41 CFR Chapter 60, which is paid for in whole or in part with funds obtained from the Federal Government or borrowed on the credit of the Federal Government pursuant to a grant, contract, loan, insurance, or guarantee, or undertaken pursuant to any Federal program involving such grant, contract, loan, insurance, or guarantee, the following equal opportunity clause:<br>During the performance of this contract, the contractor agrees as follows:<br>(1) The contractor will not discriminate against any employee or applicant for employment because of race, color, religion, sex, sexual orientation, gender identity, or national origin. The contractor will take affirmative action to ensure that applicants are employed, and that employees are treated during employment without regard to their race, color, religion, sex, sexual orientation, gender identity, or national origin. Such action shall include, but not be limited to the following:<br>Employment, upgrading, demotion, or transfer; recruitment or recruitment advertising; layoff or termination; rates of pay or other forms of compensation; and selection for training, including apprenticeship. The contractor agrees to post in | 2 CFR 200 APPENDIX II (C) and 41 CFR §60-1.4(b) | Contractor RFP/IFB<br>Contractor RFQ<br>Subrecipients |

| THRESHOLD | PROVISION | CITATION | PROVISION APPLIES TO |
|---|---|---|---|
| | conspicuous places, available to employees and applicants for employment, notices to be provided setting forth the provisions of this nondiscrimination clause.<br>(2) The contractor will, in all solicitations or advertisements for employees placed by or on behalf of the contractor, state that all qualified applicants will receive consideration for employment without regard to race, color, religion, sex, sexual orientation, gender identity, or national origin.<br>(3) The contractor will not discharge or in any other manner discriminate against any employee or applicant for employment because such employee or applicant has inquired about, discussed, or disclosed the compensation of the employee or applicant or another employee or applicant. This provision shall not apply to instances in which an employee who has access to the compensation information of other employees or applicants as a part of such employee's essential job functions discloses the compensation of such other employees or applicants to individuals who do not otherwise have access to such information, unless such disclosure is in response to a formal complaint or charge, in furtherance of an investigation, proceeding, hearing, or action, including an investigation conducted by the employer, or is consistent with the contractor's legal duty to furnish information.<br>(4) The contractor will send to each labor union or representative of workers with which he has a collective bargaining agreement or other contract or understanding, a notice to be provided advising the said labor union or workers' representatives of the contractor's commitments under this section and shall post copies of the notice in conspicuous places available to employees and applicants for employment.<br>(5) The contractor will comply with all provisions of Executive Order 11246 of September 24, 1965, and of the rules, regulations, and relevant orders of the Secretary of Labor.<br>(6) The contractor will furnish all information and reports required by Executive Order 11246 of September 24, 1965, and by rules, regulations, and orders of the Secretary of Labor, or pursuant thereto, and will permit access to his books, records, and accounts by the administering agency and the Secretary of Labor for purposes of investigation to ascertain compliance with such rules, regulations, and orders.<br>(7) In the event of the contractor's noncompliance with the nondiscrimination clauses of this contract or with any of the said rules, regulations, or orders, this contract may be canceled, terminated, or suspended in whole or in part and the contractor may be declared ineligible for further Government contracts or federally assisted construction contracts in accordance with procedures authorized in Executive Order 11246 of September 24, 1965, and such other sanctions may be imposed and remedies invoked as provided in Executive Order 11246 of September 24, 1965, or by rule, regulation, or order of the Secretary of Labor, or as otherwise provided by law.<br>(8) The contractor will include the portion of the sentence immediately preceding paragraph (1) and the provisions of paragraphs (1) through (8) in every subcontract or purchase order unless exempted by rules, regulations, or orders of the Secretary of Labor issued pursuant to section 204 of Executive Order 11246 of September 24, 1965, so that such provisions will be binding upon each subcontractor or vendor. The contractor will take such action with respect to any subcontract or purchase order as the administering agency may direct as a means of enforcing such provisions, including sanctions for noncompliance:<br>Provided, however, that in the event a contractor becomes involved in, or is threatened with, litigation with a subcontractor or vendor as a result of such direction by the administering agency, the contractor may request the United States to enter into such litigation to protect the interests of the United States.<br>The [recipient] further agrees that it will be bound by the above equal opportunity clause with respect to its own employment practices when it participates in federally assisted construction work: Provided, that if the [recipient] so participating is a State or local government, the above equal opportunity clause is not applicable to any agency, instrumentality or subdivision of such government which does not participate in work on or under the contract. | | |

| THRESHOLD | PROVISION | CITATION | PROVISION APPLIES TO |
|---|---|---|---|
| | The [recipient] agrees that it will assist and cooperate actively with the administering agency and the Secretary of Labor in obtaining the compliance of contractors and subcontractors with the equal opportunity clause and the rules, regulations, and relevant orders of the Secretary of Labor, that it will furnish the administering agency and the Secretary of Labor such information as they may require for the supervision of such compliance, and that it will otherwise assist the recipient agency in the discharge of the agency's primary responsibility for securing compliance.<br><br>The recipient further agrees that it will refrain from entering into any contract or contract modification subject to Executive Order 11246 of September 24, 1965, with a contractor debarred from, or who has not demonstrated eligibility for, Government contracts and federally assisted construction contracts pursuant to the Executive Order and will carry out such sanctions and penalties for violation of the equal opportunity clause as may be imposed upon contractors and subcontractors by the administering agency or the Secretary of Labor pursuant to Part II, Subpart D of the Executive Order. In addition, the [recipient] agrees that if it fails or refuses to comply with these undertakings, the administering agency may take any or all of the following actions: cancel, terminate, or suspend in whole or in part this grant (contract, loan, insurance, guarantee); refrain from extending any further assistance to the [recipient] under the program with respect to which the failure or refund occurred until satisfactory assurance of future compliance has been received from such [recipient]; and refer the case to the Department of Justice for appropriate legal proceedings. | | |
| >$10,000,000 for ARPA but State Provision Applies at any amount and/or<br><br>>$2,000 for CDBG/Braided Funds Projects<br><br>See TX Prevailing Wage Laws | Davis-Bacon Act, as amended (40 U.S.C. 3141-3148). When required by Federal program legislation, all prime construction contracts in excess of $10,000,00 awarded by Non-Federal entities must include a provision for compliance with the Davis-Bacon Act (40 U.S.C. 3141-3144, and 3146-3148) as supplemented by Department of Labor regulations (29 CFR Part 5, "Labor Standards Provisions Applicable to Contracts Covering Federally Financed and Assisted Construction"). In accordance with the statute, contractors must be required to pay wages to laborers and mechanics at a rate not less than the prevailing wages specified in a wage determination made by the Secretary of Labor. In addition, contractors must be required to pay wages not less than once a week. The Non-Federal entity must place a copy of the current prevailing wage determination issued by the Department of Labor in each solicitation. The decision to award a contract or subcontract must be conditioned upon the acceptance of the wage determination. The Non-Federal entity must report all suspected or reported violations to the Federal awarding agency.<br><br>The contracts must also include a provision for compliance with the Copeland "Anti-Kickback" Act (40 U.S.C. 3145), as supplemented by Department of Labor regulations (29 CFR Part 3, "Contractors and Subcontractors on Public Building or Public Work Financed in Whole or in Part by Loans or Grants from the United States"). The Act provides that each contractor or subrecipient must be prohibited from inducing, by any means, any person employed in the construction, completion, or repair of public work, to give up any part of the compensation to which he or she is otherwise entitled. The Non-Federal entity must report all suspected or reported violations to the Federal awarding agency. | 2 CFR 200 APPENDIX II (D) | Contractor RFP/IFB<br><br>Subrecipients |
| >$100,000 | Contract Work Hours and Safety Standards Act (40 U.S.C. 3701-3708). Where applicable, all contracts awarded by the Non-Federal entity in excess of $100,000 that involve the employment of mechanics or laborers must include a provision for compliance with 40 U.S.C. 3702 and 3704, as supplemented by Department of Labor regulations (29 CFR Part 5). Under 40 U.S.C. 3702 of the Act, each contractor must be required to compute the wages of every mechanic and laborer on the basis of a standard work week of 40 hours. Work in excess of the standard work week is permissible provided that the worker is compensated at a rate of not less than one and a half times the basic rate of pay for all hours worked in excess of 40 hours in the work week. The requirements of 40 U.S.C. 3704 are applicable to construction work and provide that no laborer or mechanic must be required to work in surroundings | 2 CFR 200 APPENDIX II (E) | Contractor RFP/IFB<br><br>Subrecipients |

| THRESHOLD | PROVISION | CITATION | PROVISION APPLIES TO |
|---|---|---|---|
| | or under working conditions which are unsanitary, hazardous, or dangerous. These requirements do not apply to the purchases of supplies or materials or articles ordinarily available on the open market, or contracts for transportation or transmission of intelligence. | | |
| None | Rights to Inventions Made Under a Contract or Agreement. If the Federal award meets the definition of "funding agreement" under 37 CFR § 401.2 (a) and the recipient or subrecipient wishes to enter into a contract with a small business firm or nonprofit organization regarding the substitution of parties, assignment or performance of experimental, developmental, or research work under that "funding agreement," the recipient or subrecipient must comply with the requirements of 37 CFR Part 401, "Rights to Inventions Made by Nonprofit Organizations and Small Business Firms Under Government Grants, Contracts and Cooperative Agreements," and any implementing regulations issued by the awarding agency. | 2 CFR 200 APPENDIX II (F) | Contractor RFP/IFB<br>Contractor RFQ<br>Subrecipients |
| >$150,000 | Clean Air Act (42 U.S.C. 7401-7671q.) and the Federal Water Pollution Control Act (33 U.S.C. 1251-1387), as amended – Contracts and subgrants of amounts in excess of $150,000 must contain a provision that requires the Non-Federal award to agree to comply with all applicable standards, orders or regulations issued pursuant to the Clean Air Act (42 U.S.C. 7401-7671q) and the Federal Water Pollution Control Act as amended (33 U.S.C. 1251-1387). Violations must be reported to the Federal awarding agency and the Regional Office of the Environmental Protection Agency (EPA). | 2 CFR 200 APPENDIX II (G) | Contractor RFP/IFB<br>Contractor RFQ<br>Subrecipients |
| >$25,000 | Debarment and Suspension (Executive Orders 12549 and 12689) – A contract award (see 2 CFR 180.220) must not be made to parties listed on the governmentwide exclusions in the System for Award Management (SAM), in accordance with the OMB guidelines at 2 CFR 180 that implement Executive Orders 12549 (3 CFR part 1986 Comp., p. 189) and 12689 (3 CFR part 1989 Comp., p. 235), "Debarment and Suspension." SAM Exclusions contains the names of parties debarred, suspended, or otherwise excluded by agencies, as well as parties declared ineligible under statutory or regulatory authority other than Executive Order 12549. | 2 CFR 200 APPENDIX II (H) | Contractor RFP/IFB<br>Contractor RFQ<br>Subrecipients<br>Vendors |
| >$100,000 | Byrd Anti-Lobbying Amendment (31 U.S.C. 1352) – Contractors that apply or bid for an award exceeding $100,000 must file the required certification. Each tier certifies to the tier above that it will not and has not used Federal appropriated funds to pay any person or organization for influencing or attempting to influence an officer or employee of any agency, a member of Congress, officer or employee of Congress, or an employee of a member of Congress in connection with obtaining any Federal contract, grant or any other award covered by 31 U.S.C. 1352. Each tier must also disclose any lobbying with Non-Federal funds that takes place in connection with obtaining any Federal award. Such disclosures are forwarded from tier to tier up to the Non-Federal award. | 2 CFR 200 APPENDIX II (I) and 24 CFR §570.303 | Contractor RFP/IFB<br>Contractor RFQ<br>Subrecipients |

| THRESHOLD | PROVISION | CITATION | PROVISION APPLIES TO |
|---|---|---|---|
| | See 2 CFR §200.323 - Procurement of Recovered Materials.<br><br>Where applicable, in the performance of contract, pursuant to 2 CFR 200.323, the contractor must comply with section 6002 of the Solid Waste Disposal Act, as amended by the Resource Conservation and Recovery Act. The requirements of Section 6002 include procuring only items designated in guidelines of the Environmental Protection Agency (EPA) at 40 CFR part 247 that contain the highest percentage of recovered materials practicable, consistent with maintaining a satisfactory level of competition, where the purchase price of the item exceeds $10,000 or the value of the quantity acquired during the preceding fiscal year exceeded $10,000; procuring solid waste management services in a manner that maximizes energy and resource recovery; and establishing an affirmative procurement program for procurement of recovered materials identified in the EPA guidelines.<br><br>To the extent that the scope of work or specifications in the contract requires the contractor to provide recovered materials the scope of work or specifications are modified to require that as follows.<br><br>i. In the performance of this contract, the Contractor shall make maximum use of products containing recovered materials that are EPA-designated items unless the product cannot be acquired—<br>1. Competitively within a timeframe providing for compliance with the contract performance schedule;<br>2. Meeting contract performance requirements; or<br>3. At a reasonable price.<br>ii. Information about this requirement, along with the list of EPA-designated items, is available at EPA's Comprehensive Procurement Guidelines web site, https://www.epa.gov/smm/comprehensive-procurement-guideline-cpg-program.<br>iii. The Contractor also agrees to comply with all other applicable requirements of Section 6002 of the "Solid Waste Disposal Act." | 2 CFR 200<br>APPENDIX II (J) | Contractor RFP/IFB<br>Contractor RFQ<br>Subrecipients |
| | See 2 CFR §200.216 - Prohibition on certain telecommunications and video surveillance services or equipment<br><br>(a) Recipients and subrecipients are prohibited from obligating or expending loan or grant funds to:<br>(1) Procure or obtain;<br>(2) Extend or renew a contract to procure or obtain; or<br>(3) Enter into a contract (or extend or renew a contract) to procure or obtain equipment, services, or systems that uses covered telecommunications equipment or services as a substantial or essential component of any system, or as critical technology as part of any system. As described in Public Law 115-232, section 889, covered telecommunications equipment is telecommunications equipment produced by Huawei Technologies Company or ZTE Corporation (or any subsidiary or affiliate of such entities).<br>(i) For the purpose of public safety, security of government facilities, physical security surveillance of critical infrastructure, and other national security purposes, video surveillance and telecommunications equipment produced by Hytera Communications Corporation, Hangzhou Hikvision Digital Technology Company, or Dahua Technology Company (or any subsidiary or affiliate of such entities).<br>(ii) Telecommunications or video surveillance services provided by such entities or using such equipment.<br>(iii) Telecommunications or video surveillance equipment or services produced or provided by an entity that the Secretary of Defense, in consultation with the Director of the National Intelligence or the Director of the Federal Bureau of Investigation, reasonably believes to be an entity | 2 CFR 200<br>APPENDIX II (K) | Contractor RFP/IFB<br>Contractor RFQ<br>Subrecipients |

| THRESHOLD | PROVISION | CITATION | PROVISION APPLIE TO |
|---|---|---|---|
| | owned or controlled by, or otherwise connected to, the government of a covered foreign country.<br>(b) In implementing the prohibition under Public Law 115-232, section 889, subsection (f), paragraph (1), heads of executive agencies administering loan, grant, or subsidy programs shall prioritize available funding and technical support to assist affected businesses, institutions and organizations as is reasonably necessary for those affected entities to transition from covered communications equipment and services, to procure replacement equipment and services, and to ensure that communications service to users and customers is sustained.<br>(c) See Public Law 115-232, section 889 for additional information.<br>(d) See also § 200.471. | | |
| | See 2 CFR §200.322 - Domestic Preferences for Procurements.<br><br>(a) As appropriate and to the extent consistent with law, the Non-Federal entity should, to the greatest extent practicable under a Federal award, provide a preference for the purchase, acquisition, or use of goods, products, or materials produced in the United States (including but not limited to iron, aluminum, steel, cement, and other manufactured products). The requirements of this section must be included in all subawards including all contracts and purchase orders for work or products under this award.<br><br>(b) For purposes of this section:<br>(1) "Produced in the United States" means, for iron and steel products, that all manufacturing processes, from the initial melting stage through the application of coatings, occurred in the United States.<br>(2) "Manufactured products" means items and construction materials composed in whole or in part of non-ferrous metals such as aluminum; plastics and polymer-based products such as polyvinyl chloride pipe; aggregates such as concrete; glass, including optical fiber; and lumber. | 2 CFR 200 APPENDIX II (L) | Contractor RFP/IFB<br>Contractor RFQ<br>Subrecipients |
| | **Additional 2 CFR 200 references & Other Regulations** | | |
| None | The Federal awarding agency must establish conflict of interest policies for Federal awards. The Non-Federal entity must disclose in writing any potential conflict of interest to the Federal awarding agency or pass-through entity in accordance with applicable Federal awarding agency policy. | 2 CFR 200.112 | Contractor RFP/IFB<br>Contractor RFQ<br>Subrecipients |
| None | Contracting with HUB, small and minority businesses, women's business enterprises, and labor surplus area firms.<br>(a) The Non-Federal entity must take all necessary affirmative steps to assure that minority businesses, women's business enterprises, and labor surplus area firms are used when possible.<br>(b) Affirmative steps must include:<br>(1) Placing qualified small and minority businesses and women's business enterprises on solicitation lists;<br>(2) Assuring that small and minority businesses, and women's business enterprises are solicited whenever they are potential sources;<br>(3) Dividing total requirements, when economically feasible, into smaller tasks or quantities to permit maximum participation by small and minority businesses, and women's business enterprises;<br>(4) Establishing delivery schedules, where the requirement permits, which encourage participation by small and minority businesses, and women's | 2 CFR 200.321 | Contractor RFP/IFB<br>Contractor RFQ<br>Subrecipients |

| THRESHOLD | PROVISION | CITATION | PROVISION APPLIES TO |
|---|---|---|---|
| | business enterprises;<br>(5) Using the services and assistance, as appropriate, of such organizations as the Small Business Administration and the Minority Business Development Agency of the Department of Commerce; and<br>(6) Requiring the prime contractor, if subcontracts are to be let, to take the affirmative steps listed in paragraphs (b)(1) through (5) of this section. | | |
| >$10,000 | An NFE (Non-Federal Entity) that is a state agency or an agency of a political subdivision of a state, and the NFE's contractors must comply with Section 6002 of the Solid Waste Disposal Act.<br>Applicable NFEs must include a contract provision requiring compliance with this requirement.<br>This includes contracts awarded by a state agency or political subdivision of a state and its contractors for certain items, as designated by the EPA, with a purchase price greater than $10,000.<br>Indian Tribal Governments and nonprofit organizations are not required to comply with this provision. Additional requirements are listed below. | 2 CFR 200.323 | Contractor RFP/IFB<br>Contractor RFQ<br>Subrecipients |
| None | Financial records, supporting documents, statistical records, and all other Non-Federal entity records pertinent to a Federal award must be retained for a period of three years from the date of submission of the final expenditure report or, for Federal awards that are renewed quarterly or annually, from the date of the submission of the quarterly or annual financial report, respectively, as reported to the Federal awarding agency or pass-through entity in the case of a subrecipient. Federal awarding agencies and pass-through entities must not impose any other record retention requirements upon Non-Federal entities. **All records related to ARPA shall be maintained for 5 years per the ARPA terms, conditions, and regulations.** The only exceptions are the following:<br>(a) If any litigation, claim, or audit is started before the expiration of the 3-year period, the records must be retained until all litigation, claims, or audit findings involving the records have been resolved and final action taken. **All records related to ARPA shall be maintained for 5 years per the ARPA terms, conditions, and regulations.**<br>(b) When the Non-Federal entity is notified in writing by the Federal awarding agency, cognizant agency for audit, oversight agency for audit, cognizant agency for indirect costs, or pass-through entity to extend the retention period.<br>(c) Records for real property and equipment acquired with Federal funds must be retained for 3 years after final disposition. All records related to ARPA shall be maintained for 5 years per the ARPA terms and conditions and regulations.<br>(d) When records are transferred to or maintained by the Federal awarding agency or pass-through entity, the 3-year retention requirement is not applicable to the Non-Federal entity All records related to ARPA shall be maintained for 5 years per the ARPA terms and conditions and regulations. **All records related to ARPA shall be maintained for 5 years per the ARPA terms, conditions, and regulations.**<br>(e) Records for program income transactions after the period of performance. In some cases, recipients must report program income after the period of performance. Where there is such a requirement, the retention period for the records pertaining to the earning of the program income starts from the end of the Non-Federal entity's fiscal year in which the program income is earned.<br>(f) Indirect cost rate proposals and cost allocations plans. This paragraph applies to the following types of documents and their supporting records: Indirect cost rate computations or proposals, cost allocation plans, and any similar accounting computations of the rate at which a particular group of costs is chargeable (such as computer usage chargeback rates or composite fringe benefit rates).<br>(1) *If submitted for negotiation.* If the proposal, plan, or other computation is | 2 CFR 200.334 | Contractor RFP/IFB<br>Contractor RFQ<br>Subrecipients<br>Vendors |

| THRESHOLD | PROVISION | CITATION | PROVISION APPLIES TO |
|---|---|---|---|
| | required to be submitted to the Federal Government (or to the pass-through entity) to form the basis for negotiation of the rate, then the 3-year retention period for its supporting records starts from the date of such submission. **All records related to ARPA shall be maintained for 5 years per the ARPA terms, conditions, and regulations.**<br>(2) *If not submitted for negotiation.* If the proposal, plan, or other computation is not required to be submitted to the Federal Government (or to the pass-through entity) for negotiation purposes, then the 3-year retention period for the proposal, plan, or computation and its supporting records starts from the end of the fiscal year (or other accounting period) covered by the proposal, plan, or other computation. **All records related to ARPA shall be maintained for 5 years per the ARPA terms, conditions, and regulations.** | | |
| None | The Federal awarding agency and the Non-Federal entity should, whenever practicable, collect, transmit, and store Federal award-related information in open and machine-readable formats rather than in closed formats or on paper in accordance with applicable legislative requirements. A machine-readable format is a format in a standard computer language (not English text) that can be read automatically by a web browser or computer system. The Federal awarding agency or pass-through entity must always provide or accept paper versions of Federal award-related information to and from the Non-Federal entity upon request. If paper copies are submitted, the Federal awarding agency or pass-through entity must not require more than an original and two copies. When original records are electronic and cannot be altered, there is no need to create and retain paper copies. When original records are paper, electronic versions may be substituted through the use of duplication or other forms of electronic media provided that they are subject to periodic quality control reviews, provide reasonable safeguards against alteration, and remain readable. | 2 CFR 200.336 | Contractor RFP/IFB<br>Contractor RFQ<br>Subrecipients |
| None | CONTRACTS WITH COMPANIES ENGAGED IN BUSINESS WITH IRAN, SUDAN, OR FOREIGN TERRORIST ORGANIZATION PROHIBITED. A governmental entity may not enter into a governmental contract with a company that is identified on a list prepared and maintained under Section 806.051, 807.051, or 2252.153. The term "foreign terrorist organization" in this paragraph has the meaning assigned to such a term in Section 2252.151(2) of the Texas Government Code. | Texas Government Code 2252.152 | Contractor RFP/IFB<br>Contractor RFQ<br>Subrecipients |
| >$100,000 | PROVISION REQUIRED IN CONTRACT.<br>(a) This section applies only to a contract that:<br>(1) is between a governmental entity and a company with 10 or more full-time employees; and<br>(2) has a value of $100,000 or more that is to be paid wholly or partly from public funds of the governmental entity.<br>(b) A governmental entity may not enter into a contract with a company for goods or services unless the contract contains a written verification from the company that it:<br>(1) does not boycott Israel; and<br>(2) will not boycott Israel during the term of the contract. | Texas Government Code 2271 | Contractor RFP/IFB<br>Contractor RFQ<br>Subrecipients<br>Vendors |
| For Critical Infrastructure Projects | PROHIBITION ON CONTRACTS WITH CERTAIN FOREIGN-OWNED COMPANIES IN CONNECTION WITH CRITICAL INFRASTRUCTURE.<br>PROHIBITED CONTRACTS.<br>(a) A governmental entity may not enter into a contract or other agreement relating to critical infrastructure in this state with a company:<br>(1) if, under the contract or other agreement, the company would be granted direct or remote access to or control of critical infrastructure in this state, excluding access specifically allowed by the governmental entity for product | Texas Government Code, Title 10, Subtitle F, Chapter 2274.0102 | Subrecipients<br>EC 6.1 Awardees |

| THRESHOLD | PROVISION | CITATION | PROVISION APPLIES TO |
|---|---|---|---|
| | warranty and support purposes; and<br>(2) if the governmental entity knows that the company is:<br>(A) owned by or the majority of stock or other ownership interest of the company is held or controlled by:<br>(i) individuals who are citizens of China, Iran, North Korea, Russia, or a designated country; or<br>(ii) a company or other entity, including a governmental entity, that is owned or controlled by citizens of or is directly controlled by the government of China, Iran, North Korea, Russia, or a designated country; or<br>(B) headquartered in China, Iran, North Korea, Russia, or a designated country.<br>(b) The prohibition described by Subsection (a) applies regardless of whether:<br>(1) the company's or its parent company's securities are publicly traded; or<br>(2) the company or its parent company is listed on a public stock exchange as:<br>(A) a Chinese, Iranian, North Korean, or Russian company; or<br>(B) a company of a designated country. | | |
| None | Mandatory standards and policies relating to energy efficiency which are contained in the state energy conservation plan issued in compliance with the Energy Policy and Conservation Act. | 42 U.S.C. 6201 | Contractor RFP/IFB<br>Subrecipients |
| None | The Firm agrees that no otherwise qualified individual with disabilities shall, solely by reason of his/her disability, be denied the benefits of, or be subjected to discrimination, including discrimination in employment, under any program or activity receiving federal financial assistance. | Section 504 of the Rehabilitation Act of 1973, as amended. | Subrecipients |
| | **ARPA Terms & Conditions** | | |
| ARPA Terms, Conditions, & Records | 1. Use of Funds.<br>a. Recipient understands and agrees that the funds disbursed under this award may only be used in compliance with section 603(c) of the Social Security Act (the Act), Treasury's regulations implementing that section, and guidance issued by Treasury regarding the foregoing.<br>b. Recipient will determine prior to engaging in any project using this assistance that it has the institutional, managerial, and financial capability to ensure proper planning, management, and completion of such project. | Section 9901 of the American Rescue Plan Act, Pub. L. No. 117-2;<br>Section 602(b), 603(b) and/or 603(c) as applicable | Subrecipients |
| ARPA Terms, Conditions, & Records | 2. Period of Performance. The period of performance for this award begins on the date hereof and ends on December 31, 2026. As set forth in Treasury's implementing regulations, Recipients may use award funds to cover eligible costs incurred during the period that begins on March 3, 2021, and ends on December 31, 2024. | Section 9901 of the American Rescue Plan Act, Pub. L. No. 117-2;<br>Section 602(b), 603(b) and/or 603(c) as applicable | Subrecipients |
| ARPA Terms, Conditions, & Records | 3. Reporting. Recipient agrees to comply with any reporting obligations established by Treasury as they relate to this award. | Section 9901 of the American Rescue Plan Act, Pub. L. No. 117-2;<br>Section 602(b), 603(b) and/or 603(c) as applicable | Subrecipients |

| THRESHOLD | PROVISION | CITATION | PROVISION APPLIES TO |
|---|---|---|---|
| ARPA Terms, Conditions, & Records | 4. Maintenance of and Access to Records<br>a. Recipient shall maintain records and financial documents sufficient to evidence compliance with section 603(c) of the Act, Treasury's regulations implementing that section, and guidance issued by Treasury regarding the foregoing.<br>b. The Treasury Office of Inspector General and the Government Accountability Office, or their authorized representatives, shall have the right of access to records (electronic and otherwise) of Recipient in order to conduct audits or other investigations.<br>c. Records shall be maintained by Recipient for a period of five (5) years after all funds have been expended or returned to Treasury, whichever is later. | Section 9901 of the American Rescue Plan Act, Pub. L. No. 117-2;<br>Section 602(b), 603(b) and/or 603(c) as applicable | Contractor RFP/IFB<br>Contractor RFQ<br>Subrecipients<br>Vendors |
| ARPA Terms, Conditions, & Records | 5. Pre-award Costs. Pre-award costs, as defined in 2 CFR § 200.458, may not be paid with funding from this award. | Section 9901 of the American Rescue Plan Act, Pub. L. No. 117-2;<br>Section 602(b), 603(b) and/or 603(c) as applicable | Subrecipients |
| ARPA Terms, Conditions, & Records | 6. Administrative Costs. Recipient may use funds provided under this award to cover both direct and indirect costs. | Section 9901 of the American Rescue Plan Act, Pub. L. No. 117-2;<br>Section 602(b), 603(b) and/or 603(c) as applicable | Subrecipients |
| ARPA Terms, Conditions, & Records | 7. Cost Sharing. Cost sharing or matching funds are not required to be provided by Recipient. | Section 9901 of the American Rescue Plan Act, Pub. L. No. 117-2;<br>Section 602(b), 603(b) and/or 603(c) as applicable | Subrecipients |
| ARPA Terms, Conditions, & Records | 8. Conflicts of Interest. Recipient understands and agrees it must maintain a conflict of interest policy consistent with 2 CFR § 200.318(c) and that such conflict of interest policy is applicable to each activity funded under this award. Recipient and subrecipients must disclose in writing to Treasury or the pass-through entity, as appropriate, any potential conflict of interest affecting the awarded funds in accordance with 2 CFR § 200.112. | Section 9901 of the American Rescue Plan Act, Pub. L. No. 117-2;<br>Section 602(b), 603(b) and/or 603(c) as applicable | Contractor RFP/IFB<br>Contractor RFQ<br>Subrecipients<br>Vendors |
| ARPA Terms, Conditions, & Records | 9. Compliance with Applicable Law and Regulations.<br>a. Recipient agrees to comply with the requirements of section 603 of the Act, regulations adopted by Treasury pursuant to section 603(f) of the Act, and guidance issued by Treasury regarding the foregoing. Recipient also agrees to comply with all other applicable federal statutes, regulations, and executive orders, and Recipient shall provide for such compliance by other parties in any agreements it enters into with other parties relating to this award.<br>b. Federal regulations applicable to this award include, without limitation, the following:<br>i. Uniform Administrative Requirements, Cost Principles, and Audit Requirements for Federal Awards, 2 CFR Part 200, other than such provisions as Treasury may determine are inapplicable to this Award and subject to such exceptions as may be otherwise provided by Treasury. Subpart F – Audit Requirements of the Uniform Guidance, implementing the Single Audit Act, shall apply to this award.<br>ii. Universal Identifier and System for Award Management (SAM), 2 CFR Part 25, pursuant to which the award term set forth in Appendix A to 2 CFR Part 25 is | Section 9901 of the American Rescue Plan Act, Pub. L. No. 117-2;<br>Section 602(b), 603(b) and/or 603(c) as applicable | Contractor RFP/IFB<br>Contractor RFQ<br>Subrecipients<br>Vendors |

| THRESHOLD | PROVISION | CITATION | PROVISION APPLIES TO |
|---|---|---|---|
| | hereby incorporated by reference.<br>iii. Reporting Subaward and Executive Compensation Information, 2 CFR Part 170, pursuant to which the award term set forth in Appendix A to 2 CFR Part 170 is hereby incorporated by reference.<br>iv. OMB Guidelines to Agencies on Governmentwide Debarment and Suspension (Non-procurement), 2 CFR Part 180, including the requirement to include a term or condition in all lower tier covered transactions (contracts and subcontracts described in 2 CFR Part 180, subpart B) that the award is subject to 2 CFR Part 180 and Treasury's implementing regulation at 31 CFR Part 19.<br>v. Recipient Integrity and Performance Matters, pursuant to which the award term set forth in 2 CFR Part 200, Appendix XII to Part 200 is hereby incorporated by reference.<br>vi. Governmentwide Requirements for Drug-Free Workplace, 31 CFR Part 20.<br>vii. New Restrictions on Lobbying, 31 CFR Part 21.<br>viii. Uniform Relocation Assistance and Real Property Acquisitions Act of 1970 (42 U.S.C. §§ 4601-4655) and implementing regulations.<br>ix. Generally applicable federal environmental laws and regulations.<br><br>c. Statutes and regulations prohibiting discrimination applicable to this award include, without limitation, the following:<br>i. Title VI of the Civil Rights Act of 1964 (42 U.S.C. §§ 2000d et seq.) and Treasury's implementing regulations at 31 CFR Part 22, which prohibit discrimination on the basis of race, color, or national origin under programs or activities receiving federal financial assistance;<br>ii. The Fair Housing Act, Title VIII of the Civil Rights Act of 1968 (42 U.S.C. §§ 3601 et seq.), which prohibits discrimination in housing on the basis of race, color, religion, national origin, sex, familial status, or disability;<br>iii. Section 504 of the Rehabilitation Act of 1973, as amended (29 U.S.C. § 794), which prohibits discrimination on the basis of disability under any program or activity receiving federal financial assistance;<br>iv. The Age Discrimination Act of 1975, as amended (42 U.S.C. §§ 6101 et seq.), and Treasury's implementing regulations at 31 CFR Part 23, which prohibit discrimination on the basis of age in programs or activities receiving federal financial assistance; and<br>v. Title II of the Americans with Disabilities Act of 1990, as amended (42 U.S.C. §§ 12101 et seq.), which prohibits discrimination on the basis of disability under programs, activities, and services provided or made available by state and local governments or instrumentalities or agencies thereto. | | |
| ARPA Terms, Conditions, & Records | 10. Remedial Actions. In the event of Recipient's noncompliance with section 603 of the Act, other applicable laws, Treasury's implementing regulations, guidance, or any reporting or other program requirements, Treasury may impose additional conditions on the receipt of a subsequent tranche of future award funds, if any, or take other available remedies as set forth in 2 CFR § 200.339. In the case of a violation of section 603(c) of the Act regarding the use of funds, previous payments shall be subject to recoupment as provided in section 603(e) of the Act. | Section 9901 of the American Rescue Plan Act, Pub. L. No. 117-2;<br>Section 602(b), 603(b) and/or 603(c) as applicable | Subrecipients |
| ARPA Terms, Conditions, & Records | 11. Hatch Act. Recipient agrees to comply, as applicable, with requirements of the Hatch Act (5 U.S.C. §§ 1501-1508 and 7324-7328), which limit certain political activities of State or local government employees whose principal employment is in connection with an activity financed in whole or in part by this federal assistance. | Section 9901 of the American Rescue Plan Act, Pub. L. No. 117-2;<br>Section 602(b), 603(b) and/or 603(c) as applicable | Subrecipients |
| ARPA Terms, Conditions, & Records | 12. False Statements. Recipient understands that making false statements or claims in connection with this award is a violation of federal law and may result in criminal, civil, or administrative sanctions, including fines, imprisonment, civil damages and penalties, debarment from participating in federal awards or | Section 9901 of the American Rescue Plan Act, Pub. L. No. 117-2; | Contractor RFP/IFB<br>Contractor RFQ<br>Subrecipients<br>Vendors |

## ATTACHMENT D: CUSTOMER/CLIENT REFERENCES

Respondents shall use Attachment D to describe a minimum of three (3) and maximum of five (5) references for jobs, and corresponding references, completed within last five (5) years.

**Respondent's Name:** Rob Via

The references shall illustrate recent experience successfully completing work of a similar nature and scope as the work described in this RFP. This form may be modified as needed to comply with the requirement to document company information. ***Failure to return this attachment (or a reasonable facsimile) may result in the proposal being considered non-responsive. Failure to provide references may result in the proposal being considered non-responsive.***

**REFERENCE 1:**

| | |
|---|---|
| **Company Name:** | Furnished on receipt of order |
| **Company Address:** | |
| **Contact Name/Title/Phone:** | |
| **Contact Email:** | |
| **Contract Award Date:** | |
| **Contract Completion Date:** | |
| **Contract Project Name:** | |
| **Brief Description of Services:** | |

| THRESHOLD | PROVISION | CITATION | PROVISION APPLIES TO |
|---|---|---|---|
| | contracts, and/or any other remedy available by law. | Section 602(b), 603(b) and/or 603(c) as applicable | |
| ARPA Terms, Conditions, & Records | 13. Publications. Any publications produced with funds from this award must display the following language: "This project [is being] [was] supported, in whole or in part, by federal award number [enter project FAIN] awarded to [name of Recipient] by the U.S. Department of the Treasury." | Section 9901 of the American Rescue Plan Act, Pub. L. No. 117-2; Section 602(b), 603(b) and/or 603(c) as applicable | Subrecipients |
| ARPA Terms, Conditions, & Records | 14. Debts Owed the Federal Government.<br>a. Any funds paid to Recipient (1) in excess of the amount to which Recipient is finally determined to be authorized to retain under the terms of this award; (2) that are determined by the Treasury Office of Inspector General to have been misused; or (3) that are determined by Treasury to be subject to a repayment obligation pursuant to section 603(e) of the Act and have not been repaid by Recipient shall constitute a debt to the federal government.<br>b. Any debts determined to be owed the federal government must be paid promptly by Recipient. A debt is delinquent if it has not been paid by the date specified in Treasury's initial written demand for payment, unless other satisfactory arrangements have been made or if the Recipient knowingly or improperly retains funds that are a debt as defined in paragraph 14(a). Treasury will take any actions available to it to collect such a debt. | Section 9901 of the American Rescue Plan Act, Pub. L. No. 117-2; Section 602(b), 603(b) and/or 603(c) as applicable | Subrecipients |
| ARPA Terms, Conditions, & Records | 15. Disclaimer.<br>a. The United States expressly disclaims any and all responsibility or liability to Recipient or third persons for the actions of Recipient or third persons resulting in death, bodily injury, property damages, or any other losses resulting in any way from the performance of this award or any other losses resulting in any way from the performance of this award or any contract, or subcontract under this award.<br>b. The acceptance of this award by Recipient does not in any way establish an agency relationship between the United States and Recipient. | Section 9901 of the American Rescue Plan Act, Pub. L. No. 117-2; Section 602(b), 603(b) and/or 603(c) as applicable | Subrecipients |
| ARPA Terms, Conditions, & Records | 16. Protections for Whistleblowers.<br>a. In accordance with 41 U.S.C. § 4712, Recipient may not discharge, demote, or otherwise discriminate against an employee in reprisal for disclosing to any of the list of persons or entities provided below, information that the employee reasonably believes is evidence of gross mismanagement of a federal contract or grant, a gross waste of federal funds, an abuse of authority relating to a federal contract or grant, a substantial and specific danger to public health or safety, or a violation of law, rule, or regulation related to a federal contract (including the competition for or negotiation of a contract) or grant.<br>b. The list of persons and entities referenced in the paragraph above includes the following:<br>i. A member of Congress or a representative of a committee of Congress;<br>ii. An Inspector General;<br>iii. The Government Accountability Office;<br>iv. A Treasury employee responsible for contract or grant oversight or management;<br>v. An authorized official of the Department of Justice or other law enforcement agency;<br>vi. A court or grand jury; or<br>vii. A management official or other employee of Recipient, contractor, or subcontractor who has the responsibility to investigate, discover, or address misconduct. | Section 9901 of the American Rescue Plan Act, Pub. L. No. 117-2; Section 602(b), 603(b) and/or 603(c) as applicable | Contractor RFP/IFB<br>Contractor RFQ<br>Subrecipients<br>Vendors |

| THRESHOLD | PROVISION | CITATION | PROVISION APPLIES TO |
|---|---|---|---|
| | c. Recipient shall inform its employees in writing of the rights and remedies provided under this section, in the predominant native language of the workforce. | | |
| ARPA Terms, Conditions, & Records | 17. Increasing Seat Belt Use in the United States. Pursuant to Executive Order 13043, 62 FR 19217 (Apr. 18, 1997), Recipient should encourage its contractors to adopt and enforce on-the-job seat belt policies and programs for their employees when operating company-owned, rented or personally owned vehicles. | Section 9901 of the American Rescue Plan Act, Pub. L. No. 117-2; Section 602(b), 603(b) and/or 603(c) as applicable | Contractor RFP/IFB<br>Contractor RFQ<br>Subrecipients<br>Vendors |
| ARPA Terms, Conditions, & Records | 18. Reducing Text Messaging While Driving. Pursuant to Executive Order 13513, 74 FR 51225 (Oct. 6, 2009), Recipient should encourage its employees, subrecipients, and contractors to adopt and enforce policies that ban text messaging while driving, and Recipient should establish workplace safety policies to decrease accidents caused by distracted drivers | Section 9901 of the American Rescue Plan Act, Pub. L. No. 117-2; Section 602(b), 603(b) and/or 603(c) as applicable | Contractor RFP/IFB<br>Contractor RFQ<br>Subrecipients<br>Vendors |

# EXHIBIT C – OTHER RELEVANT INFORMATION/SPECIAL CONDITIONS

Attach any relevant specifications, e.g., municipal/state code specifications, etc., that will be applicable to this purchase.

N/A

# ATTACHMENTS

**THE FOLLOWING DOCUMENTS MUST BE COMPLETED AND INCLUDED IN THE RESPONSE PACKAGE:**

| | | |
|---|---|---|
| 1. | ATTACHMENT A | SIGNED SOLICITATION RESPONSE COVER SHEET/ACKNOWLEDGEMENT OF ADDENDA/SUBMISSION CHECKLIST |
| 2. | ATTACHMENT B | PRICING SHEET |
| 3. | ATTACHMENT C | SYSTEM FOR AWARD MANAGEMENT (SAM.GOV) RECORD SEARCH |
| 4. | ATTACHMENT D | CUSTOMER/CLIENT REFERENCES |
| 5. | ATTACHMENT E | CERTIFICATE OF INSURANCE (IF APPLICABLE) |
| 6. | ATTACHMENT F | ETHICS AND CONFLICT OF INTEREST ACKNOWLEDGEMENT |
| 7. | ATTACHMENT G | STATEMENT OF CONFLICT OF INTEREST (IF ANY) |
| 8. | ATTACHMENT H | CONFLICT OF INTEREST QUESTIONNAIRE (FORM CIQ) |
| 9. | ATTACHMENT I | DISCLOSURE OF LOBBYING ACTIVITIES SF-LLL CERTIFICATION |
| 10. | ATTACHMENT J | TEXAS ETHICS COMMISSION CERTIFICATE OF INTERESTED PARTIES (FORM 1295) |
| 11. | ATTACHMENT K | BIDDER'S CERTIFICATION |
| 12. | ATTACHMENT L | NON-COLLUSION AFFIDAVIT |

# ATTACHMENT A:

## SOLICITATION RESPONSE COVER SHEET/ACKNOWLEDGMENT OF ADDENDA/SUBMISSION CHECKLIST

| | |
|---|---|
| **Title of Solicitation:** | TRAILER MOUNTED POTHOLE PATCHER |
| **Name of Respondent:** | ROB VIA |
| **Company:** | R. B. EVERETT & COMPANY |
| **Mailing Address:** | P. O. BOX 7300 |
| **City, State, Zip:** | PASADENA, TX 77508 |
| **Phone Number:** | 281-991-8161 |
| **Company Contact Email Address:** | rvia@rbeverett.com |
| **Texas Vendor ID Number:** | |
| **EIN/Federal Tax Identification Number:** | 74-0615140 |

**ACKNOWLEDGEMENT OF ADDENDA**

| ADDENDUM NO. | DATE ISSUED |
|---|---|
| | |
| | |
| | |
| | |

☒ Please check this box if no addenda were issued.

## ATTACHMENT A (CONTINUED)

### SOLICITATION RESPONSE COVER SHEET/ACKNOWLEDGMENT OF ADDENDA/ SUBMISSION CHECKLIST

This checklist is provided for the Respondent's use in assuring compliance with required documentation; however, it does not include all specification requirements and does not relieve the Respondent of the need to read and comply with the specifications. Your submittal of the documents attests to the fact that you have read and/or included the documents with your response.

**SUBMISSION CHECKLIST**

| CHECK FOR COMPLETION | DOCUMENTS REQUIRED FOR SUBMISSION |
|---|---|
| ☒ | A. Solicitation Response Cover Sheet/Acknowledgement of Addenda/Submission Checklist |
| ☒ | B. Pricing Sheet |
| ☒ | C. System for Award Management (SAM.gov) Record Search |
| ☒ | D. Customer/Client References |
| ☒ | E. Certificate of Insurance (if applicable) |
| ☒ | F. Ethics and Conflict of Interest Acknowledgement |
| ☒ | G. Statement of Conflicts of Interest (if any) |
| ☒ | H. Conflict of Interest Questionnaire (Form CIQ) |
| ☒ | Please check this box if the Respondent does not identify a conflict of interest and therefore, will not be submitting the Conflict of Interest Questionnaire Form CIQ. |
| ☐ | I. Disclosure of Lobbying Activities SF-LLL Certification (Required for all proposals exceeding $100,000) |
| ☒ | Please check this box if the proposal does not exceed $100,000. |
| N/A | J. Texas Ethics Commission Certificate of Interested Parties (Form 1295) (This is a sample and is only required to be completed by the Respondent selected for award.) |
| ☒ | K. Bidder's Certification |
| ☒ | L. Non-Collusion Affidavit |
| ☐ | |
| ☐ | |

The Respondent's authorized agent must sign this document to acknowledge having read this solicitation carefully and completely, including the list of addenda, and that the information submitted is true and correct.

| | |
|---|---|
| **AUTHORIZED AGENT NAME:** | ROB VIA |
| **AUTHORIZED SIGNATURE:** | 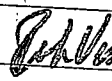 |
| **TITLE OF AUTHORIZED AGENT:** | BUSINESS DEVELOPMENT MANAGER |
| **DATE OF SIGNATURE:** | 10/24/24 |

## ATTACHMENT B: PRICING SHEET

Respondent shall complete and submit the following pricing sheet with the proposal response package. The Entity reserves the right to make an award on the basis of best value in the interest of the Entity. ALL PRICING MUST BE FIRM FIXED PRICING.

| ITEM | DESCRIPTION | QUANTITY | UNIT OF MEASURE | UNIT PRICE | EXTENSION |
|---|---|---|---|---|---|
| 1 | Entity should enter the description and quantity of the services/products as contained in the Scope of Work in Exhibit A | | | $97,256.00 | $97,256.00 |
| 2 | Durapatcher P2 Trailer Patcher | 1 | | $ | $ |
| 3 | with (2) 5/16" Ball Hitch | | | $ | $ |
| 4 | Crack Filling Attachment w/25' Hose | | | $ | $ |
| 5 | and Recoil Reel - OPTION | | | $2,750.00 | $2,750.00 |
| **TOTAL FIRM FIXED PRICE** | | | | | $ |
| 6 | **DELIVERY** – Number of calendar days for delivery after receipt of the order: | | | 90 calendar days | |

| | |
|---|---|
| Name of Firm: | R. B. EVEREIT & COMPANY |
| RFP #: | |
| RFP Name: | ROB VIA,Business Development Manager |

### AUTHORIZED AGENT – SIGNATURE AND CONTACT INFORMATION

The Respondent's authorized agent must sign this document to acknowledge they read this solicitation carefully and completely, and the information submitted is true and correct.

| | |
|---|---|
| **SIGNATURE OF AUTHORIZED AGENT:** | Robert Via |
| **PRINTED NAME OF AUTHORIZED AGENT:** | ROB VIA |
| **TITLE OF AUTHORIZED AGENT:** | BUSINESS DEVELOPMENT MANAGER |
| **DATE OF SIGNATURE:** | 10/24/24 |

# ATTACHMENT C: SYSTEM FOR AWARD MANAGEMENT (SAM.GOV) RECORD SEARCH

This project is funded by Coronavirus State and Local Fiscal Recovery Funds which requires all contractors and vendors to be in good standing according to SAM.gov and the Texas State Comptroller's office.

## Verification of SAM.gov Status

1. Respondent must not be suspended or debarred at the time of the proposal submittal. The proposal response package must include a completed Non-Debarment Certification Form located **on the next page** herein.
2. All Respondents must be pre-vetted for eligibility to perform the outlined ARPA funded scope of work. A printed screenshot from the SAM.gov website verifies whether the Vendor is excluded from contract participation at the federal level.

## Contract Award

The ARPA Award Recipient must verify the SAM.gov status of the Respondent(s) selected for contract award prior to execution of the contract as stated in the Non-Debarment Certification Form. The final verification of the Respondent's SAM.gov status is completed prior to contract award, and in addition to the initial verification documentation provided with the proposal response submittal.

| NON-DEBARMENT CERTIFICATION FORM | | | |
|---|---|---|---|
| **COMPANY/ENTITY LEGAL NAME:** | R. B. EVERETT & COMPANY | | |
| **STREET ADDRESS:** | 8211 RED BLUFF RD | | |
| **CITY:** PASADENA | **STATE:** TEXAS | **ZIP:** 77507 | |
| **CONTACT NAME:** | ROB VIA | | |
| **CONTACT EMAIL:** | rvia@rbeverett.com | **CONTACT PHONE:** | 281-991-8161 |
| ***UEI #** | WYKUKS3MAUK7 | ****TIN #** | |

*Subrecipients are required to have a Unique Entity Identifier (UEI) Number prior to an award. All entities must be pre-vetted for eligibility/ability to perform the outlined ARPA funded scope of work and a record (PDF of SAM.gov screenshot) of SAM debarment clearance must be obtained prior to entering into any final contracts. **Beneficiary Entities are required to have UEI and/or TIN.

**APPLICABLE REGULATIONS: As stated in the ARPA/SLFRF Terms & Conditions:** *"OMB Guidelines to Agencies on Governmentwide Debarment and Suspension (Nonprocurement), 2 CFR Part 180, including the requirement to include a term or condition in all lower tier covered transactions (contracts and subcontracts described in 2 CFR Part 180, subpart B) that the award is subject to 2 CFR Part 180 and Treasury's implementing regulation at 31 CFR Part 19."*

**Also, Federal Executive Order (E.O.) 12549:** "Debarment" requires that contractors, beneficiaries or subrecipient organizations and their principals – who are receiving awards, using federal funds, are not debarred, suspended, proposed for debarment, declared ineligible, or voluntarily excluded by any federal department or agency from doing business with the federal government. By signing this document, you certify that your organization and its principals are not debarred. Failure to comply or attempts to edit this language may disqualify you from receiving or retaining funds. Information on debarment is available at the following website: www.sam.gov

**Be advised that we may pursue available remedies per 2 CFR 180.360 as an ARPA recipient entity:** *"If a federal agency later determines that you failed to tell the [awarding agency] that you were excluded or disqualified at the time you entered into the covered transaction with that person/awarding agency, the agency may pursue any available remedies, including suspension and debarment."*

| [INITIAL] | CERTIFICATION & SIGNATURE |
|---|---|
| | **We hereby certify that we are not excluded, disqualified, or debarred from receiving federally funded awards.** |
| | **We hereby confirm that if that status should change within the course of this agreement, we will provide notification immediately. Failure to do so may result in this agreement's termination and/or the repayment of funds.** |

*Your signature certifies that the information provided on this form is correct and that neither you nor your principal(s) is/are presently debarred, suspended, proposed for debarment, declared ineligible, or voluntarily excluded from participation in this transaction by any federal department or agency.*

Rob Via

**SIGNATURE**

Rob Via, Business Development Manager — 10/24/24

**PRINTED NAME & TITLE** — **DATE**

**FOR DEPARTMENT USE ONLY**

| | | |
|---|---|---|
| SAM Debarment/Certification Record of Clearance | Yes [ ] No [ ] | Note: |
| State of Texas Debarred Vendor List Cleared | Yes [ ] No [ ] | Note: |
| Verified By: | Yes [ ] No [ ] | Date: |

## ATTACHMENT D: CUSTOMER/CLIENT REFERENCES

Respondents shall use Attachment D to describe a minimum of three (3) and maximum of five (5) references for jobs, and corresponding references, completed within last five (5) years.

**Respondent's Name:** Rob Via

The references shall illustrate recent experience successfully completing work of a similar nature and scope as the work described in this RFP. This form may be modified as needed to comply with the requirement to document company information. ***Failure to return this attachment (or a reasonable facsimile) may result in the proposal being considered non-responsive. Failure to provide references may result in the proposal being considered non-responsive.***

**REFERENCE 1:**

| | |
|---|---|
| **Company Name:** | Furnished on receipt of order |
| **Company Address:** | |
| **Contact Name/Title/Phone:** | |
| **Contact Email:** | |
| **Contract Award Date:** | |
| **Contract Completion Date:** | |
| **Contract Project Name:** | |
| **Brief Description of Services:** | |

**REFERENCE 2:**

| | |
|---|---|
| Company Name: | |
| Company Address: | |
| Contact Name/Title/Phone: | |
| Contact Email: | |
| Contract Award Date: | |
| Contract Completion Date: | |
| Contract Project Name: | |
| Brief Description of Services: | |

**REFERENCE 3:**

| | |
|---|---|
| Company Name: | |
| Company Address: | |
| Contact Name/Title/Phone: | |
| Contact Email: | |
| Contract Award Date: | |
| Contract Completion Date: | |
| Contract Project Name: | |
| Brief Description of Services: | |

**REFERENCE 4:**

| | |
|---|---|
| Company Name: | |
| Company Address: | |
| Contact Name/Title/Phone: | |
| Contact Email: | |
| Contract Award Date: | |
| Contract Completion Date: | |
| Contract Project Name: | |
| Brief Description of Services: | |

**REFERENCE 5:**

| | |
|---|---|
| Company Name: | |
| Company Address: | |
| Contact Name/Title/Phone: | |
| Contact Email: | |
| Contract Award Date: | |
| Contract Completion Date: | |
| Contract Project Name: | |
| Brief Description of Services: | |

## ATTACHMENT E: CERTIFICATE OF INSURANCE
### (PROPOSAL RESPONDER SUPPLIES INSURANCE WITH THE PROPOSAL PACKAGE)

**INSURANCE REQUIREMENTS**

If requested, the Respondent shall supply an original, certified copy of an insurance certificate listing **the Entity** as additional insured. The successful Respondent will be required to maintain, at all times during performance of the contract, the insurance detailed below. Failure to provide this insurance certificate within the specified amount of time may result in disqualification of bid.

a. Workers' Compensation Insurance as required by laws and regulations applicable to and covering employees of Contract engaged in the performance of the work under this agreement with a limit of not less than $1,000,000.00.

b. Employers' Liability Insurance protecting Responder against common law liability, in the absence of statutory liability, for employee bodily injury arising out of the master-servant relationship with a limit of not less than $1,000,000.00.

c. Comprehensive General Liability Insurance including products/completed operation with limits of liability of not less than: Bodily Injury $1,000,000.00 per each person, $2,000,000.00 per each occurrence/ aggregate; Property Damage $1,000,000.00 per each occurrence;

d. Excess Liability Insurance Comprehensive General Liability, Comprehensive Automobile Liability and coverages afforded by the policies above, with the minimum limits of $_____ excess of specified limits.

FURNISHED ON RECEIPT OF ORDER

# ATTACHMENT F: ETHICS AND CONFLICT OF INTEREST ACKNOWLEDGEMENT

Public servants are expected to conduct themselves impartially and in a manner that inspires public confidence, while ensuring that responsible contractors have fair and equal access to governmental procurement.

The City of La Marque, Galveston County is committed to protection of government integrity, while also facilitating the recruitment and retention of the skilled personnel necessary to support its operations. To achieve this objective, The City of La Marque, Galveston County has established standards of ethical conduct and conflict of interest policies and expects all vendors, contractors, and subrecipients to adhere to the same core principles as described below.

To achieve these standards, it is essential that those doing business with the City of La Marque, Galveston County also observe the ethical standards prescribed here.

I acknowledge that it is a breach of ethics to attempt to influence any public employee, elected official, or department head to violate the standards of ethical conduct set forth in this code.

I further acknowledge that it is a breach of ethics for any employee of City of La Marque, Galveston County or a vendor doing business with the City of La Marque, Galveston County to participate directly or indirectly in a procurement when the employee or vendor knows that:

A. The employee or any member of the employee's immediate family or household has a substantial financial interest in a company responding to a City of La Marque, Galveston County procurement.

B. A business or organization in which the employee or any member of the employee's immediate family has a financial interest pertaining to the procurement.

I understand that it is a breach of ethics to offer, give, or agree to give any employee of City of La Marque, Galveston County, or for any employee to solicit, demand, accept, or agree to accept from a vendor, a gratuity of consequence or any offer of employment in connection with any decision, approval, disapproval, recommendation, preparation, or any part of a program requirement or purchase request influencing the content of specification or procurement standard, rendering of advice, investigation, auditing, or in any other advisory capacity in any proceeding or controversy, any particular matter pertaining to any program requirement, contract or subcontract, or to any solicitation or proposal therefore pending before City of La Marque, Galveston County.

I acknowledge that it is a breach of ethics for any payment, gratuity, or offer of employment to be made by or on behalf of a subcontractor under a contract to the prime contractor or higher tier subcontractor for any contract for City of La Marque, Galveston County as an inducement for the award of a contract or order.

I certify that I have read and understand the ethical standards set forth by City of La Marque, Galveston County and agree to comply with them in all business dealings with the City of La Marque, Galveston County.

Rob Via

SIGNATURE, VENDOR AUTHORIZED REPRESENTATIVE

ROB VIA, BUSINESS DEVELOPMENT MANAGER

PRINTED NAME, TITLE

R. B. EVERETT & COMPANY

COMPANY

10/24/24

DATE

## ATTACHMENT G: STATEMENT OF CONFLICTS OF INTEREST (IF ANY)

The Respondent vendor must describe any conflicts of interest regarding the goods and or services associated with this solicitation.

**The Respondent shall complete and submit Form CIQ (Attachment I) if the service provider or key employees have conflicts regarding these services.**

The conflict of interest statement is required if the service provider or key employees have conflicts regarding the services and a plan for mitigating the conflict(s).

**The Entity** may in its sole discretion determine whether a conflict disqualifies a firm, and/or whether a conflict mitigation plan is acceptable.

**If the Respondent does not identify a conflict, then they should enter no conflict identified on the Submission Checklist (Attachment A).**

# CONFLICT OF INTEREST QUESTIONNAIRE
**For vendor doing business with local governmental entity**

**FORM CIQ**

**This questionnaire reflects changes made to the law by H.B. 23, 84th Leg., Regular Session.**

This questionnaire is being filed in accordance with Chapter 176, Local Government Code, by a vendor who has a business relationship as defined by Section 176.001(1-a) with a local governmental entity and the vendor meets requirements under Section 176.006(a).

By law this questionnaire must be filed with the records administrator of the local governmental entity not later than the 7th business day after the date the vendor becomes aware of facts that require the statement to be filed. *See* Section 176.006(a-1), Local Government Code.

A vendor commits an offense if the vendor knowingly violates Section 176.006, Local Government Code. An offense under this section is a misdemeanor.

| OFFICE USE ONLY |
| --- |
| Date Received |

**1** **Name of vendor who has a business relationship with local governmental entity.**

R. B. EVERETT & COMPANY

**2** ☐ **Check this box if you are filing an update to a previously filed questionnaire.** (The law requires that you file an updated completed questionnaire with the appropriate filing authority not later than the 7th business day after the date on which you became aware that the originally filed questionnaire was incomplete or inaccurate.)

**3** **Name of local government officer about whom the information is being disclosed.**

N/A

Name of Officer

**4** **Describe each employment or other business relationship with the local government officer, or a family member of the officer, as described by Section 176.003(a)(2)(A). Also describe any family relationship with the local government officer. Complete subparts A and B for each employment or business relationship described. Attach additional pages to this Form CIQ as necessary.**

A. Is the local government officer or a family member of the officer receiving or likely to receive taxable income, other than investment income, from the vendor?

☐ Yes ☒ No

B. Is the vendor receiving or likely to receive taxable income, other than investment income, from or at the direction of the local government officer or a family member of the officer AND the taxable income is not received from the local governmental entity?

☐ Yes ☒ No

**5** **Describe each employment or business relationship that the vendor named in Section 1 maintains with a corporation or other business entity with respect to which the local government officer serves as an officer or director, or holds an ownership interest of one percent or more.**

City of Lamarque is assigned account in a sales territory

**6** ☐ Check this box if the vendor has given the local government officer or a family member of the officer one or more gifts as described in Section 176.003(a)(2)(B), excluding gifts described in Section 176.003(a-1).

**7**

Signature of vendor doing business with the governmental entity

10/24/24

Date

Form provided by Texas Ethics Commission www.ethics.state.tx.us Revised 1/1/2021

## CONFLICT OF INTEREST QUESTIONNAIRE
## For vendor doing business with local governmental entity

A complete copy of Chapter 176 of the Local Government Code may be found at http://www.statutes.legis.state.tx.us/Docs/LG/htm/LG.176.htm. For easy reference, below are some of the sections cited on this form.

**Local Government Code § 176.001(1-a):** "Business relationship" means a connection between two or more parties based on commercial activity of one of the parties. The term does not include a connection based on:

(A) a transaction that is subject to rate or fee regulation by a federal, state, or local governmental entity or an agency of a federal, state, or local governmental entity;

(B) a transaction conducted at a price and subject to terms available to the public; or

(C) a purchase or lease of goods or services from a person that is chartered by a state or federal agency and that is subject to regular examination by, and reporting to, that agency.

**Local Government Code § 176.003(a)(2)(A) and (B):**

(a) A local government officer shall file a conflicts disclosure statement with respect to a vendor if:

***

(2) the vendor:

(A) has an employment or other business relationship with the local government officer or a family member of the officer that results in the officer or family member receiving taxable income, other than investment income, that exceeds $2,500 during the 12-month period preceding the date that the officer becomes aware that

(i) a contract between the local governmental entity and vendor has been executed; or

(ii) the local governmental entity is considering entering into a contract with the vendor;

(B) has given to the local government officer or a family member of the officer one or more gifts that have an aggregate value of more than $100 in the 12-month period preceding the date the officer becomes aware that:

(i) a contract between the local governmental entity and vendor has been executed; or

(ii) the local governmental entity is considering entering into a contract with the vendor.

**Local Government Code § 176.006(a) and (a-1)**

(a) A vendor shall file a completed conflict of interest questionnaire if the vendor has a business relationship with a local governmental entity and:

(1) has an employment or other business relationship with a local government officer of that local governmental entity, or a family member of the officer, described by Section 176.003(a)(2)(A);

(2) has given a local government officer of that local governmental entity, or a family member of the officer, one or more gifts with the aggregate value specified by Section 176.003(a)(2)(B), excluding any gift described by Section 176.003(a-1); or

(3) has a family relationship with a local government officer of that local governmental entity.

(a-1) The completed conflict of interest questionnaire must be filed with the appropriate records administrator not later than the seventh business day after the later of:

(1) the date that the vendor:

(A) begins discussions or negotiations to enter into a contract with the local governmental entity; or

(B) submits to the local governmental entity an application, response to a request for proposals or bids, correspondence, or another writing related to a potential contract with the local governmental entity; or

(2) the date the vendor becomes aware:

(A) of an employment or other business relationship with a local government officer, or a family member of the officer, described by Subsection (a);

(B) that the vendor has given one or more gifts described by Subsection (a); or

(C) of a family relationship with a local government officer.

## ATTACHMENT I: DISCLOSURE OF LOBBYING ACTIVITIES
## SF-LLL CERTIFICATION REGARDING LOBBYING
***(TO BE SUBMITTED WITH EACH BID OR OFFER EXCEEDING $100,000)***

The undersigned certifies, to the best of his or her knowledge and belief, that:

(a) No Federal appropriated funds have been paid or will be paid, by or on behalf of the undersigned, to any person for influencing or attempting to influence an officer or employee of an agency, a Member of Congress, an officer or employee of Congress, or an employee of a Member of Congress in connection with the awarding of any Federal contract, the making of any Federal grant, the making of any Federal loan, the entering into of any cooperative agreement, and the extension, continuation, renewal, amendment, or modification of any Federal contract, grant, loan, or cooperative agreement.

(b) If any funds other than Federal appropriated funds have been paid or will be paid to any person for influencing or attempting to influence an officer or employee of any agency, a Member of Congress, an officer or employee of Congress, or an employee of a Member of Congress in connection with this Federal contract, grant, loan, or cooperative agreement, the undersigned shall complete and submit Standard Form-LLL, "Disclosure of Lobbying Activities," in accordance with its instructions.

(c) The undersigned shall require that the language in paragraphs (a) and (b) of this anti-lobbying certification be included in the award documents for all subawards at all tiers (including subcontracts, subgrants, and contracts under grants, loans, and cooperative agreements) and that all subrecipients shall certify and disclose accordingly.

This certification is a material representation of fact upon which reliance was placed when this transaction was made or entered into. Submission of this certification is a prerequisite for making or entering into this transaction imposed by 31, U.S.C. § 1352 (as amended by the Lobbying Disclosure Act of 1995).

The Contractor, R. B. EVERETT & COMPANY (insert business name), certifies or affirms the truthfulness and accuracy of each statement of its certification and disclosure, if any. In addition, the Contractor understands and agrees that the provisions of 31 U.S.C. § 3801 et seq., apply to this certification and disclosure, if any.

| | |
|---|---|
| **SIGNATURE** | Rob Via |
| **NAME OF AUTHORIZED AGENT** | ROB VIA |
| **TITLE OF AUTHORIZED AGENT** | BUSINESS DEVELOPMENT MANAGER |
| **DATE** | 10/24/24 |

# DISCLOSURE OF LOBBYING ACTIVITIES – INSTRUCTIONS

Instructions, searching existing data sources, gathering, and maintaining the data needed, and completing and reviewing the collection of information. Send comments regarding the burden estimate or any other aspect of this collection of information, including suggestions for reducing this burden, to the Office of Management and Budget, Paperwork Reduction Project (0348-0046), Washington, DC 20503. Approved by OMB 0348-0046. Complete this form to disclose lobbying activities pursuant to 31 U.S.C. 1352

| 1.Type of Federal Action: | 2. Status of Federal Action: | 3. Report Type: |
|---|---|---|
| ☐ a. contract<br>☐ b. grant<br>☐ c. cooperative agreement<br>☐ d. loan<br>☐ e. loan guarantee<br>☐ f. loan insurance | ☐ a. bid/offer/application<br>☐ b. initial award<br>☐ c. post-award | ☐ a. initial filing<br>☐ b. material change |

| 4. Name and Address of Reporting Entity:<br>☐ Prime ☐ Subawardee Tier _____, *if known:*<br>Name:<br>Street Address:<br>City, State, Zip:<br>**Congressional District, if known:** | 5. If Reporting Entity in No. 4 is Subawardee, Enter Name and Address of Prime:<br>Name:<br>Street Address:<br>City, State, Zip:<br>**Congressional District, if known:** |
|---|---|
| 6. Federal Department/Agency: | 7. Federal Program Name/Description:<br>CFDA Number, *if applicable*: _____ |
| 8. Federal Action Number, *if known:* | 9. Award Amount, *if known:*<br>$ |
| 10a. Name and Address of Lobbying Registrant<br>Name (First, MI, Last): N/A<br>Street Address:<br>City, State, Zip: | 10b. Individuals Performing Services<br>*(including address if different from No. 10a)*<br>Name (First, MI, Last):<br>Street Address: N/A<br>City, State, Zip: |

**11.** Information requested through this form is authorized by Title 31 U.S.C., Section 1352. This disclosure of lobbying activities is a material representation of fact upon which reliance was placed by the tier above when this transaction was made or entered into. This disclosure is required pursuant to 31 U.S.C. 1352. This information will be reported to the Congress semi-annually and will be available for public inspection. Any person who fails to file the required disclosure shall be subject to a civil penalty of not less than $10,000 and not more than $100,000 for each such failure.

**Signature:** Rob Via

**Name:** Rob Via **Title:** Business Development Manager

**Telephone:** 281-991-8161 **Date:** 10/24/24

| Federal Use Only | Authorized for Local Reproduction<br>Standard Form – LLL (Rev. 7-97) |
|---|---|

# ATTACHMENT J:TEXAS ETHICS COMMISSION CERTIFICATE OF INTERESTED PARTIES (FORM 1295)

*(TO BE COMPLETED BY THE AWARDED VENDOR PRIOR TO CONTRACT EXECUTION)*

**CERTIFICATE OF INTERESTED PARTIES** **FORM 1295**

Complete Nos. 1 - 4 and 6 if there are interested parties.
Complete Nos. 1, 2, 3, 5, and 6 if there are no interested parties.

OFFICE USE ONLY

1 Name of business entity filing form, and the city, state and country of the business entity's place of business.

2 Name of governmental entity or state agency that is a party to the contract for which the form is being filed.

3 Provide the identification number used by the governmental entity or state agency to track or identify the contract, and provide a description of the services, goods, or other property to be provided under the contract.

| 4 Name of Interested Party | City, State, Country (place of business) | Nature of Interest (check applicable) | |
|---|---|---|---|
| | | Controlling | Intermediary |
| | | | |
| | | | |
| | | | |
| | | | |
| | | | |
| | | | |
| | | | |

5 Check only if there is NO Interested Party. ☐

6 UNSWORN DECLARATION

My name is _____, and my date of birth is _____.

My address is _____, _____, _____, _____, _____.
(street) (city) (state) (zip code) (country)

I declare under penalty of perjury that the foregoing is true and correct.

Executed in _____ County, State of _____, on the _____ day of _____, 20_____.
(month) (year)

_____
Signature of authorized agent of contracting business entity
(Declarant)

ADD ADDITIONAL PAGES AS NECESSARY

Form provided by Texas Ethics Commission www.ethics.state.tx.us Revised 12/22/2017

Must file online at www.ethics.state.tx.us/File

FURNISHED ON RECEIPT OF ORDER

## ATTACHMENT K: BIDDER'S CERTIFICATION

In accordance with Texas Government Code Sections 2252.001 through 2252.004 (relating to bids by nonresident contractors), the pertinent portion of the Act has been extracted and is as follows:

1. "Nonresident bidder" refers to a person who is not a resident.
2. "Resident bidder" refers to a person whose principal place of business is in this state, including a contractor whose ultimate parent company or majority owner has its principal place of business in this state.

A governmental entity may not award a governmental contract to a nonresident bidder unless the nonresident underbids the lowest bid submitted by a responsible resident bidder by an amount that is not less than the greater of the following:

1. the amount by which a resident bidder would be required to underbid the nonresident bidder to obtain a comparable contract in the state in which the nonresident's principal place of business is located; or
2. the amount by which a resident bidder would be required to underbid the nonresident bidder to obtain a comparable contract in the state in which a majority of the manufacturing relating to the contract will be performed.

I certify that R. B. EVERETT & COMPANY (Company Name) is a

[X] **Resident bidder of Texas** as defined in Section 2252.001(4), Texas Government Code,

**OR**

[ ] **Nonresident bidder** as defined in Section 2252.001(3), Texas Government Code, and our principal place of business is located at _____ (City and State).

**Note: If the Respondent is an out-of-state company, a Certificate of Authority from the Secretary of State to do business in Texas must be provided.**

| | |
|---|---|
| **SIGNATURE** |  |
| **NAME OF AUTHORIZED AGENT** | ROB VIA |
| **TITLE OF AUTHORIZED AGENT** | BUSINESS DEVELOPMENT MANAGER |
| **DATE** | 10/24/24 |

## ATTACHMENT L: NON-COLLUSION AFFIDAVIT

### NON-COLLUSION AFFIDAVIT

STATE OF TEXAS §
§
COUNTY OF HARRIS §

By the signature below, the signatory for the bidder certifies that neither he/she nor the firm, corporation, partnership or institution represented by the signatory or anyone acting for the firm bidding this project has violated the antitrust laws of this State, codified at Section 15.01, *et seq.*, Texas Business and Commerce Code, or the Federal antitrust laws, nor communicated directly or indirectly the bid made to any competitor or any other person engaged in the same line of business, nor has the signatory or anyone acting for the firm, corporation or institution submitting a bid committed any other act of collusion related to the development and submission of this bid proposal.

Signature: Rob Via

Printed Name: ROB VIA

Title: BUSINESS DEVELOPMENT MANAGER

Company: R. B. EVERETT & COMPANY

Date: 10/24/24

SUBSCRIBED and sworn to before me the undersigned authority by Rob Via on the 24th day of October, 20 24 on behalf of said bidder.

RITA WEBB
Notary Public, State of Texas
Comm. Expires 10-15-2027
Notary ID 137497-0

Rita Webb
Notary Public in and for the
State of Texas

My commission expires: 10/15/27

# APPENDIX I – SAMPLE CONTRACT

## SAMPLE CONTRACT – INVITATION FOR BID NON-CONSTRUCTION ONLY
## CITY OF LA MARQUE
## AMERICAN RESCUE PLAN ACT (ARPA) PROGRAM
## GENERAL SERVICES, SUPPLIES, AND/OR EQUIPMENT CONTRACT

| | |
|---|---|
| **Vendor Name** | Vendor Name |
| **Vendor Unique Entity Identifier (UEI) if available** | XXXXXXXXXXXX |
| **Period of Performance Start Date** | |
| **Period of Performance End Date** | |
| **Amount of Federal Funds Obligated by this Agreement** | $000,000 |
| **Assisted Listing Number (ALN) #** 21.027 | **FAIN #** |

### INTRODUCTION

THIS CONTRACT for General Services, Supplies, and/or Equipment ("Contract") is made and entered into this [Date], by and between [City of La Marque], Texas, hereinafter referred to as the "Entity" and [Vendor Name], hereinafter referred to as the "Vendor." Entity and Vendor are sometimes each referred to as a "Party" and collectively "Parties."

The following recitals are incorporated in and made a part of this Contract.

WHEREAS, on March 11, 2021, President Biden signed the U.S. Senate-amended H.R. 1319 (P.L. 117-2) known as the American Rescue Plan Act (hereinafter "ARPA"); and

WHEREAS, under ARPA Section 603 (c)(1)(A) and (3) and the Final Rule 31 CFR 35.6, recipients may use Coronavirus State and Local Fiscal Recovery Funds ("SLFRF") to allocate funds for the provision of government services and/or make necessary investments in water, sewer, and broadband infrastructure; and

WHEREAS, the Entity has determined that it has the objective of providing services to its residents; and

WHEREAS, the Entity has been awarded ARPA funds by the U.S. Department of the Treasury ("Treasury") which have been distributed to the Entity from ARPA for covered costs and eligible expenses to be incurred during the period which began on March 3, 2021 (the date ARPA became law) until December 31, 2024 (to be fully expended by December 31, 2026); and

WHEREAS, the Entity desires to disburse funds to the Vendor to perform certain services or provide certain supplies or equipment in connection therewith as set forth in this Contract and in the Scope of Services attached hereto; and

WHEREAS, Vendor has represented to the Entity that it is duly qualified, eligible, and willing to provide the services identified herein and in the Scope of Services attached hereto.

NOW, THEREFORE, in consideration of the foregoing recitals and the terms and conditions set forth herein, the Parties hereto do mutually agree as follows:

## SECTION 1. CONTRACT ADMINISTRATION

### SECTION 1.1 CONTACT INFORMATION & NOTICES

For the purposes of this Contract, the Entity's Representative listed below will serve as the primary point of contact for the Vendor. All required reports and communication shall be directed to this liaison and other local personnel as appropriate. The Vendor shall designate a Representative to act on Vendor's behalf for all purposes, including execution of Change Orders and Requests for Payment.

Any notice or communication required or permitted to be given under this Contract must be in writing. The initial contact information of the parties, which one party may change by giving written notice to the other party, are as follows:

| | | | |
|---|---|---|---|
| **Entity Name** | City of La Marque | **Vendor Name** | R. B. Everett & Company |
| **Entity Address 1** | 1111 Bayou Road | **Vendor Address 1** | 8211 Red Bluff Rd |
| **Entity Address 2** | La Marque, Texas 77568 | **Vendor Address 2** | Pasadena, Tx 77507 |
| **Entity Representative for Project** | | **Vendor Representative for Project** | |
| **Name** | Amanda Hobby | **Name** | Rob Via |
| **Title** | Assistant Director of Public Works | **Title** | Business Dev. Manager |
| **Phone** | (409) 795-7996 | **Phone** | 281-991-8161 |
| **Email** | a.hobby@cityoflamarque.org | **Email** | rvia@rbeverett.com |
| **Entity Billing Contact** | | **Vendor Billing Contact** | |
| **Name** | Gina Galicia | **Name** | Same as Representative |
| **Title** | Accounts Payable Clerk | **Title** | |
| **Phone** | (409) 938-9214 | **Phone** | |
| **Email** | g.galicia@cityoflamarque.org | **Email** | |

## SECTION 1.2 PARTS INCORPORATED

Parts Incorporated. In addition to the Exhibits identified below which are incorporated into this Contract, it is understood and agreed that additional terms of this Contract are to be performed in accordance with the proposal documents (scope of work, images, and specifications), submitted proposal response and related exhibits, affidavits, addendums, statutory requirements, and the ARPA Terms & Conditions.

| | Exhibits |
|---|---|
| Exhibit A1 | Scope of Work |
| Exhibit A2 | Payment & Pricing Schedule |
| Exhibit A3 | Request for Payment |
| Exhibit B | ARPA Required Contract Provisions |
| Exhibit C | Other Relevant Information/Special Conditions for Construction |
| Exhibit D | Insurance Certificate |
| Exhibit E | Bid, Performance, and Payment Bonds |
| Exhibit F | Eligibility Verification (SAM.gov) |
| Exhibit G | Certificate of Interested Parties (Form 1295) |

## SECTION 1.4 CONTRACT DOCUMENTS

By reference, the Contract Documents consist of:

a. This Contract and all exhibits listed, contained, or referenced in this Contract.

b. All Addenda issued before the Effective Date of this Contract;

c. All Alternates accepted by the Entity before the Effective Date of this Contract;

d. All Change Orders issued after the Effective Date of this Contract; and

e. The response submitted by Vendor in response to the IFB issued by Entity for this Project.

The Contract and Exhibit Documents form the entire and integrated Contract between Entity and Vendor, and supersede all prior negotiations, representations, or agreements, written or oral. To the extent of any conflict between Vendor's Proposal and any other Contract Document, the Contract Documents shall govern.

If there is an irreconcilable difference between or among the various documents that make up the Contract Documents, the interpretation that provides for a higher quality of material and/or workmanship will prevail over all other interpretations.

### 1.4.1 Term of Contract and Delivery Schedule – Commencement of Work

Entity shall issue a Notice to Proceed (NTP) identifying the date for commencement of the Work. Vendor shall achieve substantial completion of the Work within 90 calendar days after the commencement date; as such completion date may be extended by approved Change Orders. THE TIME SET FOR COMPLETION OF THE WORK IS AN ESSENTIAL ELEMENT OF THE CONTRACT. In any event, all of the services required and performed hereunder shall be completed no later than December 31, 2024.

### 1.4.2 Pre-Existing Conditions

Vendor acknowledges that it has been provided access to the existing improvements and conditions on the Project site and that it has thoroughly investigated those conditions. Vendor's investigation was instrumental in preparing its bid to perform the Work. Vendor shall not make or be entitled to any adjustment to the Contract Time or the Contract Sum arising from Project conditions that the Vendor discovered or, in the exercise of reasonable care, should have discovered

in Vendor's investigation.

1.4.3 Liquidated Damages

Vendor and Entity agree that a breach of this Contract as to completion time will cause damage to the Entity, but further agree that such damage cannot be accurately measured. Therefore, the Parties agree that $100.00 shall be subtracted from the Contract amount for each and every calendar day that the Work or any portion of the Work remains uncompleted after the expiration of the time period specified in the Notice to Proceed, or as extended by a change order.

1.4.4 Dispute Resolution

Disputes arising under the Contract shall be submitted to a process of resolution pursuant to alternative dispute resolution practices, such as mediation, binding arbitration, or non-binding arbitration pursuant to industry standards, prior to being submitted to a court for adjudication. It is understood that the Entity shall have the right to request mediation if services being provided are deemed deficient in any way.

1.4.5 Acquisition, Merger, Sale and/or Transfer of Business, etc.

It is understood by all parties that if, during the life of the Contract, the Vendor disposes of his/her business concern by acquisition, merger, sale, and or/transfer or by any means conveys his/her interest(s) to another party, all obligations are transferred to that new party. In this event, the new vendor will be required to submit all documentation/legal instruments that were required in the original bid/contract. Any change shall be approved by the Entity, who retains the right to reject the transfer of the contract.

1.4.6 Termination of Contract For Cause

This Contract may be terminated by the Entity for cause, including any nonperformance by the Vendor; failure of the Vendor to fulfill in a timely and proper manner its obligations under this Contract; or violation of any of the covenants, agreements, or stipulations of the Contract, upon thirty (30) days' written notice to Vendor including a statement of the reasons, therefore. The determination of the Entity as to the cause of termination and the appropriateness thereof shall be final and binding upon both Entity and Vendor. Cause for termination shall include any material failure by Vendor to comply with any terms of this Contract.

a. In such event, all finished or unfinished services, documents, data, maps, studies, surveys, drawings, models, photographs, and reports prepared by the Vendor under this Contract shall, at the option of the Entity, become its property, and the Vendor shall be entitled to receive just and equitable compensation for any work satisfactorily completed hereunder.

b. Notwithstanding the above, the Vendor shall not be relieved of liability to the Entity for damages sustained by the Entity by virtue of any breach of this Contract by the Vendor, and the Entity may withhold any payments to the Vendor for the purposes of set-off until such time as the exact amount of damages due the Entity from the Vendor is determined.

c. The Vendor agrees to indemnify and hold the Entity harmless from any liability to subcontractors or suppliers concerning payment for work performed or goods supplied arising out of the lawful termination of the Contract by the Entity under this provision.

d. In case of default by the Vendor, the Entity may procure the goods or services from other sources and hold the Vendor responsible for any excess cost.

e. Continuation of the terms of the Contract beyond the fiscal year is contingent on availability of funds in the following year's budget. In the event of unavailability of such funds, the Entity reserves the right to cancel the Contract.

f. If this Contract is terminated for cause, excluding funding discontinuance or disapproval, Vendor shall have the right to attempt to cure its failure during the thirty (30) day period prior to termination to the satisfaction of the Entity at the Entity's sole discretion.

### 1.4.7 Termination of Contract For Convenience of the Entity

The Entity may terminate this Contract at any time by giving at least thirty (30) days' notice in writing to the Vendor. If the Vendor is terminated by the Entity as provided herein, the Vendor will be paid for actual services provided or delivered purchases that are determined acceptable at the sole discretion of the Entity, less payments of compensation previously made. Vendor

### 1.4.8 Post Expiration and Termination Procedures

Upon expiration or in the event of a prior termination, all remaining and unspent ARPA funds, shall immediately become the sole and separate property of the Entity and the Vendor shall perform all acts and execute all instruments necessary to transfer and assign such funds to the Entity. All finished or unfinished documents, data, studies, reports, and work products prepared by the Vendor under this Contract or with grant funds shall, at the option of the Entity, become Entity's property.

### 1.4.9 Transitional Period

In the event services are terminated by contract expiration or by voluntary termination by either the Vendor or the Entity, the Vendor shall continue all terms and conditions of said Contract for a period not to exceed thirty (30) days at the Entity's request.

### 1.4.10 Ownership of Material

The Entity shall retain all of its rights and interest in any and all documents and property, both hard copy and digital furnished by the Entity to the Vendor for the purpose of assisting the Vendor in the performance of this Contract. All such items shall be returned immediately to the Entity at the expiration or termination of the Contract or completion of any related services pursuant thereto, whichever comes first. None of the documents and/or property shall, without the written consent of the Entity, be disclosed to others or used by the Vendor or permitted by the Vendor to be used by their parties at any time except in the performance of the resulting Contract. Ownership of all data, materials and documentation originated and prepared for the Entity pursuant to this Contract shall belong exclusively to the Entity. All data, reports, computerized information, programs, and materials related to this Project shall be delivered to and become the property of the Entity upon completion of the Project. The Vendor shall not have the right to use, sell, or disclose the total of the interim or final work products, or make available to third parties, without the prior written consent of the Entity.

## SECTION 1.5 CONTRACT SUM AND PAYMENTS

The Vendor shall be compensated per the schedule below. Payment to the Vendor shall be based on satisfactory completion of identified services and/or deliverables and payment/invoicing terms as stated in the IFB, or as mutually agreed upon and contained in this Contract. Payment is expressly contingent upon the availability of ARPA funding.

### 1.5.1 Contract Sum

Entity shall pay Vendor for performance of its obligations under this Contract, including the Base Proposal and Alternate Proposals (if any), the sum of [Spelled out dollar amount here] ($000,000.00), and make payment in accordance with the provisions of this Section.

### 1.5.2 Payment & Pricing Schedule

A Payment & Pricing Schedule (see **Exhibit A2**) subdividing the Project into its respective parts (f needed), and which includes values for all items comprising the Project will serve as the basis for payments made to Vendor.

### 1.5.3 Vendor's Payment Obligations

Vendor shall promptly pay all bills for labor and material performed and furnished by others in connection with this Contract.

a. Firm shall submit an invoice upon completion of each milestone. Deliverables will be considered complete only upon inspection and written acceptance by the Entity. Each invoice shall include deliverable(s) completed and

the price for each. **The final request for reimbursement must be received by City/County no later than September 30, 2026.**

### 1.5.4 Request for Payment

As instructed, all payment requests must be submitted on the Request for Payment (See **Exhibit A3**) including required attachments. Notwithstanding the certification of Vendor's payment requests, the Entity or its Representative will independently review Vendor's payment requests and make a determination as to the amount properly payable to Vendor.

### 1.5.5 Offsets; Deductions; Withholding

a. Entity is an agency of the State of Texas and materials and services utilized in the provision of services or purchases may be exempt from state and local taxes. Vendor is responsible for taking full advantage of all tax exemptions applicable to the Project. Entity will deduct from the Requests for Payment and from the Request for Final Payment any taxes paid for materials or services that were entitled to tax exemption.

b. Amounts assessed as liquidated damages per the above Section of this Contract and other amounts to which Entity is entitled by way of setoff or recovery, if any, shall be deducted from any amounts due Vendor.

c. Notwithstanding any other contractual provision to the contrary, Entity may withhold any payment from Vendor to the extent reasonably required to protect Entity interests under any of the following circumstances: failure to perform work in accordance with Contract Documents; insufficient documentation in Application for Payment; failure to pay subcontractors, employees, hired laborers or materials suppliers; failure to obtain, renew or maintain insurance coverage as required in this Contract; failure to meet schedule requirements or other scenarios that causes the Entity, in good faith judgment, to determine that the remaining balance will not be sufficient to complete the Work in accordance with this Contract. The right to withhold payment is contingent on giving Vendor a minimum of seven (7) calendar days' written notice of specific defects or defaults and an opportunity to cure same, and on Vendor's failure to cure or to take diligent steps to cure within such seven (7) calendar days.

### 1.5.6 Final Payment

Vendor's request for Final Payment must not be made until all Work is completed, all requirements of the Vendor Documents have been satisfied, and Vendor delivers the services or equipment.

## SECTION 2. ENTITY RESPONSIBILITIES

### SECTION 2.1 GENERAL

a. Entity will cooperate in a timely manner in providing information regarding its requirements.

b. Entity will review and provide final approval of the general schedule, setting the plan for milestone dates and completion or delivery.

c. If the Entity has actual knowledge of any fault or defect or non-conformance with the Specifications, the Entity shall give prompt written notice of such fault, defect, or non-conformance to Vendor.

d. The Entity may designate one or more inspectors of its own who will be given access to the Work as requested or needed. The provision of such inspectors will not reduce or lessen in any respect Vendor's responsibilities for the Work.

e. The Entity may furnish or obtain all legal, accounting, auditing, and insurance counseling services for itself as may be necessary for the Project.

## SECTION 3. SCOPE OF WORK

### SECTION 3.1 GENERAL

Vendor has overall responsibility for and shall furnish all materials, equipment, tools, and labor necessary and reasonably inferable to complete the Work, or any phase of the Work, in accordance with Entity's requirements and the terms of the Contract Documents, including the Drawings, Specifications, Addenda, details, and other documents prepared by Vendor and listed in the attached Exhibits, if applicable.

Vendor's duties as set forth herein shall at no time be in any way diminished by reason of any approval by the Entity nor shall Vendor be released from any liability by reason of such approval by Entity, it being understood that Entity at all times is ultimately relying upon Vendor's skill and knowledge in performing the services required hereunder.

### SECTION 3.2 PROJECT CONTROL

Vendor shall supervise and direct the Work and shall be solely responsible for means, methods, techniques, sequences, and procedures for the Work. Vendor shall promptly correct any defective or non-conforming Work at Vendor's sole expense and without cost to Entity.

### SECTION 3.3 SUBVENDORS

Vendor shall award and enter into all Subcontracts necessary and appropriate to provide all labor and materials for the scope of work.

a. Vendor shall monitor the Work of the Subcontractors as required and coordinate such Work with a goal to attain Substantial Completion not later than the date for Substantial Completion and at a cost not to exceed the Contract Sum.

b. Upon request, Vendor shall provide Entity with complete, unaltered copies of all Subcontracts, and all amendments thereto.

### SECTION 3.4 HUB SUBCONTRACTING PLAN

Vendor shall comply with the requirements of the HUB Subcontracting Plan and shall not make any changes to the HUB Subcontracting Plan without Entity's written approval.

### SECTION 3.5 KEY TASKS

a. Provide services and purchase of equipment in accordance with delivery schedules and other prescribed timelines herein.

b. Provide a warranty on all purchased equipment.

c. Provide excellent customer service. Firm shall be responsive to requests and communicate on a regular basis with the Entity.

d. Provide and maintain all original and copies of supporting documentation.

e. Furnish progress reporting as determined or requested by the Entity.

f. Support and assist the Entity during state/federal monitoring or auditing activities, including providing financial information, reports, and other requests that may be required.

### SECTION 3.6 SCHEDULING

Vendor is solely responsible for delivery of the services/equipment in accordance with the Contract Documents on or before the date specified in the Schedule.

### SECTION 3.7 NON-CONFORMING WORK

Entity may reject any defective or non-conforming Work on the Project of which Entity becomes aware and Vendor shall promptly correct any such defect at Vendor's own cost without increasing the Contract Sum. Upon discovering that any portion of the Work does not conform with Entity's design concept and/or requirements, including the Design Guidelines and Standard Specifications, due to an error or omission in any Construction Document materials prepared or furnished by or on behalf of Vendor, Vendor shall promptly correct such condition at no additional cost to Entity. If Vendor refuses or fails to correct (or improperly corrects) any such condition within a reasonable time after notice, Entity may cause the condition to be corrected and offset the cost of such correction against any monies owed to Vendor; provided, however, if no monies are owed Vendor at the time the condition is discovered or at the time the condition is corrected by Entity, Vendor shall promptly reimburse the Entity for all expenses incurred to correct the condition. Vendor shall warranty all corrective Work, whether performed by or through Vendor or by a third party retained by Entity in accordance with the immediately preceding sentence due to Vendor's refusal or failure to correct properly any non-conforming Work.

### SECTION 3.8 INDEMNIFICATION

Vendor covenants and agrees to indemnify, hold harmless and defend, at its own sole expense, the Entity and its officers, agents, servants, and employees from and against any and all claims or suits for property loss or damage and/or personal injury, including death, to any and all persons, of whatsoever kind or character, whether real or asserted, arising out of or in connection with the execution, performance, attempted performance, or nonperformance of the services under this Contract and/or the operations, activities, and services of the activities described herein; and Vendor hereby assumes all liability and responsibility of the entity and its officers, agents, servants, and employees for any and all claims or suits for property loss or damage and/or personal injury, including death, to any and all persons, of whatsoever kinds or character, whether real or asserted, arising out of or in connection with the execution, performance, attempted performance, or nonperformance of the services or this Contract and/or the operations, activities, and services described herein. Vendor likewise covenants and agrees to and does hereby indemnify and hold harmless entity from and against any and all injury, damage, or destruction of property of entity, arising out of or in connection with all acts or omissions of Vendor, its officers, members, agents, employees, contractors, subcontractors, invitees, licensees, and project participants. Vendor agrees to and shall release Entity, its agents, employees, officers, and legal representatives from all liability for injury, death, damage, or loss to persons or property sustained in connection with or incidental to performance of the services under this Contract.

Vendor shall require all of its contractors and subcontractors to include in its contracts and subcontracts a release and indemnity in favor of the Entity in substantially the same form as above. The indemnity and liability release provided for above shall not apply to any liability resulting from the sole negligence or fault of the Entity, its officers, agents, employees or separate Vendors, and in the event of joint and concurring negligence or fault of the Entity and Vendor, responsibility and indemnity, if any, shall be apportioned in accordance with the laws of the State of Texas, without waiving any governmental immunity available to the entity under Texas law and without waiving any defenses of the parties under Texas law.

The provisions of this section are solely for the benefit of the parties and are not intended to create or grant any rights, contractual or otherwise, to any other person or entity. This section survives termination or expiration of this Contract.

### SECTION 3.9 INSURANCE & BONDING

If applicable, Vendor shall provide Insurance and Bid, Performance, and Payment Bonds as prescribed by Entity in the Solicitation documentation and included here as **Exhibit D** and **Exhibit E.**

## SECTION 4. REQUIRED PROVISIONS

The Vendor shall comply with the following items:

### SECTION 4.1 TERMS AND CONDITIONS

The Vendor agrees to comply with the requirements of Section 503 of the American Rescue Plan Act (ARPA), regulations adopted by Treasury pursuant to Section 603(f) of the Act, and guidance issued by Treasury regarding the foregoing. Vendor also specifically agrees to comply with the ARPA Terms & Conditions attached to this Contract in **Exhibit B.**

## SECTION 4.2 DEBARMENT AND SUSPENSION

Vendor has provided proof of registration, active/good standing, and non-debarment status in the System for Award Management. Should this status change, the Vendor must notify the Entity immediately.

## SECTION 4.3 ASSURANCES OF COMPLIANCE WITH TITLE VI

The Vendor shall comply with Title VI of the Civil Rights Act of 1964, which prohibits recipients of federal financial assistance from excluding from a program or activity, denying benefits of, or otherwise discriminating against a person on the basis of race, color, or national origin (42 U.S.C. § 2000d et seq.), as implemented by the Department of the Treasury's Title VI regulations, 31 CFR Part 22, which are herein incorporated by reference and made a part of this contract. Title VI also includes protection to persons with "Limited English Proficiency" in any program or activity receiving federal financial assistance, 42 U.S.C. § 2000d et seq., as implemented by the Department of the Treasury's Title VI regulations, 31 CFR Part 22, and herein incorporated by reference and made a part of this contract.

## SECTION 4.4 LOBBYING CERTIFICATION & DISCLOSURE

No Federal appropriated funds have been paid or will be paid, by or on behalf of the undersigned, to any person for influencing or attempting to influence an officer or employee of an agency, a Member of Congress, an officer or employee of Congress, or an employee of a Member of Congress in connection with the awarding of any Federal contract, the making of any Federal grant, the making of any Federal loan, the entering into of any cooperative agreement, and the extension, continuation, renewal, amendment, or modification of any Federal contract, grant, loan, or cooperative agreement.

## SECTION 4.5 ETHICS MATTERS

Vendor and its employees, agents, representatives, and subcontractors have ready and understand the Entity's Conflict of Interest Policy, State of Texas Standards of Conduct and Conflict of Interest Provisions available at Government Code Chapter 572: Personal Financial Disclosure, Standards of Conduct, and Conflict of Interest (state.tx.us), and applicable state ethics laws and rules available. Neither Vendor nor its employees, agents, representatives, or subcontractors will assist or cause Entity employees to violate the Conflict of Interest policies, provisions described by State of Texas Standards of Conduct and Conflict of Interest Provisions, or applicable state ethics laws or rules.

## SECTION 4.6 MAINTENANCE AND ACCESS TO RECORDS

The Vendor shall maintain records and financial documents sufficient to evidence in compliance with Section 603(c) of the Act, Treasury's regulations implementing that section, and guidance issued by Treasury regarding the foregoing.

The Treasury Office of Inspector General, the Government Accountability Office and the Texas Office of the State Comptroller, or their authorized representatives, shall have the right of access to records (electronic and otherwise) of the Vendor in order to conduct audits or other investigations and all records shall be made available upon request. Records shall be maintained by the Vendor for a period of five (5) years after all funds have been expended or returned to the Treasury, whichever is later.

# SECTION 5. MISCELLANEOUS PROVISIONS

## SECTION 5.1 GENERAL

a. In any case one or more of the provisions contained in this Contract shall for any reason be held to be invalid, illegal, or unenforceable in any respect, such invalidity, illegality, or unenforceability shall not affect any other provision thereof and this Contract shall be construed as if such invalid, illegal, or unenforceable provision had never been contained herein.

b. If any action at law or in equity is necessary to enforce or interpret the terms of this Contract, the prevailing party shall be entitled to reasonable attorney's fees, costs, and necessary disbursements in addition to any other relief to which such party may be entitled.

c. This Contract may be amended by mutual agreement of the parties hereto and a writing to be attached to be

incorporated into this Contract.

d. Licenses, Permits, Taxes, Fees, Laws, and Regulations

i. Vendor warrants that it will obtain, maintain in effect, and pay the cost for all licenses, permits, or certifications that may be necessary for Vendor's performance of this Contract.

ii. Vendor will be responsible for the payment of all taxes, excises, fees, payroll deductions, employee benefits (if any), fines, penalties or other payments required by federal, state, or local law or regulation in connection with Vendor's performance of this Contract.

iii. Vendor will comply with and will be responsible for requiring its officers and employees to comply with all applicable federal, state, and local laws and regulations, and the rules and regulations of the Entity.

## SECTION 5.2 CAPACITY TO PERFORM

By execution of this Contract, Vendor is certifying that they have the capacity to perform and complete the Scope of Work as provided.

## SECTION 5.3 LIMITATION OF LIABILITY

Except for the obligation of Entity to pay Vendor certain fees, costs, and expenses to the extent expressly set forth in this Contract, the Entity shall have no liability to Vendor or to anyone claiming through or under Vendor by reason of the execution or performance of this Contract. Notwithstanding any obligation or liability of Entity to Vendor, no present or future partner or affiliate of the Entity or any agent, officer, director, or employee of the Entity or anyone claiming under the Entity, has or shall have any personal liability to Vendor or to anyone claiming through or under Vendor by reason of the execution or performance of this Contract.

## SECTION 5.4 ASSIGNMENT

This Contract is a personal service contract for the services of Vendor, and neither Vendor's interest in this Contract (including, but not limited to Vendor's fees due hereunder), nor Vendor's duties hereunder may be assigned or delegated to a third party except as specifically set forth in this Contract.

## SECTION 5.5 GOVERNING LAW AND VENUE

The Vendor agrees to comply with the requirements of Section 603 of the Act, regulations adopted by Treasury pursuant to Section 603(f) of the Act, and guidance issued by Treasury regarding the foregoing.

Additionally, all applicable local government codes for the State of Texas also apply to this Contract. All equipment, supplies, and work furnished under this Contract shall comply with applicable laws, ordinances, and regulations. Vendor shall obtain and pay for such permits and inspections as are required for the legal performance of this work, unless otherwise specified. Vendor shall comply with all federal and state laws and Entity's Ordinances and Codes applicable to the Vendor's operation under this Contract. These Specifications and the Contract resulting here from shall be fully governed by the laws of the State of Texas and shall be fully performable in La Marque (Entity Name), Texas, where venue for any proceeding arising hereunder will lie.

This Contract will be governed by the laws of the State of Texas without reference to its conflicts of law provisions. Venue for any suits arising from this Contract will be in a court of competent jurisdiction in Galveston County, Texas.

## SECTION 5.6 WAIVERS

No delay or omission by either Party in exercising any right or power accruing upon the non-compliance or failure of performance by the other Party of any provision of this Contract or the Contract Documents will impair any such right or power or be construed to be a waiver thereof. A waiver by either Party of any of the covenants, conditions, or agreements of this Contract or any of the Contract Documents to be performed by the other party will not be construed to be a waiver of any subsequent breach of this Contract or the Contract Documents or of any other covenant, condition or agreement contained in this Contract or the Contract Documents.

**SECTION 5.8 NEW LAWS**

Parties agree that if there is a change in any laws, rules, or regulations affecting the performance related to this Contract and enacted after the Effective Date of this Contract, the Parties will enter into good faith negotiations to renegotiate the affected terms of this Contract. N/A

BY: _____
(Entity Official)

_____
(Printed Name)

_____
(Title)

_____
(Date)

BY: _____
(Vendor's Authorized Representative)

_____
(Printed Name)

_____
(Title)

_____
(Date)

## SECTION 6. EXHIBITS

**THE FOLLOWING DOCUMENTS MUST BE COMPLETED AND ATTACHED TO THE CONTRACT:**

| | |
|---|---|
| Exhibit A1 | Scope of Work |
| Exhibit A2 | Payment & Pricing Schedule |
| Exhibit A3 | Request for Payment |
| Exhibit B | ARPA Required Provisions (ARPA Terms & Conditions) |
| Exhibit C | Other Relevant Information |
| Exhibit D | Insurance Certificate (if applicable) |
| Exhibit E | Bid, Performance, and Payment Bonds (if applicable) |
| Exhibit F | Eligibility Verification (SAM.gov) |
| Exhibit G | Certificate of Interested Parties (Form 1295) |

## Exhibit A1 – Scope of Work

To be populated with solicitation Scope of Work

N/A

## Exhibit A2 – Payment & Pricing Schedule

The terms for payment for the contract are as follows:

**Payment Schedule:**

Payment will be made within 30 days of a Request for Payment and only after delivery of all services and/or purchases and acceptance by the Entity.

**Pricing Schedule:**

Prices for all goods and/or services shall be all inclusive.

Entity is an agency of the State of Texas and materials and services utilized in the provision of services or purchases may be exempt from state and local taxes. Vendor is responsible for taking full advantage of all tax exemptions applicable to the Project. Entity will deduct from the Requests for Payment and from the Request for Final Payment any taxes paid for materials or services that were entitled to tax exemption.

**Lump Sum Price:** Vendor shall provide pricing in the table below to complete the scope of services contained in **Exhibit A1**, Scope of Work, in accordance with the specifications contained in this document. Costs include all applicable services (i.e. labor, materials, profit, bonding, insurance, permitting, general conditions, and other costs) to provide a turnkey product.

(Note to Entity: Component pricing should be based on the identified components of the scope of work contained in **Exhibit A1**). An example is provided below:

| SCOPE OF WORK | PRICE |
|---|---|
| | $ |
| N/A | $ |
| | $ |
| | $ |
| **TOTAL LUMP SUM PRICE (TOTAL OF ABOVE LINE ITEMS)** | **$** |

## Exhibit A3 – Request for Payment

| | | | |
|---|---|---|---|
| **Project Name:** | | | |
| **Vendor Name:** | | | |
| **Date of Request:** | | | |
| **Contact Name:** | | | |
| **Contact Phone:** | | **Contact Email:** | |

| Item for Payment | Description | Unit Cost or Percent Complete | # of Units | Total Amount |
|---|---|---|---|---|
| | N/A | | | |
| | | | | |
| | | | | |
| **TOTAL** | | | | |

| X | Attachments |
|---|---|
| | |
| | |

| Submitted By | |
|---|---|
| **Name and Title** | |
| **Signature** | |

**CERTIFICATION:** I certify that this Request for Payment contains costs associated with the provision of services in accordance with the terms of the contract. I also certify that all required documentary evidence has been submitted along with the Request for Payment as instructed, including any documentation associated with requirement to pay prevailing wages.

By signing this Request for Payment, I certify to the best of my knowledge and belief that information provided in this Request is true, complete, and accurate. I am aware that any false, fictitious, or fraudulent information, or the omission of any material fact, may subject me to criminal, civil or administrative penalties for fraud, false statements, false claims or otherwise.

**WARNING:** Section 1001 of Title 18 U.S. code makes it a criminal offense to make willful, false statements or misrepresentation of any material fact involving the use of or obtain federal funds.

# Exhibit B – ARPA Required Provisions

2 CFR 200.327 Contract provisions. The Non-Federal entity's contracts should contain applicable provisions described in Appendix II to Part 200—Contract Provisions for Non-Federal Entity Contracts Under Federal Awards. The Non-Federal entity's contracts must contain the provisions described in Appendix II to Part 200—Contract Provisions for Non-Federal Entity Contracts Under Federal Awards, as applicable.

| THRESHOLD | PROVISION | CITATION | PROVISION APPLIES TO |
|---|---|---|---|
| | 2 CFR 200 Appendix II (A-L) | | |
| >$250,000 (Simplified Acquisition Threshold) | Contracts for more than the simplified acquisition threshold, which is the inflation adjusted amount determined by the Civilian Agency Acquisition Council and the Defense Acquisition Regulations Council (Councils) as authorized by 41 U.S.C. 1908, must address administrative, contractual, or legal remedies in instances where contractors violate or breach contract terms, and provide for such sanctions and penalties as appropriate. | 2 CFR 200 APPENDIX II (A) | Contractor RFP/IFB<br>Contractor RFQ<br>Subrecipients |
| >$10,000 | All contracts in excess of $10,000 must address termination for cause and for convenience by the Non-Federal entity including the manner by which it will be affected and the basis for settlement. | 2 CFR 200 APPENDIX II (B) | Contractor RFP/IFB<br>Contractor RFQ<br>Subrecipients |
| None | Equal Employment Opportunity. Except as otherwise provided under 41 CFR Part 60, all contracts that meet the definition of "federally assisted construction contract" in 41 CFR Part 60-1.3 must include the equal opportunity clause provided under 41 CFR 60-1.4(b), in accordance with Executive Order 11246, "Equal Employment Opportunity" (30 FR 12319, 12935, 3 CFR Part, 1964-1965 Comp., p. 339), as amended by Executive Order 11375, "Amending Executive Order 11246 Relating to Equal Employment Opportunity," and implementing regulations at 41 CFR part 60, "Office of Federal Contract Compliance Programs, Equal Employment Opportunity, Department of Labor."<br>41 CFR 60-1.4 Equal opportunity clause.<br>(b) Federally assisted construction contracts. (1) Except as otherwise provided, each administering agency shall require the inclusion of the following language as a condition of any grant, contract, loan, insurance, or guarantee involving federally assisted construction which is not exempt from the requirements of the equal opportunity clause:<br>The [recipient] hereby agrees that it will incorporate or cause to be incorporated into any contract for construction work, or modification thereof, as defined in the regulations of the Secretary of Labor at 41 CFR Chapter 60, which is paid for in whole or in part with funds obtained from the Federal Government or borrowed on the credit of the Federal Government pursuant to a grant, contract, loan, insurance, or guarantee, or undertaken pursuant to any Federal program involving such grant, contract, loan, insurance, or guarantee, the following equal opportunity clause:<br>During the performance of this contract, the contractor agrees as follows:<br>(9) The contractor will not discriminate against any employee or applicant for employment because of race, color, religion, sex, sexual orientation, gender identity, or national origin. The contractor will take affirmative action to ensure that applicants are employed, and that employees are treated during employment without regard to their race, color, religion, sex, sexual orientation, gender identity, or national origin. Such action shall include, but not be limited to the following:<br>Employment, upgrading, demotion, or transfer; recruitment or recruitment advertising; layoff or termination; rates of pay or other forms of compensation; and selection for training, including apprenticeship. The contractor agrees to post in conspicuous places, available to employees and applicants for employment, notices to be provided setting forth the provisions of this nondiscrimination clause.<br>(10) The contractor will, in all solicitations or advertisements for employees placed by | 2 CFR 200 APPENDIX II (C) and 41 CFR §60-1.4(b) | Contractor RFP/IFB<br>Contractor RFQ<br>Subrecipients |

| THRESHOLD | PROVISION | CITATION | PROVISION APPLIES TO |
|---|---|---|---|
| | or on behalf of the contractor, state that all qualified applicants will receive consideration for employment without regard to race, color, religion, sex, sexual orientation, gender identity, or national origin.<br>(11) The contractor will not discharge or in any other manner discriminate against any employee or applicant for employment because such employee or applicant has inquired about, discussed, or disclosed the compensation of the employee or applicant or another employee or applicant. This provision shall not apply to instances in which an employee who has access to the compensation information of other employees or applicants as a part of such employee's essential job functions discloses the compensation of such other employees or applicants to individuals who do not otherwise have access to such information, unless such disclosure is in response to a formal complaint or charge, in furtherance of an investigation, proceeding, hearing, or action, including an investigation conducted by the employer, or is consistent with the contractor's legal duty to furnish information.<br>(12) The contractor will send to each labor union or representative of workers with which he has a collective bargaining agreement or other contract or understanding, a notice to be provided advising the said labor union or workers' representatives of the contractor's commitments under this section and shall post copies of the notice in conspicuous places available to employees and applicants for employment.<br>(13) The contractor will comply with all provisions of Executive Order 11246 of September 24, 1965, and of the rules, regulations, and relevant orders of the Secretary of Labor.<br>(14) The contractor will furnish all information and reports required by Executive Order 11246 of September 24, 1965, and by rules, regulations, and orders of the Secretary of Labor, or pursuant thereto, and will permit access to his books, records, and accounts by the administering agency and the Secretary of Labor for purposes of investigation to ascertain compliance with such rules, regulations, and orders.<br>(15) In the event of the contractor's noncompliance with the nondiscrimination clauses of this contract or with any of the said rules, regulations, or orders, this contract may be canceled, terminated, or suspended in whole or in part and the contractor may be declared ineligible for further Government contracts or federally assisted construction contracts in accordance with procedures authorized in Executive Order 11246 of September 24, 1965, and such other sanctions may be imposed and remedies invoked as provided in Executive Order 11246 of September 24, 1965, or by rule, regulation, or order of the Secretary of Labor, or as otherwise provided by law.<br>(16) The contractor will include the portion of the sentence immediately preceding paragraph (1) and the provisions of paragraphs (1) through (8) in every subcontract or purchase order unless exempted by rules, regulations, or orders of the Secretary of Labor issued pursuant to section 204 of Executive Order 11246 of September 24, 1965, so that such provisions will be binding upon each subcontractor or vendor. The contractor will take such action with respect to any subcontract or purchase order as the administering agency may direct as a means of enforcing such provisions, including sanctions for noncompliance:<br>Provided, however, that in the event a contractor becomes involved in, or is threatened with, litigation with a subcontractor or vendor as a result of such direction by the administering agency, the contractor may request the United States to enter into such litigation to protect the interests of the United States.<br>The [recipient] further agrees that it will be bound by the above equal opportunity clause with respect to its own employment practices when it participates in federally assisted construction work: Provided, that if the [recipient] so participating is a State or local government, the above equal opportunity clause is not applicable to any agency, instrumentality or subdivision of such government which does not participate in work on or under the contract.<br>The [recipient] agrees that it will assist and cooperate actively with the administering agency and the Secretary of Labor in obtaining the compliance of contractors and subcontractors with the equal opportunity clause and the rules, regulations, and | | |

| THRESHOLD | PROVISION | CITATION | PROVISION APPLIES TO |
|---|---|---|---|
| | relevant orders of the Secretary of Labor, that it will furnish the administering agency and the Secretary of Labor such information as they may require for the supervision of such compliance, and that it will otherwise assist the recipient agency in the discharge of the agency's primary responsibility for securing compliance.<br><br>The recipient further agrees that it will refrain from entering into any contract or contract modification subject to Executive Order 11246 of September 24, 1965, with a contractor debarred from, or who has not demonstrated eligibility for, Government contracts and federally assisted construction contracts pursuant to the Executive Order and will carry out such sanctions and penalties for violation of the equal opportunity clause as may be imposed upon contractors and subcontractors by the administering agency or the Secretary of Labor pursuant to Part II, Subpart D of the Executive Order. In addition, the [recipient] agrees that if it fails or refuses to comply with these undertakings, the administering agency may take any or all of the following actions: cancel, terminate, or suspend in whole or in part this grant (contract, loan, insurance, guarantee); refrain from extending any further assistance to the [recipient] under the program with respect to which the failure or refund occurred until satisfactory assurance of future compliance has been received from such [recipient]; and refer the case to the Department of Justice for appropriate legal proceedings. | | |
| >$10,000,000 for ARPA but State Provision Applies at any amount and/or<br><br>>$2,000 for CDBG/Braided Funds Projects<br><br>See TX Prevailing Wage Laws | Davis-Bacon Act, as amended (40 U.S.C. 3141-3148). When required by Federal program legislation, all prime construction contracts in excess of $10,000,00 awarded by Non-Federal entities must include a provision for compliance with the Davis-Bacon Act (40 U.S.C. 3141-3144, and 3146-3148) as supplemented by Department of Labor regulations (29 CFR Part 5, "Labor Standards Provisions Applicable to Contracts Covering Federally Financed and Assisted Construction"). In accordance with the statute, contractors must be required to pay wages to laborers and mechanics at a rate not less than the prevailing wages specified in a wage determination made by the Secretary of Labor. In addition, contractors must be required to pay wages not less than once a week. The Non-Federal entity must place a copy of the current prevailing wage determination issued by the Department of Labor in each solicitation. The decision to award a contract or subcontract must be conditioned upon the acceptance of the wage determination. The Non-Federal entity must report all suspected or reported violations to the Federal awarding agency.<br><br>The contracts must also include a provision for compliance with the Copeland "Anti-Kickback" Act (40 U.S.C. 3145), as supplemented by Department of Labor regulations (29 CFR Part 3, "Contractors and Subcontractors on Public Building or Public Work Financed in Whole or in Part by Loans or Grants from the United States"). The Act provides that each contractor or subrecipient must be prohibited from inducing, by any means, any person employed in the construction, completion, or repair of public work, to give up any part of the compensation to which he or she is otherwise entitled. The Non-Federal entity must report all suspected or reported violations to the Federal awarding agency. | 2 CFR 200 APPENDIX II (D) | Contractor RFP/IFB<br><br>Subrecipients |
| >$100,000 | Contract Work Hours and Safety Standards Act (40 U.S.C. 3701-3708). Where applicable, all contracts awarded by the Non-Federal entity in excess of $100,000 that involve the employment of mechanics or laborers must include a provision for compliance with 40 U.S.C. 3702 and 3704, as supplemented by Department of Labor regulations (29 CFR Part 5). Under 40 U.S.C. 3702 of the Act, each contractor must be required to compute the wages of every mechanic and laborer on the basis of a standard work week of 40 hours. Work in excess of the standard work week is permissible provided that the worker is compensated at a rate of not less than one and a half times the basic rate of pay for all hours worked in excess of 40 hours in the work week. The requirements of 40 U.S.C. 3704 are applicable to construction work and provide that no laborer or mechanic must be required to work in surroundings or under working conditions which are unsanitary, hazardous, or dangerous. These requirements do not apply to the purchases of supplies or materials or articles ordinarily available on the open market, or contracts for transportation or | 2 CFR 200 APPENDIX II (E) | Contractor RFP/IFB<br><br>Subrecipients |

| THRESHOLD | PROVISION | CITATION | PROVISION APPLIES TO |
|---|---|---|---|
| | transmission of intelligence. | | |
| None | Rights to Inventions Made Under a Contract or Agreement. If the Federal award meets the definition of "funding agreement" under 37 CFR § 401.2 (a) and the recipient or subrecipient wishes to enter into a contract with a small business firm or nonprofit organization regarding the substitution of parties, assignment or performance of experimental, developmental, or research work under that "funding agreement," the recipient or subrecipient must comply with the requirements of 37 CFR Part 401, "Rights to Inventions Made by Nonprofit Organizations and Small Business Firms Under Government Grants, Contracts and Cooperative Agreements," and any implementing regulations issued by the awarding agency. | 2 CFR 200 APPENDIX II (F) | Contractor RFP/IFB<br>Contractor RFQ<br>Subrecipients |
| >$150,000 | Clean Air Act (42 U.S.C. 7401-7671q.) and the Federal Water Pollution Control Act (33 U.S.C. 1251-1387), as amended – Contracts and subgrants of amounts in excess of $150,000 must contain a provision that requires the Non-Federal award to agree to comply with all applicable standards, orders or regulations issued pursuant to the Clean Air Act (42 U.S.C. 7401-7671q) and the Federal Water Pollution Control Act as amended (33 U.S.C. 1251-1387). Violations must be reported to the Federal awarding agency and the Regional Office of the Environmental Protection Agency (EPA). | 2 CFR 200 APPENDIX II (G) | Contractor RFP/IFB<br>Contractor RFQ<br>Subrecipients |
| >$25,000 | Debarment and Suspension (Executive Orders 12549 and 12689) – A contract award (see 2 CFR 180.220) must not be made to parties listed on the governmentwide exclusions in the System for Award Management (SAM), in accordance with the OMB guidelines at 2 CFR 180 that implement Executive Orders 12549 (3 CFR part 1986 Comp., p. 189) and 12689 (3 CFR part 1989 Comp., p. 235), "Debarment and Suspension." SAM Exclusions contains the names of parties debarred, suspended, or otherwise excluded by agencies, as well as parties declared ineligible under statutory or regulatory authority other than Executive Order 12549. | 2 CFR 200 APPENDIX II (H) | Contractor RFP/IFB<br>Contractor RFQ<br>Subrecipients<br>Vendors |
| >$100,000 | Byrd Anti-Lobbying Amendment (31 U.S.C. 1352) – Contractors that apply or bid for an award exceeding $100,000 must file the required certification. Each tier certifies to the tier above that it will not and has not used Federal appropriated funds to pay any person or organization for influencing or attempting to influence an officer or employee of any agency, a member of Congress, officer or employee of Congress, or an employee of a member of Congress in connection with obtaining any Federal contract, grant or any other award covered by 31 U.S.C. 1352. Each tier must also disclose any lobbying with Non-Federal funds that takes place in connection with obtaining any Federal award. Such disclosures are forwarded from tier to tier up to the Non-Federal award. | 2 CFR 200 APPENDIX II (I) and 24 CFR §570.303 | Contractor RFP/IFB<br>Contractor RFQ<br>Subrecipients |

| THRESHOLD | PROVISION | CITATION | PROVISION APPLIES TO |
|---|---|---|---|
| | See 2 CFR §200.323 - Procurement of Recovered Materials.<br><br>Where applicable, in the performance of contract, pursuant to 2 CFR 200.323, the contractor must comply with section 6002 of the Solid Waste Disposal Act, as amended by the Resource Conservation and Recovery Act. The requirements of Section 6002 include procuring only items designated in guidelines of the Environmental Protection Agency (EPA) at 40 CFR part 247 that contain the highest percentage of recovered materials practicable, consistent with maintaining a satisfactory level of competition, where the purchase price of the item exceeds $10,000 or the value of the quantity acquired during the preceding fiscal year exceeded $10,000; procuring solid waste management services in a manner that maximizes energy and resource recovery; and establishing an affirmative procurement program for procurement of recovered materials identified in the EPA guidelines.<br><br>To the extent that the scope of work or specifications in the contract requires the contractor to provide recovered materials the scope of work or specifications are modified to require that as follows.<br><br>ii. In the performance of this contract, the Contractor shall make maximum use of products containing recovered materials that are EPA-designated items unless the product cannot be acquired—<br>1. Competitively within a timeframe providing for compliance with the contract performance schedule;<br>2. Meeting contract performance requirements; or<br>3. At a reasonable price.<br>iv. Information about this requirement, along with the list of EPA-designated items, is available at EPA's Comprehensive Procurement Guidelines web site, https://www.epa.gov/smm/comprehensive-procurement-guideline-cpg-program.<br>v. The Contractor also agrees to comply with all other applicable requirements of Section 6002 of the "Solid Waste Disposal Act." | 2 CFR 200<br>APPENDIX II (J) | Contractor RFP/IFB<br>Contractor RFQ<br>Subrecipients |
| | See 2 CFR §200.216 - Prohibition on certain telecommunications and video surveillance services or equipment<br><br>(a) Recipients and subrecipients are prohibited from obligating or expending loan or grant funds to:<br>(1) Procure or obtain;<br>(2) Extend or renew a contract to procure or obtain; or<br>(3) Enter into a contract (or extend or renew a contract) to procure or obtain equipment, services, or systems that uses covered telecommunications equipment or services as a substantial or essential component of any system, or as critical technology as part of any system. As described in Public Law 115-232, section 889, covered telecommunications equipment is telecommunications equipment produced by Huawei Technologies Company or ZTE Corporation (or any subsidiary or affiliate of such entities).<br>(i) For the purpose of public safety, security of government facilities, physical security surveillance of critical infrastructure, and other national security purposes, video surveillance and telecommunications equipment produced by Hytera Communications Corporation, Hangzhou Hikvision Digital Technology Company, or Dahua Technology Company (or any subsidiary or affiliate of such entities).<br>(ii) Telecommunications or video surveillance services provided by such entities or using such equipment.<br>(iii) Telecommunications or video surveillance equipment or services produced or provided by an entity that the Secretary of Defense, in consultation with the Director of the National Intelligence or the Director of the Federal Bureau of Investigation, reasonably believes to be an entity owned or | 2 CFR 200<br>APPENDIX II (K) | Contractor RFP/IFB<br>Contractor RFQ<br>Subrecipients |

| THRESHOLD | PROVISION | CITATION | PROVISION APPLIES TO |
|---|---|---|---|
| | controlled by, or otherwise connected to, the government of a covered foreign country.<br>(b) In implementing the prohibition under Public Law 115-232, section 889, subsection (f), paragraph (1), heads of executive agencies administering loan, grant, or subsidy programs shall prioritize available funding and technical support to assist affected businesses, institutions and organizations as is reasonably necessary for those affected entities to transition from covered communications equipment and services, to procure replacement equipment and services, and to ensure that communications service to users and customers is sustained.<br>(c) See Public Law 115-232, section 889 for additional information.<br>(d) See also § 200.471. | | |
| | See 2 CFR §200.322 - Domestic Preferences for Procurements.<br><br>(a) As appropriate and to the extent consistent with law, the Non-Federal entity should, to the greatest extent practicable under a Federal award, provide a preference for the purchase, acquisition, or use of goods, products, or materials produced in the United States (including but not limited to iron, aluminum, steel, cement, and other manufactured products). The requirements of this section must be included in all subawards including all contracts and purchase orders for work or products under this award.<br><br>(b) For purposes of this section:<br>(1) "Produced in the United States" means, for iron and steel products, that all manufacturing processes, from the initial melting stage through the application of coatings, occurred in the United States.<br>(2) "Manufactured products" means items and construction materials composed in whole or in part of non-ferrous metals such as aluminum; plastics and polymer-based products such as polyvinyl chloride pipe; aggregates such as concrete; glass, including optical fiber; and lumber. | 2 CFR 200 APPENDIX II (L) | Contractor RFP/IFB<br>Contractor RFQ<br>Subrecipients |
| | **Additional 2 CFR 200 references & Other Regulations** | | |
| None | The Federal awarding agency must establish conflict of interest policies for Federal awards. The Non-Federal entity must disclose in writing any potential conflict of interest to the Federal awarding agency or pass-through entity in accordance with applicable Federal awarding agency policy. | 2 CFR 200.112 | Contractor RFP/IFB<br>Contractor RFQ<br>Subrecipients |
| None | Contracting with HUB, small and minority businesses, women's business enterprises, and labor surplus area firms.<br>(a) The Non-Federal entity must take all necessary affirmative steps to assure that minority businesses, women's business enterprises, and labor surplus area firms are used when possible.<br>(b) Affirmative steps must include:<br>(1) Placing qualified small and minority businesses and women's business enterprises on solicitation lists;<br>(2) Assuring that small and minority businesses, and women's business enterprises are solicited whenever they are potential sources;<br>(3) Dividing total requirements, when economically feasible, into smaller tasks or quantities to permit maximum participation by small and minority businesses, and women's business enterprises;<br>(4) Establishing delivery schedules, where the requirement permits, which | 2 CFR 200.321 | Contractor RFP/IFB<br>Contractor RFQ<br>Subrecipients |

| THRESHOLD | PROVISION | CITATION | PROVISION APPLIES TO |
|---|---|---|---|
| | encourage participation by small and minority businesses, and women's business enterprises;<br>(5) Using the services and assistance, as appropriate, of such organizations as the Small Business Administration and the Minority Business Development Agency of the Department of Commerce; and<br>(6) Requiring the prime contractor, if subcontracts are to be let, to take the affirmative steps listed in paragraphs (b)(1) through (5) of this section. | | |
| >$10,000 | An NFE (Non-Federal Entity) that is a state agency or an agency of a political subdivision of a state, and the NFE's contractors must comply with Section 6002 of the Solid Waste Disposal Act.<br>Applicable NFEs must include a contract provision requiring compliance with this requirement.<br>This includes contracts awarded by a state agency or political subdivision of a state and its contractors for certain items, as designated by the EPA, with a purchase price greater than $10,000.<br>Indian Tribal Governments and nonprofit organizations are not required to comply with this provision. Additional requirements are listed below. | 2 CFR 200.323 | Contractor RFP/IFB<br>Contractor RFQ<br>Subrecipients |
| None | Financial records, supporting documents, statistical records, and all other Non-Federal entity records pertinent to a Federal award must be retained for a period of three years from the date of submission of the final expenditure report or, for Federal awards that are renewed quarterly or annually, from the date of the submission of the quarterly or annual financial report, respectively, as reported to the Federal awarding agency or pass-through entity in the case of a subrecipient. Federal awarding agencies and pass-through entities must not impose any other record retention requirements upon Non-Federal entities. **All records related to ARPA shall be maintained for 5 years per the ARPA terms, conditions, and regulations.** The only exceptions are the following:<br>(a) If any litigation, claim, or audit is started before the expiration of the 3-year period, the records must be retained until all litigation, claims, or audit findings involving the records have been resolved and final action taken. **All records related to ARPA shall be maintained for 5 years per the ARPA terms, conditions, and regulations.**<br>(b) When the Non-Federal entity is notified in writing by the Federal awarding agency, cognizant agency for audit, oversight agency for audit, cognizant agency for indirect costs, or pass-through entity to extend the retention period.<br>(c) Records for real property and equipment acquired with Federal funds must be retained for 3 years after final disposition. All records related to ARPA shall be maintained for 5 years per the ARPA terms and conditions and regulations.<br>(d) When records are transferred to or maintained by the Federal awarding agency or pass-through entity, the 3-year retention requirement is not applicable to the Non-Federal entity All records related to ARPA shall be maintained for 5 years per the ARPA terms and conditions and regulations. **All records related to ARPA shall be maintained for 5 years per the ARPA terms, conditions, and regulations.**<br>(e) Records for program income transactions after the period of performance. In some cases, recipients must report program income after the period of performance. Where there is such a requirement, the retention period for the records pertaining to the earning of the program income starts from the end of the Non-Federal entity's fiscal year in which the program income is earned.<br>(f) Indirect cost rate proposals and cost allocations plans. This paragraph applies to the following types of documents and their supporting records: Indirect cost rate computations or proposals, cost allocation plans, and any similar accounting computations of the rate at which a particular group of costs is chargeable (such as computer usage chargeback rates or composite fringe benefit rates).<br>(1) *If submitted for negotiation.* If the proposal, plan, or other computation is | 2 CFR 200.334 | Contractor RFP/IFB<br>Contractor RFQ<br>Subrecipients<br>Vendors |

| THRESHOLD | PROVISION | CITATION | PROVISION APPLIES TO |
|---|---|---|---|
| | required to be submitted to the Federal Government (or to the pass-through entity) to form the basis for negotiation of the rate, then the 3-year retention period for its supporting records starts from the date of such submission. **All records related to ARPA shall be maintained for 5 years per the ARPA terms, conditions, and regulations.**<br>(2) *If not submitted for negotiation.* If the proposal, plan, or other computation is not required to be submitted to the Federal Government (or to the pass-through entity) for negotiation purposes, then the 3-year retention period for the proposal, plan, or computation and its supporting records starts from the end of the fiscal year (or other accounting period) covered by the proposal, plan, or other computation. **All records related to ARPA shall be maintained for 5 years per the ARPA terms, conditions, and regulations.** | | |
| None | The Federal awarding agency and the Non-Federal entity should, whenever practicable, collect, transmit, and store Federal award-related information in open and machine-readable formats rather than in closed formats or on paper in accordance with applicable legislative requirements. A machine-readable format is a format in a standard computer language (not English text) that can be read automatically by a web browser or computer system. The Federal awarding agency or pass-through entity must always provide or accept paper versions of Federal award-related information to and from the Non-Federal entity upon request. If paper copies are submitted, the Federal awarding agency or pass-through entity must not require more than an original and two copies. When original records are electronic and cannot be altered, there is no need to create and retain paper copies. When original records are paper, electronic versions may be substituted through the use of duplication or other forms of electronic media provided that they are subject to periodic quality control reviews, provide reasonable safeguards against alteration, and remain readable. | 2 CFR 200.336 | Contractor RFP/IFB<br>Contractor RFQ<br>Subrecipients |
| None | CONTRACTS WITH COMPANIES ENGAGED IN BUSINESS WITH IRAN, SUDAN, OR FOREIGN TERRORIST ORGANIZATION PROHIBITED. A governmental entity may not enter into a governmental contract with a company that is identified on a list prepared and maintained under Section 806.051, 807.051, or 2252.153. The term "foreign terrorist organization" in this paragraph has the meaning assigned to such a term in Section 2252.151(2) of the Texas Government Code. | Texas Government Code 2252.152 | Contractor RFP/IFB<br>Contractor RFQ<br>Subrecipients |
| >$100,000 | PROVISION REQUIRED IN CONTRACT.<br>(a) This section applies only to a contract that:<br>(1) is between a governmental entity and a company with 10 or more full-time employees; and<br>(2) has a value of $100,000 or more that is to be paid wholly or partly from public funds of the governmental entity.<br>(b) A governmental entity may not enter into a contract with a company for goods or services unless the contract contains a written verification from the company that it:<br>(1) does not boycott Israel; and<br>(2) will not boycott Israel during the term of the contract. | Texas Government Code 2271 | Contractor RFP/IFB<br>Contractor RFQ<br>Subrecipients<br>Vendors |
| For Critical Infrastructure Projects | PROHIBITION ON CONTRACTS WITH CERTAIN FOREIGN-OWNED COMPANIES IN CONNECTION WITH CRITICAL INFRASTRUCTURE.<br>PROHIBITED CONTRACTS.<br>(a) A governmental entity may not enter into a contract or other agreement relating to critical infrastructure in this state with a company:<br>(1) if, under the contract or other agreement, the company would be granted direct or remote access to or control of critical infrastructure in this state, excluding access specifically allowed by the governmental entity for product | Texas Government Code, Title 10, Subtitle F, Chapter 2274.0102 | Subrecipients<br>EC 6.1 Awardees |

| THRESHOLD | PROVISION | CITATION | PROVISION APPLIES TO |
|---|---|---|---|
| | warranty and support purposes; and<br>(2) if the governmental entity knows that the company is:<br>(A) owned by or the majority of stock or other ownership interest of the company is held or controlled by:<br>(i) individuals who are citizens of China, Iran, North Korea, Russia, or a designated country; or<br>(ii) a company or other entity, including a governmental entity, that is owned or controlled by citizens of or is directly controlled by the government of China, Iran, North Korea, Russia, or a designated country; or<br>(B) headquartered in China, Iran, North Korea, Russia, or a designated country.<br>(b) The prohibition described by Subsection (a) applies regardless of whether:<br>(1) the company's or its parent company's securities are publicly traded; or<br>(2) the company or its parent company is listed on a public stock exchange as:<br>(A) a Chinese, Iranian, North Korean, or Russian company; or<br>(B) a company of a designated country. | | |
| None | Mandatory standards and policies relating to energy efficiency which are contained in the state energy conservation plan issued in compliance with the Energy Policy and Conservation Act. | 42 U.S.C. 6201 | Contractor RFP/IFB<br>Subrecipients |
| None | The Firm agrees that no otherwise qualified individual with disabilities shall, solely by reason of his/her disability, be denied the benefits of, or be subjected to discrimination, including discrimination in employment, under any program or activity receiving federal financial assistance. | Section 504 of the Rehabilitation Act of 1973, as amended. | Subrecipients |
| | ARPA Terms & Conditions | | |
| ARPA Terms, Conditions, & Records | 1. Use of Funds.<br>a. Recipient understands and agrees that the funds disbursed under this award may only be used in compliance with section 603(c) of the Social Security Act (the Act), Treasury's regulations implementing that section, and guidance issued by Treasury regarding the foregoing.<br>b. Recipient will determine prior to engaging in any project using this assistance that it has the institutional, managerial, and financial capability to ensure proper planning, management, and completion of such project. | Section 9901 of the American Rescue Plan Act, Pub. L. No. 117-2;<br>Section 602(b), 603(b) and/or 603(c) as applicable | Subrecipients |
| ARPA Terms, Conditions, & Records | 2. Period of Performance. The period of performance for this award begins on the date hereof and ends on December 31, 2026. As set forth in Treasury's implementing regulations, Recipients may use award funds to cover eligible costs incurred during the period that begins on March 3, 2021, and ends on December 31, 2024. | Section 9901 of the American Rescue Plan Act, Pub. L. No. 117-2;<br>Section 602(b), 603(b) and/or 603(c) as applicable | Subrecipients |
| ARPA Terms, Conditions, & Records | 3. Reporting. Recipient agrees to comply with any reporting obligations established by Treasury as they relate to this award. | Section 9901 of the American Rescue Plan Act, Pub. L. No. 117-2;<br>Section 602(b), 603(b) and/or 603(c) as applicable | Subrecipients |

| THRESHOLD | PROVISION | CITATION | PROVISION APPLIES TO |
|---|---|---|---|
| ARPA Terms, Conditions, & Records | 4. Maintenance of and Access to Records<br>a. Recipient shall maintain records and financial documents sufficient to evidence compliance with section 603(c) of the Act, Treasury's regulations implementing that section, and guidance issued by Treasury regarding the foregoing.<br>b. The Treasury Office of Inspector General and the Government Accountability Office, or their authorized representatives, shall have the right of access to records (electronic and otherwise) of Recipient in order to conduct audits or other investigations.<br>c. Records shall be maintained by Recipient for a period of five (5) years after all funds have been expended or returned to Treasury, whichever is later. | Section 9901 of the American Rescue Plan Act, Pub. L. No. 117-2;<br>Section 602(b), 603(b) and/or 603(c) as applicable | Contractor RFP/IFB<br>Contractor RFQ<br>Subrecipients<br>Vendors |
| ARPA Terms, Conditions, & Records | 5. Pre-award Costs. Pre-award costs, as defined in 2 CFR § 200.458, may not be paid with funding from this award. | Section 9901 of the American Rescue Plan Act, Pub. L. No. 117-2;<br>Section 602(b), 603(b) and/or 603(c) as applicable | Subrecipients |
| ARPA Terms, Conditions, & Records | 6. Administrative Costs. Recipient may use funds provided under this award to cover both direct and indirect costs. | Section 9901 of the American Rescue Plan Act, Pub. L. No. 117-2;<br>Section 602(b), 603(b) and/or 603(c) as applicable | Subrecipients |
| ARPA Terms, Conditions, & Records | 7. Cost Sharing. Cost sharing or matching funds are not required to be provided by Recipient. | Section 9901 of the American Rescue Plan Act, Pub. L. No. 117-2;<br>Section 602(b), 603(b) and/or 603(c) as applicable | Subrecipients |
| ARPA Terms, Conditions, & Records | 8. Conflicts of Interest. Recipient understands and agrees it must maintain a conflict of interest policy consistent with 2 CFR § 200.318(c) and that such conflict of interest policy is applicable to each activity funded under this award. Recipient and subrecipients must disclose in writing to Treasury or the pass-through entity, as appropriate, any potential conflict of interest affecting the awarded funds in accordance with 2 CFR § 200.112. | Section 9901 of the American Rescue Plan Act, Pub. L. No. 117-2;<br>Section 602(b), 603(b) and/or 603(c) as applicable | Contractor RFP/IFB<br>Contractor RFQ<br>Subrecipients<br>Vendors |
| ARPA Terms, Conditions, & Records | 9. Compliance with Applicable Law and Regulations.<br>a. Recipient agrees to comply with the requirements of section 603 of the Act, regulations adopted by Treasury pursuant to section 603(f) of the Act, and guidance issued by Treasury regarding the foregoing. Recipient also agrees to comply with all other applicable federal statutes, regulations, and executive orders, and Recipient shall provide for such compliance by other parties in any agreements it enters into with other parties relating to this award.<br>b. Federal regulations applicable to this award include, without limitation, the following:<br>i. Uniform Administrative Requirements, Cost Principles, and Audit Requirements for Federal Awards, 2 CFR Part 200, other than such provisions as Treasury may determine are inapplicable to this Award and subject to such exceptions as may be otherwise provided by Treasury. Subpart F – Audit Requirements of the Uniform Guidance, implementing the Single Audit Act, shall apply to this award.<br>ii. Universal Identifier and System for Award Management (SAM), 2 CFR Part 25, pursuant to which the award term set forth in Appendix A to 2 CFR Part 25 is hereby incorporated by reference. | Section 9901 of the American Rescue Plan Act, Pub. L. No. 117-2;<br>Section 602(b), 603(b) and/or 603(c) as applicable | Contractor RFP/IFB<br>Contractor RFQ<br>Subrecipients<br>Vendors |

| THRESHOLD | PROVISION | CITATION | PROVISION APPLIES TO |
|---|---|---|---|
| | iii. Reporting Subaward and Executive Compensation Information, 2 CFR Part 170, pursuant to which the award term set forth in Appendix A to 2 CFR Part 170 is hereby incorporated by reference.<br>iv. OMB Guidelines to Agencies on Governmentwide Debarment and Suspension (Non-procurement), 2 CFR Part 180, including the requirement to include a term or condition in all lower tier covered transactions (contracts and subcontracts described in 2 CFR Part 180, subpart B) that the award is subject to 2 CFR Part 180 and Treasury's implementing regulation at 31 CFR Part 19.<br>v. Recipient Integrity and Performance Matters, pursuant to which the award term set forth in 2 CFR Part 200, Appendix XII to Part 200 is hereby incorporated by reference.<br>vi. Governmentwide Requirements for Drug-Free Workplace, 31 CFR Part 20. (Subrecipient Only)<br>vii. New Restrictions on Lobbying, 31 CFR Part 21.<br>viii. Uniform Relocation Assistance and Real Property Acquisitions Act of 1970 (42 U.S.C. §§ 4601-4655) and implementing regulations.<br>ix. Generally applicable federal environmental laws and regulations.<br><br>c. Statutes and regulations prohibiting discrimination applicable to this award include, without limitation, the following:<br>i. Title VI of the Civil Rights Act of 1964 (42 U.S.C. §§ 2000d et seq.) and Treasury's implementing regulations at 31 CFR Part 22, which prohibit discrimination on the basis of race, color, or national origin under programs or activities receiving federal financial assistance;<br>ii. The Fair Housing Act, Title VIII of the Civil Rights Act of 1968 (42 U.S.C. §§ 3601 et seq.), which prohibits discrimination in housing on the basis of race, color, religion, national origin, sex, familial status, or disability;<br>iii. Section 504 of the Rehabilitation Act of 1973, as amended (29 U.S.C. § 794), which prohibits discrimination on the basis of disability under any program or activity receiving federal financial assistance;<br>iv. The Age Discrimination Act of 1975, as amended (42 U.S.C. §§ 6101 et seq.), and Treasury's implementing regulations at 31 CFR Part 23, which prohibit discrimination on the basis of age in programs or activities receiving federal financial assistance; and<br>v. Title II of the Americans with Disabilities Act of 1990, as amended (42 U.S.C. §§ 12101 et seq.), which prohibits discrimination on the basis of disability under programs, activities, and services provided or made available by state and local governments or instrumentalities or agencies thereto. | | |
| ARPA Terms, Conditions, & Records | 10. Remedial Actions. In the event of Recipient's noncompliance with section 603 of the Act, other applicable laws, Treasury's implementing regulations, guidance, or any reporting or other program requirements, Treasury may impose additional conditions on the receipt of a subsequent tranche of future award funds, if any, or take other available remedies as set forth in 2 CFR § 200.339. In the case of a violation of section 603(c) of the Act regarding the use of funds, previous payments shall be subject to recoupment as provided in section 603(e) of the Act. | Section 9901 of the American Rescue Plan Act, Pub. L. No. 117-2;<br>Section 602(b), 603(b) and/or 603(c) as applicable | Subrecipients |
| ARPA Terms, Conditions, & Records | 11. Hatch Act. Recipient agrees to comply, as applicable, with requirements of the Hatch Act (5 U.S.C. §§ 1501-1508 and 7324-7328), which limit certain political activities of State or local government employees whose principal employment is in connection with an activity financed in whole or in part by this federal assistance. | Section 9901 of the American Rescue Plan Act, Pub. L. No. 117-2;<br>Section 602(b), 603(b) and/or 603(c) as applicable | Subrecipients |
| ARPA Terms, Conditions, & Records | 12. False Statements. Recipient understands that making false statements or claims in connection with this award is a violation of federal law and may result in criminal, civil, or administrative sanctions, including fines, imprisonment, civil damages and penalties, debarment from participating in federal awards or contracts, and/or any | Section 9901 of the American Rescue Plan Act, Pub. L. No. 117-2;<br>Section 602(b), | Contractor RFP/IFB<br>Contractor RFQ<br>Subrecipients<br>Vendors |

| THRESHOLD | PROVISION | CITATION | PROVISION APPLIES TO |
|---|---|---|---|
| | other remedy available by law. | 603(b) and/or 603(c) as applicable | |
| ARPA Terms, Conditions, & Records | 13. Publications. Any publications produced with funds from this award must display the following language: "This project [is being] [was] supported, in whole or in part, by federal award number [enter project FAIN] awarded to [name of Recipient] by the U.S. Department of the Treasury." | Section 9901 of the American Rescue Plan Act, Pub. L. No. 117-2; Section 602(b), 603(b) and/or 603(c) as applicable | Subrecipients |
| ARPA Terms, Conditions, & Records | 14. Debts Owed the Federal Government.<br>a. Any funds paid to Recipient (1) in excess of the amount to which Recipient is finally determined to be authorized to retain under the terms of this award; (2) that are determined by the Treasury Office of Inspector General to have been misused; or (3) that are determined by Treasury to be subject to a repayment obligation pursuant to section 603(e) of the Act and have not been repaid by Recipient shall constitute a debt to the federal government.<br>b. Any debts determined to be owed the federal government must be paid promptly by Recipient. A debt is delinquent if it has not been paid by the date specified in Treasury's initial written demand for payment, unless other satisfactory arrangements have been made or if the Recipient knowingly or improperly retains funds that are a debt as defined in paragraph 14(a). Treasury will take any actions available to it to collect such a debt. | Section 9901 of the American Rescue Plan Act, Pub. L. No. 117-2; Section 602(b), 603(b) and/or 603(c) as applicable | Subrecipients |
| ARPA Terms, Conditions, & Records | 15. Disclaimer.<br>a. The United States expressly disclaims any and all responsibility or liability to Recipient or third persons for the actions of Recipient or third persons resulting in death, bodily injury, property damages, or any other losses resulting in any way from the performance of this award or any other losses resulting in any way from the performance of this award or any contract, or subcontract under this award.<br>b. The acceptance of this award by Recipient does not in any way establish an agency relationship between the United States and Recipient. | Section 9901 of the American Rescue Plan Act, Pub. L. No. 117-2; Section 602(b), 603(b) and/or 603(c) as applicable | Subrecipients |
| ARPA Terms, Conditions, & Records | 16. Protections for Whistleblowers.<br>c. In accordance with 41 U.S.C. § 4712, Recipient may not discharge, demote, or otherwise discriminate against an employee in reprisal for disclosing to any of the list of persons or entities provided below, information that the employee reasonably believes is evidence of gross mismanagement of a federal contract or grant, a gross waste of federal funds, an abuse of authority relating to a federal contract or grant, a substantial and specific danger to public health or safety, or a violation of law, rule, or regulation related to a federal contract (including the competition for or negotiation of a contract) or grant.<br>d. The list of persons and entities referenced in the paragraph above includes the following:<br>i. A member of Congress or a representative of a committee of Congress;<br>ii. An Inspector General;<br>iii. The Government Accountability Office;<br>iv. A Treasury employee responsible for contract or grant oversight or management;<br>v. An authorized official of the Department of Justice or other law enforcement agency;<br>vi. A court or grand jury; or<br>vii. A management official or other employee of Recipient, contractor, or subcontractor who has the responsibility to investigate, discover, or address misconduct.<br>c. Recipient shall inform its employees in writing of the rights and remedies provided | Section 9901 of the American Rescue Plan Act, Pub. L. No. 117-2; Section 602(b), 603(b) and/or 603(c) as applicable | Contractor RFP/IFB<br>Contractor RFQ<br>Subrecipients<br>Vendors |

| THRESHOLD | PROVISION | CITATION | PROVISION APPLIES TO |
|---|---|---|---|
| | under this section, in the predominant native language of the workforce. | | |
| ARPA Terms, Conditions, & Records | 17. Increasing Seat Belt Use in the United States. Pursuant to Executive Order 13043, 62 FR 19217 (Apr. 18, 1997), Recipient should encourage its contractors to adopt and enforce on-the-job seat belt policies and programs for their employees when operating company-owned, rented or personally owned vehicles. | Section 9901 of the American Rescue Plan Act, Pub. L. No. 117-2; Section 602(b), 603(b) and/or 603(c) as applicable | Contractor RFP/IFB Contractor RFQ Subrecipients Vendors |
| ARPA Terms, Conditions, & Records | 18. Reducing Text Messaging While Driving. Pursuant to Executive Order 13513, 74 FR 51225 (Oct. 6, 2009), Recipient should encourage its employees, subrecipients, and contractors to adopt and enforce policies that ban text messaging while driving, and Recipient should establish workplace safety policies to decrease accidents caused by distracted drivers | Section 9901 of the American Rescue Plan Act, Pub. L. No. 117-2; Section 602(b), 603(b) and/or 603(c) as applicable | Contractor RFP/IFB Contractor RFQ Subrecipients Vendors |

## Exhibit C – Other Related Information

To be inserted

N/A

## Exhibit D – Insurance Certificate

To be inserted

TO BE FURNISHED ON RECEIPT OF ORDER

## Exhibit E – Bid, Performance, and Payment Bonds

To be inserted

TO BE FURNISHED ON RECEIPT OF ORDER

## Exhibit F – Eligibility Verification (SAM.gov)

Vendor to provide a dated printout of their active status without exclusions from SAM.gov website

SEE ATTACHED

An official website of the United States government Here's how you know

**Important Reps and Certs Update** Show Details
*Jul 18, 2024*

**Entity Validation Processing** Show Details
*Jul 16, 2024*

See All Alerts

SAM.GOV®

Home Search Data Bank Data Services Help

## Entity Workspace

Get Started

Show Workspace For
Non-Federal Entities

- Non-Federal Entities
- BioPreferred Reporting
- Service Contract Reporting

Filter By

- Keyword
- Entity
- Status
- Expiration Date
- FSD Number
- Address Update

Reset

*Results per page* *Sort by*

of 1

**R.B. EVERETT & COMPANY** Active Registration

Unique Entity ID:
WYKUXS3MAUK7

Doing Business As:
(blank)

Purpose of Registration:
All Awards

*Expiration Date*
Jun 25, 2025

CAGE/NCAGE:
3K387

Physical Address:
8211 RED BLUFF RD
PASADENA, TX 77507-1039 USA

Feedback

## Our Website

About This Site
Our Community
Release Notes
System Alerts

## Policies

Terms of Use
Privacy Policy
Restricted Data Use
Freedom of Information Act
Accessibility

## Our Partners

Acquisition.gov
USASpending.gov
Grants.gov
More Partners

## Customer Service

Help
Check Entity Status
Federal Service Desk
External Resources
Contact

## Exhibit G – Certificate of Interested Parties (Form 1295)

Form 1295 (Certificate of Interested Parties) must be completed on the Texas Ethics Commission's website as part of this project prior to contract execution. Form 1295 can be accessed here: https://www.ethics.state.tx.us/filinginfo/1295/ and must be returned with the certification number assigned after completion

TO BE FURNISHED ON RECEIPT OF ORDER

# City of La Marque

1111 Bayou Road
La Marque, Texas 77568

## REQUEST FOR PROPOSALS (RFP)
## COMPETITIVE PROCUREMENT FOR
## GENERAL SERVICES, SUPPLIES, AND/OR EQUIPMENT

This RFP is being supported

by federal award number [RCP-056096]

allocated to the

## City of La Marque

under the

## American Rescue Plan Act (ARPA)

## Coronavirus State and Local Fiscal Recovery Funds (SLFRF)

## by the U.S. Department of the Treasury

**Prepared By: Department of Public Works**

## Procurement Reference #2467

# American Rescue Plan Act (ARPA)
# Request for Proposals (RFP)

Date: October 1, 2024

Re: Request for Proposals (RFP) for Trailer Mounted Pothole Patcher with DuraPatcher Technology funded with Coronavirus State and Local Fiscal Recovery Funds (SLFRF) Allocated Under the American Rescue Plan Act (ARPA)

Dear Vendor:

The City of La Marque, hereinafter called "Entity", has received an allocation of American Rescue Plan Act (ARPA) funds, and is issuing a Request for Proposals (RFP) for a general purchases and supplies contract. The item(s) are being solicited to assist the Entity in completing and implementing programs and/or projects funded with its allocation of ARPA funds.

The Sole Point of Contact for this solicitation may provide information regarding this RFP. Refer to the **Schedule of Events and Selection Summary** in Section 1 of this document for response details.

Respondent is responsible for ensuring that their RFP response is received in a timely manner and that it contains all elements of the RFP, including all required forms and any addendums issued. Respondent should complete the Solicitation Response Cover Sheet/Acknowledgement of Addenda/Submission Checklist contained in Attachment A and all other requirements identified in the RFP. RFP responses received after the deadline will not be opened and therefore not evaluated or considered for award, regardless of whether or not the delay was outside the control of the submitting provider. The City of La Marque reserves the right to negotiate with providers submitting timely responses in accordance with state and federal procurement requirements, to reject any and all bids, and to select multiple respondents if it deems it's in the best interest of the Entity and/or desires to do so.

The Entity is an Affirmative Action/Equal Opportunity Employer. Minority Business Enterprises, Small Business Enterprises, Women Business Enterprises, and Labor Surplus Area firms are encouraged to submit bids.

**CONTENTS** **PAGE**


**AMERICAN RESCUE PLAN ACT (ARPA) REQUEST FOR PROPOSALS (RFP)** **2**

**REQUEST FOR PROPOSALS – GENERAL INFORMATION** **4**

**SECTION 1 – SCHEDULE OF EVENTS AND SELECTION SUMMARY** **4**

**SECTION 2 – INTRODUCTION AND GENERAL CONDITIONS** **6**

**SECTION 3 – SCOPE OF WORK/TECHNICAL SPECIFICATIONS** **9**

**SECTION 4 – EVALUATION CRITERIA** **12**

**SECTION 5 – RESPONSE SUBMISSION REQUIREMENTS** **14**

**LIST OF EXHIBITS** **16**

EXHIBIT A: PROJECT SCOPE OF WORK 17

EXHIBIT B: REQUIRED CONTRACT PROVISIONS 18

EXHIBIT C: OTHER RELEVANT INFORMATION/SPECIAL CONDITIONS 31

**LIST OF ATTACHMENTS A THROUGH L** **32**

ATTACHMENT A: SOLICITATION RESPONSE COVER SHEET/ACKNOWLEDGEMENT OF ADDENDA/SUBMISSION CHECKLIST 33

ATTACHMENT B: PRICING SHEET 35

ATTACHMENT C: SYSTEM FOR AWARD MANAGEMENT (SAM.GOV) RECORD SEARCH 36

ATTACHMENT D: CUSTOMER/CLIENT REFERENCES 38

ATTACHMENT E: CERTIFICATE OF INSURANCE (IF APPLICABLE) 41

ATTACHMENT F: ETHICS AND CONFLICT OF INTEREST ACKNOWLEDGEMENT 42

ATTACHMENT G: STATEMENT OF CONFLICTS OF INTEREST (IF ANY) 43

ATTACHMENT H: CONFLICT OF INTEREST QUESTIONNAIRE FORM (CIQ) 44

ATTACHMENT I: DISCLOSURE OF LOBBYING ACTIVITIES SF-LLL CERTIFICATION 46

ATTACHMENT J: TEC CERTIFICATE OF INTERESTED PARTIES (FORM 1295) 48

ATTACHMENT K: BIDDER'S CERTIFICATION 49

ATTACHMENT L: NON-COLLUSION AFFIDAVIT 50

**APPENDIX I – SAMPLE CONTRACT** **51**

## SECTION 1 – SCHEDULE OF EVENTS AND SELECTION SUMMARY

1.1 **SCHEDULE OF EVENTS – ALL DATES ARE TENTATIVE**

1.1.1 The Entity reserves the right to change dates at any time. At the sole discretion of the Entity, events listed in Section 1 are subject to scheduling changes and cancellation. The Entity will make public any changes to the stated schedule.

1.1.2 All requests, questions, or other communication about this solicitation shall be made in writing and addressed to the Entity's Sole Point of Contact listed in the **Schedule of Events + Response Requirements** that follow. Only the Sole Point of Contact may be contacted regarding required elements for this RFP.

1.1.3 **Respondent must review all documents and information in the *Exhibits* section and complete the required documents in the *Attachments* section. The completed Attachments, including the signed Pricing Sheet, must be contained within the Proposal Response and submitted to the Point of Contact listed in the Schedule of Events + Response Requirements that follow.**

### SCHEDULE OF EVENTS + RESPONSE REQUIREMENTS

| SCHEDULE OF EVENTS | |
|---|---|
| **RFP NOTICE DATE:** | October 1, 2024 |
| **VENDOR QUESTIONS DUE:** | October 15, 2024, 5:00 PM CST |
| **QUESTIONS ANSWERED BY:** | October 22, 2024, 5:00 PM CST |
| **PRE-PROPOSAL CONFERENCE:**<br><br>The Entity shall reject responses submitted by firms that do not attend the mandatory pre-proposal conference. | October 10, 2024<br>http://cityoflamarque.org/bidszoom |
| **SITE VISIT:**<br><br>The Entity shall reject responses submitted by firms that do not attend the mandatory site visit. | If needed, will be scheduled. |
| **PROPOSAL DUE DATE:** | October 31, 2024, 10:00 AM CST |
| | |
| **ESTIMATED AWARD DATE:** | November 18, 2024, 6:00 PM CST |
| **RESPONSE REQUIREMENTS** | |

| QUESTIONS & ANSWERS ONLY – SOLE POINT OF CONTACT | |
|---|---|
| The Entity will allow written questions and requests for clarification of this solicitation. Questions must be submitted by email to the Sole Point of Contact listed below. Respondents' names will be removed from questions in any responses released. | |
| **SOLE POINT OF CONTACT NAME:** | City Clerk |
| **ADDRESS:** | 1111 Bayou Road La Marque, TX 77568 |
| **EMAIL:** | bids@cityoflamarque.org |
| **PHONE:** | 409-938-9259 |
| **DELIVERY OF RESPONSE PROPOSAL – POINT OF CONTACT** | |
| **For digital delivery,** the Subject Line should include Respondent's Name, RFP number, and time/due date of RFP and completed response and all attachments uploaded to the following point of contact: | |
| **NAME:** | - |
| **TITLE:** | City Clerk |
| **DELIVERY POINT:** | Bidsubmit.cityoflamarque.org |
| | |
| **If mailed or hand-delivered,** sealed proposals (an original and 3 copies) should be submitted on the original forms provided. Each response must be sealed and should be placed in a properly identified envelope with Respondent's Name, RFP number, and time/due date of RFP. | |
| **For mail or hand-delivery,** deliver response and all attachments to: | |
| **NAME:** | - |
| **TITLE:** | City Clerk |
| **ADDRESS:** | 1111 Bayou Road LaMarque, TX 77568 |
| | |
| | |

## 1.2 SELECTION OF RESPONDENT(S)

1.2.1 The Entity intends to select Respondent(s) that best meet the needs of the Entity and that provide the best overall value. The Entity reserves the right to award multiple contracts from the finalist pool of successful Respondent(s). Respondents will be rated and ranked according to the evaluation criteria set forth below. The Entity intends to enter into negotiations with the top-ranked Respondent (i.e., the most highly qualified) and attempt to negotiate a fair and reasonable price; if negotiations fail, the Entity shall formally end negotiations with that respondent and attempt to negotiate with the next most highly qualified provider. The Entity shall proceed in like manner until it has contracted with a sufficient number of providers to respond to the identified scope of work.

1.2.2 The Entity reserves the right to check references on any projects performed by the Respondent, whether provided by the Respondent or known by the Entity.

1.2.3 The Entity is not required to accept the lowest cost proposal.

1.2.4 The Entity may make such investigation as deemed necessary to determine the ability of the Respondent to perform the work, and the Respondent shall furnish to the Entity all such information by the date specified by the Entity.

1.2.5 The Entity may conduct such investigations as it deems necessary or appropriate to assist in the evaluation of any RFP response and to establish the responsibility, qualifications, and financial ability of the Respondent, their proposed subcontractors, and other persons or organizations submitted within a Respondent's response to do the work to the Entity's satisfaction within the prescribed time.

1.2.6 The Entity reserves the right to conduct interviews of short-listed Respondent(s) prior to making a final selection.

1.2.7 The Entity reserves the right to contact references as deemed necessary to complete its analysis.

**See SECTION 4 – EVALUATION CRITERIA, for additional information on how Respondents will be evaluated and selected.**

# SECTION 2 – INTRODUCTION AND GENERAL CONDITIONS

## 2.1 GENERAL DESCRIPTION OF THE SCOPE OF WORK (SOW) – SEE *SECTION 3* AND *EXHIBIT A* FOR SOW DETAILS

The Entity has received an allocation of American Rescue Plan Act (ARPA) funds and is issuing a Request for Proposals (RFP) for a general purchases and supplies contract. The item(s) are being solicited to assist the Entity in completing and implementing programs and/or projects funded with its allocation of ARPA funds.

This solicitation includes purchase of:

2.1.1 **General Description:** Examples: Trailer Mounted Pothole Patcher with DuraPatcher Technology

2.1.2 The scope of work includes all labor, materials, goods and/or services necessary to provide the purchased items, including any installation specified in **Exhibit A**. The respondent shall submit a written copy of all warranty information prior to final acceptance by Entity.

2.1.3 **REFERENCED BRAND EXAMPLE:** Catalogs, brand names or manufacturer's references are descriptive only and indicate type and quality desired. Proposals on brands of like nature and quality will be considered. If proposing other than the referenced brands/model number, Respondent must show manufacturer, brand or trade name, product number and provide complete descriptive information of product offered and include with response. Failure to take exception to specifications or reference data will require Respondent to furnish specified brand names, numbers, etc.

**2.2 CONSIDERATION OF AWARD**

To be considered for award, Respondents must adhere to the requirements, when applicable to Vendors, as set forth in **Exhibit B**, the ARPA Required Provisions, and provide all other required information and documentation as set forth in this solicitation.

**2.3 CONTRACT AWARD**

The Entity may award a Firm Fixed Price Contract. A Respondent's proposal must be responsive to this solicitation and include all required documents as instructed in the solicitation and listed in the *Solicitation Response Cover Sheet/Acknowledgement of Addenda/Submission Checklist* **(Attachment A)**.

**2.4 TERM OF PURCHASE CONTRACT**

The Contract or Purchase Order shall be effective upon date of execution (signed by the Entity designee), shall contain terms and conditions for the purchase, including delivery date and delivery location, and shall expire upon delivery and final acceptance by the Entity. A sample contract is available for review at **Appendix I**.

**2.5 BID ACCEPTANCE**

2.5.1 Proposals must be <u>received</u>, time stamped or otherwise acknowledged before the specified hour and date. Late submittals <u>WILL NOT</u> be considered under any circumstances. The Entity will not be held responsible for any solicitation response that is mishandled prior to receipt by the Entity. The Entity will not be responsible for any technical issues that result in late delivery, inappropriately identified documents, or other submission error that may lead to disqualification (including substantive or administrative) or nonreceipt of the Respondent's response.

2.5.2 The Entity reserves the right to accept or reject any and all proposals, to accept any proposal deemed advantageous and to waive irregularity in the proposals. By submitting a response, the Respondent acknowledges and will adhere to all specifications as stated within this procurement packet.

2.5.3 Proposals CANNOT be altered or amended after the due date. Any alterations made before the due time must be initialed by Respondent or authorized agent. No response may be withdrawn after due date without approval and based on a written acceptable reason.

2.5.4 The Entity reserves the right to revise or amend the specifications prior to the due date. Such revisions or amendments, if any, will be announced by amendments or addendums to these specifications. Copies of such amendments or addendums so issued will be posted to the Entity's bidding websites. If Respondent demonstrates just reason for a change, the Entity must have at least five (5) working days' notice prior to submission due date.

2.5.5 In the event that Respondent finds discrepancies in or omissions from the specifications or other documents or be in doubt as to their meaning, Respondent should at once notify the Entity Sole Point of Contact and obtain clarification prior to submitting a response.

2.5.6 All Respondents must meet or exceed the minimum specifications to be considered a valid response. The Entity reserves the right to accept or reject all or any part of any response, waive minor technicalities and award the contract either to the lowest responsible Respondent or to the Respondent who provides goods or services at the best value for the Entity.

2.5.7 The Respondent agrees to protect the Entity from claims involving infringement of patents or copyrights.

PROPRIETARY OR CONFIDENTIAL INFORMATION; TEXAS PUBLIC INFORMATION ACT: Any proprietary, trade secret, or otherwise confidential information Respondent includes in its Proposal must be clearly labeled as proprietary or confidential information, and Respondent must identify the specific exception to disclosure in the Public Information Act (PIA). Merely making a blanket claim that the entire Proposal is protected from disclosure because it contains some proprietary information is not acceptable and shall make the entire Proposal subject to release under the PIA. Any information which is not clearly identified as proprietary or confidential shall be deemed to be subject to disclosure pursuant to the PIA.

Information, documentation, and other material in connection with this Response or any resulting Contract may be subject to public disclosure under the Texas PIA, Chapter 552 of the Texas Gov't Code.

2.5.8 There is no guarantee a contract will be awarded. The Entity reserves the right to cancel this RFP at any time.

2.5.9 All proposals become public documents and are subject to public review (upon request and as allowed by law). The submission of an RFP response will constitute representation by the Respondent that it understands and has complied with the requirements of the RFP. Submission of a response indicates the RFP information provided was sufficient in scope and detail to convey understanding of anticipated terms and conditions for performance of the work.

2.5.10 RFP Respondents assume all costs of preparation of the proposal. RFP responses become the property of the Entity.

**2.6 PROHIBITED COMMUNICATION**

On issuance of this solicitation, except for the written inquiries described in Section 2.6 above, the Entity, its representative(s), or partners will not answer any questions or otherwise discuss the contents of this solicitation with any potential respondent. This restriction does not preclude discussions between affected parties for the purposes of conducting business unrelated to this solicitation. Failure to comply with these requirements may result in disqualification of respondent's solicitation response.

**2.7 TERMINATION CONDITIONS**

See Contract at **Appendix I** for Termination Conditions.

2.7.1 **FAILURE TO ENTER INTO A CONTRACT**

Should the Selected Respondent ("Vendor"), to whom the contract is awarded, fail to enter into a contract within twenty-one (21) business days, the Entity may then, at its option, retain the Vendor's bid deposit/bond (if required) and accept the bid of the next lowest responsible bidder.

## SECTION 3 – SCOPE OF WORK/TECHNICAL SPECIFICATIONS

### 3.1 MINIMUM REQUIREMENTS

3.1.1 The selected Vendor shall have no convictions or civil judgments preceding nor thereafter this solicitation rendered against Respondent for 1) commission of fraud or a criminal offense in connection with obtaining, attempting to obtain, or performing a public (federal, state or local) transaction or contract under a public transaction; 2) violation of federal or state antitrust statutes or commission of embezzlement, theft, forgery, bribery, falsification or destruction of records, making false statements, or receiving stolen property.

3.1.2 The selected Vendor shall not ever have been indicted for or otherwise criminally or civilly charged by a government entity (federal, state, or local) with commission of any of the offenses enumerated above.

3.1.3 Where applicable, Vendor's staff must meet and maintain current certifications and or licensure requirements as mandated by state law or the appropriate licensing authority.

3.1.4 Vendor must not be debarred at the time of response submission, and prior to award of a contract. The System for Award Management (SAM.gov) and the Texas Comptroller's Debarred Vendor List will be checked to ensure the Vendor is not excluded from contract participation at the federal level. If the Vendor is debarred, the Vendor's proposal will not be evaluated.

### 3.2 SCOPE OF SERVICES Construct

3.2.1 **The required products or services shall be provided in accordance with attached Exhibits:**

- **Exhibit A:** Project Scope of Work
- **Exhibit B:** ARPA Required Provisions
- **Exhibit C:** Other Relevant Information

3.2.2 **Work Orders**

During the term of any contract awarded, the Entity may request the Vendor to perform certain tasks as described in the scope, subject to a specific work order authorization. All work authorizations shall be in writing, signed by all parties, and shall include a scope of services, a list of tasks to be performed, a time schedule, a list of deliverables and such other information or special conditions as may be necessary for the work requested.

3.2.3 **Condition of Product:** New Equipment ONLY; NO re-manufactured or "gray market" items. All items must be covered by the manufacturer's warranty. The unit(s) shall be made ready for continuous operation upon delivery. Respondent is cautioned that any unit delivered to the FOB point that does not meet specifications in every aspect will not be accepted.

3.2.4 **All Parts:** All parts not specifically mentioned which are necessary for the unit to be complete and ready for operation or which are normally furnished as standard equipment shall be furnished by the vendor. All parts shall conform in strength, quality, and workmanship to the accepted standards of the industry.

3.2.5 **Manuals:** Manuals containing illustrated parts list and operating and service instructions for the units shall be delivered with units. Manuals shall outline all necessary service and operating instructions for the units delivered and provide necessary warning and safety precautions.

3.2.6 **Warranty Requirements:** The units shall be warranted against defects in material and workmanship for a standard manufacturer's warranty and shall cover 100% parts and labor for the units. Vendor shall furnish warranty and a list of warrantied repair companies to the Entity at time of delivery. The warranty begins on the date the units are determined to meet specifications and accepted by the Entity.

**3.3 DELIVERY AND ACCEPTANCE**

3.3.1 **Freight Charges:** Shipping shall be Free on Board (FOB) destination; therefore, unit prices must include all shipping, handling, fuel surcharges, and delivery fees.

3.3.2 **Delivery Schedule:** Recommended delivery not to exceed 90 calendar days from date of award; delivery terms may be a factor in determining award. Respondent must contact the Entity point of contact to schedule delivery date and time. Respondent shall provide a minimum forty-eight (48) hours' notice prior to delivery.

**3.4 DELIVERY CONTACT(S):** Respondent shall contact the Entity for delivery a minimum of one (1) week in advance to coordinate delivery.

| | |
|---|---|
| **Delivery Contact Name:** | City Clerk |
| **Phone:** | (409) 938-9259 |
| **Email:** | bids@cityoflamarque.org |

**3.5 REGISTRATION AND TITLING (when applicable):** Permanent registration and titling will be performed by **the Entity**. **DO NOT REGISTER ITEM**. Respondent shall supply, as applicable, dealer's tag for item for sixty (60) days from date of delivery. The original Certificate of Origin (COO) or Manufacturer's Statement of Origin (MSO) as well as the most current version of TXDMV Form 130U or Application for Texas Title with signature shall be submitted with an invoice to the Entity.

**3.6 DELIVERY DELAYS:** If delay is foreseen, Respondent shall give written notice to the Entity and must keep the Entity advised of status of order at all times. Default in promised Delivery Days After Receipt of Order (ARO) without accepted reasons or failure to meet specifications authorizes the Entity to cancel contract/Purchase Order.

**3.7 COMPLIANT PRODUCTS:** Delivery does not occur until the Respondent delivers products, materials, or services in full compliance with the specifications to Entity's FOB destination, unless delivery is specifically accepted, in whole or in part, by the Entity. Providing products, materials, or services which do not meet all specification requirements does not constitute delivery. Entity reserves the right to require new delivery or a refund in the event that materials or products not meeting specifications are discovered after payment has been made. NO SUBSTITUTIONS PERMITTED WITHOUT WRITTEN APPROVAL OF THE ENTITY.

**3.8 ACCEPTANCE:** All equipment ordered will be subject to acceptance inspection and performance testing upon receipt. Acceptance inspection and performance testing will not take more than five (5) working days, weather permitting. Respondent will be notified within this time frame of any units not

delivered in full compliance with the purchase order specifications. In the event the goods tested fail to meet or exceed all conditions and requirements of the solicitation and Contract, the goods will be rejected in whole or in part, at the State's Entity's option, and returned to the Vendor or held for disposition at the Vendor's expense. Latent defects may result in cancellation of the Contract at no expense to the Entity.

## 3.9 RECORD KEEPING

3.9.1 Respondents shall provide, enter, or upload all documentation, communications, and records including all permits, certifications, warranties, and approvals regarding all provided services/ products as instructed by the Entity.

3.9.2 Respondents shall maintain records of all events that affect, or may be expected to affect the quality, scope, or progress of the services. All records shall be retained for a period of **five (5) years** following the closeout of the Entity's federal grant.

3.9.3 **Insurance**

3.9.3.1 If applicable, an original, certified copy of an Insurance Certificate listing the Entity as additional insured, must be submitted with the Respondent's submittal **(see Attachment E for requirements).** The successful Respondent will be required to maintain at all times during performance of the Contract, the insurance detailed below.

3.9.3.2 Workers' Compensation Insurance

3.9.3.3 Employers' Liability Insurance

3.9.3.4 Comprehensive General Liability Insurance

3.9.3.5 Excess Liability Insurance, Comprehensive General Liability Insurance, Comprehensive Automobile Liability Insurance

## 3.10 TERMS AND CONDITIONS

3.10.1 **Indemnity Clause** – The Respondent agrees to indemnify and save harmless the Entity and its officers, agents, and employees from any and all claims, causes or action, and damages of every kind, for injury to or death of any person and damages, to property arising out of or in connection with the work done by Respondent under this contract, and including acts or omissions of the Entity or its officers, agents, or employees in connection with said contract.

3.10.2 **Equal Opportunity Employer** – The successful Respondent shall warrant and agree that he/she is an Equal Opportunity Employer. Should complaints of any form of discrimination, either in dispensation of the service, or within company hiring policies be substantiated, this contract may be terminated immediately.

3.10.3 **Assignment** – The successful Respondent may not assign, sell, or otherwise transfer this contract without prior written consent of the Entity.

3.10.4 **Compliance with Laws** – The Respondent agrees to comply with the requirements of Section 603 of the Act, regulations adopted by Treasury pursuant to Section 603(f) of the Act, and guidance issued by Treasury regarding the foregoing.

3.10.4.1 Additionally, all applicable local government codes for the State of Texas also apply to this contract. All equipment, supplies and work furnished under this contract shall comply with applicable laws, ordinances, and regulations. Respondent shall obtain and pay for such

permits and inspections as are required for the legal performance of this work, unless otherwise specified. Respondent shall comply with all federal and state laws and Entity's ordinances and codes applicable to the Respondent's operation under this contract. These specifications and the contract resulting here shall be fully governed by the laws of the State of Texas and shall be fully performable in Galveston County, Texas, where venue for any proceeding arising hereunder will lie.

3.10.5 **Silence of Specifications** – The apparent silence of specifications as to any detail, or the apparent omission from it or a detailed description concerning any point, shall be regarded as meaning that only the best commercial practice is to prevail and that only material and workmanship of the finest quality shall be used. All interpretations of specifications shall be made on the basis of this statement. The Respondent should request clarification from the Entity as specified in this document.

## SECTION 4 – EVALUATION CRITERIA

**4.1 RESPONSIVENESS OF QUALIFICATIONS SUBMISSION: Pass/Fail**

Qualifications submission shall be responsive to all material requirements that shall enable the evaluation committee to evaluate responses in accordance with the evaluation criteria to make a recommendation to Officials of the Entity.

**4.2 FINANCIAL STABILITY OF RESPONDENT: Pass/Fail**

Financial stability of the Respondent to successfully undertake the project and the ability to ensure performance over the duration of the contract.

**4.3 TECHNICAL REQUIREMENTS: 100 Points Total**

Extent to which the provided service or products meets the needs of the Entity, including, but not limited to, the criteria in the evaluation matrix and in the submission requirements section and as expressed in this document.

**4.4 EVALUATION CRITERIA:**

**Solicitation responses shall be evaluated in accordance with Part 200 of the Uniform Administrative Requirements, Cost Principles, and Audit Requirements. The Entity will make the selection on the basis of demonstrated competence and qualifications; and to a Respondent that provides a fair and reasonable price.**

The Entity evaluates the responses, prepares a Bid Tabulation sheet, determines the award on the basis of fair and reasonable pricing considered to be the Best Value to the Entity.

Only responses submitted in compliance with the **Schedule of Events + Response Requirements** section and meeting qualifications will be considered. Failure to submit the required information may be cause for rejection of the bid response. The Entity reserves the right to waive informalities and minor irregularities in bids received.

**Initial Compliance Screening**
The Entity will perform an initial screening of all solicitation responses received. Unsigned solicitation responses, and solicitation responses that do not meet the minimum qualifications above and/or do not include all required forms and information may be subject to rejection without further evaluation.

**Additional Evaluation Criteria**
All solicitations will be evaluated based on Responsiveness and Price. Responsiveness means adhering to the Terms and Conditions and specifications of the supplies requested. See additional evaluation criteria under Exhibit A.

***Evaluation Process:*** *The Entity's Evaluator(s) completes an evaluation of the submitted proposal using the criteria described below.* ***The proposal submitted must be a firm-fixed price.***

**EVALUATION CRITERIA**

| EVALUATION CRITERIA | SCORE |
|---|---|
| Responsiveness of Proposal | Pass/Fail |
| Financial Stability | Pass/Fail |
| Understanding of Work; Experience and Qualifications | 20 |
| Capacity to Perform, Delivery/Service Schedule, and References | 20 |
| Pricing | 60 |
| **TOTAL SCORE** | **100** |

## SECTION 5 – RESPONSE SUBMISSION REQUIREMENTS

This section details the requirements for submitting all required information. Respondents are advised to see **Schedule of Events + Response Requirements** on Page 4 of this document, and to carefully review all the requirements and submit all documents and information as indicated in this RFP. Additional information may be requested for clarification. Incomplete responses may lead to a submission being deemed nonresponsive and will not be considered.

To ensure some degree of uniformity in the submission, please follow the outline listed below.

### 5.1 STATEMENT OF INTEREST

The statement of interest should be limited to a maximum of two (2) pages and must include a brief introduction of the company, a statement of the Respondent's understanding of the work to be performed and that the company meets and will comply with the requirements set forth in this document.

### 5.2 EXPERIENCE AND RELEVANT QUALIFICATIONS

Respondent shall demonstrate related professional qualifications, experience, and knowledge similar to this scope of work. Response should include information similar in scope and size to the scope of work in this RFP. Limit to four (4) pages. Minimum submission shall address the following:

5.2.1 **Experience** – Respondents shall provide a concise narrative description of their firm's experience in services similar in size and scope to the requested scope of services. Describe any work performed in or for the Entity. Respondents shall provide descriptions of at least three (3) projects of similar size and scope to this Program. Projects should include project location, duration and project description and scope of work the Respondent performed.

5.2.2 **Relevant Qualifications** – Respondents must provide a brief summary to include total number and types of employees, skills, knowledge and abilities, company background history, and number of years in providing similar services as outlined in this document.

### 5.3 CAPACITY TO PERFORM

Respondent should state its firm commitment to provide goods or services within the prescribed delivery date and time.

5.3.1 **Work Capacity:** Respondent shall provide information to demonstrate capacity to perform requested work. Respondents shall provide a detailed typical schedule to show sequence of key work activities and the number of days to complete each task.

5.3.4 If applicable, **Bonding Capacity:** Respondent(s) shall provide proof of bonding capacity in a statement addressed to the Entity from a certified bonding company authorized to do business in the State of Texas. The letter must clearly state the amount of Firm's bonding capacity to be reserved for the Entity's projects. Firm shall carry a minimum bonding capacity of the project value upon execution of the Contract. The bond(s) must be made payable to the Entity. In your response, please provide a statement regarding your ability to provide proof of bonding as directed in the Exhibits that follow.

**5.4 FINANCIAL STABILITY**

Respondent shall provide a statement that includes the following:

5.4.1 A full disclosure of any events, liabilities, or contingent liabilities that could affect Respondent's financial ability to perform this contract; and

5.4.2 Other financial information sufficient for the Entity, in its sole judgement, to determine if Respondent is financially solvent or adequately capitalized.

**5.5 LEGAL ACTIONS**

Provide a list of all pending litigation and include a brief description of the reason for legal action (if applicable).

**5.6 PRICING**

5.6.1 Respondents shall complete and submit the Pricing Sheet (see **Attachment B**).

5.6.2 Prices for all goods and/or services shall be all inclusive. Pricing offered shall be valid for ninety (90) days from response due date.

5.6.3 The City of La Marque is exempt from taxes. DO NOT INCLUDE TAX IN YOUR PRICING SUBMITTAL.

5.6.4 Estimated Quantities – Quantities indicated are estimated based upon the best available information. The Entity reserves the right to increase or decrease the quantities by any amount deemed necessary to meet its needs without any adjustments in the bid price.

See additional pricing criteria under Exhibit A, Options

# LIST OF EXHIBITS

EXHIBIT A PROJECT SCOPE OF WORK

EXHIBIT B REQUIRED CONTRACT PROVISIONS

EXHIBIT C OTHER RELEVANT INFORMATION/SPECIAL CONDITIONS

# EXHIBIT A – PROJECT SCOPE OF WORK

To be provided by the Entity

| Item | Description | | Quantity | Unit of Measure |
|---|---|---|---|---|
| 1 | Trailer Mounted Pothole Patcher with DuraPatcher Technology | | 1 | See Below |
| 2 | | | | |
| 3 | | | | |
| 4 | | | | |
| 5 | **DELIVERY LOCATION: Provide the Delivery Location** | 1500 Municipal Drive, La Marque, Texas 77568 | | |
| 6 | **DELIVERY SCHEDULE: Provide the number of calendar days required for delivery after receipt of the order** | 90 days | | |

**Basic Specifications for a Spray Injection Patching Truck:**

**Purpose:**
These specifications shall be construed as the minimum acceptable standards for a trailer mounted pothole patcher using a tow vehicle with aggregate supply. Should the manufacturer's current published data or specifications exceed these standards, the manufacturer's standards shall be considered minimum and shall be furnished. All integral parts not specifically mentioned in the scope of these specifications that are necessary to provide a complete working unit shall be furnished. Additionally, the machine for bid offered shall include all standard manufacturer's equipment. The one-man pothole patcher must be a new current production model and shall meet all EPA applicable standards at the time of manufacture.

The use of specific names and numbers in the specification is not intended to restrict the bidder or any seller or manufacturer, but is intended solely for the purpose of indicating the type, size and quality of equipment considered best adapted to the uses of city participating in this bid.

**Bidder Price:**
The bid price shall include all destination charges, delivery charges, title fees, rebates, and all other applicable costs and refunds.

**MANUALS**
Each unit will be provided with one (1) copy of the operator's manuals, one (1) copy of the current parts manuals and (1) copy of the repair manual. Units will not be accepted for delivery until the manuals as outlined above are received by the purchaser.

**Warranty:**
Units purchased under this specification shall be warranted against defects in materials and workmanship for a period of not less than one year from date of delivery to customer. Items thought to be defective will be returned to factory prepaid to be repaired or replaced. The manufacturer shall warranty the equipment for a period of one year. Engine must be covered for Major Components for a period of 2 years or 2000 hours. Bidder warranty policy must be included with bid submittal

**Basic Minimum Requirements:**
The trailer-mounted machine shall be designed and constructed to repair larger cracks, potholes, and broad areas. The machine shall be capable of blowing water, dust or debris from the pothole or surface to be repaired. The machine must be capable of patching while moving forward or reverse, must be capable of patching at temperatures as low as 5 degrees F. The machine must be capable of performing each of the following functions:

| | Yes | No |
|---|---|---|
| Clean cracks and surfaces | | |
| Spray liquid asphalt emulsion over area to provide a tack coat | | |
| Apply emulsion-coated aggregate to provide high-density patch | | |
| Cover repaired area with dry aggregate | | |
| Overnight electric heating for maintaining emulsion temperature | | |

| **Dimensions:** | Yes | No |
|---|---|---|
| Width and height to meet State and Federal requirements without requiring oversize permits. | | |
| Air is used to feed and propel aggregate and emulsion to the nozzle at up to 135 lbs. per minute. No moving parts are involved in the spray injection process. | | |
| Aggregate feed system can pass up to 2-1/2 inch rock and is regulated by engine rpm providing infinite adjustment for job-site conditions. | | |
| Boom system is ergonomically designed for easy, natural movement without fatigue. | | |
| Self-cleaning Vent-Flo nozzle can patch close to traffic without overspray. | | |

| **Specifications:** | Yes | No |
|---|---|---|
| 135 lbs./min, 1⁄4-1/2-inch wet or dry aggregate | | |

| **Blower:** | Yes | No |
|---|---|---|
| Integrated 6 yd. rectangular in shape with 9ft x 7ft. opening | | |
| Direct driven from engine flywheel | | |
| 10 psi relief valve | | |

| **Compressor:** | Yes | No |
|---|---|---|
| 15 cfm direct driven | | |
| Governed from 70-95 psi | | |

| **Tanks:** | Yes | No |
|---|---|---|
| Emulsion - 250 gallons, 200 psi working pressure R-15 insulation | | |
| Two 1500-watt heat blankets with thermostats | | |
| Clean-Out - 15-gallon, 200 psi working pressure | | |
| Engine Fuel - 18 gallons | | |

| **Swing Hose Carrier:** | Yes | No |
|---|---|---|
| Trifold No Fatigue Design. | | |

| **Operator Controls:** | Yes | No |
|---|---|---|
| Emulsion and rock flow, engine rpm, horn. | | |

| **Frame:** | Yes | No |
|---|---|---|
| Emulsion and rock flow, engine rpm, horn. | | |

| **Miscellaneous:** | Yes | No |
|---|---|---|
| Dual axle, leaf spring (12,000 lb.). | | |
| (4) 225/75R15 Load “D” tires. | | |
| Electric brakes. | | |
| Tail, brake, directional, strobe and arrow-board lights. | | |
| 96” wide x 194” long x 91” high. | | |
| Weight – 5,380 lbs dry. | | |

| **Safety Decals:** | Yes | No |
|---|---|---|
| Unit shall be equipped with required safety decals and signage | | |

| **Aggregate Delivery Hose:** | **Yes** | **No** |
|---|---|---|
| 2" inside diameter, rubber-lined, abrasion resistant, non-kinking hose outfitted with spiral wire reinforcement. To minimize wear points, at no point will there be bends in the delivery hose with a radius of less than 18". | | |

**Options:**
**Bid must include the cost for each of the following options, itemized separately on the bid**

| | **Yes** | **No** |
|---|---|---|
| Crack Sealing Wand and associated hardware installed and ready to use. | | |

**This project is being supported, in whole or in part, by the U.S. Department of the Treasury, in utilizing the U.S. Department of the Treasury Coronavirus State and Local Fiscal Recovery Funds (ARPA) program and is subject to all applicable Federal and State laws and regulations.**

# EXHIBIT B – ARPA REQUIRED PROVISIONS

CFR 200.327 Contract provisions. The Non-Federal entity's contracts should contain applicable provisions described in Appendix II to Part 200—Contract Provisions for Non-Federal Entity Contracts Under Federal Awards. The Non-Federal entity's contracts must contain the provisions described in Appendix II to Part 200—Contract Provisions for Non-Federal Entity Contracts Under Federal Awards, as applicable.

| THRESHOLD | PROVISION | CITATION | PROVISION APPLIES TO |
|---|---|---|---|
| | **2 CFR 200 Appendix II (A-L)** | | |
| >$250,000 (Simplified Acquisition Threshold) | Contracts for more than the simplified acquisition threshold, which is the inflation adjusted amount determined by the Civilian Agency Acquisition Council and the Defense Acquisition Regulations Council (Councils) as authorized by 41 U.S.C. 1908, must address administrative, contractual, or legal remedies in instances where contractors violate or breach contract terms, and provide for such sanctions and penalties as appropriate. | 2 CFR 200<br>APPENDIX II (A) | Contractor RFP/IFB<br>Contractor RFQ<br>Subrecipients |
| >$10,000 | All contracts in excess of $10,000 must address termination for cause and for convenience by the Non-Federal entity including the manner by which it will be affected and the basis for settlement. | 2 CFR 200<br>APPENDIX II (B) | Contractor RFP/IFB<br>Contractor RFQ<br>Subrecipients |
| None | Equal Employment Opportunity. Except as otherwise provided under 41 CFR Part 60, all contracts that meet the definition of "federally assisted construction contract" in 41 CFR Part 60-1.3 must include the equal opportunity clause provided under 41 CFR 60-1.4(b), in accordance with Executive Order 11246, "Equal Employment Opportunity" (30 FR 12319, 12935, 3 CFR Part, 1964-1965 Comp., p. 339), as amended by Executive Order 11375, "Amending Executive Order 11246 Relating to Equal Employment Opportunity," and implementing regulations at 41 CFR part 60, "Office of Federal Contract Compliance Programs, Equal Employment Opportunity, Department of Labor."<br>41 CFR 60-1.4 Equal opportunity clause.<br>(b) Federally assisted construction contracts. (1) Except as otherwise provided, each administering agency shall require the inclusion of the following language as a condition of any grant, contract, loan, insurance, or guarantee involving federally assisted construction which is not exempt from the requirements of the equal opportunity clause:<br>The [recipient] hereby agrees that it will incorporate or cause to be incorporated into any contract for construction work, or modification thereof, as defined in the regulations of the Secretary of Labor at 41 CFR Chapter 60, which is paid for in whole or in part with funds obtained from the Federal Government or borrowed on the credit of the Federal Government pursuant to a grant, contract, loan, insurance, or guarantee, or undertaken pursuant to any Federal program involving such grant, contract, loan, insurance, or guarantee, the following equal opportunity clause:<br>During the performance of this contract, the contractor agrees as follows:<br>(1) The contractor will not discriminate against any employee or applicant for employment because of race, color, religion, sex, sexual orientation, gender identity, or national origin. The contractor will take affirmative action to ensure that applicants are employed, and that employees are treated during employment without regard to their race, color, religion, sex, sexual orientation, gender identity, or national origin. Such action shall include, but not be limited to the following:<br>Employment, upgrading, demotion, or transfer; recruitment or recruitment advertising; layoff or termination; rates of pay or other forms of compensation; and selection for training, including apprenticeship. The contractor agrees to post in | 2 CFR 200<br>APPENDIX II (C)<br>and<br>41 CFR §60-1.4(b) | Contractor RFP/IFB<br>Contractor RFQ<br>Subrecipients |

| THRESHOLD | PROVISION | CITATION | PROVISION APPLIES TO |
|---|---|---|---|
| | conspicuous places, available to employees and applicants for employment, notices to be provided setting forth the provisions of this nondiscrimination clause.<br>(2) The contractor will, in all solicitations or advertisements for employees placed by or on behalf of the contractor, state that all qualified applicants will receive consideration for employment without regard to race, color, religion, sex, sexual orientation, gender identity, or national origin.<br>(3) The contractor will not discharge or in any other manner discriminate against any employee or applicant for employment because such employee or applicant has inquired about, discussed, or disclosed the compensation of the employee or applicant or another employee or applicant. This provision shall not apply to instances in which an employee who has access to the compensation information of other employees or applicants as a part of such employee's essential job functions discloses the compensation of such other employees or applicants to individuals who do not otherwise have access to such information, unless such disclosure is in response to a formal complaint or charge, in furtherance of an investigation, proceeding, hearing, or action, including an investigation conducted by the employer, or is consistent with the contractor's legal duty to furnish information.<br>(4) The contractor will send to each labor union or representative of workers with which he has a collective bargaining agreement or other contract or understanding, a notice to be provided advising the said labor union or workers' representatives of the contractor's commitments under this section and shall post copies of the notice in conspicuous places available to employees and applicants for employment.<br>(5) The contractor will comply with all provisions of Executive Order 11246 of September 24, 1965, and of the rules, regulations, and relevant orders of the Secretary of Labor.<br>(6) The contractor will furnish all information and reports required by Executive Order 11246 of September 24, 1965, and by rules, regulations, and orders of the Secretary of Labor, or pursuant thereto, and will permit access to his books, records, and accounts by the administering agency and the Secretary of Labor for purposes of investigation to ascertain compliance with such rules, regulations, and orders.<br>(7) In the event of the contractor's noncompliance with the nondiscrimination clauses of this contract or with any of the said rules, regulations, or orders, this contract may be canceled, terminated, or suspended in whole or in part and the contractor may be declared ineligible for further Government contracts or federally assisted construction contracts in accordance with procedures authorized in Executive Order 11246 of September 24, 1965, and such other sanctions may be imposed and remedies invoked as provided in Executive Order 11246 of September 24, 1965, or by rule, regulation, or order of the Secretary of Labor, or as otherwise provided by law.<br>(8) The contractor will include the portion of the sentence immediately preceding paragraph (1) and the provisions of paragraphs (1) through (8) in every subcontract or purchase order unless exempted by rules, regulations, or orders of the Secretary of Labor issued pursuant to section 204 of Executive Order 11246 of September 24, 1965, so that such provisions will be binding upon each subcontractor or vendor. The contractor will take such action with respect to any subcontract or purchase order as the administering agency may direct as a means of enforcing such provisions, including sanctions for noncompliance:<br>Provided, however, that in the event a contractor becomes involved in, or is threatened with, litigation with a subcontractor or vendor as a result of such direction by the administering agency, the contractor may request the United States to enter into such litigation to protect the interests of the United States.<br>The [recipient] further agrees that it will be bound by the above equal opportunity clause with respect to its own employment practices when it participates in federally assisted construction work: Provided, that if the [recipient] so participating is a State or local government, the above equal opportunity clause is not applicable to any agency, instrumentality or subdivision of such government which does not participate in work on or under the contract. | | |

| THRESHOLD | PROVISION | CITATION | PROVISION APPLIES TO |
|---|---|---|---|
| | The [recipient] agrees that it will assist and cooperate actively with the administering agency and the Secretary of Labor in obtaining the compliance of contractors and subcontractors with the equal opportunity clause and the rules, regulations, and relevant orders of the Secretary of Labor, that it will furnish the administering agency and the Secretary of Labor such information as they may require for the supervision of such compliance, and that it will otherwise assist the recipient agency in the discharge of the agency's primary responsibility for securing compliance.<br><br>The recipient further agrees that it will refrain from entering into any contract or contract modification subject to Executive Order 11246 of September 24, 1965, with a contractor debarred from, or who has not demonstrated eligibility for, Government contracts and federally assisted construction contracts pursuant to the Executive Order and will carry out such sanctions and penalties for violation of the equal opportunity clause as may be imposed upon contractors and subcontractors by the administering agency or the Secretary of Labor pursuant to Part II, Subpart D of the Executive Order. In addition, the [recipient] agrees that if it fails or refuses to comply with these undertakings, the administering agency may take any or all of the following actions: cancel, terminate, or suspend in whole or in part this grant (contract, loan, insurance, guarantee); refrain from extending any further assistance to the [recipient] under the program with respect to which the failure or refund occurred until satisfactory assurance of future compliance has been received from such [recipient]; and refer the case to the Department of Justice for appropriate legal proceedings. | | |
| >$10,000,000 for ARPA but State Provision Applies at any amount and/or<br><br>>$2,000 for CDBG/Braided Funds Projects<br><br>See TX Prevailing Wage Laws | Davis-Bacon Act, as amended (40 U.S.C. 3141-3148). When required by Federal program legislation, all prime construction contracts in excess of $10,000,00 awarded by Non-Federal entities must include a provision for compliance with the Davis-Bacon Act (40 U.S.C. 3141-3144, and 3146-3148) as supplemented by Department of Labor regulations (29 CFR Part 5, "Labor Standards Provisions Applicable to Contracts Covering Federally Financed and Assisted Construction"). In accordance with the statute, contractors must be required to pay wages to laborers and mechanics at a rate not less than the prevailing wages specified in a wage determination made by the Secretary of Labor. In addition, contractors must be required to pay wages not less than once a week. The Non-Federal entity must place a copy of the current prevailing wage determination issued by the Department of Labor in each solicitation. The decision to award a contract or subcontract must be conditioned upon the acceptance of the wage determination. The Non-Federal entity must report all suspected or reported violations to the Federal awarding agency.<br><br>The contracts must also include a provision for compliance with the Copeland "Anti-Kickback" Act (40 U.S.C. 3145), as supplemented by Department of Labor regulations (29 CFR Part 3, "Contractors and Subcontractors on Public Building or Public Work Financed in Whole or in Part by Loans or Grants from the United States"). The Act provides that each contractor or subrecipient must be prohibited from inducing, by any means, any person employed in the construction, completion, or repair of public work, to give up any part of the compensation to which he or she is otherwise entitled. The Non-Federal entity must report all suspected or reported violations to the Federal awarding agency. | 2 CFR 200 APPENDIX II (D) | Contractor RFP/IFB<br><br>Subrecipients |
| >$100,000 | Contract Work Hours and Safety Standards Act (40 U.S.C. 3701-3708). Where applicable, all contracts awarded by the Non-Federal entity in excess of $100,000 that involve the employment of mechanics or laborers must include a provision for compliance with 40 U.S.C. 3702 and 3704, as supplemented by Department of Labor regulations (29 CFR Part 5). Under 40 U.S.C. 3702 of the Act, each contractor must be required to compute the wages of every mechanic and laborer on the basis of a standard work week of 40 hours. Work in excess of the standard work week is permissible provided that the worker is compensated at a rate of not less than one and a half times the basic rate of pay for all hours worked in excess of 40 hours in the work week. The requirements of 40 U.S.C. 3704 are applicable to construction work and provide that no laborer or mechanic must be required to work in surroundings | 2 CFR 200 APPENDIX II (E) | Contractor RFP/IFB<br><br>Subrecipients |

| THRESHOLD | PROVISION | CITATION | PROVISION APPLIES TO |
|---|---|---|---|
| | or under working conditions which are unsanitary, hazardous, or dangerous. These requirements do not apply to the purchases of supplies or materials or articles ordinarily available on the open market, or contracts for transportation or transmission of intelligence. | | |
| None | Rights to Inventions Made Under a Contract or Agreement. If the Federal award meets the definition of "funding agreement" under 37 CFR § 401.2 (a) and the recipient or subrecipient wishes to enter into a contract with a small business firm or nonprofit organization regarding the substitution of parties, assignment or performance of experimental, developmental, or research work under that "funding agreement," the recipient or subrecipient must comply with the requirements of 37 CFR Part 401, "Rights to Inventions Made by Nonprofit Organizations and Small Business Firms Under Government Grants, Contracts and Cooperative Agreements," and any implementing regulations issued by the awarding agency. | 2 CFR 200 APPENDIX II (F) | Contractor RFP/IFB<br>Contractor RFQ<br>Subrecipients |
| >$150,000 | Clean Air Act (42 U.S.C. 7401-7671q.) and the Federal Water Pollution Control Act (33 U.S.C. 1251-1387), as amended – Contracts and subgrants of amounts in excess of $150,000 must contain a provision that requires the Non-Federal award to agree to comply with all applicable standards, orders or regulations issued pursuant to the Clean Air Act (42 U.S.C. 7401-7671q) and the Federal Water Pollution Control Act as amended (33 U.S.C. 1251-1387). Violations must be reported to the Federal awarding agency and the Regional Office of the Environmental Protection Agency (EPA). | 2 CFR 200 APPENDIX II (G) | Contractor RFP/IFB<br>Contractor RFQ<br>Subrecipients |
| >$25,000 | Debarment and Suspension (Executive Orders 12549 and 12689) – A contract award (see 2 CFR 180.220) must not be made to parties listed on the governmentwide exclusions in the System for Award Management (SAM), in accordance with the OMB guidelines at 2 CFR 180 that implement Executive Orders 12549 (3 CFR part 1986 Comp., p. 189) and 12689 (3 CFR part 1989 Comp., p. 235), "Debarment and Suspension." SAM Exclusions contains the names of parties debarred, suspended, or otherwise excluded by agencies, as well as parties declared ineligible under statutory or regulatory authority other than Executive Order 12549. | 2 CFR 200 APPENDIX II (H) | Contractor RFP/IFB<br>Contractor RFQ<br>Subrecipients<br>Vendors |
| >$100,000 | Byrd Anti-Lobbying Amendment (31 U.S.C. 1352) – Contractors that apply or bid for an award exceeding $100,000 must file the required certification. Each tier certifies to the tier above that it will not and has not used Federal appropriated funds to pay any person or organization for influencing or attempting to influence an officer or employee of any agency, a member of Congress, officer or employee of Congress, or an employee of a member of Congress in connection with obtaining any Federal contract, grant or any other award covered by 31 U.S.C. 1352. Each tier must also disclose any lobbying with Non-Federal funds that takes place in connection with obtaining any Federal award. Such disclosures are forwarded from tier to tier up to the Non-Federal award. | 2 CFR 200 APPENDIX II (I) and 24 CFR §570.303 | Contractor RFP/IFB<br>Contractor RFQ<br>Subrecipients |

| THRESHOLD | PROVISION | CITATION | PROVISION APPLIES TO |
|---|---|---|---|
| | See 2 CFR §200.323 - Procurement of Recovered Materials.<br><br>Where applicable, in the performance of contract, pursuant to 2 CFR 200.323, the contractor must comply with section 6002 of the Solid Waste Disposal Act, as amended by the Resource Conservation and Recovery Act. The requirements of Section 6002 include procuring only items designated in guidelines of the Environmental Protection Agency (EPA) at 40 CFR part 247 that contain the highest percentage of recovered materials practicable, consistent with maintaining a satisfactory level of competition, where the purchase price of the item exceeds $10,000 or the value of the quantity acquired during the preceding fiscal year exceeded $10,000; procuring solid waste management services in a manner that maximizes energy and resource recovery; and establishing an affirmative procurement program for procurement of recovered materials identified in the EPA guidelines.<br><br>To the extent that the scope of work or specifications in the contract requires the contractor to provide recovered materials the scope of work or specifications are modified to require that as follows.<br><br>i. In the performance of this contract, the Contractor shall make maximum use of products containing recovered materials that are EPA-designated items unless the product cannot be acquired—<br>1. Competitively within a timeframe providing for compliance with the contract performance schedule;<br>2. Meeting contract performance requirements; or<br>3. At a reasonable price.<br>ii. Information about this requirement, along with the list of EPA-designated items, is available at EPA's Comprehensive Procurement Guidelines web site, https://www.epa.gov/smm/comprehensive-procurement-guideline-cpg-program.<br>iii. The Contractor also agrees to comply with all other applicable requirements of Section 6002 of the "Solid Waste Disposal Act." | 2 CFR 200<br>APPENDIX II (J) | Contractor RFP/IFB<br>Contractor RFQ<br>Subrecipients |
| | See 2 CFR §200.216 - Prohibition on certain telecommunications and video surveillance services or equipment<br><br>(a) Recipients and subrecipients are prohibited from obligating or expending loan or grant funds to:<br>(1) Procure or obtain;<br>(2) Extend or renew a contract to procure or obtain; or<br>(3) Enter into a contract (or extend or renew a contract) to procure or obtain equipment, services, or systems that uses covered telecommunications equipment or services as a substantial or essential component of any system, or as critical technology as part of any system. As described in Public Law 115-232, section 889, covered telecommunications equipment is telecommunications equipment produced by Huawei Technologies Company or ZTE Corporation (or any subsidiary or affiliate of such entities).<br>(i) For the purpose of public safety, security of government facilities, physical security surveillance of critical infrastructure, and other national security purposes, video surveillance and telecommunications equipment produced by Hytera Communications Corporation, Hangzhou Hikvision Digital Technology Company, or Dahua Technology Company (or any subsidiary or affiliate of such entities).<br>(ii) Telecommunications or video surveillance services provided by such entities or using such equipment.<br>(iii) Telecommunications or video surveillance equipment or services produced or provided by an entity that the Secretary of Defense, in consultation with the Director of the National Intelligence or the Director of the Federal Bureau of Investigation, reasonably believes to be an entity | 2 CFR 200<br>APPENDIX II (K) | Contractor RFP/IFB<br>Contractor RFQ<br>Subrecipients |

| THRESHOLD | PROVISION | CITATION | PROVISION APPLIES TO |
|---|---|---|---|
| | owned or controlled by, or otherwise connected to, the government of a covered foreign country.<br>(b) In implementing the prohibition under Public Law 115-232, section 889, subsection (f), paragraph (1), heads of executive agencies administering loan, grant, or subsidy programs shall prioritize available funding and technical support to assist affected businesses, institutions and organizations as is reasonably necessary for those affected entities to transition from covered communications equipment and services, to procure replacement equipment and services, and to ensure that communications service to users and customers is sustained.<br>(c) See Public Law 115-232, section 889 for additional information.<br>(d) See also § 200.471. | | |
| | See 2 CFR §200.322 - Domestic Preferences for Procurements.<br><br>(a) As appropriate and to the extent consistent with law, the Non-Federal entity should, to the greatest extent practicable under a Federal award, provide a preference for the purchase, acquisition, or use of goods, products, or materials produced in the United States (including but not limited to iron, aluminum, steel, cement, and other manufactured products). The requirements of this section must be included in all subawards including all contracts and purchase orders for work or products under this award.<br><br>(b) For purposes of this section:<br>(1) "Produced in the United States" means, for iron and steel products, that all manufacturing processes, from the initial melting stage through the application of coatings, occurred in the United States.<br>(2) "Manufactured products" means items and construction materials composed in whole or in part of non-ferrous metals such as aluminum; plastics and polymer-based products such as polyvinyl chloride pipe; aggregates such as concrete; glass, including optical fiber; and lumber. | 2 CFR 200 APPENDIX II (L) | Contractor RFP/IFB<br>Contractor RFQ<br>Subrecipients |
| | **Additional 2 CFR 200 references & Other Regulations** | | |
| None | The Federal awarding agency must establish conflict of interest policies for Federal awards. The Non-Federal entity must disclose in writing any potential conflict of interest to the Federal awarding agency or pass-through entity in accordance with applicable Federal awarding agency policy. | 2 CFR 200.112 | Contractor RFP/IFB<br>Contractor RFQ<br>Subrecipients |
| None | Contracting with HUB, small and minority businesses, women's business enterprises, and labor surplus area firms.<br>(a) The Non-Federal entity must take all necessary affirmative steps to assure that minority businesses, women's business enterprises, and labor surplus area firms are used when possible.<br>(b) Affirmative steps must include:<br>(1) Placing qualified small and minority businesses and women's business enterprises on solicitation lists;<br>(2) Assuring that small and minority businesses, and women's business enterprises are solicited whenever they are potential sources;<br>(3) Dividing total requirements, when economically feasible, into smaller tasks or quantities to permit maximum participation by small and minority businesses, and women's business enterprises;<br>(4) Establishing delivery schedules, where the requirement permits, which encourage participation by small and minority businesses, and women's | 2 CFR 200.321 | Contractor RFP/IFB<br>Contractor RFQ<br>Subrecipients |

| THRESHOLD | PROVISION | CITATION | PROVISION APPLIES TO |
|---|---|---|---|
| | business enterprises;<br>(5) Using the services and assistance, as appropriate, of such organizations as the Small Business Administration and the Minority Business Development Agency of the Department of Commerce; and<br>(6) Requiring the prime contractor, if subcontracts are to be let, to take the affirmative steps listed in paragraphs (b)(1) through (5) of this section. | | |
| >$10,000 | An NFE (Non-Federal Entity) that is a state agency or an agency of a political subdivision of a state, and the NFE's contractors must comply with Section 6002 of the Solid Waste Disposal Act.<br>Applicable NFEs must include a contract provision requiring compliance with this requirement.<br>This includes contracts awarded by a state agency or political subdivision of a state and its contractors for certain items, as designated by the EPA, with a purchase price greater than $10,000.<br>Indian Tribal Governments and nonprofit organizations are not required to comply with this provision. Additional requirements are listed below. | 2 CFR 200.323 | Contractor RFP/IFB<br>Contractor RFQ<br>Subrecipients |
| None | Financial records, supporting documents, statistical records, and all other Non-Federal entity records pertinent to a Federal award must be retained for a period of three years from the date of submission of the final expenditure report or, for Federal awards that are renewed quarterly or annually, from the date of the submission of the quarterly or annual financial report, respectively, as reported to the Federal awarding agency or pass-through entity in the case of a subrecipient. Federal awarding agencies and pass-through entities must not impose any other record retention requirements upon Non-Federal entities. **All records related to ARPA shall be maintained for 5 years per the ARPA terms, conditions, and regulations.** The only exceptions are the following:<br>(a) If any litigation, claim, or audit is started before the expiration of the 3-year period, the records must be retained until all litigation, claims, or audit findings involving the records have been resolved and final action taken. **All records related to ARPA shall be maintained for 5 years per the ARPA terms, conditions, and regulations.**<br>(b) When the Non-Federal entity is notified in writing by the Federal awarding agency, cognizant agency for audit, oversight agency for audit, cognizant agency for indirect costs, or pass-through entity to extend the retention period.<br>(c) Records for real property and equipment acquired with Federal funds must be retained for 3 years after final disposition. All records related to ARPA shall be maintained for 5 years per the ARPA terms and conditions and regulations.<br>(d) When records are transferred to or maintained by the Federal awarding agency or pass-through entity, the 3-year retention requirement is not applicable to the Non-Federal entity All records related to ARPA shall be maintained for 5 years per the ARPA terms and conditions and regulations. **All records related to ARPA shall be maintained for 5 years per the ARPA terms, conditions, and regulations.**<br>(e) Records for program income transactions after the period of performance. In some cases, recipients must report program income after the period of performance. Where there is such a requirement, the retention period for the records pertaining to the earning of the program income starts from the end of the Non-Federal entity's fiscal year in which the program income is earned.<br>(f) Indirect cost rate proposals and cost allocations plans. This paragraph applies to the following types of documents and their supporting records: Indirect cost rate computations or proposals, cost allocation plans, and any similar accounting computations of the rate at which a particular group of costs is chargeable (such as computer usage chargeback rates or composite fringe benefit rates).<br>(1) *If submitted for negotiation.* If the proposal, plan, or other computation is | 2 CFR 200.334 | Contractor RFP/IFB<br>Contractor RFQ<br>Subrecipients<br>Vendors |

| THRESHOLD | PROVISION | CITATION | PROVISION APPLIES TO |
|---|---|---|---|
| | required to be submitted to the Federal Government (or to the pass-through entity) to form the basis for negotiation of the rate, then the 3-year retention period for its supporting records starts from the date of such submission. **All records related to ARPA shall be maintained for 5 years per the ARPA terms, conditions, and regulations.**<br>(2) *If not submitted for negotiation.* If the proposal, plan, or other computation is not required to be submitted to the Federal Government (or to the pass-through entity) for negotiation purposes, then the 3-year retention period for the proposal, plan, or computation and its supporting records starts from the end of the fiscal year (or other accounting period) covered by the proposal, plan, or other computation. **All records related to ARPA shall be maintained for 5 years per the ARPA terms, conditions, and regulations.** | | |
| None | The Federal awarding agency and the Non-Federal entity should, whenever practicable, collect, transmit, and store Federal award-related information in open and machine-readable formats rather than in closed formats or on paper in accordance with applicable legislative requirements. A machine-readable format is a format in a standard computer language (not English text) that can be read automatically by a web browser or computer system. The Federal awarding agency or pass-through entity must always provide or accept paper versions of Federal award-related information to and from the Non-Federal entity upon request. If paper copies are submitted, the Federal awarding agency or pass-through entity must not require more than an original and two copies. When original records are electronic and cannot be altered, there is no need to create and retain paper copies. When original records are paper, electronic versions may be substituted through the use of duplication or other forms of electronic media provided that they are subject to periodic quality control reviews, provide reasonable safeguards against alteration, and remain readable. | 2 CFR 200.336 | Contractor RFP/IFB<br>Contractor RFQ<br>Subrecipients |
| None | CONTRACTS WITH COMPANIES ENGAGED IN BUSINESS WITH IRAN, SUDAN, OR FOREIGN TERRORIST ORGANIZATION PROHIBITED. A governmental entity may not enter into a governmental contract with a company that is identified on a list prepared and maintained under Section 806.051, 807.051, or 2252.153. The term "foreign terrorist organization" in this paragraph has the meaning assigned to such a term in Section 2252.151(2) of the Texas Government Code. | Texas Government Code 2252.152 | Contractor RFP/IFB<br>Contractor RFQ<br>Subrecipients |
| >$100,000 | PROVISION REQUIRED IN CONTRACT.<br>(a) This section applies only to a contract that:<br>(1) is between a governmental entity and a company with 10 or more full-time employees; and<br>(2) has a value of $100,000 or more that is to be paid wholly or partly from public funds of the governmental entity.<br>(b) A governmental entity may not enter into a contract with a company for goods or services unless the contract contains a written verification from the company that it:<br>(1) does not boycott Israel; and<br>(2) will not boycott Israel during the term of the contract. | Texas Government Code 2271 | Contractor RFP/IFB<br>Contractor RFQ<br>Subrecipients<br>Vendors |
| For Critical Infrastructure Projects | PROHIBITION ON CONTRACTS WITH CERTAIN FOREIGN-OWNED COMPANIES IN CONNECTION WITH CRITICAL INFRASTRUCTURE.<br>PROHIBITED CONTRACTS.<br>(a) A governmental entity may not enter into a contract or other agreement relating to critical infrastructure in this state with a company:<br>(1) if, under the contract or other agreement, the company would be granted direct or remote access to or control of critical infrastructure in this state, excluding access specifically allowed by the governmental entity for product | Texas Government Code, Title 10, Subtitle F, Chapter 2274.0102 | Subrecipients<br>EC 6.1 Awardees |

| THRESHOLD | PROVISION | CITATION | PROVISION APPLIES TO |
|---|---|---|---|
| | warranty and support purposes; and<br>(2) if the governmental entity knows that the company is:<br>(A) owned by or the majority of stock or other ownership interest of the company is held or controlled by:<br>(i) individuals who are citizens of China, Iran, North Korea, Russia, or a designated country; or<br>(ii) a company or other entity, including a governmental entity, that is owned or controlled by citizens of or is directly controlled by the government of China, Iran, North Korea, Russia, or a designated country; or<br>(B) headquartered in China, Iran, North Korea, Russia, or a designated country.<br>(b) The prohibition described by Subsection (a) applies regardless of whether:<br>(1) the company's or its parent company's securities are publicly traded; or<br>(2) the company or its parent company is listed on a public stock exchange as:<br>(A) a Chinese, Iranian, North Korean, or Russian company; or<br>(B) a company of a designated country. | | |
| None | Mandatory standards and policies relating to energy efficiency which are contained in the state energy conservation plan issued in compliance with the Energy Policy and Conservation Act. | 42 U.S.C. 6201 | Contractor RFP/IFB<br>Subrecipients |
| None | The Firm agrees that no otherwise qualified individual with disabilities shall, solely by reason of his/her disability, be denied the benefits of, or be subjected to discrimination, including discrimination in employment, under any program or activity receiving federal financial assistance. | Section 504 of the Rehabilitation Act of 1973, as amended. | Subrecipients |
| | **ARPA Terms & Conditions** | | |
| ARPA Terms, Conditions, & Records | 1. Use of Funds.<br>a. Recipient understands and agrees that the funds disbursed under this award may only be used in compliance with section 603(c) of the Social Security Act (the Act), Treasury's regulations implementing that section, and guidance issued by Treasury regarding the foregoing.<br>b. Recipient will determine prior to engaging in any project using this assistance that it has the institutional, managerial, and financial capability to ensure proper planning, management, and completion of such project. | Section 9901 of the American Rescue Plan Act, Pub. L. No. 117-2;<br>Section 602(b), 603(b) and/or 603(c) as applicable | Subrecipients |
| ARPA Terms, Conditions, & Records | 2. Period of Performance. The period of performance for this award begins on the date hereof and ends on December 31, 2026. As set forth in Treasury's implementing regulations, Recipients may use award funds to cover eligible costs incurred during the period that begins on March 3, 2021, and ends on December 31, 2024. | Section 9901 of the American Rescue Plan Act, Pub. L. No. 117-2;<br>Section 602(b), 603(b) and/or 603(c) as applicable | Subrecipients |
| ARPA Terms, Conditions, & Records | 3. Reporting. Recipient agrees to comply with any reporting obligations established by Treasury as they relate to this award. | Section 9901 of the American Rescue Plan Act, Pub. L. No. 117-2;<br>Section 602(b), 603(b) and/or 603(c) as applicable | Subrecipients |

| THRESHOLD | PROVISION | CITATION | PROVISION APPLIES TO |
|---|---|---|---|
| ARPA Terms, Conditions, & Records | 4. Maintenance of and Access to Records<br>a. Recipient shall maintain records and financial documents sufficient to evidence compliance with section 603(c) of the Act, Treasury's regulations implementing that section, and guidance issued by Treasury regarding the foregoing.<br>b. The Treasury Office of Inspector General and the Government Accountability Office, or their authorized representatives, shall have the right of access to records (electronic and otherwise) of Recipient in order to conduct audits or other investigations.<br>c. Records shall be maintained by Recipient for a period of five (5) years after all funds have been expended or returned to Treasury, whichever is later. | Section 9901 of the American Rescue Plan Act, Pub. L. No. 117-2;<br>Section 602(b), 603(b) and/or 603(c) as applicable | Contractor RFP/IFB<br>Contractor RFQ<br>Subrecipients<br>Vendors |
| ARPA Terms, Conditions, & Records | 5. Pre-award Costs. Pre-award costs, as defined in 2 CFR § 200.458, may not be paid with funding from this award. | Section 9901 of the American Rescue Plan Act, Pub. L. No. 117-2;<br>Section 602(b), 603(b) and/or 603(c) as applicable | Subrecipients |
| ARPA Terms, Conditions, & Records | 6. Administrative Costs. Recipient may use funds provided under this award to cover both direct and indirect costs. | Section 9901 of the American Rescue Plan Act, Pub. L. No. 117-2;<br>Section 602(b), 603(b) and/or 603(c) as applicable | Subrecipients |
| ARPA Terms, Conditions, & Records | 7. Cost Sharing. Cost sharing or matching funds are not required to be provided by Recipient. | Section 9901 of the American Rescue Plan Act, Pub. L. No. 117-2;<br>Section 602(b), 603(b) and/or 603(c) as applicable | Subrecipients |
| ARPA Terms, Conditions, & Records | 8. Conflicts of Interest. Recipient understands and agrees it must maintain a conflict of interest policy consistent with 2 CFR § 200.318(c) and that such conflict of interest policy is applicable to each activity funded under this award. Recipient and subrecipients must disclose in writing to Treasury or the pass-through entity, as appropriate, any potential conflict of interest affecting the awarded funds in accordance with 2 CFR § 200.112. | Section 9901 of the American Rescue Plan Act, Pub. L. No. 117-2;<br>Section 602(b), 603(b) and/or 603(c) as applicable | Contractor RFP/IFB<br>Contractor RFQ<br>Subrecipients<br>Vendors |
| ARPA Terms, Conditions, & Records | 9. Compliance with Applicable Law and Regulations.<br>a. Recipient agrees to comply with the requirements of section 603 of the Act, regulations adopted by Treasury pursuant to section 603(f) of the Act, and guidance issued by Treasury regarding the foregoing. Recipient also agrees to comply with all other applicable federal statutes, regulations, and executive orders, and Recipient shall provide for such compliance by other parties in any agreements it enters into with other parties relating to this award.<br>b. Federal regulations applicable to this award include, without limitation, the following:<br>i. Uniform Administrative Requirements, Cost Principles, and Audit Requirements for Federal Awards, 2 CFR Part 200, other than such provisions as Treasury may determine are inapplicable to this Award and subject to such exceptions as may be otherwise provided by Treasury. Subpart F – Audit Requirements of the Uniform Guidance, implementing the Single Audit Act, shall apply to this award.<br>ii. Universal Identifier and System for Award Management (SAM), 2 CFR Part 25, pursuant to which the award term set forth in Appendix A to 2 CFR Part 25 is | Section 9901 of the American Rescue Plan Act, Pub. L. No. 117-2;<br>Section 602(b), 603(b) and/or 603(c) as applicable | Contractor RFP/IFB<br>Contractor RFQ<br>Subrecipients<br>Vendors |

| THRESHOLD | PROVISION | CITATION | PROVISION APPLIES TO |
|---|---|---|---|
| | hereby incorporated by reference.<br>iii. Reporting Subaward and Executive Compensation Information, 2 CFR Part 170, pursuant to which the award term set forth in Appendix A to 2 CFR Part 170 is hereby incorporated by reference.<br>iv. OMB Guidelines to Agencies on Governmentwide Debarment and Suspension (Non-procurement), 2 CFR Part 180, including the requirement to include a term or condition in all lower tier covered transactions (contracts and subcontracts described in 2 CFR Part 180, subpart B) that the award is subject to 2 CFR Part 180 and Treasury's implementing regulation at 31 CFR Part 19.<br>v. Recipient Integrity and Performance Matters, pursuant to which the award term set forth in 2 CFR Part 200, Appendix XII to Part 200 is hereby incorporated by reference.<br>vi. Governmentwide Requirements for Drug-Free Workplace, 31 CFR Part 20.<br>vii. New Restrictions on Lobbying, 31 CFR Part 21.<br>viii. Uniform Relocation Assistance and Real Property Acquisitions Act of 1970 (42 U.S.C. §§ 4601-4655) and implementing regulations.<br>ix. Generally applicable federal environmental laws and regulations.<br><br>c. Statutes and regulations prohibiting discrimination applicable to this award include, without limitation, the following:<br>i. Title VI of the Civil Rights Act of 1964 (42 U.S.C. §§ 2000d et seq.) and Treasury's implementing regulations at 31 CFR Part 22, which prohibit discrimination on the basis of race, color, or national origin under programs or activities receiving federal financial assistance;<br>ii. The Fair Housing Act, Title VIII of the Civil Rights Act of 1968 (42 U.S.C. §§ 3601 et seq.), which prohibits discrimination in housing on the basis of race, color, religion, national origin, sex, familial status, or disability;<br>iii. Section 504 of the Rehabilitation Act of 1973, as amended (29 U.S.C. § 794), which prohibits discrimination on the basis of disability under any program or activity receiving federal financial assistance;<br>iv. The Age Discrimination Act of 1975, as amended (42 U.S.C. §§ 6101 et seq.), and Treasury's implementing regulations at 31 CFR Part 23, which prohibit discrimination on the basis of age in programs or activities receiving federal financial assistance; and<br>v. Title II of the Americans with Disabilities Act of 1990, as amended (42 U.S.C. §§ 12101 et seq.), which prohibits discrimination on the basis of disability under programs, activities, and services provided or made available by state and local governments or instrumentalities or agencies thereto. | | |
| ARPA Terms, Conditions, & Records | 10. Remedial Actions. In the event of Recipient's noncompliance with section 603 of the Act, other applicable laws, Treasury's implementing regulations, guidance, or any reporting or other program requirements, Treasury may impose additional conditions on the receipt of a subsequent tranche of future award funds, if any, or take other available remedies as set forth in 2 CFR § 200.339. In the case of a violation of section 603(c) of the Act regarding the use of funds, previous payments shall be subject to recoupment as provided in section 603(e) of the Act. | Section 9901 of the American Rescue Plan Act, Pub. L. No. 117-2;<br>Section 602(b), 603(b) and/or 603(c) as applicable | Subrecipients |
| ARPA Terms, Conditions, & Records | 11. Hatch Act. Recipient agrees to comply, as applicable, with requirements of the Hatch Act (5 U.S.C. §§ 1501-1508 and 7324-7328), which limit certain political activities of State or local government employees whose principal employment is in connection with an activity financed in whole or in part by this federal assistance. | Section 9901 of the American Rescue Plan Act, Pub. L. No. 117-2;<br>Section 602(b), 603(b) and/or 603(c) as applicable | Subrecipients |
| ARPA Terms, Conditions, & Records | 12. False Statements. Recipient understands that making false statements or claims in connection with this award is a violation of federal law and may result in criminal, civil, or administrative sanctions, including fines, imprisonment, civil damages and penalties, debarment from participating in federal awards or | Section 9901 of the American Rescue Plan Act, Pub. L. No. 117-2; | Contractor RFP/IFB<br>Contractor RFQ<br>Subrecipients<br>Vendors |

| THRESHOLD | PROVISION | CITATION | PROVISION APPLIES TO |
|---|---|---|---|
| | contracts, and/or any other remedy available by law. | Section 602(b), 603(b) and/or 603(c) as applicable | |
| ARPA Terms, Conditions, & Records | 13. Publications. Any publications produced with funds from this award must display the following language: "This project [is being] [was] supported, in whole or in part, by federal award number [enter project FAIN] awarded to [name of Recipient] by the U.S. Department of the Treasury." | Section 9901 of the American Rescue Plan Act, Pub. L. No. 117-2; Section 602(b), 603(b) and/or 603(c) as applicable | Subrecipients |
| ARPA Terms, Conditions, & Records | 14. Debts Owed the Federal Government.<br>a. Any funds paid to Recipient (1) in excess of the amount to which Recipient is finally determined to be authorized to retain under the terms of this award; (2) that are determined by the Treasury Office of Inspector General to have been misused; or (3) that are determined by Treasury to be subject to a repayment obligation pursuant to section 603(e) of the Act and have not been repaid by Recipient shall constitute a debt to the federal government.<br>b. Any debts determined to be owed the federal government must be paid promptly by Recipient. A debt is delinquent if it has not been paid by the date specified in Treasury's initial written demand for payment, unless other satisfactory arrangements have been made or if the Recipient knowingly or improperly retains funds that are a debt as defined in paragraph 14(a). Treasury will take any actions available to it to collect such a debt. | Section 9901 of the American Rescue Plan Act, Pub. L. No. 117-2; Section 602(b), 603(b) and/or 603(c) as applicable | Subrecipients |
| ARPA Terms, Conditions, & Records | 15. Disclaimer.<br>a. The United States expressly disclaims any and all responsibility or liability to Recipient or third persons for the actions of Recipient or third persons resulting in death, bodily injury, property damages, or any other losses resulting in any way from the performance of this award or any other losses resulting in any way from the performance of this award or any contract, or subcontract under this award.<br>b. The acceptance of this award by Recipient does not in any way establish an agency relationship between the United States and Recipient. | Section 9901 of the American Rescue Plan Act, Pub. L. No. 117-2; Section 602(b), 603(b) and/or 603(c) as applicable | Subrecipients |
| ARPA Terms, Conditions, & Records | 16. Protections for Whistleblowers.<br>a. In accordance with 41 U.S.C. § 4712, Recipient may not discharge, demote, or otherwise discriminate against an employee in reprisal for disclosing to any of the list of persons or entities provided below, information that the employee reasonably believes is evidence of gross mismanagement of a federal contract or grant, a gross waste of federal funds, an abuse of authority relating to a federal contract or grant, a substantial and specific danger to public health or safety, or a violation of law, rule, or regulation related to a federal contract (including the competition for or negotiation of a contract) or grant.<br>b. The list of persons and entities referenced in the paragraph above includes the following:<br>i. A member of Congress or a representative of a committee of Congress;<br>ii. An Inspector General;<br>iii. The Government Accountability Office;<br>iv. A Treasury employee responsible for contract or grant oversight or management;<br>v. An authorized official of the Department of Justice or other law enforcement agency;<br>vi. A court or grand jury; or<br>vii. A management official or other employee of Recipient, contractor, or subcontractor who has the responsibility to investigate, discover, or address misconduct. | Section 9901 of the American Rescue Plan Act, Pub. L. No. 117-2; Section 602(b), 603(b) and/or 603(c) as applicable | Contractor RFP/IFB<br>Contractor RFQ<br>Subrecipients<br>Vendors |

| THRESHOLD | PROVISION | CITATION | PROVISION APPLIES TO |
|---|---|---|---|
| | c. Recipient shall inform its employees in writing of the rights and remedies provided under this section, in the predominant native language of the workforce. | | |
| ARPA Terms, Conditions, & Records | 17. Increasing Seat Belt Use in the United States. Pursuant to Executive Order 13043, 62 FR 19217 (Apr. 18, 1997), Recipient should encourage its contractors to adopt and enforce on-the-job seat belt policies and programs for their employees when operating company-owned, rented or personally owned vehicles. | Section 9901 of the American Rescue Plan Act, Pub. L. No. 117-2; Section 602(b), 603(b) and/or 603(c) as applicable | Contractor RFP/IFB<br>Contractor RFQ<br>Subrecipients<br>Vendors |
| ARPA Terms, Conditions, & Records | 18. Reducing Text Messaging While Driving. Pursuant to Executive Order 13513, 74 FR 51225 (Oct. 6, 2009), Recipient should encourage its employees, subrecipients, and contractors to adopt and enforce policies that ban text messaging while driving, and Recipient should establish workplace safety policies to decrease accidents caused by distracted drivers | Section 9901 of the American Rescue Plan Act, Pub. L. No. 117-2; Section 602(b), 603(b) and/or 603(c) as applicable | Contractor RFP/IFB<br>Contractor RFQ<br>Subrecipients<br>Vendors |

# EXHIBIT C – OTHER RELEVANT INFORMATION/SPECIAL CONDITIONS

Attach any relevant specifications, e.g., municipal/state code specifications, etc., that will be applicable to this purchase.

# ATTACHMENTS

**THE FOLLOWING DOCUMENTS MUST BE COMPLETED AND INCLUDED IN THE RESPONSE PACKAGE:**

| | | |
|---|---|---|
| 1. | ATTACHMENT A | SIGNED SOLICITATION RESPONSE COVER SHEET/ACKNOWLEDGEMENT OF ADDENDA/SUBMISSION CHECKLIST |
| 2. | ATTACHMENT B | PRICING SHEET |
| 3. | ATTACHMENT C | SYSTEM FOR AWARD MANAGEMENT (SAM.GOV) RECORD SEARCH |
| 4. | ATTACHMENT D | CUSTOMER/CLIENT REFERENCES |
| 5. | ATTACHMENT E | CERTIFICATE OF INSURANCE (IF APPLICABLE) |
| 6. | ATTACHMENT F | ETHICS AND CONFLICT OF INTEREST ACKNOWLEDGEMENT |
| 7. | ATTACHMENT G | STATEMENT OF CONFLICT OF INTEREST (IF ANY) |
| 8. | ATTACHMENT H | CONFLICT OF INTEREST QUESTIONNAIRE (FORM CIQ) |
| 9. | ATTACHMENT I | DISCLOSURE OF LOBBYING ACTIVITIES SF-LLL CERTIFICATION |
| 10. | ATTACHMENT J | TEXAS ETHICS COMMISSION CERTIFICATE OF INTERESTED PARTIES (FORM 1295) |
| 11. | ATTACHMENT K | BIDDER'S CERTIFICATION |
| 12. | ATTACHMENT L | NON-COLLUSION AFFIDAVIT |

# ATTACHMENT A:

## SOLICITATION RESPONSE COVER SHEET/ACKNOWLEDGMENT OF ADDENDA/SUBMISSION CHECKLIST

| | |
|---|---|
| **Title of Solicitation:** | |
| **Name of Respondent:** | |
| **Company:** | |
| **Mailing Address:** | |
| **City, State, Zip:** | |
| **Phone Number:** | |
| **Company Contact Email Address:** | |
| **Texas Vendor ID Number:** | |
| **EIN/Federal Tax Identification Number:** | |

**ACKNOWLEDGEMENT OF ADDENDA**

| ADDENDUM NO. | DATE ISSUED |
|---|---|
| | |
| | |
| | |
| | |

☐ Please check this box if no addenda were issued.

# ATTACHMENT A (CONTINUED)

## SOLICITATION RESPONSE COVER SHEET/ACKNOWLEDGMENT OF ADDENDA/ SUBMISSION CHECKLIST

This checklist is provided for the Respondent's use in assuring compliance with required documentation; however, it does not include all specification requirements and does not relieve the Respondent of the need to read and comply with the specifications. Your submittal of the documents attests to the fact that you have read and/or included the documents with your response.

**SUBMISSION CHECKLIST**

| CHECK FOR COMPLETION | DOCUMENTS REQUIRED FOR SUBMISSION |
|---|---|
| ☐ | A. Solicitation Response Cover Sheet/Acknowledgement of Addenda/Submission Checklist |
| ☐ | B. Pricing Sheet |
| ☐ | C. System for Award Management (SAM.gov) Record Search |
| ☐ | D. Customer/Client References |
| ☐ | E. Certificate of Insurance (if applicable) |
| ☐ | F. Ethics and Conflict of Interest Acknowledgement |
| ☐ | G. Statement of Conflicts of Interest (if any) |
| ☐<br>☐ | H. Conflict of Interest Questionnaire (Form CIQ)<br>Please check this box if the Respondent does not identify a conflict of interest and therefore, will not be submitting the Conflict of Interest Questionnaire Form CIQ. |
| ☐<br>☐ | I. Disclosure of Lobbying Activities SF-LLL Certification<br>(Required for all proposals exceeding $100,000)<br>Please check this box if the proposal does not exceed $100,000. |
| N/A | J. Texas Ethics Commission Certificate of Interested Parties (Form 1295)<br>(This is a sample and is only required to be completed by the Respondent selected for award.) |
| ☐ | K. Bidder's Certification |
| ☐ | L. Non-Collusion Affidavit |
| ☐ | |
| ☐ | |

The Respondent's authorized agent must sign this document to acknowledge having read this solicitation carefully and completely, including the list of addenda, and that the information submitted is true and correct.

| | |
|---|---|
| **AUTHORIZED AGENT NAME:** | |
| **AUTHORIZED SIGNATURE:** | |
| **TITLE OF AUTHORIZED AGENT:** | |
| **DATE OF SIGNATURE:** | |

## ATTACHMENT B: PRICING SHEET

Respondent shall complete and submit the following pricing sheet with the proposal response package. The Entity reserves the right to make an award on the basis of best value in the interest of the Entity. ALL PRICING MUST BE FIRM FIXED PRICING.

| ITEM | DESCRIPTION | QUANTITY | UNIT OF MEASURE | UNIT PRICE | EXTENSION |
|---|---|---|---|---|---|
| **1** | Entity should enter the description and quantity of the services/products as contained in the Scope of Work in Exhibit A | | | $ | $ |
| **2** | | | | $ | $ |
| **3** | | | | $ | $ |
| **4** | | | | $ | $ |
| **5** | | | | $ | $ |
| **TOTAL FIRM FIXED PRICE** | | | | | $ |
| **6** | **DELIVERY** – Number of calendar days for delivery after receipt of the order: | | | 90 calendar days | |

| | |
|---|---|
| Name of Firm: | |
| RFP #: | |
| RFP Name: | |

### AUTHORIZED AGENT – SIGNATURE AND CONTACT INFORMATION

The Respondent's authorized agent must sign this document to acknowledge they read this solicitation carefully and completely, and the information submitted is true and correct.

| | |
|---|---|
| **SIGNATURE OF AUTHORIZED AGENT:** | |
| **PRINTED NAME OF AUTHORIZED AGENT:** | |
| **TITLE OF AUTHORIZED AGENT:** | |
| **DATE OF SIGNATURE:** | |

## ATTACHMENT C: SYSTEM FOR AWARD MANAGEMENT (SAM.GOV) RECORD SEARCH

This project is funded by Coronavirus State and Local Fiscal Recovery Funds which requires all contractors and vendors to be in good standing according to SAM.gov and the Texas State Comptroller's office.

**Verification of SAM.gov Status**

1. Respondent must not be suspended or debarred at the time of the proposal submittal. The proposal response package must include a completed Non-Debarment Certification Form located **on the next page** herein.
2. All Respondents must be pre-vetted for eligibility to perform the outlined ARPA funded scope of work. A printed screenshot from the SAM.gov website verifies whether the Vendor is excluded from contract participation at the federal level.

**Contract Award**

The ARPA Award Recipient must verify the SAM.gov status of the Respondent(s) selected for contract award prior to execution of the contract as stated in the Non-Debarment Certification Form. The final verification of the Respondent's SAM.gov status is completed prior to contract award, and in addition to the initial verification documentation provided with the proposal response submittal.

| NON-DEBARMENT CERTIFICATION FORM | | | |
|---|---|---|---|
| **COMPANY/ENTITY LEGAL NAME:** | | | |
| **STREET ADDRESS:** | | | |
| **CITY:** | **STATE:** | **ZIP:** | |
| **CONTACT NAME:** | | | |
| **CONTACT EMAIL:** | | **CONTACT PHONE:** | |
| ***UEI #** | | ****TIN #** | |

*Subrecipients are required to have a Unique Entity Identifier (UEI) Number prior to an award. All entities must be pre-vetted for eligibility/ability to perform the outlined ARPA funded scope of work and a record (PDF of SAM.gov screenshot) of SAM debarment clearance must be obtained prior to entering into any final contracts. **Beneficiary Entities are required to have UEI and/or TIN.

**APPLICABLE REGULATIONS: As stated in the ARPA/SLFRF Terms & Conditions:** *"OMB Guidelines to Agencies on Governmentwide Debarment and Suspension (Nonprocurement), 2 CFR Part 180, including the requirement to include a term or condition in all lower tier covered transactions (contracts and subcontracts described in 2 CFR Part 180, subpart B) that the award is subject to 2 CFR Part 180 and Treasury's implementing regulation at 31 CFR Part 19."*

**Also, Federal Executive Order (E.O.) 12549:** "Debarment" requires that contractors, beneficiaries or subrecipient organizations and their principals – who are receiving awards, using federal funds, are not debarred, suspended, proposed for debarment, declared ineligible, or voluntarily excluded by any federal department or agency from doing business with the federal government. By signing this document, you certify that your organization and its principals are not debarred. Failure to comply or attempts to edit this language may disqualify you from receiving or retaining funds. Information on debarment is available at the following website: www.sam.gov

**Be advised that we may pursue available remedies per 2 CFR 180.360 as an ARPA recipient entity:** *"If a federal agency later determines that you failed to tell the [awarding agency] that you were excluded or disqualified at the time you entered into the covered transaction with that person/awarding agency, the agency may pursue any available remedies, including suspension and debarment."*

| [INITIAL] | CERTIFICATION & SIGNATURE |
|---|---|
| | **We hereby certify that we are not excluded, disqualified, or debarred from receiving federally funded awards.** |
| | **We hereby confirm that if that status should change within the course of this agreement, we will provide notification immediately. Failure to do so may result in this agreement's termination and/or the repayment of funds.** |

*Your signature certifies that the information provided on this form is correct and that neither you nor your principal(s) is/are presently debarred, suspended, proposed for debarment, declared ineligible, or voluntarily excluded from participation in this transaction by any federal department or agency.*

_____

**SIGNATURE**

_____

**PRINTED NAME & TITLE** **DATE**

| FOR DEPARTMENT USE ONLY | | |
|---|---|---|
| SAM Debarment/Certification Record of Clearance | Yes [ ] No [ ] | Note: |
| State of Texas Debarred Vendor List Cleared | Yes [ ] No [ ] | Note: |
| Verified By: | Yes [ ] No [ ] | Date: |

## ATTACHMENT D: CUSTOMER/CLIENT REFERENCES

Respondents shall use Attachment D to describe a minimum of three (3) and maximum of five (5) references for jobs, and corresponding references, completed within last five (5) years.

**Respondent's Name:** _____

The references shall illustrate recent experience successfully completing work of a similar nature and scope as the work described in this RFP. This form may be modified as needed to comply with the requirement to document company information. ***Failure to return this attachment (or a reasonable facsimile) may result in the proposal being considered non-responsive. Failure to provide references may result in the proposal being considered non-responsive.***

**REFERENCE 1:**

| | |
|---|---|
| **Company Name:** | |
| **Company Address:** | |
| **Contact Name/Title/Phone:** | |
| **Contact Email:** | |
| **Contract Award Date:** | |
| **Contract Completion Date:** | |
| **Contract Project Name:** | |
| **Brief Description of Services:** | |

**REFERENCE 2:**

| | |
|---|---|
| **Company Name:** | |
| **Company Address:** | |
| **Contact Name/Title/Phone:** | |
| **Contact Email:** | |
| **Contract Award Date:** | |
| **Contract Completion Date:** | |
| **Contract Project Name:** | |
| **Brief Description of Services:** | |

**REFERENCE 3:**

| | |
|---|---|
| **Company Name:** | |
| **Company Address:** | |
| **Contact Name/Title/Phone:** | |
| **Contact Email:** | |
| **Contract Award Date:** | |
| **Contract Completion Date:** | |
| **Contract Project Name:** | |
| **Brief Description of Services:** | |

**REFERENCE 4:**

| | |
|---|---|
| **Company Name:** | |
| **Company Address:** | |
| **Contact Name/Title/Phone:** | |
| **Contact Email:** | |
| **Contract Award Date:** | |
| **Contract Completion Date:** | |
| **Contract Project Name:** | |
| **Brief Description of Services:** | |

**REFERENCE 5:**

| | |
|---|---|
| **Company Name:** | |
| **Company Address:** | |
| **Contact Name/Title/Phone:** | |
| **Contact Email:** | |
| **Contract Award Date:** | |
| **Contract Completion Date:** | |
| **Contract Project Name:** | |
| **Brief Description of Services:** | |

# ATTACHMENT E: CERTIFICATE OF INSURANCE
## (PROPOSAL RESPONDER SUPPLIES INSURANCE WITH THE PROPOSAL PACKAGE)

**INSURANCE REQUIREMENTS**

If requested, the Respondent shall supply an original, certified copy of an insurance certificate listing **the Entity** as additional insured. The successful Respondent will be required to maintain, at all times during performance of the contract, the insurance detailed below. Failure to provide this insurance certificate within the specified amount of time may result in disqualification of bid.

a. Workers' Compensation Insurance as required by laws and regulations applicable to and covering employees of Contract engaged in the performance of the work under this agreement with a limit of not less than $1,000,000.00.

b. Employers' Liability Insurance protecting Responder against common law liability, in the absence of statutory liability, for employee bodily injury arising out of the master-servant relationship with a limit of not less than $1,000,000.00.

c. Comprehensive General Liability Insurance including products/completed operation with limits of liability of not less than: Bodily Injury $1,000,000.00 per each person, $2,000,000.00 per each occurrence/ aggregate; Property Damage $1,000,000.00 per each occurrence;

d. Excess Liability Insurance Comprehensive General Liability, Comprehensive Automobile Liability and coverages afforded by the policies above, with the minimum limits of $_____ excess of specified limits.

# ATTACHMENT F: ETHICS AND CONFLICT OF INTEREST ACKNOWLEDGEMENT

Public servants are expected to conduct themselves impartially and in a manner that inspires public confidence, while ensuring that responsible contractors have fair and equal access to governmental procurement.

The City of La Marque, Galveston County is committed to protection of government integrity, while also facilitating the recruitment and retention of the skilled personnel necessary to support its operations. To achieve this objective, The City of La Marque, Galveston County has established standards of ethical conduct and conflict of interest policies and expects all vendors, contractors, and subrecipients to adhere to the same core principles as described below.

To achieve these standards, it is essential that those doing business with the City of La Marque, Galveston County also observe the ethical standards prescribed here.

I acknowledge that it is a breach of ethics to attempt to influence any public employee, elected official, or department head to violate the standards of ethical conduct set forth in this code.

I further acknowledge that it is a breach of ethics for any employee of City of La Marque, Galveston County or a vendor doing business with the City of La Marque, Galveston County to participate directly or indirectly in a procurement when the employee or vendor knows that:

A. The employee or any member of the employee's immediate family or household has a substantial financial interest in a company responding to a City of La Marque, Galveston County procurement.

B. A business or organization in which the employee or any member of the employee's immediate family has a financial interest pertaining to the procurement.

I understand that it is a breach of ethics to offer, give, or agree to give any employee of City of La Marque, Galveston County, or for any employee to solicit, demand, accept, or agree to accept from a vendor, a gratuity of consequence or any offer of employment in connection with any decision, approval, disapproval, recommendation, preparation, or any part of a program requirement or purchase request influencing the content of specification or procurement standard, rendering of advice, investigation, auditing, or in any other advisory capacity in any proceeding or controversy, any particular matter pertaining to any program requirement, contract or subcontract, or to any solicitation or proposal therefore pending before City of La Marque, Galveston County.

I acknowledge that it is a breach of ethics for any payment, gratuity, or offer of employment to be made by or on behalf of a subcontractor under a contract to the prime contractor or higher tier subcontractor for any contract for City of La Marque, Galveston County as an inducement for the award of a contract or order.

I certify that I have read and understand the ethical standards set forth by City of La Marque, Galveston County and agree to comply with them in all business dealings with the City of La Marque, Galveston County.

| | |
|---|---|
| _____ | _____ |
| SIGNATURE, VENDOR AUTHORIZED REPRESENTATIVE | COMPANY |
| _____ | _____ |
| PRINTED NAME, TITLE | DATE |

## ATTACHMENT G: STATEMENT OF CONFLICTS OF INTEREST (IF ANY)

The Respondent vendor must describe any conflicts of interest regarding the goods and or services associated with this solicitation.

**The Respondent shall complete and submit Form CIQ (Attachment I) if the service provider or key employees have conflicts regarding these services**.

The conflict of interest statement is required if the service provider or key employees have conflicts regarding the services and a plan for mitigating the conflict(s).

**The Entity** may in its sole discretion determine whether a conflict disqualifies a firm, and/or whether a conflict mitigation plan is acceptable.

**If the Respondent does not identify a conflict, then they should enter no conflict identified on the Submission Checklist (Attachment A).**

## CONFLICT OF INTEREST QUESTIONNAIRE

FORM CIQ

For vendor doing business with local governmental entity

**This questionnaire reflects changes made to the law by H.B. 23, 84th Leg., Regular Session.**

This questionnaire is being filed in accordance with Chapter 176, Local Government Code, by a vendor who has a business relationship as defined by Section 176.001(1-a) with a local governmental entity and the vendor meets requirements under Section 176.006(a).

By law this questionnaire must be filed with the records administrator of the local governmental entity not later than the 7th business day after the date the vendor becomes aware of facts that require the statement to be filed. *See* Section 176.006(a-1), Local Government Code.

A vendor commits an offense if the vendor knowingly violates Section 176.006, Local Government Code. An offense under this section is a misdemeanor.

**OFFICE USE ONLY**

Date Received

1 **Name of vendor who has a business relationship with local governmental entity.**

2 ☐ **Check this box if you are filing an update to a previously filed questionnaire.** (The law requires that you file an updated completed questionnaire with the appropriate filing authority not later than the 7th business day after the date on which you became aware that the originally filed questionnaire was incomplete or inaccurate.)

3 **Name of local government officer about whom the information is being disclosed.**

_____
Name of Officer

4 **Describe each employment or other business relationship with the local government officer, or a family member of the officer, as described by Section 176.003(a)(2)(A). Also describe any family relationship with the local government officer. Complete subparts A and B for each employment or business relationship described. Attach additional pages to this Form CIQ as necessary.**

A. Is the local government officer or a family member of the officer receiving or likely to receive taxable income, other than investment income, from the vendor?

☐ Yes ☐ No

B. Is the vendor receiving or likely to receive taxable income, other than investment income, from or at the direction of the local government officer or a family member of the officer AND the taxable income is not received from the local governmental entity?

☐ Yes ☐ No

5 **Describe each employment or business relationship that the vendor named in Section 1 maintains with a corporation or other business entity with respect to which the local government officer serves as an officer or director, or holds an ownership interest of one percent or more.**

6 ☐ Check this box if the vendor has given the local government officer or a family member of the officer one or more gifts as described in Section 176.003(a)(2)(B), excluding gifts described in Section 176.003(a-1).

7

_____ _____
Signature of vendor doing business with the governmental entity Date

Form provided by Texas Ethics Commission www.ethics.state.tx.us Revised 1/1/2021

## CONFLICT OF INTEREST QUESTIONNAIRE
## For vendor doing business with local governmental entity

A complete copy of Chapter 176 of the Local Government Code may be found at http://www.statutes.legis.state.tx.us/Docs/LG/htm/LG.176.htm. For easy reference, below are some of the sections cited on this form.

**Local Government Code § 176.001(1-a):** "Business relationship" means a connection between two or more parties based on commercial activity of one of the parties. The term does not include a connection based on:

(A) a transaction that is subject to rate or fee regulation by a federal, state, or local governmental entity or an agency of a federal, state, or local governmental entity;

(B) a transaction conducted at a price and subject to terms available to the public; or

(C) a purchase or lease of goods or services from a person that is chartered by a state or federal agency and that is subject to regular examination by, and reporting to, that agency.

**Local Government Code § 176.003(a)(2)(A) and (B):**

(a) A local government officer shall file a conflicts disclosure statement with respect to a vendor if:

***

(2) the vendor:

(A) has an employment or other business relationship with the local government officer or a family member of the officer that results in the officer or family member receiving taxable income, other than investment income, that exceeds $2,500 during the 12-month period preceding the date that the officer becomes aware that

(i) a contract between the local governmental entity and vendor has been executed; or

(ii) the local governmental entity is considering entering into a contract with the vendor;

(B) has given to the local government officer or a family member of the officer one or more gifts that have an aggregate value of more than $100 in the 12-month period preceding the date the officer becomes aware that:

(i) a contract between the local governmental entity and vendor has been executed; or

(ii) the local governmental entity is considering entering into a contract with the vendor.

**Local Government Code § 176.006(a) and (a-1)**

(a) A vendor shall file a completed conflict of interest questionnaire if the vendor has a business relationship with a local governmental entity and:

(1) has an employment or other business relationship with a local government officer of that local governmental entity, or a family member of the officer, described by Section 176.003(a)(2)(A);

(2) has given a local government officer of that local governmental entity, or a family member of the officer, one or more gifts with the aggregate value specified by Section 176.003(a)(2)(B), excluding any gift described by Section 176.003(a-1); or

(3) has a family relationship with a local government officer of that local governmental entity.

(a-1) The completed conflict of interest questionnaire must be filed with the appropriate records administrator not later than the seventh business day after the later of:

(1) the date that the vendor:

(A) begins discussions or negotiations to enter into a contract with the local governmental entity; or

(B) submits to the local governmental entity an application, response to a request for proposals or bids, correspondence, or another writing related to a potential contract with the local governmental entity; or

(2) the date the vendor becomes aware:

(A) of an employment or other business relationship with a local government officer, or a family member of the officer, described by Subsection (a);

(B) that the vendor has given one or more gifts described by Subsection (a); or

(C) of a family relationship with a local government officer.

## ATTACHMENT I: DISCLOSURE OF LOBBYING ACTIVITIES
## SF-LLL CERTIFICATION REGARDING LOBBYING
***(TO BE SUBMITTED WITH EACH BID OR OFFER EXCEEDING $100,000)***

The undersigned certifies, to the best of his or her knowledge and belief, that:

(a) No Federal appropriated funds have been paid or will be paid, by or on behalf of the undersigned, to any person for influencing or attempting to influence an officer or employee of an agency, a Member of Congress, an officer or employee of Congress, or an employee of a Member of Congress in connection with the awarding of any Federal contract, the making of any Federal grant, the making of any Federal loan, the entering into of any cooperative agreement, and the extension, continuation, renewal, amendment, or modification of any Federal contract, grant, loan, or cooperative agreement.

(b) If any funds other than Federal appropriated funds have been paid or will be paid to any person for influencing or attempting to influence an officer or employee of any agency, a Member of Congress, an officer or employee of Congress, or an employee of a Member of Congress in connection with this Federal contract, grant, loan, or cooperative agreement, the undersigned shall complete and submit Standard Form-LLL, "Disclosure of Lobbying Activities," in accordance with its instructions.

(c) The undersigned shall require that the language in paragraphs (a) and (b) of this anti-lobbying certification be included in the award documents for all subawards at all tiers (including subcontracts, subgrants, and contracts under grants, loans, and cooperative agreements) and that all subrecipients shall certify and disclose accordingly.

This certification is a material representation of fact upon which reliance was placed when this transaction was made or entered into. Submission of this certification is a prerequisite for making or entering into this transaction imposed by 31, U.S.C. § 1352 (as amended by the Lobbying Disclosure Act of 1995).

The Contractor, _____ (insert business name), certifies or affirms the truthfulness and accuracy of each statement of its certification and disclosure, if any. In addition, the Contractor understands and agrees that the provisions of 31 U.S.C. § 3801 et seq., apply to this certification and disclosure, if any.

| | |
|---|---|
| **SIGNATURE** | |
| **NAME OF AUTHORIZED AGENT** | |
| **TITLE OF AUTHORIZED AGENT** | |
| **DATE** | |

# DISCLOSURE OF LOBBYING ACTIVITIES – INSTRUCTIONS

Instructions, searching existing data sources, gathering, and maintaining the data needed, and completing and reviewing the collection of information. Send comments regarding the burden estimate or any other aspect of this collection of information, including suggestions for reducing this burden, to the Office of Management and Budget, Paperwork Reduction Project (0348-0046), Washington, DC 20503. Approved by OMB 0348-0046. Complete this form to disclose lobbying activities pursuant to 31 U.S.C. 1352

| **1.Type of Federal Action:**<br><br>☐ a. contract<br>☐ b. grant<br>☐ c. cooperative agreement<br>☐ d. loan<br>☐ e. loan guarantee<br>☐ f. loan insurance | **2. Status of Federal Action:**<br><br>☐ a. bid/offer/application<br>☐ b. initial award<br>☐ c. post-award | **3. Report Type:**<br><br>☐ a. initial filing<br>☐ b. material change |
|---|---|---|

| **4. Name and Address of Reporting Entity:**<br>☐ Prime ☐ Subawardee Tier _____, *if known:*<br><br>Name:<br>Street Address:<br>City, State, Zip:<br>**Congressional District, if known:** | **5. If Reporting Entity in No. 4 is Subawardee, Enter Name and Address of Prime:**<br><br>Name:<br>Street Address:<br>City, State, Zip:<br>**Congressional District, if known:** |
|---|---|
| **6. Federal Department/Agency:** | **7. Federal Program Name/Description:**<br><br>CFDA Number, *if applicable*: _____ |
| **8. Federal Action Number, *if known:*** | **9. Award Amount, *if known*:**<br><br>**$** |
| **10a. Name and Address of Lobbying Registrant**<br><br>Name (First, MI, Last):<br>Street Address:<br>City, State, Zip: | **10b. Individuals Performing Services**<br>*(including address if different from No. 10a)*<br>Name (First, MI, Last):<br>Street Address:<br>City, State, Zip: |

**11.** Information requested through this form is authorized by Title 31 U.S.C., Section 1352. This disclosure of lobbying activities is a material representation of fact upon which reliance was placed by the tier above when this transaction was made or entered into. This disclosure is required pursuant to 31 U.S.C. 1352. This information will be reported to the Congress semi-annually and will be available for public inspection. Any person who fails to file the required disclosure shall be subject to a civil penalty of not less than $10,000 and not more than $100,000 for each such failure.

**Signature: _____**

**Name: _____** **Title: _____**

**Telephone: _____** **Date: _____**

| **Federal Use Only** | **Authorized for Local Reproduction**<br>**Standard Form – LLL (Rev. 7-97)** |
|---|---|

# ATTACHMENT J:TEXAS ETHICS COMMISSION CERTIFICATE OF INTERESTED PARTIES (FORM 1295)

*(TO BE COMPLETED BY THE AWARDED VENDOR PRIOR TO CONTRACT EXECUTION)*

## CERTIFICATE OF INTERESTED PARTIES — FORM 1295

OFFICE USE ONLY

Complete Nos. 1 - 4 and 6 if there are interested parties.
Complete Nos. 1, 2, 3, 5, and 6 if there are no interested parties.

1 Name of business entity filing form, and the city, state and country of the business entity's place of business.

2 Name of governmental entity or state agency that is a party to the contract for which the form is being filed.

3 Provide the identification number used by the governmental entity or state agency to track or identify the contract, and provide a description of the services, goods, or other property to be provided under the contract.

| 4 Name of Interested Party | City, State, Country (place of business) | Nature of Interest (check applicable) | |
|---|---|---|---|
| | | Controlling | Intermediary |
| | | | |
| | | | |
| | | | |
| | | | |
| | | | |
| | | | |
| | | | |

5 Check only if there is NO Interested Party. ☐

6 UNSWORN DECLARATION

My name is _____, and my date of birth is _____.

My address is _____, _____, _____, _____, _____.
(street) (city) (state) (zip code) (country)

I declare under penalty of perjury that the foregoing is true and correct.

Executed in _____ County, State of _____, on the _____ day of _____, 20_____.
(month) (year)

_____
Signature of authorized agent of contracting business entity
(Declarant)

ADD ADDITIONAL PAGES AS NECESSARY

Form provided by Texas Ethics Commission www.ethics.state.tx.us Revised 12/22/2017

Must file online at www.ethics.state.tx.us/File

## ATTACHMENT K: BIDDER'S CERTIFICATION

In accordance with Texas Government Code Sections 2252.001 through 2252.004 (relating to bids by nonresident contractors), the pertinent portion of the Act has been extracted and is as follows:

1. "Nonresident bidder" refers to a person who is not a resident.
2. "Resident bidder" refers to a person whose principal place of business is in this state, including a contractor whose ultimate parent company or majority owner has its principal place of business in this state.

A governmental entity may not award a governmental contract to a nonresident bidder unless the nonresident underbids the lowest bid submitted by a responsible resident bidder by an amount that is not less than the greater of the following:

1. the amount by which a resident bidder would be required to underbid the nonresident bidder to obtain a comparable contract in the state in which the nonresident's principal place of business is located; or
2. the amount by which a resident bidder would be required to underbid the nonresident bidder to obtain a comparable contract in the state in which a majority of the manufacturing relating to the contract will be performed.

I certify that _____ (Company Name) is a

☐ **Resident bidder of Texas** as defined in Section 2252.001(4), Texas Government Code,

**OR**

☐ **Nonresident bidder** as defined in Section 2252.001(3), Texas Government Code, and our principal place of business is located at _____ (City and State).

**Note: If the Respondent is an out-of-state company, a Certificate of Authority from the Secretary of State to do business in Texas must be provided.**

| | |
|---|---|
| **SIGNATURE** | |
| **NAME OF AUTHORIZED AGENT** | |
| **TITLE OF AUTHORIZED AGENT** | |
| **DATE** | |

## NON-COLLUSION AFFIDAVIT

STATE OF TEXAS §
§
COUNTY OF _____ §

By the signature below, the signatory for the bidder certifies that neither he/she nor the firm, corporation, partnership or institution represented by the signatory or anyone acting for the firm bidding this project has violated the antitrust laws of this State, codified at Section 15.01, *et seq.*, Texas Business and Commerce Code, or the Federal antitrust laws, nor communicated directly or indirectly the bid made to any competitor or any other person engaged in the same line of business, nor has the signatory or anyone acting for the firm, corporation or institution submitting a bid committed any other act of collusion related to the development and submission of this bid proposal.

Signature: _____

Printed Name: _____

Title: _____

Company: _____

Date: _____

SUBSCRIBED and sworn to before me the undersigned authority by _____ on the _____ day of _____, 20_____ on behalf of said bidder.

_____
Notary Public in and for the
State of Texas

My commission expires: _____

# APPENDIX I – SAMPLE CONTRACT

## SAMPLE CONTRACT – INVITATION FOR BID NON-CONSTRUCTION ONLY

**CITY OF LA MARQUE**
**AMERICAN RESCUE PLAN ACT (ARPA) PROGRAM**
**GENERAL SERVICES, SUPPLIES, AND/OR EQUIPMENT CONTRACT**

| | |
|---|---|
| **Vendor Name** | Vendor Name |
| **Vendor Unique Entity Identifier (UEI) if available** | XXXXXXXXXXXX |
| **Period of Performance Start Date** | |
| **Period of Performance End Date** | |
| **Amount of Federal Funds Obligated by this Agreement** | $000,000 |
| **Assisted Listing Number (ALN) #** 21.027 | **FAIN #** |

**INTRODUCTION**

THIS CONTRACT for General Services, Supplies, and/or Equipment ("Contract") is made and entered into this [Date], by and between [City of La Marque], Texas, hereinafter referred to as the "Entity" and [Vendor Name], hereinafter referred to as the "Vendor." Entity and Vendor are sometimes each referred to as a "Party" and collectively "Parties."

The following recitals are incorporated in and made a part of this Contract.

WHEREAS, on March 11, 2021, President Biden signed the U.S. Senate-amended H.R. 1319 (P.L. 117-2) known as the American Rescue Plan Act (hereinafter "ARPA"); and

WHEREAS, under ARPA Section 603 (c)(1)(A) and (3) and the Final Rule 31 CFR 35.6, recipients may use Coronavirus State and Local Fiscal Recovery Funds ("SLFRF") to allocate funds for the provision of government services and/or make necessary investments in water, sewer, and broadband infrastructure; and

WHEREAS, the Entity has determined that it has the objective of providing services to its residents; and

WHEREAS, the Entity has been awarded ARPA funds by the U.S. Department of the Treasury ("Treasury") which have been distributed to the Entity from ARPA for covered costs and eligible expenses to be incurred during the period which began on March 3, 2021 (the date ARPA became law) until December 31, 2024 (to be fully expended by December 31, 2026); and

WHEREAS, the Entity desires to disburse funds to the Vendor to perform certain services or provide certain supplies or equipment in connection therewith as set forth in this Contract and in the Scope of Services attached hereto; and

WHEREAS, Vendor has represented to the Entity that it is duly qualified, eligible, and willing to provide the services identified herein and in the Scope of Services attached hereto.

NOW, THEREFORE, in consideration of the foregoing recitals and the terms and conditions set forth herein, the Parties hereto do mutually agree as follows:

## SECTION 1. CONTRACT ADMINISTRATION

### SECTION 1.1 CONTACT INFORMATION & NOTICES

For the purposes of this Contract, the Entity's Representative listed below will serve as the primary point of contact for the Vendor. All required reports and communication shall be directed to this liaison and other local personnel as appropriate. The Vendor shall designate a Representative to act on Vendor's behalf for all purposes, including execution of Change Orders and Requests for Payment.

Any notice or communication required or permitted to be given under this Contract must be in writing. The initial contact information of the parties, which one party may change by giving written notice to the other party, are as follows:

| | | | |
|---|---|---|---|
| **Entity Name** | City of La Marque | **Vendor Name** | |
| **Entity Address 1** | 1111 Bayou Road | **Vendor Address 1** | |
| **Entity Address 2** | La Marque, Texas 77568 | **Vendor Address 2** | |
| | | | |
| **Entity Representative for Project** | | **Vendor Representative for Project** | |
| **Name** | Amanda Hobby | **Name** | |
| **Title** | Assistant Director of Public Works | **Title** | |
| **Phone** | (409) 795-7996 | **Phone** | |
| **Email** | a.hobby@cityoflamarque.org | **Email** | |
| **Entity Billing Contact** | | **Vendor Billing Contact** | |
| **Name** | Gina Galicia | **Name** | |
| **Title** | Accounts Payable Clerk | **Title** | |
| **Phone** | (409) 938-9214 | **Phone** | |
| **Email** | g.galicia@cityoflamarque.org | **Email** | |

## SECTION 1.2 PARTS INCORPORATED

Parts Incorporated. In addition to the Exhibits identified below which are incorporated into this Contract, it is understood and agreed that additional terms of this Contract are to be performed in accordance with the proposal documents (scope of work, images, and specifications), submitted proposal response and related exhibits, affidavits, addendums, statutory requirements, and the ARPA Terms & Conditions.

Exhibits

| | |
|---|---|
| Exhibit A1 | Scope of Work |
| Exhibit A2 | Payment & Pricing Schedule |
| Exhibit A3 | Request for Payment |
| Exhibit B | ARPA Required Contract Provisions |
| Exhibit C | Other Relevant Information/Special Conditions for Construction |
| Exhibit D | Insurance Certificate |
| Exhibit E | Bid, Performance, and Payment Bonds |
| Exhibit F | Eligibility Verification (SAM.gov) |
| Exhibit G | Certificate of Interested Parties (Form 1295) |

## SECTION 1.4 CONTRACT DOCUMENTS

By reference, the Contract Documents consist of:

a. This Contract and all exhibits listed, contained, or referenced in this Contract.

b. All Addenda issued before the Effective Date of this Contract;

c. All Alternates accepted by the Entity before the Effective Date of this Contract;

d. All Change Orders issued after the Effective Date of this Contract; and

e. The response submitted by Vendor in response to the IFB issued by Entity for this Project.

The Contract and Exhibit Documents form the entire and integrated Contract between Entity and Vendor, and supersede all prior negotiations, representations, or agreements, written or oral. To the extent of any conflict between Vendor's Proposal and any other Contract Document, the Contract Documents shall govern.

If there is an irreconcilable difference between or among the various documents that make up the Contract Documents, the interpretation that provides for a higher quality of material and/or workmanship will prevail over all other interpretations.

### 1.4.1 Term of Contract and Delivery Schedule – Commencement of Work

Entity shall issue a Notice to Proceed (NTP) identifying the date for commencement of the Work. Vendor shall achieve substantial completion of the Work within 90 calendar days after the commencement date; as such completion date may be extended by approved Change Orders. THE TIME SET FOR COMPLETION OF THE WORK IS AN ESSENTIAL ELEMENT OF THE CONTRACT. In any event, all of the services required and performed hereunder shall be completed no later than December 31, 2024.

### 1.4.2 Pre-Existing Conditions

Vendor acknowledges that it has been provided access to the existing improvements and conditions on the Project site and that it has thoroughly investigated those conditions. Vendor's investigation was instrumental in preparing its bid to perform the Work. Vendor shall not make or be entitled to any adjustment to the Contract Time or the Contract Sum arising from Project conditions that the Vendor discovered or, in the exercise of reasonable care, should have discovered

in Vendor's investigation.

### 1.4.3 Liquidated Damages

Vendor and Entity agree that a breach of this Contract as to completion time will cause damage to the Entity, but further agree that such damage cannot be accurately measured. Therefore, the Parties agree that $100.00 shall be subtracted from the Contract amount for each and every calendar day that the Work or any portion of the Work remains uncompleted after the expiration of the time period specified in the Notice to Proceed, or as extended by a change order.

### 1.4.4 Dispute Resolution

Disputes arising under the Contract shall be submitted to a process of resolution pursuant to alternative dispute resolution practices, such as mediation, binding arbitration, or non-binding arbitration pursuant to industry standards, prior to being submitted to a court for adjudication. It is understood that the Entity shall have the right to request mediation if services being provided are deemed deficient in any way.

### 1.4.5 Acquisition, Merger, Sale and/or Transfer of Business, etc.

It is understood by all parties that if, during the life of the Contract, the Vendor disposes of his/her business concern by acquisition, merger, sale, and or/transfer or by any means conveys his/her interest(s) to another party, all obligations are transferred to that new party. In this event, the new vendor will be required to submit all documentation/legal instruments that were required in the original bid/contract. Any change shall be approved by the Entity, who retains the right to reject the transfer of the contract.

### 1.4.6 Termination of Contract For Cause

This Contract may be terminated by the Entity for cause, including any nonperformance by the Vendor; failure of the Vendor to fulfill in a timely and proper manner its obligations under this Contract; or violation of any of the covenants, agreements, or stipulations of the Contract, upon thirty (30) days' written notice to Vendor including a statement of the reasons, therefore. The determination of the Entity as to the cause of termination and the appropriateness thereof shall be final and binding upon both Entity and Vendor. Cause for termination shall include any material failure by Vendor to comply with any terms of this Contract.

a. In such event, all finished or unfinished services, documents, data, maps, studies, surveys, drawings, models, photographs, and reports prepared by the Vendor under this Contract shall, at the option of the Entity, become its property, and the Vendor shall be entitled to receive just and equitable compensation for any work satisfactorily completed hereunder.

b. Notwithstanding the above, the Vendor shall not be relieved of liability to the Entity for damages sustained by the Entity by virtue of any breach of this Contract by the Vendor, and the Entity may withhold any payments to the Vendor for the purposes of set-off until such time as the exact amount of damages due the Entity from the Vendor is determined.

c. The Vendor agrees to indemnify and hold the Entity harmless from any liability to subcontractors or suppliers concerning payment for work performed or goods supplied arising out of the lawful termination of the Contract by the Entity under this provision.

d. In case of default by the Vendor, the Entity may procure the goods or services from other sources and hold the Vendor responsible for any excess cost.

e. Continuation of the terms of the Contract beyond the fiscal year is contingent on availability of funds in the following year's budget. In the event of unavailability of such funds, the Entity reserves the right to cancel the Contract.

f. If this Contract is terminated for cause, excluding funding discontinuance or disapproval, Vendor shall have the right to attempt to cure its failure during the thirty (30) day period prior to termination to the satisfaction of the Entity at the Entity's sole discretion.

### 1.4.7 Termination of Contract For Convenience of the Entity

The Entity may terminate this Contract at any time by giving at least thirty (30) days' notice in writing to the Vendor. If the Vendor is terminated by the Entity as provided herein, the Vendor will be paid for actual services provided or delivered purchases that are determined acceptable at the sole discretion of the Entity, less payments of compensation previously made. Vendor

### 1.4.8 Post Expiration and Termination Procedures

Upon expiration or in the event of a prior termination, all remaining and unspent ARPA funds, shall immediately become the sole and separate property of the Entity and the Vendor shall perform all acts and execute all instruments necessary to transfer and assign such funds to the Entity. All finished or unfinished documents, data, studies, reports, and work products prepared by the Vendor under this Contract or with grant funds shall, at the option of the Entity, become Entity's property.

### 1.4.9 Transitional Period

In the event services are terminated by contract expiration or by voluntary termination by either the Vendor or the Entity, the Vendor shall continue all terms and conditions of said Contract for a period not to exceed thirty (30) days at the Entity's request.

### 1.4.10 Ownership of Material

The Entity shall retain all of its rights and interest in any and all documents and property, both hard copy and digital furnished by the Entity to the Vendor for the purpose of assisting the Vendor in the performance of this Contract. All such items shall be returned immediately to the Entity at the expiration or termination of the Contract or completion of any related services pursuant thereto, whichever comes first. None of the documents and/or property shall, without the written consent of the Entity, be disclosed to others or used by the Vendor or permitted by the Vendor to be used by their parties at any time except in the performance of the resulting Contract. Ownership of all data, materials and documentation originated and prepared for the Entity pursuant to this Contract shall belong exclusively to the Entity. All data, reports, computerized information, programs, and materials related to this Project shall be delivered to and become the property of the Entity upon completion of the Project. The Vendor shall not have the right to use, sell, or disclose the total of the interim or final work products, or make available to third parties, without the prior written consent of the Entity.

## SECTION 1.5 CONTRACT SUM AND PAYMENTS

The Vendor shall be compensated per the schedule below. Payment to the Vendor shall be based on satisfactory completion of identified services and/or deliverables and payment/invoicing terms as stated in the IFB, or as mutually agreed upon and contained in this Contract. Payment is expressly contingent upon the availability of ARPA funding.

### 1.5.1 Contract Sum

Entity shall pay Vendor for performance of its obligations under this Contract, including the Base Proposal and Alternate Proposals (if any), the sum of [Spelled out dollar amount here] ($000,000.00), and make payment in accordance with the provisions of this Section.

### 1.5.2 Payment & Pricing Schedule

A Payment & Pricing Schedule (see **Exhibit A2**) subdividing the Project into its respective parts (f needed), and which includes values for all items comprising the Project will serve as the basis for payments made to Vendor.

### 1.5.3 Vendor's Payment Obligations

Vendor shall promptly pay all bills for labor and material performed and furnished by others in connection with this Contract.

a. Firm shall submit an invoice upon completion of each milestone. Deliverables will be considered complete only upon inspection and written acceptance by the Entity. Each invoice shall include deliverable(s) completed and

the price for each. **The final request for reimbursement must be received by City/County no later than September 30, 2026.**

### 1.5.4 Request for Payment

As instructed, all payment requests must be submitted on the Request for Payment (See **Exhibit A3**) including required attachments. Notwithstanding the certification of Vendor's payment requests, the Entity or its Representative will independently review Vendor's payment requests and make a determination as to the amount properly payable to Vendor.

### 1.5.5 Offsets; Deductions; Withholding

a. Entity is an agency of the State of Texas and materials and services utilized in the provision of services or purchases may be exempt from state and local taxes. Vendor is responsible for taking full advantage of all tax exemptions applicable to the Project. Entity will deduct from the Requests for Payment and from the Request for Final Payment any taxes paid for materials or services that were entitled to tax exemption.

b. Amounts assessed as liquidated damages per the above Section of this Contract and other amounts to which Entity is entitled by way of setoff or recovery, if any, shall be deducted from any amounts due Vendor.

c. Notwithstanding any other contractual provision to the contrary, Entity may withhold any payment from Vendor to the extent reasonably required to protect Entity interests under any of the following circumstances: failure to perform work in accordance with Contract Documents; insufficient documentation in Application for Payment; failure to pay subcontractors, employees, hired laborers or materials suppliers; failure to obtain, renew or maintain insurance coverage as required in this Contract; failure to meet schedule requirements or other scenarios that causes the Entity, in good faith judgment, to determine that the remaining balance will not be sufficient to complete the Work in accordance with this Contract. The right to withhold payment is contingent on giving Vendor a minimum of seven (7) calendar days' written notice of specific defects or defaults and an opportunity to cure same, and on Vendor's failure to cure or to take diligent steps to cure within such seven (7) calendar days.

### 1.5.6 Final Payment

Vendor's request for Final Payment must not be made until all Work is completed, all requirements of the Vendor Documents have been satisfied, and Vendor delivers the services or equipment.

## SECTION 2. ENTITY RESPONSIBILITIES

**SECTION 2.1 GENERAL**

a. Entity will cooperate in a timely manner in providing information regarding its requirements.

b. Entity will review and provide final approval of the general schedule, setting the plan for milestone dates and completion or delivery.

c. If the Entity has actual knowledge of any fault or defect or non-conformance with the Specifications, the Entity shall give prompt written notice of such fault, defect, or non-conformance to Vendor.

d. The Entity may designate one or more inspectors of its own who will be given access to the Work as requested or needed. The provision of such inspectors will not reduce or lessen in any respect Vendor's responsibilities for the Work.

e. The Entity may furnish or obtain all legal, accounting, auditing, and insurance counseling services for itself as may be necessary for the Project.

## SECTION 3. SCOPE OF WORK

### SECTION 3.1 GENERAL

Vendor has overall responsibility for and shall furnish all materials, equipment, tools, and labor necessary and reasonably inferable to complete the Work, or any phase of the Work, in accordance with Entity's requirements and the terms of the Contract Documents, including the Drawings, Specifications, Addenda, details, and other documents prepared by Vendor and listed in the attached Exhibits, if applicable.

Vendor's duties as set forth herein shall at no time be in any way diminished by reason of any approval by the Entity nor shall Vendor be released from any liability by reason of such approval by Entity, it being understood that Entity at all times is ultimately relying upon Vendor's skill and knowledge in performing the services required hereunder.

### SECTION 3.2 PROJECT CONTROL

Vendor shall supervise and direct the Work and shall be solely responsible for means, methods, techniques, sequences, and procedures for the Work. Vendor shall promptly correct any defective or non-conforming Work at Vendor's sole expense and without cost to Entity.

### SECTION 3.3 SUBVENDORS

Vendor shall award and enter into all Subcontracts necessary and appropriate to provide all labor and materials for the scope of work.

a. Vendor shall monitor the Work of the Subcontractors as required and coordinate such Work with a goal to attain Substantial Completion not later than the date for Substantial Completion and at a cost not to exceed the Contract Sum.

b. Upon request, Vendor shall provide Entity with complete, unaltered copies of all Subcontracts, and all amendments thereto.

### SECTION 3.4 HUB SUBCONTRACTING PLAN

Vendor shall comply with the requirements of the HUB Subcontracting Plan and shall not make any changes to the HUB Subcontracting Plan without Entity's written approval.

### SECTION 3.5 KEY TASKS

a. Provide services and purchase of equipment in accordance with delivery schedules and other prescribed timelines herein.

b. Provide a warranty on all purchased equipment.

c. Provide excellent customer service. Firm shall be responsive to requests and communicate on a regular basis with the Entity.

d. Provide and maintain all original and copies of supporting documentation.

e. Furnish progress reporting as determined or requested by the Entity.

f. Support and assist the Entity during state/federal monitoring or auditing activities, including providing financial information, reports, and other requests that may be required.

### SECTION 3.6 SCHEDULING

Vendor is solely responsible for delivery of the services/equipment in accordance with the Contract Documents on or before the date specified in the Schedule.

### SECTION 3.7 NON-CONFORMING WORK

Entity may reject any defective or non-conforming Work on the Project of which Entity becomes aware and Vendor shall promptly correct any such defect at Vendor's own cost without increasing the Contract Sum. Upon discovering that any portion of the Work does not conform with Entity's design concept and/or requirements, including the Design Guidelines and Standard Specifications, due to an error or omission in any Construction Document materials prepared or furnished by or on behalf of Vendor, Vendor shall promptly correct such condition at no additional cost to Entity. If Vendor refuses or fails to correct (or improperly corrects) any such condition within a reasonable time after notice, Entity may cause the condition to be corrected and offset the cost of such correction against any monies owed to Vendor; provided, however, if no monies are owed Vendor at the time the condition is discovered or at the time the condition is corrected by Entity, Vendor shall promptly reimburse the Entity for all expenses incurred to correct the condition. Vendor shall warranty all corrective Work, whether performed by or through Vendor or by a third party retained by Entity in accordance with the immediately preceding sentence due to Vendor's refusal or failure to correct properly any non-conforming Work.

## SECTION 3.8 INDEMNIFICATION

Vendor covenants and agrees to indemnify, hold harmless and defend, at its own sole expense, the Entity and its officers, agents, servants, and employees from and against any and all claims or suits for property loss or damage and/or personal injury, including death, to any and all persons, of whatsoever kind or character, whether real or asserted, arising out of or in connection with the execution, performance, attempted performance, or nonperformance of the services under this Contract and/or the operations, activities, and services of the activities described herein; and Vendor hereby assumes all liability and responsibility of the entity and its officers, agents, servants, and employees for any and all claims or suits for property loss or damage and/or personal injury, including death, to any and all persons, of whatsoever kinds or character, whether real or asserted, arising out of or in connection with the execution, performance, attempted performance, or nonperformance of the services or this Contract and/or the operations, activities, and services described herein. Vendor likewise covenants and agrees to and does hereby indemnify and hold harmless entity from and against any and all injury, damage, or destruction of property of entity, arising out of or in connection with all acts or omissions of Vendor, its officers, members, agents, employees, contractors, subcontractors, invitees, licensees, and project participants. Vendor agrees to and shall release Entity, its agents, employees, officers, and legal representatives from all liability for injury, death, damage, or loss to persons or property sustained in connection with or incidental to performance of the services under this Contract.

Vendor shall require all of its contractors and subcontractors to include in its contracts and subcontracts a release and indemnity in favor of the Entity in substantially the same form as above. The indemnity and liability release provided for above shall not apply to any liability resulting from the sole negligence or fault of the Entity, its officers, agents, employees or separate Vendors, and in the event of joint and concurring negligence or fault of the Entity and Vendor, responsibility and indemnity, if any, shall be apportioned in accordance with the laws of the State of Texas, without waiving any governmental immunity available to the entity under Texas law and without waiving any defenses of the parties under Texas law.

The provisions of this section are solely for the benefit of the parties and are not intended to create or grant any rights, contractual or otherwise, to any other person or entity. This section survives termination or expiration of this Contract.

## SECTION 3.9 INSURANCE & BONDING

If applicable, Vendor shall provide Insurance and Bid, Performance, and Payment Bonds as prescribed by Entity in the Solicitation documentation and included here as **Exhibit D** and **Exhibit E**.

# SECTION 4. REQUIRED PROVISIONS

The Vendor shall comply with the following items:

## SECTION 4.1 TERMS AND CONDITIONS

The Vendor agrees to comply with the requirements of Section 503 of the American Rescue Plan Act (ARPA), regulations adopted by Treasury pursuant to Section 603(f) of the Act, and guidance issued by Treasury regarding the foregoing. Vendor also specifically agrees to comply with the ARPA Terms & Conditions attached to this Contract in **Exhibit B.**

**SECTION 4.2 DEBARMENT AND SUSPENSION**

Vendor has provided proof of registration, active/good standing, and non-debarment status in the System for Award Management. Should this status change, the Vendor must notify the Entity immediately.

**SECTION 4.3 ASSURANCES OF COMPLIANCE WITH TITLE VI**

The Vendor shall comply with Title VI of the Civil Rights Act of 1964, which prohibits recipients of federal financial assistance from excluding from a program or activity, denying benefits of, or otherwise discriminating against a person on the basis of race, color, or national origin (42 U.S.C. § 2000d et seq.), as implemented by the Department of the Treasury's Title VI regulations, 31 CFR Part 22, which are herein incorporated by reference and made a part of this contract. Title VI also includes protection to persons with "Limited English Proficiency" in any program or activity receiving federal financial assistance, 42 U.S.C. § 2000d et seq., as implemented by the Department of the Treasury's Title VI regulations, 31 CFR Part 22, and herein incorporated by reference and made a part of this contract.

**SECTION 4.4 LOBBYING CERTIFICATION & DISCLOSURE**

No Federal appropriated funds have been paid or will be paid, by or on behalf of the undersigned, to any person for influencing or attempting to influence an officer or employee of an agency, a Member of Congress, an officer or employee of Congress, or an employee of a Member of Congress in connection with the awarding of any Federal contract, the making of any Federal grant, the making of any Federal loan, the entering into of any cooperative agreement, and the extension, continuation, renewal, amendment, or modification of any Federal contract, grant, loan, or cooperative agreement.

**SECTION 4.5 ETHICS MATTERS**

Vendor and its employees, agents, representatives, and subcontractors have ready and understand the Entity's Conflict of Interest Policy, State of Texas Standards of Conduct and Conflict of Interest Provisions available at Government Code Chapter 572: Personal Financial Disclosure, Standards of Conduct, and Conflict of Interest (state.tx.us), and applicable state ethics laws and rules available. Neither Vendor nor its employees, agents, representatives, or subcontractors will assist or cause Entity employees to violate the Conflict of Interest policies, provisions described by State of Texas Standards of Conduct and Conflict of Interest Provisions, or applicable state ethics laws or rules.

**SECTION 4.6 MAINTENANCE AND ACCESS TO RECORDS**

The Vendor shall maintain records and financial documents sufficient to evidence in compliance with Section 603(c) of the Act, Treasury's regulations implementing that section, and guidance issued by Treasury regarding the foregoing.

The Treasury Office of Inspector General, the Government Accountability Office and the Texas Office of the State Comptroller, or their authorized representatives, shall have the right of access to records (electronic and otherwise) of the Vendor in order to conduct audits or other investigations and all records shall be made available upon request. Records shall be maintained by the Vendor for a period of five (5) years after all funds have been expended or returned to the Treasury, whichever is later.

## SECTION 5. MISCELLANEOUS PROVISIONS

**SECTION 5.1 GENERAL**

a. In any case one or more of the provisions contained in this Contract shall for any reason be held to be invalid, illegal, or unenforceable in any respect, such invalidity, illegality, or unenforceability shall not affect any other provision thereof and this Contract shall be construed as if such invalid, illegal, or unenforceable provision had never been contained herein.

b. If any action at law or in equity is necessary to enforce or interpret the terms of this Contract, the prevailing party shall be entitled to reasonable attorney's fees, costs, and necessary disbursements in addition to any other relief to which such party may be entitled.

c. This Contract may be amended by mutual agreement of the parties hereto and a writing to be attached to be

incorporated into this Contract.

d. Licenses, Permits, Taxes, Fees, Laws, and Regulations

   i. Vendor warrants that it will obtain, maintain in effect, and pay the cost for all licenses, permits, or certifications that may be necessary for Vendor's performance of this Contract.

   ii. Vendor will be responsible for the payment of all taxes, excises, fees, payroll deductions, employee benefits (if any), fines, penalties or other payments required by federal, state, or local law or regulation in connection with Vendor's performance of this Contract.

   iii. Vendor will comply with and will be responsible for requiring its officers and employees to comply with all applicable federal, state, and local laws and regulations, and the rules and regulations of the Entity.

## SECTION 5.2 CAPACITY TO PERFORM

By execution of this Contract, Vendor is certifying that they have the capacity to perform and complete the Scope of Work as provided.

## SECTION 5.3 LIMITATION OF LIABILITY

Except for the obligation of Entity to pay Vendor certain fees, costs, and expenses to the extent expressly set forth in this Contract, the Entity shall have no liability to Vendor or to anyone claiming through or under Vendor by reason of the execution or performance of this Contract. Notwithstanding any obligation or liability of Entity to Vendor, no present or future partner or affiliate of the Entity or any agent, officer, director, or employee of the Entity or anyone claiming under the Entity, has or shall have any personal liability to Vendor or to anyone claiming through or under Vendor by reason of the execution or performance of this Contract.

## SECTION 5.4 ASSIGNMENT

This Contract is a personal service contract for the services of Vendor, and neither Vendor's interest in this Contract (including, but not limited to Vendor's fees due hereunder), nor Vendor's duties hereunder may be assigned or delegated to a third party except as specifically set forth in this Contract.

## SECTION 5.5 GOVERNING LAW AND VENUE

The Vendor agrees to comply with the requirements of Section 603 of the Act, regulations adopted by Treasury pursuant to Section 603(f) of the Act, and guidance issued by Treasury regarding the foregoing.

Additionally, all applicable local government codes for the State of Texas also apply to this Contract. All equipment, supplies, and work furnished under this Contract shall comply with applicable laws, ordinances, and regulations. Vendor shall obtain and pay for such permits and inspections as are required for the legal performance of this work, unless otherwise specified. Vendor shall comply with all federal and state laws and Entity's Ordinances and Codes applicable to the Vendor's operation under this Contract. These Specifications and the Contract resulting here from shall be fully governed by the laws of the State of Texas and shall be fully performable in La Marque (Entity Name), Texas, where venue for any proceeding arising hereunder will lie.

This Contract will be governed by the laws of the State of Texas without reference to its conflicts of law provisions. Venue for any suits arising from this Contract will be in a court of competent jurisdiction in Galveston County, Texas.

## SECTION 5.6 WAIVERS

No delay or omission by either Party in exercising any right or power accruing upon the non-compliance or failure of performance by the other Party of any provision of this Contract or the Contract Documents will impair any such right or power or be construed to be a waiver thereof. A waiver by either Party of any of the covenants, conditions, or agreements of this Contract or any of the Contract Documents to be performed by the other party will not be construed to be a waiver of any subsequent breach of this Contract or the Contract Documents or of any other covenant, condition or agreement contained in this Contract or the Contract Documents.

## SECTION 5.7 SEVERABILITY

If any provision of this Contract is for any reason be held invalid or unenforceable in any respect, such invalidity or unenforceability shall not affect any other provision of this Contract and this Contract will be construed as if such invalid or unenforceable provision had not been included herein.

**SECTION 5.8 NEW LAWS**

Parties agree that if there is a change in any laws, rules, or regulations affecting the performance related to this Contract and enacted after the Effective Date of this Contract, the Parties will enter into good faith negotiations to renegotiate the affected terms of this Contract.

BY: _____
(Entity Official)

_____
(Printed Name)

_____
(Title)

_____
(Date)

BY: _____
(Vendor's Authorized Representative)

_____
(Printed Name)

_____
(Title)

_____
(Date)

## SECTION 6. EXHIBITS

**THE FOLLOWING DOCUMENTS MUST BE COMPLETED AND ATTACHED TO THE CONTRACT:**

| | |
|---|---|
| Exhibit A1 | Scope of Work |
| Exhibit A2 | Payment & Pricing Schedule |
| Exhibit A3 | Request for Payment |
| Exhibit B | ARPA Required Provisions (ARPA Terms & Conditions) |
| Exhibit C | Other Relevant Information |
| Exhibit D | Insurance Certificate (if applicable) |
| Exhibit E | Bid, Performance, and Payment Bonds (if applicable) |
| Exhibit F | Eligibility Verification (SAM.gov) |
| Exhibit G | Certificate of Interested Parties (Form 1295) |

## Exhibit A1 – Scope of Work

To be populated with solicitation Scope of Work

## Exhibit A2 – Payment & Pricing Schedule

The terms for payment for the contract are as follows:

**Payment Schedule:**

Payment will be made within 30 days of a Request for Payment and only after delivery of all services and/or purchases and acceptance by the Entity.

**Pricing Schedule:**

Prices for all goods and/or services shall be all inclusive.

Entity is an agency of the State of Texas and materials and services utilized in the provision of services or purchases may be exempt from state and local taxes. Vendor is responsible for taking full advantage of all tax exemptions applicable to the Project. Entity will deduct from the Requests for Payment and from the Request for Final Payment any taxes paid for materials or services that were entitled to tax exemption.

**Lump Sum Price:** Vendor shall provide pricing in the table below to complete the scope of services contained in **Exhibit A1**, Scope of Work, in accordance with the specifications contained in this document. Costs include all applicable services (i.e. labor, materials, profit, bonding, insurance, permitting, general conditions, and other costs) to provide a turnkey product.

(Note to Entity: Component pricing should be based on the identified components of the scope of work contained in **Exhibit A1**). An example is provided below:

| SCOPE OF WORK | PRICE |
|---|---|
| | $ |
| | $ |
| | $ |
| | $ |
| **TOTAL LUMP SUM PRICE (TOTAL OF ABOVE LINE ITEMS)** | **$** |

## Exhibit A3 – Request for Payment

| | | | |
|---|---|---|---|
| **Project Name:** | | | |
| **Vendor Name:** | | | |
| **Date of Request:** | | | |
| **Contact Name:** | | | |
| **Contact Phone:** | | **Contact Email:** | |

| Item for Payment | Description | Unit Cost or Percent Complete | # of Units | Total Amount |
|---|---|---|---|---|
| | | | | |
| | | | | |
| | | | | |
| **TOTAL** | | | | |

| X | Attachments |
|---|---|
| | |
| | |

| Submitted By | |
|---|---|
| **Name and Title** | |
| **Signature** | |

**CERTIFICATION:** I certify that this Request for Payment contains costs associated with the provision of services in accordance with the terms of the contract. I also certify that all required documentary evidence has been submitted along with the Request for Payment as instructed, including any documentation associated with requirement to pay prevailing wages.

By signing this Request for Payment, I certify to the best of my knowledge and belief that information provided in this Request is true, complete, and accurate. I am aware that any false, fictitious, or fraudulent information, or the omission of any material fact, may subject me to criminal, civil or administrative penalties for fraud, false statements, false claims or otherwise.

**WARNING**: Section 1001 of Title 18 U.S. code makes it a criminal offense to make willful, false statements or misrepresentation of any material fact involving the use of or obtain federal funds.

# Exhibit B – ARPA Required Provisions

2 CFR 200.327 Contract provisions. The Non-Federal entity's contracts should contain applicable provisions described in Appendix II to Part 200—Contract Provisions for Non-Federal Entity Contracts Under Federal Awards. The Non-Federal entity's contracts must contain the provisions described in Appendix II to Part 200—Contract Provisions for Non-Federal Entity Contracts Under Federal Awards, as applicable.

| THRESHOLD | PROVISION | CITATION | PROVISION APPLIES TO |
|---|---|---|---|
| | 2 CFR 200 Appendix II (A-L) | | |
| >$250,000 (Simplified Acquisition Threshold) | Contracts for more than the simplified acquisition threshold, which is the inflation adjusted amount determined by the Civilian Agency Acquisition Council and the Defense Acquisition Regulations Council (Councils) as authorized by 41 U.S.C. 1908, must address administrative, contractual, or legal remedies in instances where contractors violate or breach contract terms, and provide for such sanctions and penalties as appropriate. | 2 CFR 200<br>APPENDIX II (A) | Contractor RFP/IFB<br>Contractor RFQ<br>Subrecipients |
| >$10,000 | All contracts in excess of $10,000 must address termination for cause and for convenience by the Non-Federal entity including the manner by which it will be affected and the basis for settlement. | 2 CFR 200<br>APPENDIX II (B) | Contractor RFP/IFB<br>Contractor RFQ<br>Subrecipients |
| None | Equal Employment Opportunity. Except as otherwise provided under 41 CFR Part 60, all contracts that meet the definition of "federally assisted construction contract" in 41 CFR Part 60-1.3 must include the equal opportunity clause provided under 41 CFR 60-1.4(b), in accordance with Executive Order 11246, "Equal Employment Opportunity" (30 FR 12319, 12935, 3 CFR Part, 1964-1965 Comp., p. 339), as amended by Executive Order 11375, "Amending Executive Order 11246 Relating to Equal Employment Opportunity," and implementing regulations at 41 CFR part 60, "Office of Federal Contract Compliance Programs, Equal Employment Opportunity, Department of Labor."<br>41 CFR 60-1.4 Equal opportunity clause.<br>(b) Federally assisted construction contracts. (1) Except as otherwise provided, each administering agency shall require the inclusion of the following language as a condition of any grant, contract, loan, insurance, or guarantee involving federally assisted construction which is not exempt from the requirements of the equal opportunity clause:<br>The [recipient] hereby agrees that it will incorporate or cause to be incorporated into any contract for construction work, or modification thereof, as defined in the regulations of the Secretary of Labor at 41 CFR Chapter 60, which is paid for in whole or in part with funds obtained from the Federal Government or borrowed on the credit of the Federal Government pursuant to a grant, contract, loan, insurance, or guarantee, or undertaken pursuant to any Federal program involving such grant, contract, loan, insurance, or guarantee, the following equal opportunity clause:<br>During the performance of this contract, the contractor agrees as follows:<br>(9) The contractor will not discriminate against any employee or applicant for employment because of race, color, religion, sex, sexual orientation, gender identity, or national origin. The contractor will take affirmative action to ensure that applicants are employed, and that employees are treated during employment without regard to their race, color, religion, sex, sexual orientation, gender identity, or national origin. Such action shall include, but not be limited to the following:<br>Employment, upgrading, demotion, or transfer; recruitment or recruitment advertising; layoff or termination; rates of pay or other forms of compensation; and selection for training, including apprenticeship. The contractor agrees to post in conspicuous places, available to employees and applicants for employment, notices to be provided setting forth the provisions of this nondiscrimination clause.<br>(10) The contractor will, in all solicitations or advertisements for employees placed by | 2 CFR 200<br>APPENDIX II (C)<br>and<br>41 CFR §60-1.4(b) | Contractor RFP/IFB<br>Contractor RFQ<br>Subrecipients |

| THRESHOLD | PROVISION | CITATION | PROVISION APPLIES TO |
|---|---|---|---|
| | or on behalf of the contractor, state that all qualified applicants will receive consideration for employment without regard to race, color, religion, sex, sexual orientation, gender identity, or national origin.<br>(11) The contractor will not discharge or in any other manner discriminate against any employee or applicant for employment because such employee or applicant has inquired about, discussed, or disclosed the compensation of the employee or applicant or another employee or applicant. This provision shall not apply to instances in which an employee who has access to the compensation information of other employees or applicants as a part of such employee's essential job functions discloses the compensation of such other employees or applicants to individuals who do not otherwise have access to such information, unless such disclosure is in response to a formal complaint or charge, in furtherance of an investigation, proceeding, hearing, or action, including an investigation conducted by the employer, or is consistent with the contractor's legal duty to furnish information.<br>(12) The contractor will send to each labor union or representative of workers with which he has a collective bargaining agreement or other contract or understanding, a notice to be provided advising the said labor union or workers' representatives of the contractor's commitments under this section and shall post copies of the notice in conspicuous places available to employees and applicants for employment.<br>(13) The contractor will comply with all provisions of Executive Order 11246 of September 24, 1965, and of the rules, regulations, and relevant orders of the Secretary of Labor.<br>(14) The contractor will furnish all information and reports required by Executive Order 11246 of September 24, 1965, and by rules, regulations, and orders of the Secretary of Labor, or pursuant thereto, and will permit access to his books, records, and accounts by the administering agency and the Secretary of Labor for purposes of investigation to ascertain compliance with such rules, regulations, and orders.<br>(15) In the event of the contractor's noncompliance with the nondiscrimination clauses of this contract or with any of the said rules, regulations, or orders, this contract may be canceled, terminated, or suspended in whole or in part and the contractor may be declared ineligible for further Government contracts or federally assisted construction contracts in accordance with procedures authorized in Executive Order 11246 of September 24, 1965, and such other sanctions may be imposed and remedies invoked as provided in Executive Order 11246 of September 24, 1965, or by rule, regulation, or order of the Secretary of Labor, or as otherwise provided by law.<br>(16) The contractor will include the portion of the sentence immediately preceding paragraph (1) and the provisions of paragraphs (1) through (8) in every subcontract or purchase order unless exempted by rules, regulations, or orders of the Secretary of Labor issued pursuant to section 204 of Executive Order 11246 of September 24, 1965, so that such provisions will be binding upon each subcontractor or vendor. The contractor will take such action with respect to any subcontract or purchase order as the administering agency may direct as a means of enforcing such provisions, including sanctions for noncompliance:<br>Provided, however, that in the event a contractor becomes involved in, or is threatened with, litigation with a subcontractor or vendor as a result of such direction by the administering agency, the contractor may request the United States to enter into such litigation to protect the interests of the United States.<br>The [recipient] further agrees that it will be bound by the above equal opportunity clause with respect to its own employment practices when it participates in federally assisted construction work: Provided, that if the [recipient] so participating is a State or local government, the above equal opportunity clause is not applicable to any agency, instrumentality or subdivision of such government which does not participate in work on or under the contract.<br>The [recipient] agrees that it will assist and cooperate actively with the administering agency and the Secretary of Labor in obtaining the compliance of contractors and subcontractors with the equal opportunity clause and the rules, regulations, and | | |

| THRESHOLD | PROVISION | CITATION | PROVISION APPLIES TO |
|---|---|---|---|
| | relevant orders of the Secretary of Labor, that it will furnish the administering agency and the Secretary of Labor such information as they may require for the supervision of such compliance, and that it will otherwise assist the recipient agency in the discharge of the agency's primary responsibility for securing compliance.<br><br>The recipient further agrees that it will refrain from entering into any contract or contract modification subject to Executive Order 11246 of September 24, 1965, with a contractor debarred from, or who has not demonstrated eligibility for, Government contracts and federally assisted construction contracts pursuant to the Executive Order and will carry out such sanctions and penalties for violation of the equal opportunity clause as may be imposed upon contractors and subcontractors by the administering agency or the Secretary of Labor pursuant to Part II, Subpart D of the Executive Order. In addition, the [recipient] agrees that if it fails or refuses to comply with these undertakings, the administering agency may take any or all of the following actions: cancel, terminate, or suspend in whole or in part this grant (contract, loan, insurance, guarantee); refrain from extending any further assistance to the [recipient] under the program with respect to which the failure or refund occurred until satisfactory assurance of future compliance has been received from such [recipient]; and refer the case to the Department of Justice for appropriate legal proceedings. | | |
| >$10,000,000 for ARPA but State Provision Applies at any amount and/or<br><br>>$2,000 for CDBG/Braided Funds Projects<br><br>See TX Prevailing Wage Laws | Davis-Bacon Act, as amended (40 U.S.C. 3141-3148). When required by Federal program legislation, all prime construction contracts in excess of $10,000,00 awarded by Non-Federal entities must include a provision for compliance with the Davis-Bacon Act (40 U.S.C. 3141-3144, and 3146-3148) as supplemented by Department of Labor regulations (29 CFR Part 5, "Labor Standards Provisions Applicable to Contracts Covering Federally Financed and Assisted Construction"). In accordance with the statute, contractors must be required to pay wages to laborers and mechanics at a rate not less than the prevailing wages specified in a wage determination made by the Secretary of Labor. In addition, contractors must be required to pay wages not less than once a week. The Non-Federal entity must place a copy of the current prevailing wage determination issued by the Department of Labor in each solicitation. The decision to award a contract or subcontract must be conditioned upon the acceptance of the wage determination. The Non-Federal entity must report all suspected or reported violations to the Federal awarding agency.<br><br>The contracts must also include a provision for compliance with the Copeland "Anti-Kickback" Act (40 U.S.C. 3145), as supplemented by Department of Labor regulations (29 CFR Part 3, "Contractors and Subcontractors on Public Building or Public Work Financed in Whole or in Part by Loans or Grants from the United States"). The Act provides that each contractor or subrecipient must be prohibited from inducing, by any means, any person employed in the construction, completion, or repair of public work, to give up any part of the compensation to which he or she is otherwise entitled. The Non-Federal entity must report all suspected or reported violations to the Federal awarding agency. | 2 CFR 200 APPENDIX II (D) | Contractor RFP/IFB<br><br>Subrecipients |
| >$100,000 | Contract Work Hours and Safety Standards Act (40 U.S.C. 3701-3708). Where applicable, all contracts awarded by the Non-Federal entity in excess of $100,000 that involve the employment of mechanics or laborers must include a provision for compliance with 40 U.S.C. 3702 and 3704, as supplemented by Department of Labor regulations (29 CFR Part 5). Under 40 U.S.C. 3702 of the Act, each contractor must be required to compute the wages of every mechanic and laborer on the basis of a standard work week of 40 hours. Work in excess of the standard work week is permissible provided that the worker is compensated at a rate of not less than one and a half times the basic rate of pay for all hours worked in excess of 40 hours in the work week. The requirements of 40 U.S.C. 3704 are applicable to construction work and provide that no laborer or mechanic must be required to work in surroundings or under working conditions which are unsanitary, hazardous, or dangerous. These requirements do not apply to the purchases of supplies or materials or articles ordinarily available on the open market, or contracts for transportation or | 2 CFR 200 APPENDIX II (E) | Contractor RFP/IFB<br><br>Subrecipients |

| THRESHOLD | PROVISION | CITATION | PROVISION APPLIES TO |
|---|---|---|---|
| | transmission of intelligence. | | |
| None | Rights to Inventions Made Under a Contract or Agreement. If the Federal award meets the definition of "funding agreement" under 37 CFR § 401.2 (a) and the recipient or subrecipient wishes to enter into a contract with a small business firm or nonprofit organization regarding the substitution of parties, assignment or performance of experimental, developmental, or research work under that "funding agreement," the recipient or subrecipient must comply with the requirements of 37 CFR Part 401, "Rights to Inventions Made by Nonprofit Organizations and Small Business Firms Under Government Grants, Contracts and Cooperative Agreements," and any implementing regulations issued by the awarding agency. | 2 CFR 200 APPENDIX II (F) | Contractor RFP/IFB<br>Contractor RFQ<br>Subrecipients |
| >$150,000 | Clean Air Act (42 U.S.C. 7401-7671q.) and the Federal Water Pollution Control Act (33 U.S.C. 1251-1387), as amended – Contracts and subgrants of amounts in excess of $150,000 must contain a provision that requires the Non-Federal award to agree to comply with all applicable standards, orders or regulations issued pursuant to the Clean Air Act (42 U.S.C. 7401-7671q) and the Federal Water Pollution Control Act as amended (33 U.S.C. 1251-1387). Violations must be reported to the Federal awarding agency and the Regional Office of the Environmental Protection Agency (EPA). | 2 CFR 200 APPENDIX II (G) | Contractor RFP/IFB<br>Contractor RFQ<br>Subrecipients |
| >$25,000 | Debarment and Suspension (Executive Orders 12549 and 12689) – A contract award (see 2 CFR 180.220) must not be made to parties listed on the governmentwide exclusions in the System for Award Management (SAM), in accordance with the OMB guidelines at 2 CFR 180 that implement Executive Orders 12549 (3 CFR part 1986 Comp., p. 189) and 12689 (3 CFR part 1989 Comp., p. 235), "Debarment and Suspension." SAM Exclusions contains the names of parties debarred, suspended, or otherwise excluded by agencies, as well as parties declared ineligible under statutory or regulatory authority other than Executive Order 12549. | 2 CFR 200 APPENDIX II (H) | Contractor RFP/IFB<br>Contractor RFQ<br>Subrecipients<br>Vendors |
| >$100,000 | Byrd Anti-Lobbying Amendment (31 U.S.C. 1352) – Contractors that apply or bid for an award exceeding $100,000 must file the required certification. Each tier certifies to the tier above that it will not and has not used Federal appropriated funds to pay any person or organization for influencing or attempting to influence an officer or employee of any agency, a member of Congress, officer or employee of Congress, or an employee of a member of Congress in connection with obtaining any Federal contract, grant or any other award covered by 31 U.S.C. 1352. Each tier must also disclose any lobbying with Non-Federal funds that takes place in connection with obtaining any Federal award. Such disclosures are forwarded from tier to tier up to the Non-Federal award. | 2 CFR 200 APPENDIX II (I) and 24 CFR §570.303 | Contractor RFP/IFB<br>Contractor RFQ<br>Subrecipients |

| THRESHOLD | PROVISION | CITATION | PROVISION APPLIES TO |
|---|---|---|---|
| | See 2 CFR §200.323 - Procurement of Recovered Materials.<br><br>Where applicable, in the performance of contract, pursuant to 2 CFR 200.323, the contractor must comply with section 6002 of the Solid Waste Disposal Act, as amended by the Resource Conservation and Recovery Act. The requirements of Section 6002 include procuring only items designated in guidelines of the Environmental Protection Agency (EPA) at 40 CFR part 247 that contain the highest percentage of recovered materials practicable, consistent with maintaining a satisfactory level of competition, where the purchase price of the item exceeds $10,000 or the value of the quantity acquired during the preceding fiscal year exceeded $10,000; procuring solid waste management services in a manner that maximizes energy and resource recovery; and establishing an affirmative procurement program for procurement of recovered materials identified in the EPA guidelines.<br><br>To the extent that the scope of work or specifications in the contract requires the contractor to provide recovered materials the scope of work or specifications are modified to require that as follows.<br><br>ii. In the performance of this contract, the Contractor shall make maximum use of products containing recovered materials that are EPA-designated items unless the product cannot be acquired—<br>1. Competitively within a timeframe providing for compliance with the contract performance schedule;<br>2. Meeting contract performance requirements; or<br>3. At a reasonable price.<br>iv. Information about this requirement, along with the list of EPA-designated items, is available at EPA's Comprehensive Procurement Guidelines web site, https://www.epa.gov/smm/comprehensive-procurement-guideline-cpg-program.<br>v. The Contractor also agrees to comply with all other applicable requirements of Section 6002 of the "Solid Waste Disposal Act." | 2 CFR 200<br>APPENDIX II (J) | Contractor RFP/IFB<br>Contractor RFQ<br>Subrecipients |
| | See 2 CFR §200.216 - Prohibition on certain telecommunications and video surveillance services or equipment<br><br>(a) Recipients and subrecipients are prohibited from obligating or expending loan or grant funds to:<br>(1) Procure or obtain;<br>(2) Extend or renew a contract to procure or obtain; or<br>(3) Enter into a contract (or extend or renew a contract) to procure or obtain equipment, services, or systems that uses covered telecommunications equipment or services as a substantial or essential component of any system, or as critical technology as part of any system. As described in Public Law 115-232, section 889, covered telecommunications equipment is telecommunications equipment produced by Huawei Technologies Company or ZTE Corporation (or any subsidiary or affiliate of such entities).<br>(i) For the purpose of public safety, security of government facilities, physical security surveillance of critical infrastructure, and other national security purposes, video surveillance and telecommunications equipment produced by Hytera Communications Corporation, Hangzhou Hikvision Digital Technology Company, or Dahua Technology Company (or any subsidiary or affiliate of such entities).<br>(ii) Telecommunications or video surveillance services provided by such entities or using such equipment.<br>(iii) Telecommunications or video surveillance equipment or services produced or provided by an entity that the Secretary of Defense, in consultation with the Director of the National Intelligence or the Director of the Federal Bureau of Investigation, reasonably believes to be an entity owned or | 2 CFR 200<br>APPENDIX II (K) | Contractor RFP/IFB<br>Contractor RFQ<br>Subrecipients |

| THRESHOLD | PROVISION | CITATION | PROVISION APPLIES TO |
|---|---|---|---|
| | controlled by, or otherwise connected to, the government of a covered foreign country.<br>(b) In implementing the prohibition under Public Law 115-232, section 889, subsection (f), paragraph (1), heads of executive agencies administering loan, grant, or subsidy programs shall prioritize available funding and technical support to assist affected businesses, institutions and organizations as is reasonably necessary for those affected entities to transition from covered communications equipment and services, to procure replacement equipment and services, and to ensure that communications service to users and customers is sustained.<br>(c) See Public Law 115-232, section 889 for additional information.<br>(d) See also § 200.471. | | |
| | See 2 CFR §200.322 - Domestic Preferences for Procurements.<br><br>(a) As appropriate and to the extent consistent with law, the Non-Federal entity should, to the greatest extent practicable under a Federal award, provide a preference for the purchase, acquisition, or use of goods, products, or materials produced in the United States (including but not limited to iron, aluminum, steel, cement, and other manufactured products). The requirements of this section must be included in all subawards including all contracts and purchase orders for work or products under this award.<br><br>(b) For purposes of this section:<br>(1) "Produced in the United States" means, for iron and steel products, that all manufacturing processes, from the initial melting stage through the application of coatings, occurred in the United States.<br>(2) "Manufactured products" means items and construction materials composed in whole or in part of non-ferrous metals such as aluminum; plastics and polymer-based products such as polyvinyl chloride pipe; aggregates such as concrete; glass, including optical fiber; and lumber. | 2 CFR 200 APPENDIX II (L) | Contractor RFP/IFB<br>Contractor RFQ<br>Subrecipients |
| | **Additional 2 CFR 200 references & Other Regulations** | | |
| None | The Federal awarding agency must establish conflict of interest policies for Federal awards. The Non-Federal entity must disclose in writing any potential conflict of interest to the Federal awarding agency or pass-through entity in accordance with applicable Federal awarding agency policy. | 2 CFR 200.112 | Contractor RFP/IFB<br>Contractor RFQ<br>Subrecipients |
| None | Contracting with HUB, small and minority businesses, women's business enterprises, and labor surplus area firms.<br>(a) The Non-Federal entity must take all necessary affirmative steps to assure that minority businesses, women's business enterprises, and labor surplus area firms are used when possible.<br>(b) Affirmative steps must include:<br>(1) Placing qualified small and minority businesses and women's business enterprises on solicitation lists;<br>(2) Assuring that small and minority businesses, and women's business enterprises are solicited whenever they are potential sources;<br>(3) Dividing total requirements, when economically feasible, into smaller tasks or quantities to permit maximum participation by small and minority businesses, and women's business enterprises;<br>(4) Establishing delivery schedules, where the requirement permits, which | 2 CFR 200.321 | Contractor RFP/IFB<br>Contractor RFQ<br>Subrecipients |

| THRESHOLD | PROVISION | CITATION | PROVISION APPLIES TO |
|---|---|---|---|
| | encourage participation by small and minority businesses, and women's business enterprises;<br>(5) Using the services and assistance, as appropriate, of such organizations as the Small Business Administration and the Minority Business Development Agency of the Department of Commerce; and<br>(6) Requiring the prime contractor, if subcontracts are to be let, to take the affirmative steps listed in paragraphs (b)(1) through (5) of this section. | | |
| >$10,000 | An NFE (Non-Federal Entity) that is a state agency or an agency of a political subdivision of a state, and the NFE's contractors must comply with Section 6002 of the Solid Waste Disposal Act.<br>Applicable NFEs must include a contract provision requiring compliance with this requirement.<br>This includes contracts awarded by a state agency or political subdivision of a state and its contractors for certain items, as designated by the EPA, with a purchase price greater than $10,000.<br>Indian Tribal Governments and nonprofit organizations are not required to comply with this provision. Additional requirements are listed below. | 2 CFR 200.323 | Contractor RFP/IFB<br>Contractor RFQ<br>Subrecipients |
| None | Financial records, supporting documents, statistical records, and all other Non-Federal entity records pertinent to a Federal award must be retained for a period of three years from the date of submission of the final expenditure report or, for Federal awards that are renewed quarterly or annually, from the date of the submission of the quarterly or annual financial report, respectively, as reported to the Federal awarding agency or pass-through entity in the case of a subrecipient. Federal awarding agencies and pass-through entities must not impose any other record retention requirements upon Non-Federal entities. **All records related to ARPA shall be maintained for 5 years per the ARPA terms, conditions, and regulations.** The only exceptions are the following:<br>(a) If any litigation, claim, or audit is started before the expiration of the 3-year period, the records must be retained until all litigation, claims, or audit findings involving the records have been resolved and final action taken. **All records related to ARPA shall be maintained for 5 years per the ARPA terms, conditions, and regulations.**<br>(b) When the Non-Federal entity is notified in writing by the Federal awarding agency, cognizant agency for audit, oversight agency for audit, cognizant agency for indirect costs, or pass-through entity to extend the retention period.<br>(c) Records for real property and equipment acquired with Federal funds must be retained for 3 years after final disposition. All records related to ARPA shall be maintained for 5 years per the ARPA terms and conditions and regulations.<br>(d) When records are transferred to or maintained by the Federal awarding agency or pass-through entity, the 3-year retention requirement is not applicable to the Non-Federal entity All records related to ARPA shall be maintained for 5 years per the ARPA terms and conditions and regulations. **All records related to ARPA shall be maintained for 5 years per the ARPA terms, conditions, and regulations.**<br>(e) Records for program income transactions after the period of performance. In some cases, recipients must report program income after the period of performance. Where there is such a requirement, the retention period for the records pertaining to the earning of the program income starts from the end of the Non-Federal entity's fiscal year in which the program income is earned.<br>(f) Indirect cost rate proposals and cost allocations plans. This paragraph applies to the following types of documents and their supporting records: Indirect cost rate computations or proposals, cost allocation plans, and any similar accounting computations of the rate at which a particular group of costs is chargeable (such as computer usage chargeback rates or composite fringe benefit rates).<br>(1) *If submitted for negotiation.* If the proposal, plan, or other computation is | 2 CFR 200.334 | Contractor RFP/IFB<br>Contractor RFQ<br>Subrecipients<br>Vendors |

| THRESHOLD | PROVISION | CITATION | PROVISION APPLIES TO |
|---|---|---|---|
| | required to be submitted to the Federal Government (or to the pass-through entity) to form the basis for negotiation of the rate, then the 3-year retention period for its supporting records starts from the date of such submission. **All records related to ARPA shall be maintained for 5 years per the ARPA terms, conditions, and regulations.**<br>(2) *If not submitted for negotiation.* If the proposal, plan, or other computation is not required to be submitted to the Federal Government (or to the pass-through entity) for negotiation purposes, then the 3-year retention period for the proposal, plan, or computation and its supporting records starts from the end of the fiscal year (or other accounting period) covered by the proposal, plan, or other computation. **All records related to ARPA shall be maintained for 5 years per the ARPA terms, conditions, and regulations.** | | |
| None | The Federal awarding agency and the Non-Federal entity should, whenever practicable, collect, transmit, and store Federal award-related information in open and machine-readable formats rather than in closed formats or on paper in accordance with applicable legislative requirements. A machine-readable format is a format in a standard computer language (not English text) that can be read automatically by a web browser or computer system. The Federal awarding agency or pass-through entity must always provide or accept paper versions of Federal award-related information to and from the Non-Federal entity upon request. If paper copies are submitted, the Federal awarding agency or pass-through entity must not require more than an original and two copies. When original records are electronic and cannot be altered, there is no need to create and retain paper copies. When original records are paper, electronic versions may be substituted through the use of duplication or other forms of electronic media provided that they are subject to periodic quality control reviews, provide reasonable safeguards against alteration, and remain readable. | 2 CFR 200.336 | Contractor RFP/IFB<br>Contractor RFQ<br>Subrecipients |
| None | CONTRACTS WITH COMPANIES ENGAGED IN BUSINESS WITH IRAN, SUDAN, OR FOREIGN TERRORIST ORGANIZATION PROHIBITED. A governmental entity may not enter into a governmental contract with a company that is identified on a list prepared and maintained under Section 806.051, 807.051, or 2252.153. The term "foreign terrorist organization" in this paragraph has the meaning assigned to such a term in Section 2252.151(2) of the Texas Government Code. | Texas Government Code 2252.152 | Contractor RFP/IFB<br>Contractor RFQ<br>Subrecipients |
| >$100,000 | PROVISION REQUIRED IN CONTRACT.<br>(a) This section applies only to a contract that:<br>(1) is between a governmental entity and a company with 10 or more full-time employees; and<br>(2) has a value of $100,000 or more that is to be paid wholly or partly from public funds of the governmental entity.<br>(b) A governmental entity may not enter into a contract with a company for goods or services unless the contract contains a written verification from the company that it:<br>(1) does not boycott Israel; and<br>(2) will not boycott Israel during the term of the contract. | Texas Government Code 2271 | Contractor RFP/IFB<br>Contractor RFQ<br>Subrecipients<br>Vendors |
| For Critical Infrastructure Projects | PROHIBITION ON CONTRACTS WITH CERTAIN FOREIGN-OWNED COMPANIES IN CONNECTION WITH CRITICAL INFRASTRUCTURE.<br>PROHIBITED CONTRACTS.<br>(a) A governmental entity may not enter into a contract or other agreement relating to critical infrastructure in this state with a company:<br>(1) if, under the contract or other agreement, the company would be granted direct or remote access to or control of critical infrastructure in this state, excluding access specifically allowed by the governmental entity for product | Texas Government Code, Title 10, Subtitle F, Chapter 2274.0102 | Subrecipients<br>EC 6.1 Awardees |

| THRESHOLD | PROVISION | CITATION | PROVISION APPLIES TO |
|---|---|---|---|
| | warranty and support purposes; and<br>(2) if the governmental entity knows that the company is:<br>(A) owned by or the majority of stock or other ownership interest of the company is held or controlled by:<br>(i) individuals who are citizens of China, Iran, North Korea, Russia, or a designated country; or<br>(ii) a company or other entity, including a governmental entity, that is owned or controlled by citizens of or is directly controlled by the government of China, Iran, North Korea, Russia, or a designated country; or<br>(B) headquartered in China, Iran, North Korea, Russia, or a designated country.<br>(b) The prohibition described by Subsection (a) applies regardless of whether:<br>(1) the company's or its parent company's securities are publicly traded; or<br>(2) the company or its parent company is listed on a public stock exchange as:<br>(A) a Chinese, Iranian, North Korean, or Russian company; or<br>(B) a company of a designated country. | | |
| None | Mandatory standards and policies relating to energy efficiency which are contained in the state energy conservation plan issued in compliance with the Energy Policy and Conservation Act. | 42 U.S.C. 6201 | Contractor RFP/IFB<br>Subrecipients |
| None | The Firm agrees that no otherwise qualified individual with disabilities shall, solely by reason of his/her disability, be denied the benefits of, or be subjected to discrimination, including discrimination in employment, under any program or activity receiving federal financial assistance. | Section 504 of the Rehabilitation Act of 1973, as amended. | Subrecipients |
| | ARPA Terms & Conditions | | |
| ARPA Terms, Conditions, & Records | 1. Use of Funds.<br>a. Recipient understands and agrees that the funds disbursed under this award may only be used in compliance with section 603(c) of the Social Security Act (the Act), Treasury's regulations implementing that section, and guidance issued by Treasury regarding the foregoing.<br>b. Recipient will determine prior to engaging in any project using this assistance that it has the institutional, managerial, and financial capability to ensure proper planning, management, and completion of such project. | Section 9901 of the American Rescue Plan Act, Pub. L. No. 117-2;<br>Section 602(b), 603(b) and/or 603(c) as applicable | Subrecipients |
| ARPA Terms, Conditions, & Records | 2. Period of Performance. The period of performance for this award begins on the date hereof and ends on December 31, 2026. As set forth in Treasury's implementing regulations, Recipients may use award funds to cover eligible costs incurred during the period that begins on March 3, 2021, and ends on December 31, 2024. | Section 9901 of the American Rescue Plan Act, Pub. L. No. 117-2;<br>Section 602(b), 603(b) and/or 603(c) as applicable | Subrecipients |
| ARPA Terms, Conditions, & Records | 3. Reporting. Recipient agrees to comply with any reporting obligations established by Treasury as they relate to this award. | Section 9901 of the American Rescue Plan Act, Pub. L. No. 117-2;<br>Section 602(b), 603(b) and/or 603(c) as applicable | Subrecipients |

| THRESHOLD | PROVISION | CITATION | PROVISION APPLIES TO |
|---|---|---|---|
| ARPA Terms, Conditions, & Records | 4. Maintenance of and Access to Records<br>a. Recipient shall maintain records and financial documents sufficient to evidence compliance with section 603(c) of the Act, Treasury's regulations implementing that section, and guidance issued by Treasury regarding the foregoing.<br>b. The Treasury Office of Inspector General and the Government Accountability Office, or their authorized representatives, shall have the right of access to records (electronic and otherwise) of Recipient in order to conduct audits or other investigations.<br>c. Records shall be maintained by Recipient for a period of five (5) years after all funds have been expended or returned to Treasury, whichever is later. | Section 9901 of the American Rescue Plan Act, Pub. L. No. 117-2;<br>Section 602(b), 603(b) and/or 603(c) as applicable | Contractor RFP/IFB<br>Contractor RFQ<br>Subrecipients<br>Vendors |
| ARPA Terms, Conditions, & Records | 5. Pre-award Costs. Pre-award costs, as defined in 2 CFR § 200.458, may not be paid with funding from this award. | Section 9901 of the American Rescue Plan Act, Pub. L. No. 117-2;<br>Section 602(b), 603(b) and/or 603(c) as applicable | Subrecipients |
| ARPA Terms, Conditions, & Records | 6. Administrative Costs. Recipient may use funds provided under this award to cover both direct and indirect costs. | Section 9901 of the American Rescue Plan Act, Pub. L. No. 117-2;<br>Section 602(b), 603(b) and/or 603(c) as applicable | Subrecipients |
| ARPA Terms, Conditions, & Records | 7. Cost Sharing. Cost sharing or matching funds are not required to be provided by Recipient. | Section 9901 of the American Rescue Plan Act, Pub. L. No. 117-2;<br>Section 602(b), 603(b) and/or 603(c) as applicable | Subrecipients |
| ARPA Terms, Conditions, & Records | 8. Conflicts of Interest. Recipient understands and agrees it must maintain a conflict of interest policy consistent with 2 CFR § 200.318(c) and that such conflict of interest policy is applicable to each activity funded under this award. Recipient and subrecipients must disclose in writing to Treasury or the pass-through entity, as appropriate, any potential conflict of interest affecting the awarded funds in accordance with 2 CFR § 200.112. | Section 9901 of the American Rescue Plan Act, Pub. L. No. 117-2;<br>Section 602(b), 603(b) and/or 603(c) as applicable | Contractor RFP/IFB<br>Contractor RFQ<br>Subrecipients<br>Vendors |
| ARPA Terms, Conditions, & Records | 9. Compliance with Applicable Law and Regulations.<br>a. Recipient agrees to comply with the requirements of section 603 of the Act, regulations adopted by Treasury pursuant to section 603(f) of the Act, and guidance issued by Treasury regarding the foregoing. Recipient also agrees to comply with all other applicable federal statutes, regulations, and executive orders, and Recipient shall provide for such compliance by other parties in any agreements it enters into with other parties relating to this award.<br>b. Federal regulations applicable to this award include, without limitation, the following:<br>i. Uniform Administrative Requirements, Cost Principles, and Audit Requirements for Federal Awards, 2 CFR Part 200, other than such provisions as Treasury may determine are inapplicable to this Award and subject to such exceptions as may be otherwise provided by Treasury. Subpart F – Audit Requirements of the Uniform Guidance, implementing the Single Audit Act, shall apply to this award.<br>ii. Universal Identifier and System for Award Management (SAM), 2 CFR Part 25, pursuant to which the award term set forth in Appendix A to 2 CFR Part 25 is hereby incorporated by reference. | Section 9901 of the American Rescue Plan Act, Pub. L. No. 117-2;<br>Section 602(b), 603(b) and/or 603(c) as applicable | Contractor RFP/IFB<br>Contractor RFQ<br>Subrecipients<br>Vendors |

| THRESHOLD | PROVISION | CITATION | PROVISION APPLIES TO |
|---|---|---|---|
| | iii. Reporting Subaward and Executive Compensation Information, 2 CFR Part 170, pursuant to which the award term set forth in Appendix A to 2 CFR Part 170 is hereby incorporated by reference.<br>iv. OMB Guidelines to Agencies on Governmentwide Debarment and Suspension (Non-procurement), 2 CFR Part 180, including the requirement to include a term or condition in all lower tier covered transactions (contracts and subcontracts described in 2 CFR Part 180, subpart B) that the award is subject to 2 CFR Part 180 and Treasury's implementing regulation at 31 CFR Part 19.<br>v. Recipient Integrity and Performance Matters, pursuant to which the award term set forth in 2 CFR Part 200, Appendix XII to Part 200 is hereby incorporated by reference.<br>vi. Governmentwide Requirements for Drug-Free Workplace, 31 CFR Part 20. (Subrecipient Only)<br>vii. New Restrictions on Lobbying, 31 CFR Part 21.<br>viii. Uniform Relocation Assistance and Real Property Acquisitions Act of 1970 (42 U.S.C. §§ 4601-4655) and implementing regulations.<br>ix. Generally applicable federal environmental laws and regulations.<br><br>c. Statutes and regulations prohibiting discrimination applicable to this award include, without limitation, the following:<br>i. Title VI of the Civil Rights Act of 1964 (42 U.S.C. §§ 2000d et seq.) and Treasury's implementing regulations at 31 CFR Part 22, which prohibit discrimination on the basis of race, color, or national origin under programs or activities receiving federal financial assistance;<br>ii. The Fair Housing Act, Title VIII of the Civil Rights Act of 1968 (42 U.S.C. §§ 3601 et seq.), which prohibits discrimination in housing on the basis of race, color, religion, national origin, sex, familial status, or disability;<br>iii. Section 504 of the Rehabilitation Act of 1973, as amended (29 U.S.C. § 794), which prohibits discrimination on the basis of disability under any program or activity receiving federal financial assistance;<br>iv. The Age Discrimination Act of 1975, as amended (42 U.S.C. §§ 6101 et seq.), and Treasury's implementing regulations at 31 CFR Part 23, which prohibit discrimination on the basis of age in programs or activities receiving federal financial assistance; and<br>v. Title II of the Americans with Disabilities Act of 1990, as amended (42 U.S.C. §§ 12101 et seq.), which prohibits discrimination on the basis of disability under programs, activities, and services provided or made available by state and local governments or instrumentalities or agencies thereto. | | |
| ARPA Terms, Conditions, & Records | 10. Remedial Actions. In the event of Recipient's noncompliance with section 603 of the Act, other applicable laws, Treasury's implementing regulations, guidance, or any reporting or other program requirements, Treasury may impose additional conditions on the receipt of a subsequent tranche of future award funds, if any, or take other available remedies as set forth in 2 CFR § 200.339. In the case of a violation of section 603(c) of the Act regarding the use of funds, previous payments shall be subject to recoupment as provided in section 603(e) of the Act. | Section 9901 of the American Rescue Plan Act, Pub. L. No. 117-2;<br>Section 602(b), 603(b) and/or 603(c) as applicable | Subrecipients |
| ARPA Terms, Conditions, & Records | 11. Hatch Act. Recipient agrees to comply, as applicable, with requirements of the Hatch Act (5 U.S.C. §§ 1501-1508 and 7324-7328), which limit certain political activities of State or local government employees whose principal employment is in connection with an activity financed in whole or in part by this federal assistance. | Section 9901 of the American Rescue Plan Act, Pub. L. No. 117-2;<br>Section 602(b), 603(b) and/or 603(c) as applicable | Subrecipients |
| ARPA Terms, Conditions, & Records | 12. False Statements. Recipient understands that making false statements or claims in connection with this award is a violation of federal law and may result in criminal, civil, or administrative sanctions, including fines, imprisonment, civil damages and penalties, debarment from participating in federal awards or contracts, and/or any | Section 9901 of the American Rescue Plan Act, Pub. L. No. 117-2;<br>Section 602(b), | Contractor RFP/IFB<br>Contractor RFQ<br>Subrecipients<br>Vendors |

| THRESHOLD | PROVISION | CITATION | PROVISION APPLIES TO |
|---|---|---|---|
| | other remedy available by law. | 603(b) and/or 603(c) as applicable | |
| ARPA Terms, Conditions, & Records | 13. Publications. Any publications produced with funds from this award must display the following language: "This project [is being] [was] supported, in whole or in part, by federal award number [enter project FAIN] awarded to [name of Recipient] by the U.S. Department of the Treasury." | Section 9901 of the American Rescue Plan Act, Pub. L. No. 117-2; Section 602(b), 603(b) and/or 603(c) as applicable | Subrecipients |
| ARPA Terms, Conditions, & Records | 14. Debts Owed the Federal Government.<br>a. Any funds paid to Recipient (1) in excess of the amount to which Recipient is finally determined to be authorized to retain under the terms of this award; (2) that are determined by the Treasury Office of Inspector General to have been misused; or (3) that are determined by Treasury to be subject to a repayment obligation pursuant to section 603(e) of the Act and have not been repaid by Recipient shall constitute a debt to the federal government.<br>b. Any debts determined to be owed the federal government must be paid promptly by Recipient. A debt is delinquent if it has not been paid by the date specified in Treasury's initial written demand for payment, unless other satisfactory arrangements have been made or if the Recipient knowingly or improperly retains funds that are a debt as defined in paragraph 14(a). Treasury will take any actions available to it to collect such a debt. | Section 9901 of the American Rescue Plan Act, Pub. L. No. 117-2; Section 602(b), 603(b) and/or 603(c) as applicable | Subrecipients |
| ARPA Terms, Conditions, & Records | 15. Disclaimer.<br>a. The United States expressly disclaims any and all responsibility or liability to Recipient or third persons for the actions of Recipient or third persons resulting in death, bodily injury, property damages, or any other losses resulting in any way from the performance of this award or any other losses resulting in any way from the performance of this award or any contract, or subcontract under this award.<br>b. The acceptance of this award by Recipient does not in any way establish an agency relationship between the United States and Recipient. | Section 9901 of the American Rescue Plan Act, Pub. L. No. 117-2; Section 602(b), 603(b) and/or 603(c) as applicable | Subrecipients |
| ARPA Terms, Conditions, & Records | 16. Protections for Whistleblowers.<br>c. In accordance with 41 U.S.C. § 4712, Recipient may not discharge, demote, or otherwise discriminate against an employee in reprisal for disclosing to any of the list of persons or entities provided below, information that the employee reasonably believes is evidence of gross mismanagement of a federal contract or grant, a gross waste of federal funds, an abuse of authority relating to a federal contract or grant, a substantial and specific danger to public health or safety, or a violation of law, rule, or regulation related to a federal contract (including the competition for or negotiation of a contract) or grant.<br>d. The list of persons and entities referenced in the paragraph above includes the following:<br>i. A member of Congress or a representative of a committee of Congress;<br>ii. An Inspector General;<br>iii. The Government Accountability Office;<br>iv. A Treasury employee responsible for contract or grant oversight or management;<br>v. An authorized official of the Department of Justice or other law enforcement agency;<br>vi. A court or grand jury; or<br>vii. A management official or other employee of Recipient, contractor, or subcontractor who has the responsibility to investigate, discover, or address misconduct.<br>c. Recipient shall inform its employees in writing of the rights and remedies provided | Section 9901 of the American Rescue Plan Act, Pub. L. No. 117-2; Section 602(b), 603(b) and/or 603(c) as applicable | Contractor RFP/IFB<br>Contractor RFQ<br>Subrecipients<br>Vendors |

| THRESHOLD | PROVISION | CITATION | PROVISION APPLIES TO |
|---|---|---|---|
| | under this section, in the predominant native language of the workforce. | | |
| ARPA Terms, Conditions, & Records | 17. Increasing Seat Belt Use in the United States. Pursuant to Executive Order 13043, 62 FR 19217 (Apr. 18, 1997), Recipient should encourage its contractors to adopt and enforce on-the-job seat belt policies and programs for their employees when operating company-owned, rented or personally owned vehicles. | Section 9901 of the American Rescue Plan Act, Pub. L. No. 117-2; Section 602(b), 603(b) and/or 603(c) as applicable | Contractor RFP/IFB<br>Contractor RFQ<br>Subrecipients<br>Vendors |
| ARPA Terms, Conditions, & Records | 18. Reducing Text Messaging While Driving. Pursuant to Executive Order 13513, 74 FR 51225 (Oct. 6, 2009), Recipient should encourage its employees, subrecipients, and contractors to adopt and enforce policies that ban text messaging while driving, and Recipient should establish workplace safety policies to decrease accidents caused by distracted drivers | Section 9901 of the American Rescue Plan Act, Pub. L. No. 117-2; Section 602(b), 603(b) and/or 603(c) as applicable | Contractor RFP/IFB<br>Contractor RFQ<br>Subrecipients<br>Vendors |

## Exhibit C – Other Related Information

To be inserted

## Exhibit D – Insurance Certificate

To be inserted

## Exhibit E – Bid, Performance, and Payment Bonds

To be inserted

## Exhibit F – Eligibility Verification (SAM.gov)

Vendor to provide a dated printout of their active status without exclusions from SAM.gov website

## Exhibit G – Certificate of Interested Parties (Form 1295)

Form 1295 (Certificate of Interested Parties) must be completed on the Texas Ethics Commission's website as part of this project prior to contract execution. Form 1295 can be accessed here: https://www.ethics.state.tx.us/filinginfo/1295/ and must be returned with the certification number assigned after completion

# CITY COUNCIL AGENDA FORM

Meeting Date: March 10, 2025
Agenda Item: 9.IV.
Prepared by: Amanda Hobby
Reviewed by:
Department: Public Works

**AGENDA ITEM DESCRIPTION:**
Approving the purchase of two (2) Caterpillar 303.5 Mini Excavators from Mustang CAT utilizing allocated ARPA Funds in the amount of $125,266.88 - *Public Works*

**STAFF BRIEFING:**
The city received five (5) bids: R.B. Everett - Canopy Option $73,030.00 (Incomplete Bid), R.B. Everett - Cab Option $85,292.00 (Incomplete Bid),
ASCO - $113,000.00, King Ranch - $113,871.84, Mustang CAT - $125,266.88

**HISTORY:**
The utility department currently utilizes a 2012 Kubota mini excavator. Due to the amount of usage as well as the age, the equipment is constantly in the shop for repairs.

**FISCAL IMPACT:**
Allocated ARPA Funds- $125,266.68

# City of La Marque

1111 Bayou Road
La Marque, Texas 77568

## REQUEST FOR PROPOSALS (RFP)
## COMPETITIVE PROCUREMENT FOR
## GENERAL SERVICES, SUPPLIES, AND/OR EQUIPMENT

This RFP is being supported

by federal award number [RCP-056096]

allocated to the

## City of La Marque

under the

## American Rescue Plan Act (ARPA)

## Coronavirus State and Local Fiscal Recovery Funds (SLFRF)

## by the U.S. Department of the Treasury

**Prepared By: Department of Public Works**

## Procurement Reference #2232

## American Rescue Plan Act (ARPA)
## Request for Proposals (RFP)

Date: October 1, 2024

Re: Request for Proposals (RFP) for two (2) 2024 Mini-Excavators funded with Coronavirus State and Local Fiscal Recovery Funds (SLFRF) Allocated Under the American Rescue Plan Act (ARPA)

Dear Vendor:

The City of La Marque, hereinafter called "Entity", has received an allocation of American Rescue Plan Act (ARPA) funds, and is issuing a Request for Proposals (RFP) for a general purchases and supplies contract. The item(s) are being solicited to assist the Entity in completing and implementing programs and/or projects funded with its allocation of ARPA funds.

The Sole Point of Contact for this solicitation may provide information regarding this RFP. Refer to the **Schedule of Events and Selection Summary** in Section 1 of this document for response details.

Respondent is responsible for ensuring that their RFP response is received in a timely manner and that it contains all elements of the RFP, including all required forms and any addendums issued. Respondent should complete the Solicitation Response Cover Sheet/Acknowledgement of Addenda/Submission Checklist contained in Attachment A and all other requirements identified in the RFP. RFP responses received after the deadline will not be opened and therefore not evaluated or considered for award, regardless of whether or not the delay was outside the control of the submitting provider. The City of La Marque reserves the right to negotiate with providers submitting timely responses in accordance with state and federal procurement requirements, to reject any and all bids, and to select multiple respondents if it deems it's in the best interest of the Entity and/or desires to do so.

The Entity is an Affirmative Action/Equal Opportunity Employer. Minority Business Enterprises, Small Business Enterprises, Women Business Enterprises, and Labor Surplus Area firms are encouraged to submit bids.

**CONTENTS** **PAGE**


**AMERICAN RESCUE PLAN ACT (ARPA) REQUEST FOR PROPOSALS (RFP)** **2**

**REQUEST FOR PROPOSALS – GENERAL INFORMATION** **4**

**SECTION 1 – SCHEDULE OF EVENTS AND SELECTION SUMMARY** **4**

**SECTION 2 – INTRODUCTION AND GENERAL CONDITIONS** **6**

**SECTION 3 – SCOPE OF WORK/TECHNICAL SPECIFICATIONS** **9**

**SECTION 4 – EVALUATION CRITERIA** **12**

**SECTION 5 – RESPONSE SUBMISSION REQUIREMENTS** **14**

**LIST OF EXHIBITS** **16**

EXHIBIT A: PROJECT SCOPE OF WORK 17

EXHIBIT B: REQUIRED CONTRACT PROVISIONS 18

EXHIBIT C: OTHER RELEVANT INFORMATION/SPECIAL CONDITIONS 31

**LIST OF ATTACHMENTS A THROUGH L** **32**

ATTACHMENT A: SOLICITATION RESPONSE COVER SHEET/ACKNOWLEDGEMENT OF ADDENDA/SUBMISSION CHECKLIST 33

ATTACHMENT B: PRICING SHEET 35

ATTACHMENT C: SYSTEM FOR AWARD MANAGEMENT (SAM.GOV) RECORD SEARCH 36

ATTACHMENT D: CUSTOMER/CLIENT REFERENCES 38

ATTACHMENT E: CERTIFICATE OF INSURANCE (IF APPLICABLE) 41

ATTACHMENT F: ETHICS AND CONFLICT OF INTEREST ACKNOWLEDGEMENT 42

ATTACHMENT G: STATEMENT OF CONFLICTS OF INTEREST (IF ANY) 43

ATTACHMENT H: CONFLICT OF INTEREST QUESTIONNAIRE FORM (CIQ) 44

ATTACHMENT I: DISCLOSURE OF LOBBYING ACTIVITIES SF-LLL CERTIFICATION 46

ATTACHMENT J: TEC CERTIFICATE OF INTERESTED PARTIES (FORM 1295) 48

ATTACHMENT K: BIDDER'S CERTIFICATION 49

ATTACHMENT L: NON-COLLUSION AFFIDAVIT 50

**APPENDIX I – SAMPLE CONTRACT** **51**

## SECTION 1 – SCHEDULE OF EVENTS AND SELECTION SUMMARY

1.1 **SCHEDULE OF EVENTS – ALL DATES ARE TENTATIVE**

1.1.1 The Entity reserves the right to change dates at any time. At the sole discretion of the Entity, events listed in Section 1 are subject to scheduling changes and cancellation. The Entity will make public any changes to the stated schedule.

1.1.2 All requests, questions, or other communication about this solicitation shall be made in writing and addressed to the Entity's Sole Point of Contact listed in the **Schedule of Events + Response Requirements** that follow. Only the Sole Point of Contact may be contacted regarding required elements for this RFP.

1.1.3 **Respondent must review all documents and information in the *Exhibits* section and complete the required documents in the *Attachments* section. The completed Attachments, including the signed Pricing Sheet, must be contained within the Proposal Response and submitted to the Point of Contact listed in the Schedule of Events + Response Requirements that follow.**

### SCHEDULE OF EVENTS + RESPONSE REQUIREMENTS

| SCHEDULE OF EVENTS | |
|---|---|
| **RFP NOTICE DATE:** | October 1, 2024 |
| **VENDOR QUESTIONS DUE:** | October 15, 2024, 5:00 PM CST |
| **QUESTIONS ANSWERED BY:** | October 22, 2024, 5:00 PM CST |
| **PRE-PROPOSAL CONFERENCE:**<br><br>The Entity shall reject responses submitted by firms that do not attend the mandatory pre-proposal conference. | None |
| **SITE VISIT:**<br><br>The Entity shall reject responses submitted by firms that do not attend the mandatory site visit. | If needed, will be scheduled. |
| **PROPOSAL DUE DATE:** | October 31, 2024, 10:00 AM CST |
| | |
| **ESTIMATED AWARD DATE:** | November 18, 2024, 6:00 PM CST |
| **RESPONSE REQUIREMENTS** | |

| QUESTIONS & ANSWERS ONLY – SOLE POINT OF CONTACT | |
|---|---|
| The Entity will allow written questions and requests for clarification of this solicitation. Questions must be submitted by email to the Sole Point of Contact listed below. Respondents' names will be removed from questions in any responses released. | |
| **SOLE POINT OF CONTACT NAME:** | City Clerk |
| **ADDRESS:** | 1111 Bayou Road La Marque, TX 77568 |
| **EMAIL:** | bids@cityoflamarque.org |
| **PHONE:** | 409-938-9259 |
| **DELIVERY OF RESPONSE PROPOSAL – POINT OF CONTACT** | |
| **For digital delivery,** the Subject Line should include Respondent's Name, RFP number, and time/due date of RFP and completed response and all attachments uploaded to the following point of contact: | |
| **NAME:** | - |
| **TITLE:** | City Clerk |
| **DELIVERY POINT:** | Bidsubmit.cityoflamarque.org |
| | |
| **If mailed or hand-delivered,** sealed proposals (an original and 3 copies) should be submitted on the original forms provided. Each response must be sealed and should be placed in a properly identified envelope with Respondent's Name, RFP number, and time/due date of RFP. | |
| **For mail or hand-delivery,** deliver response and all attachments to: | |
| **NAME:** | - |
| **TITLE:** | City Clerk |
| **ADDRESS:** | 1111 Bayou Road LaMarque, TX 77568 |
| | |
| | |

## 1.2 SELECTION OF RESPONDENT(S)

1.2.1 The Entity intends to select Respondent(s) that best meet the needs of the Entity and that provide the best overall value. The Entity reserves the right to award multiple contracts from the finalist pool of successful Respondent(s). Respondents will be rated and ranked according to the evaluation criteria set forth below. The Entity intends to enter into negotiations with the top-ranked Respondent (i.e., the most highly qualified) and attempt to negotiate a fair and reasonable price; if negotiations fail, the Entity shall formally end negotiations with that respondent and attempt to negotiate with the next most highly qualified provider. The Entity shall proceed in like manner until it has contracted with a sufficient number of providers to respond to the identified scope of work.

1.2.2 The Entity reserves the right to check references on any projects performed by the Respondent, whether provided by the Respondent or known by the Entity.

1.2.3 The Entity is not required to accept the lowest cost proposal.

1.2.4 The Entity may make such investigation as deemed necessary to determine the ability of the Respondent to perform the work, and the Respondent shall furnish to the Entity all such information by the date specified by the Entity.

1.2.5 The Entity may conduct such investigations as it deems necessary or appropriate to assist in the evaluation of any RFP response and to establish the responsibility, qualifications, and financial ability of the Respondent, their proposed subcontractors, and other persons or organizations submitted within a Respondent's response to do the work to the Entity's satisfaction within the prescribed time.

1.2.6 The Entity reserves the right to conduct interviews of short-listed Respondent(s) prior to making a final selection.

1.2.7 The Entity reserves the right to contact references as deemed necessary to complete its analysis.

**See SECTION 4 – EVALUATION CRITERIA, for additional information on how Respondents will be evaluated and selected.**

# SECTION 2 – INTRODUCTION AND GENERAL CONDITIONS

## 2.1 GENERAL DESCRIPTION OF THE SCOPE OF WORK (SOW) – SEE *SECTION 3* AND *EXHIBIT A* FOR SOW DETAILS

The Entity has received an allocation of American Rescue Plan Act (ARPA) funds and is issuing a Request for Proposals (RFP) for a general purchases and supplies contract. The item(s) are being solicited to assist the Entity in completing and implementing programs and/or projects funded with its allocation of ARPA funds.

This solicitation includes purchase of:

2.1.1 **General Description:** Examples: two (2) 2024 Mini-Excavators

2.1.2 The scope of work includes all labor, materials, goods and/or services necessary to provide the purchased items, including any installation specified in **Exhibit A**. The respondent shall submit a written copy of all warranty information prior to final acceptance by Entity.

2.1.3 **REFERENCED BRAND EXAMPLE:** Catalogs, brand names or manufacturer's references are descriptive only and indicate type and quality desired. Proposals on brands of like nature and quality will be considered. If proposing other than the referenced brands/model number, Respondent must show manufacturer, brand or trade name, product number and provide complete descriptive information of product offered and include with response. Failure to take exception to specifications or reference data will require Respondent to furnish specified brand names, numbers, etc.

**2.2 CONSIDERATION OF AWARD**

To be considered for award, Respondents must adhere to the requirements, when applicable to Vendors, as set forth in **Exhibit B**, the ARPA Required Provisions, and provide all other required information and documentation as set forth in this solicitation.

**2.3 CONTRACT AWARD**

The Entity may award a Firm Fixed Price Contract. A Respondent's proposal must be responsive to this solicitation and include all required documents as instructed in the solicitation and listed in the *Solicitation Response Cover Sheet/Acknowledgement of Addenda/Submission Checklist* **(Attachment A)**.

**2.4 TERM OF PURCHASE CONTRACT**

The Contract or Purchase Order shall be effective upon date of execution (signed by the Entity designee), shall contain terms and conditions for the purchase, including delivery date and delivery location, and shall expire upon delivery and final acceptance by the Entity. A sample contract is available for review at **Appendix I**.

**2.5 BID ACCEPTANCE**

2.5.1 Proposals must be received, time stamped or otherwise acknowledged before the specified hour and date. Late submittals WILL NOT be considered under any circumstances. The Entity will not be held responsible for any solicitation response that is mishandled prior to receipt by the Entity. The Entity will not be responsible for any technical issues that result in late delivery, inappropriately identified documents, or other submission error that may lead to disqualification (including substantive or administrative) or nonreceipt of the Respondent's response.

2.5.2 The Entity reserves the right to accept or reject any and all proposals, to accept any proposal deemed advantageous and to waive irregularity in the proposals. By submitting a response, the Respondent acknowledges and will adhere to all specifications as stated within this procurement packet.

2.5.3 Proposals CANNOT be altered or amended after the due date. Any alterations made before the due time must be initialed by Respondent or authorized agent. No response may be withdrawn after due date without approval and based on a written acceptable reason.

2.5.4 The Entity reserves the right to revise or amend the specifications prior to the due date. Such revisions or amendments, if any, will be announced by amendments or addendums to these specifications. Copies of such amendments or addendums so issued will be posted to the Entity's bidding websites. If Respondent demonstrates just reason for a change, the Entity must have at least five (5) working days' notice prior to submission due date.

2.5.5 In the event that Respondent finds discrepancies in or omissions from the specifications or other documents or be in doubt as to their meaning, Respondent should at once notify the Entity Sole Point of Contact and obtain clarification prior to submitting a response.

2.5.6 All Respondents must meet or exceed the minimum specifications to be considered a valid response. The Entity reserves the right to accept or reject all or any part of any response, waive minor technicalities and award the contract either to the lowest responsible Respondent or to the Respondent who provides goods or services at the best value for the Entity.

2.5.7 The Respondent agrees to protect the Entity from claims involving infringement of patents or copyrights.

PROPRIETARY OR CONFIDENTIAL INFORMATION; TEXAS PUBLIC INFORMATION ACT: Any proprietary, trade secret, or otherwise confidential information Respondent includes in its Proposal must be clearly labeled as proprietary or confidential information, and Respondent must identify the specific exception to disclosure in the Public Information Act (PIA). Merely making a blanket claim that the entire Proposal is protected from disclosure because it contains some proprietary information is not acceptable and shall make the entire Proposal subject to release under the PIA. Any information which is not clearly identified as proprietary or confidential shall be deemed to be subject to disclosure pursuant to the PIA.

Information, documentation, and other material in connection with this Response or any resulting Contract may be subject to public disclosure under the Texas PIA, Chapter 552 of the Texas Gov't Code.

2.5.8 There is no guarantee a contract will be awarded. The Entity reserves the right to cancel this RFP at any time.

2.5.9 All proposals become public documents and are subject to public review (upon request and as allowed by law). The submission of an RFP response will constitute representation by the Respondent that it understands and has complied with the requirements of the RFP. Submission of a response indicates the RFP information provided was sufficient in scope and detail to convey understanding of anticipated terms and conditions for performance of the work.

2.5.10 RFP Respondents assume all costs of preparation of the proposal. RFP responses become the property of the Entity.

**2.6 PROHIBITED COMMUNICATION**

On issuance of this solicitation, except for the written inquiries described in Section 2.6 above, the Entity, its representative(s), or partners will not answer any questions or otherwise discuss the contents of this solicitation with any potential respondent. This restriction does not preclude discussions between affected parties for the purposes of conducting business unrelated to this solicitation. Failure to comply with these requirements may result in disqualification of respondent's solicitation response.

**2.7 TERMINATION CONDITIONS**

See Contract at **Appendix I** for Termination Conditions.

2.7.1 **FAILURE TO ENTER INTO A CONTRACT**

Should the Selected Respondent ("Vendor"), to whom the contract is awarded, fail to enter into a contract within twenty-one (21) business days, the Entity may then, at its option, retain the Vendor's bid deposit/bond (if required) and accept the bid of the next lowest responsible bidder.

## SECTION 3 – SCOPE OF WORK/TECHNICAL SPECIFICATIONS

### 3.1 MINIMUM REQUIREMENTS

3.1.1 The selected Vendor shall have no convictions or civil judgments preceding nor thereafter this solicitation rendered against Respondent for 1) commission of fraud or a criminal offense in connection with obtaining, attempting to obtain, or performing a public (federal, state or local) transaction or contract under a public transaction; 2) violation of federal or state antitrust statutes or commission of embezzlement, theft, forgery, bribery, falsification or destruction of records, making false statements, or receiving stolen property.

3.1.2 The selected Vendor shall not ever have been indicted for or otherwise criminally or civilly charged by a government entity (federal, state, or local) with commission of any of the offenses enumerated above.

3.1.3 Where applicable, Vendor's staff must meet and maintain current certifications and or licensure requirements as mandated by state law or the appropriate licensing authority.

3.1.4 Vendor must not be debarred at the time of response submission, and prior to award of a contract. The System for Award Management (SAM.gov) and the Texas Comptroller's Debarred Vendor List will be checked to ensure the Vendor is not excluded from contract participation at the federal level. If the Vendor is debarred, the Vendor's proposal will not be evaluated.

### 3.2 SCOPE OF SERVICES Construct

3.2.1 **The required products or services shall be provided in accordance with attached Exhibits:**

- **Exhibit A:** Project Scope of Work
- **Exhibit B:** ARPA Required Provisions
- **Exhibit C:** Other Relevant Information

3.2.2 **Work Orders**

During the term of any contract awarded, the Entity may request the Vendor to perform certain tasks as described in the scope, subject to a specific work order authorization. All work authorizations shall be in writing, signed by all parties, and shall include a scope of services, a list of tasks to be performed, a time schedule, a list of deliverables and such other information or special conditions as may be necessary for the work requested.

3.2.3 **Condition of Product:** New Equipment ONLY; NO re-manufactured or "gray market" items. All items must be covered by the manufacturer's warranty. The unit(s) shall be made ready for continuous operation upon delivery. Respondent is cautioned that any unit delivered to the FOB point that does not meet specifications in every aspect will not be accepted.

3.2.4 **All Parts:** All parts not specifically mentioned which are necessary for the unit to be complete and ready for operation or which are normally furnished as standard equipment shall be furnished by the vendor. All parts shall conform in strength, quality, and workmanship to the accepted standards of the industry.

3.2.5 **Manuals:** Manuals containing illustrated parts list and operating and service instructions for the units shall be delivered with units. Manuals shall outline all necessary service and operating instructions for the units delivered and provide necessary warning and safety precautions.

3.2.6 **Warranty Requirements:** The units shall be warranted against defects in material and workmanship for a standard manufacturer's warranty and shall cover 100% parts and labor for the units. Vendor shall furnish warranty and a list of warrantied repair companies to the Entity at time of delivery. The warranty begins on the date the units are determined to meet specifications and accepted by the Entity.

**3.3 DELIVERY AND ACCEPTANCE**

3.3.1 **Freight Charges:** Shipping shall be Free on Board (FOB) destination; therefore, unit prices must include all shipping, handling, fuel surcharges, and delivery fees.

3.3.2 **Delivery Schedule:** Recommended delivery not to exceed 90 calendar days from date of award; delivery terms may be a factor in determining award. Respondent must contact the Entity point of contact to schedule delivery date and time. Respondent shall provide a minimum forty-eight (48) hours' notice prior to delivery.

**3.4 DELIVERY CONTACT(S):** Respondent shall contact the Entity for delivery a minimum of one (1) week in advance to coordinate delivery.

| | |
|---|---|
| **Delivery Contact Name:** | City Clerk |
| **Phone:** | (409) 938-9259 |
| **Email:** | bids@cityoflamarque.org |

**3.5 REGISTRATION AND TITLING (when applicable):** Permanent registration and titling will be performed by **the Entity**. **DO NOT REGISTER ITEM**. Respondent shall supply, as applicable, dealer's tag for item for sixty (60) days from date of delivery. The original Certificate of Origin (COO) or Manufacturer's Statement of Origin (MSO) as well as the most current version of TXDMV Form 130U or Application for Texas Title with signature shall be submitted with an invoice to the Entity.

**3.6 DELIVERY DELAYS:** If delay is foreseen, Respondent shall give written notice to the Entity and must keep the Entity advised of status of order at all times. Default in promised Delivery Days After Receipt of Order (ARO) without accepted reasons or failure to meet specifications authorizes the Entity to cancel contract/Purchase Order.

**3.7 COMPLIANT PRODUCTS:** Delivery does not occur until the Respondent delivers products, materials, or services in full compliance with the specifications to Entity's FOB destination, unless delivery is specifically accepted, in whole or in part, by the Entity. Providing products, materials, or services which do not meet all specification requirements does not constitute delivery. Entity reserves the right to require new delivery or a refund in the event that materials or products not meeting specifications are discovered after payment has been made. NO SUBSTITUTIONS PERMITTED WITHOUT WRITTEN APPROVAL OF THE ENTITY.

**3.8 ACCEPTANCE:** All equipment ordered will be subject to acceptance inspection and performance testing upon receipt. Acceptance inspection and performance testing will not take more than five (5) working days, weather permitting. Respondent will be notified within this time frame of any units not

delivered in full compliance with the purchase order specifications. In the event the goods tested fail to meet or exceed all conditions and requirements of the solicitation and Contract, the goods will be rejected in whole or in part, at the State's Entity's option, and returned to the Vendor or held for disposition at the Vendor's expense. Latent defects may result in cancellation of the Contract at no expense to the Entity.

## 3.9 RECORD KEEPING

3.9.1 Respondents shall provide, enter, or upload all documentation, communications, and records including all permits, certifications, warranties, and approvals regarding all provided services/ products as instructed by the Entity.

3.9.2 Respondents shall maintain records of all events that affect, or may be expected to affect the quality, scope, or progress of the services. All records shall be retained for a period of **five (5) years** following the closeout of the Entity's federal grant.

3.9.3 **Insurance**

3.9.3.1 If applicable, an original, certified copy of an Insurance Certificate listing the Entity as additional insured, must be submitted with the Respondent's submittal **(see Attachment E for requirements).** The successful Respondent will be required to maintain at all times during performance of the Contract, the insurance detailed below.

3.9.3.2 Workers' Compensation Insurance

3.9.3.3 Employers' Liability Insurance

3.9.3.4 Comprehensive General Liability Insurance

3.9.3.5 Excess Liability Insurance, Comprehensive General Liability Insurance, Comprehensive Automobile Liability Insurance

## 3.10 TERMS AND CONDITIONS

3.10.1 **Indemnity Clause** – The Respondent agrees to indemnify and save harmless the Entity and its officers, agents, and employees from any and all claims, causes or action, and damages of every kind, for injury to or death of any person and damages, to property arising out of or in connection with the work done by Respondent under this contract, and including acts or omissions of the Entity or its officers, agents, or employees in connection with said contract.

3.10.2 **Equal Opportunity Employer** – The successful Respondent shall warrant and agree that he/she is an Equal Opportunity Employer. Should complaints of any form of discrimination, either in dispensation of the service, or within company hiring policies be substantiated, this contract may be terminated immediately.

3.10.3 **Assignment** – The successful Respondent may not assign, sell, or otherwise transfer this contract without prior written consent of the Entity.

3.10.4 **Compliance with Laws** – The Respondent agrees to comply with the requirements of Section 603 of the Act, regulations adopted by Treasury pursuant to Section 603(f) of the Act, and guidance issued by Treasury regarding the foregoing.

3.10.4.1 Additionally, all applicable local government codes for the State of Texas also apply to this contract. All equipment, supplies and work furnished under this contract shall comply with applicable laws, ordinances, and regulations. Respondent shall obtain and pay for such

permits and inspections as are required for the legal performance of this work, unless otherwise specified. Respondent shall comply with all federal and state laws and Entity's ordinances and codes applicable to the Respondent's operation under this contract. These specifications and the contract resulting here shall be fully governed by the laws of the State of Texas and shall be fully performable in Galveston County, Texas, where venue for any proceeding arising hereunder will lie.

3.10.5 **Silence of Specifications** – The apparent silence of specifications as to any detail, or the apparent omission from it or a detailed description concerning any point, shall be regarded as meaning that only the best commercial practice is to prevail and that only material and workmanship of the finest quality shall be used. All interpretations of specifications shall be made on the basis of this statement. The Respondent should request clarification from the Entity as specified in this document.

## SECTION 4 – EVALUATION CRITERIA

**4.1 RESPONSIVENESS OF QUALIFICATIONS SUBMISSION: Pass/Fail**

Qualifications submission shall be responsive to all material requirements that shall enable the evaluation committee to evaluate responses in accordance with the evaluation criteria to make a recommendation to Officials of the Entity.

**4.2 FINANCIAL STABILITY OF RESPONDENT: Pass/Fail**

Financial stability of the Respondent to successfully undertake the project and the ability to ensure performance over the duration of the contract.

**4.3 TECHNICAL REQUIREMENTS: 100 Points Total**

Extent to which the provided service or products meets the needs of the Entity, including, but not limited to, the criteria in the evaluation matrix and in the submission requirements section and as expressed in this document.

**4.4 EVALUATION CRITERIA:**

**Solicitation responses shall be evaluated in accordance with Part 200 of the Uniform Administrative Requirements, Cost Principles, and Audit Requirements. The Entity will make the selection on the basis of demonstrated competence and qualifications; and to a Respondent that provides a fair and reasonable price.**

The Entity evaluates the responses, prepares a Bid Tabulation sheet, determines the award on the basis of fair and reasonable pricing considered to be the Best Value to the Entity.

Only responses submitted in compliance with the **Schedule of Events + Response Requirements** section and meeting qualifications will be considered. Failure to submit the required information may be cause for rejection of the bid response. The Entity reserves the right to waive informalities and minor irregularities in bids received.

**Initial Compliance Screening**
The Entity will perform an initial screening of all solicitation responses received. Unsigned solicitation responses, and solicitation responses that do not meet the minimum qualifications above and/or do not include all required forms and information may be subject to rejection without further evaluation.

**Additional Evaluation Criteria**
All solicitations will be evaluated based on Responsiveness and Price. Responsiveness means adhering to the Terms and Conditions and specifications of the supplies requested.

***Evaluation Process:*** *The Entity's Evaluator(s) completes an evaluation of the submitted proposal using the criteria described below.* ***The proposal submitted must be a firm-fixed price.***

**EVALUATION CRITERIA**

| EVALUATION CRITERIA | SCORE |
|---|---|
| Responsiveness of Proposal | Pass/Fail |
| Financial Stability | Pass/Fail |
| Understanding of Work; Experience and Qualifications | 20 |
| Capacity to Perform, Delivery/Service Schedule, and References | 20 |
| Pricing | 60 |
| **TOTAL SCORE** | **100** |

## SECTION 5 – RESPONSE SUBMISSION REQUIREMENTS

This section details the requirements for submitting all required information. Respondents are advised to see **Schedule of Events + Response Requirements** on Page 4 of this document, and to carefully review all the requirements and submit all documents and information as indicated in this RFP. Additional information may be requested for clarification. Incomplete responses may lead to a submission being deemed nonresponsive and will not be considered.

To ensure some degree of uniformity in the submission, please follow the outline listed below.

### 5.1 STATEMENT OF INTEREST

The statement of interest should be limited to a maximum of two (2) pages and must include a brief introduction of the company, a statement of the Respondent's understanding of the work to be performed and that the company meets and will comply with the requirements set forth in this document.

### 5.2 EXPERIENCE AND RELEVANT QUALIFICATIONS

Respondent shall demonstrate related professional qualifications, experience, and knowledge similar to this scope of work. Response should include information similar in scope and size to the scope of work in this RFP. Limit to four (4) pages. Minimum submission shall address the following:

5.2.1 **Experience** – Respondents shall provide a concise narrative description of their firm's experience in services similar in size and scope to the requested scope of services. Describe any work performed in or for the Entity. Respondents shall provide descriptions of at least three (3) projects of similar size and scope to this Program. Projects should include project location, duration and project description and scope of work the Respondent performed.

5.2.2 **Relevant Qualifications** – Respondents must provide a brief summary to include total number and types of employees, skills, knowledge and abilities, company background history, and number of years in providing similar services as outlined in this document.

### 5.3 CAPACITY TO PERFORM

Respondent should state its firm commitment to provide goods or services within the prescribed delivery date and time.

5.3.1 **Work Capacity:** Respondent shall provide information to demonstrate capacity to perform requested work. Respondents shall provide a detailed typical schedule to show sequence of key work activities and the number of days to complete each task.

5.3.4 If applicable, **Bonding Capacity:** Respondent(s) shall provide proof of bonding capacity in a statement addressed to the Entity from a certified bonding company authorized to do business in the State of Texas. The letter must clearly state the amount of Firm's bonding capacity to be reserved for the Entity's projects. Firm shall carry a minimum bonding capacity of the project value upon execution of the Contract. The bond(s) must be made payable to the Entity. In your response, please provide a statement regarding your ability to provide proof of bonding as directed in the Exhibits that follow.

**5.4 FINANCIAL STABILITY**

Respondent shall provide a statement that includes the following:

5.4.1 A full disclosure of any events, liabilities, or contingent liabilities that could affect Respondent's financial ability to perform this contract; and

5.4.2 Other financial information sufficient for the Entity, in its sole judgement, to determine if Respondent is financially solvent or adequately capitalized.

**5.5 LEGAL ACTIONS**

Provide a list of all pending litigation and include a brief description of the reason for legal action (if applicable).

**5.6 PRICING**

5.6.1 Respondents shall complete and submit the Pricing Sheet (see **Attachment B**).

5.6.2 Prices for all goods and/or services shall be all inclusive. Pricing offered shall be valid for ninety (90) days from response due date.

5.6.3 The City of La Marque is exempt from taxes. DO NOT INCLUDE TAX IN YOUR PRICING SUBMITTAL.

5.6.4 Estimated Quantities – Quantities indicated are estimated based upon the best available information. The Entity reserves the right to increase or decrease the quantities by any amount deemed necessary to meet its needs without any adjustments in the bid price.

# LIST OF EXHIBITS

EXHIBIT A PROJECT SCOPE OF WORK

EXHIBIT B REQUIRED CONTRACT PROVISIONS

EXHIBIT C OTHER RELEVANT INFORMATION/SPECIAL CONDITIONS

# EXHIBIT A – PROJECT SCOPE OF WORK

To be provided by the Entity

| Item | Description | | Quantity | Unit of Measure |
|---|---|---|---|---|
| 1 | 2024 Mini Excavators | | 2 | See Below |
| 2 | | | | |
| 3 | | | | |
| 4 | | | | |
| 5 | **DELIVERY LOCATION: Provide the Delivery Location** | 1500 Municipal Drive, La Marque, Texas 77568 | | |
| 6 | **DELIVERY SCHEDULE: Provide the number of calendar days required for delivery after receipt of the order** | 90 days | | |

**Basic Specifications:**

- Net horsepower at 2400 rpm shall be at least 23.6 hp (17.6 kW) according to ISO 9249
- SAE rated gross horsepower at 2400 rpm shall be at least 24.7 hp (18.4 kW)
- The machine must be CR (Compact Radius) with no overhang over the side of the tracks in the standard configuration (without counterweight)
- Operating weight with the cab option shall be at least 7,982 lb.
- Lift capacity max configuration without bucket fitted, blade down, and long stick shall be no less than 2,965 lb. (1,345kg) at 6’6” (2.0 m) reach and 0 ft (0 m) height over the front and no less than 2,965 lb. (1,345kg) at 6’6” (2.0 m) reach and 0 ft (0 m) height over side
- Maximum digging depth with a long stick shall be at least 10’2”
- Maximum digging height with a long stick shall be at least 16’5”
- Maximum reach with a long stick shall be at least 18’0”
- Height to top of cab shall be 8’1”
- Ground clearance shall not be less than 12.2”
- Transport width shall be 5’10” with 11.8” tracks
- Maximum vertical wall shall be no less that 7’10” with a long stick

**Engine:**

- Engine shall be US EPA Tier 4 Final compliant
- Machine shall be water cooled, 4 stroke
- Engine shall have automatic engine idle that automatically lowers engine revolutions when machine is not in use to save fuel
- Machine shall have sealed electrical connectors
- Water separator in fuel line shall be factory installed standard equipment
- Machine shall have adjustable automatic engine shutdown
- Machine shall have automatic swing break

- Machine shall be equipped with battery disconnect standard

**Power/Transmission:**

- Travel speed shall be at least 1.6 mph (2.6 km/h) in low and 2.8 mph (4.5 km/h) in high
- Traction force shall be at least 6,969 lbf (31.0 kn) in low and 3,799 lbf (16.9 kn) in high
- Factory installed, standard auto two speed which provides better fuel efficiency since the machine will automatically go into higher power/torque only when the system senses that it is required while dozing, counter rotating, and uphill travel

**Hydraulic System:**

- Machine shall have one variable displacement piston pump with an output of 26 gal/m (100 L/m) at 2400 rpm, designated for travel, boom, stick and bucket
- Equipment operating pressure shall be at least 3,553 psi (245 bar)
- Travel operating pressure shall be at let 3,553 psi (245 bar)
- Operating swing pressure shall be at least 2,625 psi (181 bar)
- Primary auxiliary circuit shall have an output of at least 18 gal/min
- Secondary auxiliary circuit shall have an output of at least 7.0 gal/min
- All fittings shall be of the O Ring Face Seal type for superior sealing against leaks
- Factory installed combined function (one-way/two-way) auxiliary high pressure hydraulic circuit shall be standard
- Auxiliary hydraulic valve shall be standard with hydraulic quick disconnects on the stick
- Machine shall be equipped with continuous auxiliary flow from factory
- Continuous flow must be able to be activated with flow in either direction and at any flow rate

**Undercarriage:**

- Track length shall be a minimum of 7’3”
- Machine shall have 11.8” rubber belt track standard from factory
- Ground pressure with 11.8” rubber belt shall be no more than 5.2 psi
- Machine equipped with fixed undercarriage available from factory, undercarriage with shall have a maximum width of 70.1”
- Machine shall come standard with tie down points on track frame

**Cab:**

- Machine shall have canopy option available from factory
- Machine shall come standard with interior cab lights with sealed pressurized cab
- Machine mut have adjustable auxiliary flow control for better controllability of attachments
- Pump flow shall decrease (auto-idle) when controls are in neutral for reduced fuel consumption and sound
- The rear window shall be able to be removed for escape in case of emergency
- Lower front window shall be able to be removed and secured within cab
- The cab door will be a hinged door design that has a mechanism that will lock the door I the open position
- Travel alarm shall be standard
- Machine shall have heat with variable temperature settings with sealed and pressurized cab available from factory
- Machine shall have multi-function capability of boom swing and upper body swing for extra machine versatility in tight areas

- Boom swing and upper body swing shall be able to be operated at the same time to maximize machine versatility and productivity
- Cab air conditioner shall have a primary filter that can be removed for inspection without any tools
- Machine shall have a 3” wide retractable seat belt as standard
- A 12-volt, 5-amp power supply with a cigar lighter type outlet shall be available for use of cell phones and two-way radios
- Machine shall have adjustable armrest that can be adjusted without tools
- Machine shall come standard with removable washable floormat
- Machine shall come standard with warning horn

**Boom / Stick:**

- The ability to order the machine with standard 49.6” or long stick 61.4” option shall be available
- Machine shall come standard with a swing boom
- Digging force with a standard stick shall be at least 4,249 lbs.
- Digging force with a long stick shall be at least 3,799 lbs.
- Bucket digging force shall be at least 7,419 lbs.
- Bucket rotation angle shall be 180 degrees
- Machine shall come with thumb ready from factory
- Machine shall have one piece boom 94.5”
- Machine shall come standard with boom light

**Blade:**

- Blade width shall be at least 70.1”
- Blade height shall be at least 13.8”
- Blade dig depth shall be at least 21.1”
- Blade lift height shall be at least 15.2”
- Dozer blade float shall be standard to give easy and fast site cleanup and leveling
- Blade shall come standard with bolt on cutting edge

**Swing System:**

- Machine swing speed shall be at least 9.0 rpm
- Machine boom left swing shall be at least 75 degrees
- Machine boom right swing shall be at least 50 degrees
- Machine shall have a spring applied, hydraulic release automatic swing break
- Machine shall have automatic swing break

**Work Tool Options:**

- Machine attachments shall come standard with pin on linkage
- A quick coupler system shall be available
- The hydraulic quick coupler must be able to be controlled from inside the cab

**Serviceability:**

- All daily maintenance areas shall be situated where they can be easily reached from ground level
- Machine shall come standard with a battery disconnect switch
- Fuse box shall be able to open without tools
- Scheduled oil sampling port for the main hydraulic system shall be provided for hydraulic oil to simplify sampling
- Radial seal air filter with double layered filter core shall be provided for better filtration

- Hydraulic system pressure taps shall be included for quick, easy, efficient, system diagnostics
- The engine fan guard shall fully enclose (360°) the engine fan
- An electronic priming fuel pump shall be standard
- Machine shall come standard with fuel water separator
- 24 Month / 2000-hour Manufacture warranty shall be standard

**Minimum Service Fill Capacities:**

- Fuel tank capacity shall not be less than 11.9 gal (45.0 L)
- Cooling system shall not hold less than 1.05 gal (4.0 L)
- Engine oil shall not hold less than 1.45 gal (5.5 L)
- Each final drive shall have a capacity of 0.16 gal (0.6 L)
- Hydraulic system shall not hold less than 9.2 gal (35.0 L)

**Owning / Operating Costs:**

- Factory-fill extended-life coolant with a minimum life of 12,000 hours, rated to -35° F (-37° C), shall be standard.
- Engine oil and filter shall have a recommended change interval of 500 hours
- Hydraulic system oil shall have a recommended change interval of 3000 hours

**Additional Features:**

- Machine boom and stick lowering check valve shall be available from factory
- 1st and 2nd Auxiliary lines shall be available from factory
- Water jacket heater shall be available from factory
- Machine LED front lights shall be available from factory
- Machine LED front and rear lights shall be available from factory
- Machine LED boom light shall be available from factory
- Machine mirrors left and right shall be available from factory
- Cab guarding shall be available from factory
- A rotating beacon shall be available from factory
- Machine shall come standard with two-point lifting
- 24” digging bucket with lift hooks attached to the back of bucket

**This project is being supported, in whole or in part, by the U.S. Department of the Treasury, in utilizing the U.S. Department of the Treasury Coronavirus State and Local Fiscal Recovery Funds (ARPA) program and is subject to all applicable Federal and State laws and regulations.**

# EXHIBIT B – ARPA REQUIRED PROVISIONS

CFR 200.327 Contract provisions. The Non-Federal entity's contracts should contain applicable provisions described in Appendix II to Part 200—Contract Provisions for Non-Federal Entity Contracts Under Federal Awards. The Non-Federal entity's contracts must contain the provisions described in Appendix II to Part 200—Contract Provisions for Non-Federal Entity Contracts Under Federal Awards, as applicable.

| THRESHOLD | PROVISION | CITATION | PROVISION APPLIES TO |
|---|---|---|---|
| | **2 CFR 200 Appendix II (A-L)** | | |
| >$250,000 (Simplified Acquisition Threshold) | Contracts for more than the simplified acquisition threshold, which is the inflation adjusted amount determined by the Civilian Agency Acquisition Council and the Defense Acquisition Regulations Council (Councils) as authorized by 41 U.S.C. 1908, must address administrative, contractual, or legal remedies in instances where contractors violate or breach contract terms, and provide for such sanctions and penalties as appropriate. | 2 CFR 200<br>APPENDIX II (A) | Contractor RFP/IFB<br>Contractor RFQ<br>Subrecipients |
| >$10,000 | All contracts in excess of $10,000 must address termination for cause and for convenience by the Non-Federal entity including the manner by which it will be affected and the basis for settlement. | 2 CFR 200<br>APPENDIX II (B) | Contractor RFP/IFB<br>Contractor RFQ<br>Subrecipients |
| None | Equal Employment Opportunity. Except as otherwise provided under 41 CFR Part 60, all contracts that meet the definition of "federally assisted construction contract" in 41 CFR Part 60-1.3 must include the equal opportunity clause provided under 41 CFR 60-1.4(b), in accordance with Executive Order 11246, "Equal Employment Opportunity" (30 FR 12319, 12935, 3 CFR Part, 1964-1965 Comp., p. 339), as amended by Executive Order 11375, "Amending Executive Order 11246 Relating to Equal Employment Opportunity," and implementing regulations at 41 CFR part 60, "Office of Federal Contract Compliance Programs, Equal Employment Opportunity, Department of Labor."<br>41 CFR 60-1.4 Equal opportunity clause.<br>(b) Federally assisted construction contracts. (1) Except as otherwise provided, each administering agency shall require the inclusion of the following language as a condition of any grant, contract, loan, insurance, or guarantee involving federally assisted construction which is not exempt from the requirements of the equal opportunity clause:<br>The [recipient] hereby agrees that it will incorporate or cause to be incorporated into any contract for construction work, or modification thereof, as defined in the regulations of the Secretary of Labor at 41 CFR Chapter 60, which is paid for in whole or in part with funds obtained from the Federal Government or borrowed on the credit of the Federal Government pursuant to a grant, contract, loan, insurance, or guarantee, or undertaken pursuant to any Federal program involving such grant, contract, loan, insurance, or guarantee, the following equal opportunity clause:<br>During the performance of this contract, the contractor agrees as follows:<br>(1) The contractor will not discriminate against any employee or applicant for employment because of race, color, religion, sex, sexual orientation, gender identity, or national origin. The contractor will take affirmative action to ensure that applicants are employed, and that employees are treated during employment without regard to their race, color, religion, sex, sexual orientation, gender identity, or national origin. Such action shall include, but not be limited to the following:<br>Employment, upgrading, demotion, or transfer; recruitment or recruitment advertising; layoff or termination; rates of pay or other forms of compensation; and selection for training, including apprenticeship. The contractor agrees to post in | 2 CFR 200<br>APPENDIX II (C)<br>and<br>41 CFR §60-1.4(b) | Contractor RFP/IFB<br>Contractor RFQ<br>Subrecipients |

| THRESHOLD | PROVISION | CITATION | PROVISION APPLIES TO |
|---|---|---|---|
| | conspicuous places, available to employees and applicants for employment, notices to be provided setting forth the provisions of this nondiscrimination clause.<br>(2) The contractor will, in all solicitations or advertisements for employees placed by or on behalf of the contractor, state that all qualified applicants will receive consideration for employment without regard to race, color, religion, sex, sexual orientation, gender identity, or national origin.<br>(3) The contractor will not discharge or in any other manner discriminate against any employee or applicant for employment because such employee or applicant has inquired about, discussed, or disclosed the compensation of the employee or applicant or another employee or applicant. This provision shall not apply to instances in which an employee who has access to the compensation information of other employees or applicants as a part of such employee's essential job functions discloses the compensation of such other employees or applicants to individuals who do not otherwise have access to such information, unless such disclosure is in response to a formal complaint or charge, in furtherance of an investigation, proceeding, hearing, or action, including an investigation conducted by the employer, or is consistent with the contractor's legal duty to furnish information.<br>(4) The contractor will send to each labor union or representative of workers with which he has a collective bargaining agreement or other contract or understanding, a notice to be provided advising the said labor union or workers' representatives of the contractor's commitments under this section and shall post copies of the notice in conspicuous places available to employees and applicants for employment.<br>(5) The contractor will comply with all provisions of Executive Order 11246 of September 24, 1965, and of the rules, regulations, and relevant orders of the Secretary of Labor.<br>(6) The contractor will furnish all information and reports required by Executive Order 11246 of September 24, 1965, and by rules, regulations, and orders of the Secretary of Labor, or pursuant thereto, and will permit access to his books, records, and accounts by the administering agency and the Secretary of Labor for purposes of investigation to ascertain compliance with such rules, regulations, and orders.<br>(7) In the event of the contractor's noncompliance with the nondiscrimination clauses of this contract or with any of the said rules, regulations, or orders, this contract may be canceled, terminated, or suspended in whole or in part and the contractor may be declared ineligible for further Government contracts or federally assisted construction contracts in accordance with procedures authorized in Executive Order 11246 of September 24, 1965, and such other sanctions may be imposed and remedies invoked as provided in Executive Order 11246 of September 24, 1965, or by rule, regulation, or order of the Secretary of Labor, or as otherwise provided by law.<br>(8) The contractor will include the portion of the sentence immediately preceding paragraph (1) and the provisions of paragraphs (1) through (8) in every subcontract or purchase order unless exempted by rules, regulations, or orders of the Secretary of Labor issued pursuant to section 204 of Executive Order 11246 of September 24, 1965, so that such provisions will be binding upon each subcontractor or vendor. The contractor will take such action with respect to any subcontract or purchase order as the administering agency may direct as a means of enforcing such provisions, including sanctions for noncompliance:<br>Provided, however, that in the event a contractor becomes involved in, or is threatened with, litigation with a subcontractor or vendor as a result of such direction by the administering agency, the contractor may request the United States to enter into such litigation to protect the interests of the United States.<br>The [recipient] further agrees that it will be bound by the above equal opportunity clause with respect to its own employment practices when it participates in federally assisted construction work: Provided, that if the [recipient] so participating is a State or local government, the above equal opportunity clause is not applicable to any agency, instrumentality or subdivision of such government which does not participate in work on or under the contract. | | |

| THRESHOLD | PROVISION | CITATION | PROVISION APPLIES TO |
|---|---|---|---|
| | The [recipient] agrees that it will assist and cooperate actively with the administering agency and the Secretary of Labor in obtaining the compliance of contractors and subcontractors with the equal opportunity clause and the rules, regulations, and relevant orders of the Secretary of Labor, that it will furnish the administering agency and the Secretary of Labor such information as they may require for the supervision of such compliance, and that it will otherwise assist the recipient agency in the discharge of the agency's primary responsibility for securing compliance.<br><br>The recipient further agrees that it will refrain from entering into any contract or contract modification subject to Executive Order 11246 of September 24, 1965, with a contractor debarred from, or who has not demonstrated eligibility for, Government contracts and federally assisted construction contracts pursuant to the Executive Order and will carry out such sanctions and penalties for violation of the equal opportunity clause as may be imposed upon contractors and subcontractors by the administering agency or the Secretary of Labor pursuant to Part II, Subpart D of the Executive Order. In addition, the [recipient] agrees that if it fails or refuses to comply with these undertakings, the administering agency may take any or all of the following actions: cancel, terminate, or suspend in whole or in part this grant (contract, loan, insurance, guarantee); refrain from extending any further assistance to the [recipient] under the program with respect to which the failure or refund occurred until satisfactory assurance of future compliance has been received from such [recipient]; and refer the case to the Department of Justice for appropriate legal proceedings. | | |
| >$10,000,000 for ARPA but State Provision Applies at any amount and/or<br><br>>$2,000 for CDBG/Braided Funds Projects<br><br>See TX Prevailing Wage Laws | Davis-Bacon Act, as amended (40 U.S.C. 3141-3148). When required by Federal program legislation, all prime construction contracts in excess of $10,000,00 awarded by Non-Federal entities must include a provision for compliance with the Davis-Bacon Act (40 U.S.C. 3141-3144, and 3146-3148) as supplemented by Department of Labor regulations (29 CFR Part 5, "Labor Standards Provisions Applicable to Contracts Covering Federally Financed and Assisted Construction"). In accordance with the statute, contractors must be required to pay wages to laborers and mechanics at a rate not less than the prevailing wages specified in a wage determination made by the Secretary of Labor. In addition, contractors must be required to pay wages not less than once a week. The Non-Federal entity must place a copy of the current prevailing wage determination issued by the Department of Labor in each solicitation. The decision to award a contract or subcontract must be conditioned upon the acceptance of the wage determination. The Non-Federal entity must report all suspected or reported violations to the Federal awarding agency.<br><br>The contracts must also include a provision for compliance with the Copeland "Anti-Kickback" Act (40 U.S.C. 3145), as supplemented by Department of Labor regulations (29 CFR Part 3, "Contractors and Subcontractors on Public Building or Public Work Financed in Whole or in Part by Loans or Grants from the United States"). The Act provides that each contractor or subrecipient must be prohibited from inducing, by any means, any person employed in the construction, completion, or repair of public work, to give up any part of the compensation to which he or she is otherwise entitled. The Non-Federal entity must report all suspected or reported violations to the Federal awarding agency. | 2 CFR 200 APPENDIX II (D) | Contractor RFP/IFB<br><br>Subrecipients |
| >$100,000 | Contract Work Hours and Safety Standards Act (40 U.S.C. 3701-3708). Where applicable, all contracts awarded by the Non-Federal entity in excess of $100,000 that involve the employment of mechanics or laborers must include a provision for compliance with 40 U.S.C. 3702 and 3704, as supplemented by Department of Labor regulations (29 CFR Part 5). Under 40 U.S.C. 3702 of the Act, each contractor must be required to compute the wages of every mechanic and laborer on the basis of a standard work week of 40 hours. Work in excess of the standard work week is permissible provided that the worker is compensated at a rate of not less than one and a half times the basic rate of pay for all hours worked in excess of 40 hours in the work week. The requirements of 40 U.S.C. 3704 are applicable to construction work and provide that no laborer or mechanic must be required to work in surroundings | 2 CFR 200 APPENDIX II (E) | Contractor RFP/IFB<br><br>Subrecipients |

| THRESHOLD | PROVISION | CITATION | PROVISION APPLIES TO |
|---|---|---|---|
| | or under working conditions which are unsanitary, hazardous, or dangerous. These requirements do not apply to the purchases of supplies or materials or articles ordinarily available on the open market, or contracts for transportation or transmission of intelligence. | | |
| None | Rights to Inventions Made Under a Contract or Agreement. If the Federal award meets the definition of "funding agreement" under 37 CFR § 401.2 (a) and the recipient or subrecipient wishes to enter into a contract with a small business firm or nonprofit organization regarding the substitution of parties, assignment or performance of experimental, developmental, or research work under that "funding agreement," the recipient or subrecipient must comply with the requirements of 37 CFR Part 401, "Rights to Inventions Made by Nonprofit Organizations and Small Business Firms Under Government Grants, Contracts and Cooperative Agreements," and any implementing regulations issued by the awarding agency. | 2 CFR 200 APPENDIX II (F) | Contractor RFP/IFB<br>Contractor RFQ<br>Subrecipients |
| >$150,000 | Clean Air Act (42 U.S.C. 7401-7671q.) and the Federal Water Pollution Control Act (33 U.S.C. 1251-1387), as amended – Contracts and subgrants of amounts in excess of $150,000 must contain a provision that requires the Non-Federal award to agree to comply with all applicable standards, orders or regulations issued pursuant to the Clean Air Act (42 U.S.C. 7401-7671q) and the Federal Water Pollution Control Act as amended (33 U.S.C. 1251-1387). Violations must be reported to the Federal awarding agency and the Regional Office of the Environmental Protection Agency (EPA). | 2 CFR 200 APPENDIX II (G) | Contractor RFP/IFB<br>Contractor RFQ<br>Subrecipients |
| >$25,000 | Debarment and Suspension (Executive Orders 12549 and 12689) – A contract award (see 2 CFR 180.220) must not be made to parties listed on the governmentwide exclusions in the System for Award Management (SAM), in accordance with the OMB guidelines at 2 CFR 180 that implement Executive Orders 12549 (3 CFR part 1986 Comp., p. 189) and 12689 (3 CFR part 1989 Comp., p. 235), "Debarment and Suspension." SAM Exclusions contains the names of parties debarred, suspended, or otherwise excluded by agencies, as well as parties declared ineligible under statutory or regulatory authority other than Executive Order 12549. | 2 CFR 200 APPENDIX II (H) | Contractor RFP/IFB<br>Contractor RFQ<br>Subrecipients<br>Vendors |
| >$100,000 | Byrd Anti-Lobbying Amendment (31 U.S.C. 1352) – Contractors that apply or bid for an award exceeding $100,000 must file the required certification. Each tier certifies to the tier above that it will not and has not used Federal appropriated funds to pay any person or organization for influencing or attempting to influence an officer or employee of any agency, a member of Congress, officer or employee of Congress, or an employee of a member of Congress in connection with obtaining any Federal contract, grant or any other award covered by 31 U.S.C. 1352. Each tier must also disclose any lobbying with Non-Federal funds that takes place in connection with obtaining any Federal award. Such disclosures are forwarded from tier to tier up to the Non-Federal award. | 2 CFR 200 APPENDIX II (I) and 24 CFR §570.303 | Contractor RFP/IFB<br>Contractor RFQ<br>Subrecipients |

| THRESHOLD | PROVISION | CITATION | PROVISION APPLIES TO |
|---|---|---|---|
| | See 2 CFR §200.323 - Procurement of Recovered Materials.<br><br>Where applicable, in the performance of contract, pursuant to 2 CFR 200.323, the contractor must comply with section 6002 of the Solid Waste Disposal Act, as amended by the Resource Conservation and Recovery Act. The requirements of Section 6002 include procuring only items designated in guidelines of the Environmental Protection Agency (EPA) at 40 CFR part 247 that contain the highest percentage of recovered materials practicable, consistent with maintaining a satisfactory level of competition, where the purchase price of the item exceeds $10,000 or the value of the quantity acquired during the preceding fiscal year exceeded $10,000; procuring solid waste management services in a manner that maximizes energy and resource recovery; and establishing an affirmative procurement program for procurement of recovered materials identified in the EPA guidelines.<br><br>To the extent that the scope of work or specifications in the contract requires the contractor to provide recovered materials the scope of work or specifications are modified to require that as follows.<br><br>i. In the performance of this contract, the Contractor shall make maximum use of products containing recovered materials that are EPA-designated items unless the product cannot be acquired—<br>1. Competitively within a timeframe providing for compliance with the contract performance schedule;<br>2. Meeting contract performance requirements; or<br>3. At a reasonable price.<br>ii. Information about this requirement, along with the list of EPA-designated items, is available at EPA's Comprehensive Procurement Guidelines web site, https://www.epa.gov/smm/comprehensive-procurement-guideline-cpg-program.<br>iii. The Contractor also agrees to comply with all other applicable requirements of Section 6002 of the "Solid Waste Disposal Act." | 2 CFR 200<br>APPENDIX II (J) | Contractor RFP/IFB<br>Contractor RFQ<br>Subrecipients |
| | See 2 CFR §200.216 - Prohibition on certain telecommunications and video surveillance services or equipment<br><br>(a) Recipients and subrecipients are prohibited from obligating or expending loan or grant funds to:<br>(1) Procure or obtain;<br>(2) Extend or renew a contract to procure or obtain; or<br>(3) Enter into a contract (or extend or renew a contract) to procure or obtain equipment, services, or systems that uses covered telecommunications equipment or services as a substantial or essential component of any system, or as critical technology as part of any system. As described in Public Law 115-232, section 889, covered telecommunications equipment is telecommunications equipment produced by Huawei Technologies Company or ZTE Corporation (or any subsidiary or affiliate of such entities).<br>(i) For the purpose of public safety, security of government facilities, physical security surveillance of critical infrastructure, and other national security purposes, video surveillance and telecommunications equipment produced by Hytera Communications Corporation, Hangzhou Hikvision Digital Technology Company, or Dahua Technology Company (or any subsidiary or affiliate of such entities).<br>(ii) Telecommunications or video surveillance services provided by such entities or using such equipment.<br>(iii) Telecommunications or video surveillance equipment or services produced or provided by an entity that the Secretary of Defense, in consultation with the Director of the National Intelligence or the Director of the Federal Bureau of Investigation, reasonably believes to be an entity | 2 CFR 200<br>APPENDIX II (K) | Contractor RFP/IFB<br>Contractor RFQ<br>Subrecipients |

| THRESHOLD | PROVISION | CITATION | PROVISION APPLIES TO |
|---|---|---|---|
| | owned or controlled by, or otherwise connected to, the government of a covered foreign country.<br>(b) In implementing the prohibition under Public Law 115-232, section 889, subsection (f), paragraph (1), heads of executive agencies administering loan, grant, or subsidy programs shall prioritize available funding and technical support to assist affected businesses, institutions and organizations as is reasonably necessary for those affected entities to transition from covered communications equipment and services, to procure replacement equipment and services, and to ensure that communications service to users and customers is sustained.<br>(c) See Public Law 115-232, section 889 for additional information.<br>(d) See also § 200.471. | | |
| | See 2 CFR §200.322 - Domestic Preferences for Procurements.<br><br>(a) As appropriate and to the extent consistent with law, the Non-Federal entity should, to the greatest extent practicable under a Federal award, provide a preference for the purchase, acquisition, or use of goods, products, or materials produced in the United States (including but not limited to iron, aluminum, steel, cement, and other manufactured products). The requirements of this section must be included in all subawards including all contracts and purchase orders for work or products under this award.<br><br>(b) For purposes of this section:<br>(1) "Produced in the United States" means, for iron and steel products, that all manufacturing processes, from the initial melting stage through the application of coatings, occurred in the United States.<br>(2) "Manufactured products" means items and construction materials composed in whole or in part of non-ferrous metals such as aluminum; plastics and polymer-based products such as polyvinyl chloride pipe; aggregates such as concrete; glass, including optical fiber; and lumber. | 2 CFR 200 APPENDIX II (L) | Contractor RFP/IFB<br>Contractor RFQ<br>Subrecipients |
| | **Additional 2 CFR 200 references & Other Regulations** | | |
| None | The Federal awarding agency must establish conflict of interest policies for Federal awards. The Non-Federal entity must disclose in writing any potential conflict of interest to the Federal awarding agency or pass-through entity in accordance with applicable Federal awarding agency policy. | 2 CFR 200.112 | Contractor RFP/IFB<br>Contractor RFQ<br>Subrecipients |
| None | Contracting with HUB, small and minority businesses, women's business enterprises, and labor surplus area firms.<br>(a) The Non-Federal entity must take all necessary affirmative steps to assure that minority businesses, women's business enterprises, and labor surplus area firms are used when possible.<br>(b) Affirmative steps must include:<br>(1) Placing qualified small and minority businesses and women's business enterprises on solicitation lists;<br>(2) Assuring that small and minority businesses, and women's business enterprises are solicited whenever they are potential sources;<br>(3) Dividing total requirements, when economically feasible, into smaller tasks or quantities to permit maximum participation by small and minority businesses, and women's business enterprises;<br>(4) Establishing delivery schedules, where the requirement permits, which encourage participation by small and minority businesses, and women's | 2 CFR 200.321 | Contractor RFP/IFB<br>Contractor RFQ<br>Subrecipients |

| THRESHOLD | PROVISION | CITATION | PROVISION APPLIES TO |
|---|---|---|---|
| | business enterprises;<br>(5) Using the services and assistance, as appropriate, of such organizations as the Small Business Administration and the Minority Business Development Agency of the Department of Commerce; and<br>(6) Requiring the prime contractor, if subcontracts are to be let, to take the affirmative steps listed in paragraphs (b)(1) through (5) of this section. | | |
| >$10,000 | An NFE (Non-Federal Entity) that is a state agency or an agency of a political subdivision of a state, and the NFE's contractors must comply with Section 6002 of the Solid Waste Disposal Act.<br>Applicable NFEs must include a contract provision requiring compliance with this requirement.<br>This includes contracts awarded by a state agency or political subdivision of a state and its contractors for certain items, as designated by the EPA, with a purchase price greater than $10,000.<br>Indian Tribal Governments and nonprofit organizations are not required to comply with this provision. Additional requirements are listed below. | 2 CFR 200.323 | Contractor RFP/IFB<br>Contractor RFQ<br>Subrecipients |
| None | Financial records, supporting documents, statistical records, and all other Non-Federal entity records pertinent to a Federal award must be retained for a period of three years from the date of submission of the final expenditure report or, for Federal awards that are renewed quarterly or annually, from the date of the submission of the quarterly or annual financial report, respectively, as reported to the Federal awarding agency or pass-through entity in the case of a subrecipient. Federal awarding agencies and pass-through entities must not impose any other record retention requirements upon Non-Federal entities. **All records related to ARPA shall be maintained for 5 years per the ARPA terms, conditions, and regulations.** The only exceptions are the following:<br>(a) If any litigation, claim, or audit is started before the expiration of the 3-year period, the records must be retained until all litigation, claims, or audit findings involving the records have been resolved and final action taken. **All records related to ARPA shall be maintained for 5 years per the ARPA terms, conditions, and regulations.**<br>(b) When the Non-Federal entity is notified in writing by the Federal awarding agency, cognizant agency for audit, oversight agency for audit, cognizant agency for indirect costs, or pass-through entity to extend the retention period.<br>(c) Records for real property and equipment acquired with Federal funds must be retained for 3 years after final disposition. All records related to ARPA shall be maintained for 5 years per the ARPA terms and conditions and regulations.<br>(d) When records are transferred to or maintained by the Federal awarding agency or pass-through entity, the 3-year retention requirement is not applicable to the Non-Federal entity All records related to ARPA shall be maintained for 5 years per the ARPA terms and conditions and regulations. **All records related to ARPA shall be maintained for 5 years per the ARPA terms, conditions, and regulations.**<br>(e) Records for program income transactions after the period of performance. In some cases, recipients must report program income after the period of performance. Where there is such a requirement, the retention period for the records pertaining to the earning of the program income starts from the end of the Non-Federal entity's fiscal year in which the program income is earned.<br>(f) Indirect cost rate proposals and cost allocations plans. This paragraph applies to the following types of documents and their supporting records: Indirect cost rate computations or proposals, cost allocation plans, and any similar accounting computations of the rate at which a particular group of costs is chargeable (such as computer usage chargeback rates or composite fringe benefit rates).<br>(1) *If submitted for negotiation.* If the proposal, plan, or other computation is | 2 CFR 200.334 | Contractor RFP/IFB<br>Contractor RFQ<br>Subrecipients<br>Vendors |

| THRESHOLD | PROVISION | CITATION | PROVISION APPLIES TO |
|---|---|---|---|
| | required to be submitted to the Federal Government (or to the pass-through entity) to form the basis for negotiation of the rate, then the 3-year retention period for its supporting records starts from the date of such submission. **All records related to ARPA shall be maintained for 5 years per the ARPA terms, conditions, and regulations.**<br><br>(2) *If not submitted for negotiation.* If the proposal, plan, or other computation is not required to be submitted to the Federal Government (or to the pass-through entity) for negotiation purposes, then the 3-year retention period for the proposal, plan, or computation and its supporting records starts from the end of the fiscal year (or other accounting period) covered by the proposal, plan, or other computation. **All records related to ARPA shall be maintained for 5 years per the ARPA terms, conditions, and regulations.** | | |
| None | The Federal awarding agency and the Non-Federal entity should, whenever practicable, collect, transmit, and store Federal award-related information in open and machine-readable formats rather than in closed formats or on paper in accordance with applicable legislative requirements. A machine-readable format is a format in a standard computer language (not English text) that can be read automatically by a web browser or computer system. The Federal awarding agency or pass-through entity must always provide or accept paper versions of Federal award-related information to and from the Non-Federal entity upon request. If paper copies are submitted, the Federal awarding agency or pass-through entity must not require more than an original and two copies. When original records are electronic and cannot be altered, there is no need to create and retain paper copies. When original records are paper, electronic versions may be substituted through the use of duplication or other forms of electronic media provided that they are subject to periodic quality control reviews, provide reasonable safeguards against alteration, and remain readable. | 2 CFR 200.336 | Contractor RFP/IFB<br>Contractor RFQ<br>Subrecipients |
| None | CONTRACTS WITH COMPANIES ENGAGED IN BUSINESS WITH IRAN, SUDAN, OR FOREIGN TERRORIST ORGANIZATION PROHIBITED. A governmental entity may not enter into a governmental contract with a company that is identified on a list prepared and maintained under Section 806.051, 807.051, or 2252.153. The term "foreign terrorist organization" in this paragraph has the meaning assigned to such a term in Section 2252.151(2) of the Texas Government Code. | Texas Government Code 2252.152 | Contractor RFP/IFB<br>Contractor RFQ<br>Subrecipients |
| >$100,000 | PROVISION REQUIRED IN CONTRACT.<br><br>(a) This section applies only to a contract that:<br>(1) is between a governmental entity and a company with 10 or more full-time employees; and<br>(2) has a value of $100,000 or more that is to be paid wholly or partly from public funds of the governmental entity.<br>(b) A governmental entity may not enter into a contract with a company for goods or services unless the contract contains a written verification from the company that it:<br>(1) does not boycott Israel; and<br><br>(2) will not boycott Israel during the term of the contract. | Texas Government Code 2271 | Contractor RFP/IFB<br>Contractor RFQ<br>Subrecipients<br>Vendors |
| For Critical Infrastructure Projects | PROHIBITION ON CONTRACTS WITH CERTAIN FOREIGN-OWNED COMPANIES IN CONNECTION WITH CRITICAL INFRASTRUCTURE.<br><br>PROHIBITED CONTRACTS.<br><br>(a) A governmental entity may not enter into a contract or other agreement relating to critical infrastructure in this state with a company:<br><br>(1) if, under the contract or other agreement, the company would be granted direct or remote access to or control of critical infrastructure in this state, excluding access specifically allowed by the governmental entity for product | Texas Government Code, Title 10, Subtitle F, Chapter 2274.0102 | Subrecipients<br>EC 6.1 Awardees |

| THRESHOLD | PROVISION | CITATION | PROVISION APPLIES TO |
|---|---|---|---|
| | warranty and support purposes; and<br>(2) if the governmental entity knows that the company is:<br>(A) owned by or the majority of stock or other ownership interest of the company is held or controlled by:<br>(i) individuals who are citizens of China, Iran, North Korea, Russia, or a designated country; or<br>(ii) a company or other entity, including a governmental entity, that is owned or controlled by citizens of or is directly controlled by the government of China, Iran, North Korea, Russia, or a designated country; or<br>(B) headquartered in China, Iran, North Korea, Russia, or a designated country.<br>(b) The prohibition described by Subsection (a) applies regardless of whether:<br>(1) the company's or its parent company's securities are publicly traded; or<br>(2) the company or its parent company is listed on a public stock exchange as:<br>(A) a Chinese, Iranian, North Korean, or Russian company; or<br>(B) a company of a designated country. | | |
| None | Mandatory standards and policies relating to energy efficiency which are contained in the state energy conservation plan issued in compliance with the Energy Policy and Conservation Act. | 42 U.S.C. 6201 | Contractor RFP/IFB<br>Subrecipients |
| None | The Firm agrees that no otherwise qualified individual with disabilities shall, solely by reason of his/her disability, be denied the benefits of, or be subjected to discrimination, including discrimination in employment, under any program or activity receiving federal financial assistance. | Section 504 of the Rehabilitation Act of 1973, as amended. | Subrecipients |
| | **ARPA Terms & Conditions** | | |
| ARPA Terms, Conditions, & Records | 1. Use of Funds.<br>a. Recipient understands and agrees that the funds disbursed under this award may only be used in compliance with section 603(c) of the Social Security Act (the Act), Treasury's regulations implementing that section, and guidance issued by Treasury regarding the foregoing.<br>b. Recipient will determine prior to engaging in any project using this assistance that it has the institutional, managerial, and financial capability to ensure proper planning, management, and completion of such project. | Section 9901 of the American Rescue Plan Act, Pub. L. No. 117-2;<br>Section 602(b), 603(b) and/or 603(c) as applicable | Subrecipients |
| ARPA Terms, Conditions, & Records | 2. Period of Performance. The period of performance for this award begins on the date hereof and ends on December 31, 2026. As set forth in Treasury's implementing regulations, Recipients may use award funds to cover eligible costs incurred during the period that begins on March 3, 2021, and ends on December 31, 2024. | Section 9901 of the American Rescue Plan Act, Pub. L. No. 117-2;<br>Section 602(b), 603(b) and/or 603(c) as applicable | Subrecipients |
| ARPA Terms, Conditions, & Records | 3. Reporting. Recipient agrees to comply with any reporting obligations established by Treasury as they relate to this award. | Section 9901 of the American Rescue Plan Act, Pub. L. No. 117-2;<br>Section 602(b), 603(b) and/or 603(c) as applicable | Subrecipients |

| THRESHOLD | PROVISION | CITATION | PROVISION APPLIES TO |
|---|---|---|---|
| ARPA Terms, Conditions, & Records | 4. Maintenance of and Access to Records<br>a. Recipient shall maintain records and financial documents sufficient to evidence compliance with section 603(c) of the Act, Treasury's regulations implementing that section, and guidance issued by Treasury regarding the foregoing.<br>b. The Treasury Office of Inspector General and the Government Accountability Office, or their authorized representatives, shall have the right of access to records (electronic and otherwise) of Recipient in order to conduct audits or other investigations.<br>c. Records shall be maintained by Recipient for a period of five (5) years after all funds have been expended or returned to Treasury, whichever is later. | Section 9901 of the American Rescue Plan Act, Pub. L. No. 117-2;<br>Section 602(b), 603(b) and/or 603(c) as applicable | Contractor RFP/IFB<br>Contractor RFQ<br>Subrecipients<br>Vendors |
| ARPA Terms, Conditions, & Records | 5. Pre-award Costs. Pre-award costs, as defined in 2 CFR § 200.458, may not be paid with funding from this award. | Section 9901 of the American Rescue Plan Act, Pub. L. No. 117-2;<br>Section 602(b), 603(b) and/or 603(c) as applicable | Subrecipients |
| ARPA Terms, Conditions, & Records | 6. Administrative Costs. Recipient may use funds provided under this award to cover both direct and indirect costs. | Section 9901 of the American Rescue Plan Act, Pub. L. No. 117-2;<br>Section 602(b), 603(b) and/or 603(c) as applicable | Subrecipients |
| ARPA Terms, Conditions, & Records | 7. Cost Sharing. Cost sharing or matching funds are not required to be provided by Recipient. | Section 9901 of the American Rescue Plan Act, Pub. L. No. 117-2;<br>Section 602(b), 603(b) and/or 603(c) as applicable | Subrecipients |
| ARPA Terms, Conditions, & Records | 8. Conflicts of Interest. Recipient understands and agrees it must maintain a conflict of interest policy consistent with 2 CFR § 200.318(c) and that such conflict of interest policy is applicable to each activity funded under this award. Recipient and subrecipients must disclose in writing to Treasury or the pass-through entity, as appropriate, any potential conflict of interest affecting the awarded funds in accordance with 2 CFR § 200.112. | Section 9901 of the American Rescue Plan Act, Pub. L. No. 117-2;<br>Section 602(b), 603(b) and/or 603(c) as applicable | Contractor RFP/IFB<br>Contractor RFQ<br>Subrecipients<br>Vendors |
| ARPA Terms, Conditions, & Records | 9. Compliance with Applicable Law and Regulations.<br>a. Recipient agrees to comply with the requirements of section 603 of the Act, regulations adopted by Treasury pursuant to section 603(f) of the Act, and guidance issued by Treasury regarding the foregoing. Recipient also agrees to comply with all other applicable federal statutes, regulations, and executive orders, and Recipient shall provide for such compliance by other parties in any agreements it enters into with other parties relating to this award.<br>b. Federal regulations applicable to this award include, without limitation, the following:<br>i. Uniform Administrative Requirements, Cost Principles, and Audit Requirements for Federal Awards, 2 CFR Part 200, other than such provisions as Treasury may determine are inapplicable to this Award and subject to such exceptions as may be otherwise provided by Treasury. Subpart F – Audit Requirements of the Uniform Guidance, implementing the Single Audit Act, shall apply to this award.<br>ii. Universal Identifier and System for Award Management (SAM), 2 CFR Part 25, pursuant to which the award term set forth in Appendix A to 2 CFR Part 25 is | Section 9901 of the American Rescue Plan Act, Pub. L. No. 117-2;<br>Section 602(b), 603(b) and/or 603(c) as applicable | Contractor RFP/IFB<br>Contractor RFQ<br>Subrecipients<br>Vendors |

| THRESHOLD | PROVISION | CITATION | PROVISION APPLIES TO |
|---|---|---|---|
| | hereby incorporated by reference.<br>iii. Reporting Subaward and Executive Compensation Information, 2 CFR Part 170, pursuant to which the award term set forth in Appendix A to 2 CFR Part 170 is hereby incorporated by reference.<br>iv. OMB Guidelines to Agencies on Governmentwide Debarment and Suspension (Non-procurement), 2 CFR Part 180, including the requirement to include a term or condition in all lower tier covered transactions (contracts and subcontracts described in 2 CFR Part 180, subpart B) that the award is subject to 2 CFR Part 180 and Treasury's implementing regulation at 31 CFR Part 19.<br>v. Recipient Integrity and Performance Matters, pursuant to which the award term set forth in 2 CFR Part 200, Appendix XII to Part 200 is hereby incorporated by reference.<br>vi. Governmentwide Requirements for Drug-Free Workplace, 31 CFR Part 20.<br>vii. New Restrictions on Lobbying, 31 CFR Part 21.<br>viii. Uniform Relocation Assistance and Real Property Acquisitions Act of 1970 (42 U.S.C. §§ 4601-4655) and implementing regulations.<br>ix. Generally applicable federal environmental laws and regulations.<br><br>c. Statutes and regulations prohibiting discrimination applicable to this award include, without limitation, the following:<br>i. Title VI of the Civil Rights Act of 1964 (42 U.S.C. §§ 2000d et seq.) and Treasury's implementing regulations at 31 CFR Part 22, which prohibit discrimination on the basis of race, color, or national origin under programs or activities receiving federal financial assistance;<br>ii. The Fair Housing Act, Title VIII of the Civil Rights Act of 1968 (42 U.S.C. §§ 3601 et seq.), which prohibits discrimination in housing on the basis of race, color, religion, national origin, sex, familial status, or disability;<br>iii. Section 504 of the Rehabilitation Act of 1973, as amended (29 U.S.C. § 794), which prohibits discrimination on the basis of disability under any program or activity receiving federal financial assistance;<br>iv. The Age Discrimination Act of 1975, as amended (42 U.S.C. §§ 6101 et seq.), and Treasury's implementing regulations at 31 CFR Part 23, which prohibit discrimination on the basis of age in programs or activities receiving federal financial assistance; and<br>v. Title II of the Americans with Disabilities Act of 1990, as amended (42 U.S.C. §§ 12101 et seq.), which prohibits discrimination on the basis of disability under programs, activities, and services provided or made available by state and local governments or instrumentalities or agencies thereto. | | |
| ARPA Terms, Conditions, & Records | 10. Remedial Actions. In the event of Recipient's noncompliance with section 603 of the Act, other applicable laws, Treasury's implementing regulations, guidance, or any reporting or other program requirements, Treasury may impose additional conditions on the receipt of a subsequent tranche of future award funds, if any, or take other available remedies as set forth in 2 CFR § 200.339. In the case of a violation of section 603(c) of the Act regarding the use of funds, previous payments shall be subject to recoupment as provided in section 603(e) of the Act. | Section 9901 of the American Rescue Plan Act, Pub. L. No. 117-2;<br>Section 602(b), 603(b) and/or 603(c) as applicable | Subrecipients |
| ARPA Terms, Conditions, & Records | 11. Hatch Act. Recipient agrees to comply, as applicable, with requirements of the Hatch Act (5 U.S.C. §§ 1501-1508 and 7324-7328), which limit certain political activities of State or local government employees whose principal employment is in connection with an activity financed in whole or in part by this federal assistance. | Section 9901 of the American Rescue Plan Act, Pub. L. No. 117-2;<br>Section 602(b), 603(b) and/or 603(c) as applicable | Subrecipients |
| ARPA Terms, Conditions, & Records | 12. False Statements. Recipient understands that making false statements or claims in connection with this award is a violation of federal law and may result in criminal, civil, or administrative sanctions, including fines, imprisonment, civil damages and penalties, debarment from participating in federal awards or | Section 9901 of the American Rescue Plan Act, Pub. L. No. 117-2; | Contractor RFP/IFB<br>Contractor RFQ<br>Subrecipients<br>Vendors |

| THRESHOLD | PROVISION | CITATION | PROVISION APPLIES TO |
|---|---|---|---|
| | contracts, and/or any other remedy available by law. | Section 602(b), 603(b) and/or 603(c) as applicable | |
| ARPA Terms, Conditions, & Records | 13. Publications. Any publications produced with funds from this award must display the following language: "This project [is being] [was] supported, in whole or in part, by federal award number [enter project FAIN] awarded to [name of Recipient] by the U.S. Department of the Treasury." | Section 9901 of the American Rescue Plan Act, Pub. L. No. 117-2; Section 602(b), 603(b) and/or 603(c) as applicable | Subrecipients |
| ARPA Terms, Conditions, & Records | 14. Debts Owed the Federal Government.<br>a. Any funds paid to Recipient (1) in excess of the amount to which Recipient is finally determined to be authorized to retain under the terms of this award; (2) that are determined by the Treasury Office of Inspector General to have been misused; or (3) that are determined by Treasury to be subject to a repayment obligation pursuant to section 603(e) of the Act and have not been repaid by Recipient shall constitute a debt to the federal government.<br>b. Any debts determined to be owed the federal government must be paid promptly by Recipient. A debt is delinquent if it has not been paid by the date specified in Treasury's initial written demand for payment, unless other satisfactory arrangements have been made or if the Recipient knowingly or improperly retains funds that are a debt as defined in paragraph 14(a). Treasury will take any actions available to it to collect such a debt. | Section 9901 of the American Rescue Plan Act, Pub. L. No. 117-2; Section 602(b), 603(b) and/or 603(c) as applicable | Subrecipients |
| ARPA Terms, Conditions, & Records | 15. Disclaimer.<br>a. The United States expressly disclaims any and all responsibility or liability to Recipient or third persons for the actions of Recipient or third persons resulting in death, bodily injury, property damages, or any other losses resulting in any way from the performance of this award or any other losses resulting in any way from the performance of this award or any contract, or subcontract under this award.<br>b. The acceptance of this award by Recipient does not in any way establish an agency relationship between the United States and Recipient. | Section 9901 of the American Rescue Plan Act, Pub. L. No. 117-2; Section 602(b), 603(b) and/or 603(c) as applicable | Subrecipients |
| ARPA Terms, Conditions, & Records | 16. Protections for Whistleblowers.<br>a. In accordance with 41 U.S.C. § 4712, Recipient may not discharge, demote, or otherwise discriminate against an employee in reprisal for disclosing to any of the list of persons or entities provided below, information that the employee reasonably believes is evidence of gross mismanagement of a federal contract or grant, a gross waste of federal funds, an abuse of authority relating to a federal contract or grant, a substantial and specific danger to public health or safety, or a violation of law, rule, or regulation related to a federal contract (including the competition for or negotiation of a contract) or grant.<br>b. The list of persons and entities referenced in the paragraph above includes the following:<br>i. A member of Congress or a representative of a committee of Congress;<br>ii. An Inspector General;<br>iii. The Government Accountability Office;<br>iv. A Treasury employee responsible for contract or grant oversight or management;<br>v. An authorized official of the Department of Justice or other law enforcement agency;<br>vi. A court or grand jury; or<br>vii. A management official or other employee of Recipient, contractor, or subcontractor who has the responsibility to investigate, discover, or address misconduct. | Section 9901 of the American Rescue Plan Act, Pub. L. No. 117-2; Section 602(b), 603(b) and/or 603(c) as applicable | Contractor RFP/IFB<br>Contractor RFQ<br>Subrecipients<br>Vendors |

| THRESHOLD | PROVISION | CITATION | PROVISION APPLIES TO |
|---|---|---|---|
| | c. Recipient shall inform its employees in writing of the rights and remedies provided under this section, in the predominant native language of the workforce. | | |
| ARPA Terms, Conditions, & Records | 17. Increasing Seat Belt Use in the United States. Pursuant to Executive Order 13043, 62 FR 19217 (Apr. 18, 1997), Recipient should encourage its contractors to adopt and enforce on-the-job seat belt policies and programs for their employees when operating company-owned, rented or personally owned vehicles. | Section 9901 of the American Rescue Plan Act, Pub. L. No. 117-2; Section 602(b), 603(b) and/or 603(c) as applicable | Contractor RFP/IFB<br>Contractor RFQ<br>Subrecipients<br>Vendors |
| ARPA Terms, Conditions, & Records | 18. Reducing Text Messaging While Driving. Pursuant to Executive Order 13513, 74 FR 51225 (Oct. 6, 2009), Recipient should encourage its employees, subrecipients, and contractors to adopt and enforce policies that ban text messaging while driving, and Recipient should establish workplace safety policies to decrease accidents caused by distracted drivers | Section 9901 of the American Rescue Plan Act, Pub. L. No. 117-2; Section 602(b), 603(b) and/or 603(c) as applicable | Contractor RFP/IFB<br>Contractor RFQ<br>Subrecipients<br>Vendors |

# EXHIBIT C – OTHER RELEVANT INFORMATION/SPECIAL CONDITIONS

Attach any relevant specifications, e.g., municipal/state code specifications, etc., that will be applicable to this purchase.

# ATTACHMENTS

**THE FOLLOWING DOCUMENTS MUST BE COMPLETED AND INCLUDED IN THE RESPONSE PACKAGE:**

| | | |
|---|---|---|
| 1. | ATTACHMENT A | SIGNED SOLICITATION RESPONSE COVER SHEET/ACKNOWLEDGEMENT OF ADDENDA/SUBMISSION CHECKLIST |
| 2. | ATTACHMENT B | PRICING SHEET |
| 3. | ATTACHMENT C | SYSTEM FOR AWARD MANAGEMENT (SAM.GOV) RECORD SEARCH |
| 4. | ATTACHMENT D | CUSTOMER/CLIENT REFERENCES |
| 5. | ATTACHMENT E | CERTIFICATE OF INSURANCE (IF APPLICABLE) |
| 6. | ATTACHMENT F | ETHICS AND CONFLICT OF INTEREST ACKNOWLEDGEMENT |
| 7. | ATTACHMENT G | STATEMENT OF CONFLICT OF INTEREST (IF ANY) |
| 8. | ATTACHMENT H | CONFLICT OF INTEREST QUESTIONNAIRE (FORM CIQ) |
| 9. | ATTACHMENT I | DISCLOSURE OF LOBBYING ACTIVITIES SF-LLL CERTIFICATION |
| 10. | ATTACHMENT J | TEXAS ETHICS COMMISSION CERTIFICATE OF INTERESTED PARTIES (FORM 1295) |
| 11. | ATTACHMENT K | BIDDER'S CERTIFICATION |
| 12. | ATTACHMENT L | NON-COLLUSION AFFIDAVIT |

# ATTACHMENT A:

## SOLICITATION RESPONSE COVER SHEET/ACKNOWLEDGMENT OF ADDENDA/SUBMISSION CHECKLIST

| | |
|---|---|
| **Title of Solicitation:** | |
| **Name of Respondent:** | |
| **Company:** | |
| **Mailing Address:** | |
| **City, State, Zip:** | |
| **Phone Number:** | |
| **Company Contact Email Address:** | |
| **Texas Vendor ID Number:** | |
| **EIN/Federal Tax Identification Number:** | |

**ACKNOWLEDGEMENT OF ADDENDA**

| ADDENDUM NO. | DATE ISSUED |
|---|---|
| | |
| | |
| | |
| | |

☐ Please check this box if no addenda were issued.

# ATTACHMENT A (CONTINUED)

## SOLICITATION RESPONSE COVER SHEET/ACKNOWLEDGMENT OF ADDENDA/ SUBMISSION CHECKLIST

This checklist is provided for the Respondent's use in assuring compliance with required documentation; however, it does not include all specification requirements and does not relieve the Respondent of the need to read and comply with the specifications. Your submittal of the documents attests to the fact that you have read and/or included the documents with your response.

**SUBMISSION CHECKLIST**

| CHECK FOR COMPLETION | DOCUMENTS REQUIRED FOR SUBMISSION |
|---|---|
| ☐ | A. Solicitation Response Cover Sheet/Acknowledgement of Addenda/Submission Checklist |
| ☐ | B. Pricing Sheet |
| ☐ | C. System for Award Management (SAM.gov) Record Search |
| ☐ | D. Customer/Client References |
| ☐ | E. Certificate of Insurance (if applicable) |
| ☐ | F. Ethics and Conflict of Interest Acknowledgement |
| ☐ | G. Statement of Conflicts of Interest (if any) |
| ☐<br>☐ | H. Conflict of Interest Questionnaire (Form CIQ)<br>Please check this box if the Respondent does not identify a conflict of interest and therefore, will not be submitting the Conflict of Interest Questionnaire Form CIQ. |
| ☐<br>☐ | I. Disclosure of Lobbying Activities SF-LLL Certification<br>(Required for all proposals exceeding $100,000)<br>Please check this box if the proposal does not exceed $100,000. |
| N/A | J. Texas Ethics Commission Certificate of Interested Parties (Form 1295)<br>(This is a sample and is only required to be completed by the Respondent selected for award.) |
| ☐ | K. Bidder's Certification |
| ☐ | L. Non-Collusion Affidavit |
| ☐ | |
| ☐ | |

The Respondent's authorized agent must sign this document to acknowledge having read this solicitation carefully and completely, including the list of addenda, and that the information submitted is true and correct.

| | |
|---|---|
| **AUTHORIZED AGENT NAME:** | |
| **AUTHORIZED SIGNATURE:** | |
| **TITLE OF AUTHORIZED AGENT:** | |
| **DATE OF SIGNATURE:** | |

## ATTACHMENT B: PRICING SHEET

Respondent shall complete and submit the following pricing sheet with the proposal response package. The Entity reserves the right to make an award on the basis of best value in the interest of the Entity. ALL PRICING MUST BE FIRM FIXED PRICING.

| ITEM | DESCRIPTION | QUANTITY | UNIT OF MEASURE | UNIT PRICE | EXTENSION |
|---|---|---|---|---|---|
| **1** | Entity should enter the description and quantity of the services/products as contained in the Scope of Work in Exhibit A | | | $ | $ |
| **2** | | | | $ | $ |
| **3** | | | | $ | $ |
| **4** | | | | $ | $ |
| **5** | | | | $ | $ |
| **TOTAL FIRM FIXED PRICE** | | | | | $ |
| **6** | **DELIVERY** – Number of calendar days for delivery after receipt of the order: | | | 90 calendar days | |

| | |
|---|---|
| Name of Firm: | |
| RFP #: | |
| RFP Name: | |

### AUTHORIZED AGENT – SIGNATURE AND CONTACT INFORMATION

The Respondent's authorized agent must sign this document to acknowledge they read this solicitation carefully and completely, and the information submitted is true and correct.

| | |
|---|---|
| **SIGNATURE OF AUTHORIZED AGENT:** | |
| **PRINTED NAME OF AUTHORIZED AGENT:** | |
| **TITLE OF AUTHORIZED AGENT:** | |
| **DATE OF SIGNATURE:** | |

## ATTACHMENT C: SYSTEM FOR AWARD MANAGEMENT (SAM.GOV) RECORD SEARCH

This project is funded by Coronavirus State and Local Fiscal Recovery Funds which requires all contractors and vendors to be in good standing according to SAM.gov and the Texas State Comptroller's office.

**Verification of SAM.gov Status**

1. Respondent must not be suspended or debarred at the time of the proposal submittal. The proposal response package must include a completed Non-Debarment Certification Form located **on the next page** herein.
2. All Respondents must be pre-vetted for eligibility to perform the outlined ARPA funded scope of work. A printed screenshot from the SAM.gov website verifies whether the Vendor is excluded from contract participation at the federal level.

**Contract Award**

The ARPA Award Recipient must verify the SAM.gov status of the Respondent(s) selected for contract award prior to execution of the contract as stated in the Non-Debarment Certification Form. The final verification of the Respondent's SAM.gov status is completed prior to contract award, and in addition to the initial verification documentation provided with the proposal response submittal.

| NON-DEBARMENT CERTIFICATION FORM | | | |
|---|---|---|---|
| **COMPANY/ENTITY LEGAL NAME:** | | | |
| **STREET ADDRESS:** | | | |
| **CITY:** | **STATE:** | **ZIP:** | |
| **CONTACT NAME:** | | | |
| **CONTACT EMAIL:** | | **CONTACT PHONE:** | |
| ***UEI #** | | ****TIN #** | |

*Subrecipients are required to have a Unique Entity Identifier (UEI) Number prior to an award. All entities must be pre-vetted for eligibility/ability to perform the outlined ARPA funded scope of work and a record (PDF of SAM.gov screenshot) of SAM debarment clearance must be obtained prior to entering into any final contracts. **Beneficiary Entities are required to have UEI and/or TIN.

**APPLICABLE REGULATIONS: As stated in the ARPA/SLFRF Terms & Conditions:** *"OMB Guidelines to Agencies on Governmentwide Debarment and Suspension (Nonprocurement), 2 CFR Part 180, including the requirement to include a term or condition in all lower tier covered transactions (contracts and subcontracts described in 2 CFR Part 180, subpart B) that the award is subject to 2 CFR Part 180 and Treasury's implementing regulation at 31 CFR Part 19."*

**Also, Federal Executive Order (E.O.) 12549:** "Debarment" requires that contractors, beneficiaries or subrecipient organizations and their principals – who are receiving awards, using federal funds, are not debarred, suspended, proposed for debarment, declared ineligible, or voluntarily excluded by any federal department or agency from doing business with the federal government. By signing this document, you certify that your organization and its principals are not debarred. Failure to comply or attempts to edit this language may disqualify you from receiving or retaining funds. Information on debarment is available at the following website: www.sam.gov

**Be advised that we may pursue available remedies per 2 CFR 180.360 as an ARPA recipient entity:** *"If a federal agency later determines that you failed to tell the [awarding agency] that you were excluded or disqualified at the time you entered into the covered transaction with that person/awarding agency, the agency may pursue any available remedies, including suspension and debarment."*

| [INITIAL] | CERTIFICATION & SIGNATURE |
|---|---|
| | **We hereby certify that we are not excluded, disqualified, or debarred from receiving federally funded awards.** |
| | **We hereby confirm that if that status should change within the course of this agreement, we will provide notification immediately. Failure to do so may result in this agreement's termination and/or the repayment of funds.** |

*Your signature certifies that the information provided on this form is correct and that neither you nor your principal(s) is/are presently debarred, suspended, proposed for debarment, declared ineligible, or voluntarily excluded from participation in this transaction by any federal department or agency.*

**SIGNATURE**

**PRINTED NAME & TITLE** **DATE**

| FOR DEPARTMENT USE ONLY | | |
|---|---|---|
| SAM Debarment/Certification Record of Clearance | Yes [ ] No [ ] | Note: |
| State of Texas Debarred Vendor List Cleared | Yes [ ] No [ ] | Note: |
| Verified By: | Yes [ ] No [ ] | Date: |

## ATTACHMENT D: CUSTOMER/CLIENT REFERENCES

Respondents shall use Attachment D to describe a minimum of three (3) and maximum of five (5) references for jobs, and corresponding references, completed within last five (5) years.

**Respondent's Name:** _____

The references shall illustrate recent experience successfully completing work of a similar nature and scope as the work described in this RFP. This form may be modified as needed to comply with the requirement to document company information. ***Failure to return this attachment (or a reasonable facsimile) may result in the proposal being considered non-responsive. Failure to provide references may result in the proposal being considered non-responsive.***

**REFERENCE 1:**

| | |
|---|---|
| **Company Name:** | |
| **Company Address:** | |
| **Contact Name/Title/Phone:** | |
| **Contact Email:** | |
| **Contract Award Date:** | |
| **Contract Completion Date:** | |
| **Contract Project Name:** | |
| **Brief Description of Services:** | |

**REFERENCE 2:**

| | |
|---|---|
| **Company Name:** | |
| **Company Address:** | |
| **Contact Name/Title/Phone:** | |
| **Contact Email:** | |
| **Contract Award Date:** | |
| **Contract Completion Date:** | |
| **Contract Project Name:** | |
| **Brief Description of Services:** | |

**REFERENCE 3:**

| | |
|---|---|
| **Company Name:** | |
| **Company Address:** | |
| **Contact Name/Title/Phone:** | |
| **Contact Email:** | |
| **Contract Award Date:** | |
| **Contract Completion Date:** | |
| **Contract Project Name:** | |
| **Brief Description of Services:** | |

**REFERENCE 4:**

| | |
|---|---|
| **Company Name:** | |
| **Company Address:** | |
| **Contact Name/Title/Phone:** | |
| **Contact Email:** | |
| **Contract Award Date:** | |
| **Contract Completion Date:** | |
| **Contract Project Name:** | |
| **Brief Description of Services:** | |

**REFERENCE 5:**

| | |
|---|---|
| **Company Name:** | |
| **Company Address:** | |
| **Contact Name/Title/Phone:** | |
| **Contact Email:** | |
| **Contract Award Date:** | |
| **Contract Completion Date:** | |
| **Contract Project Name:** | |
| **Brief Description of Services:** | |

# ATTACHMENT E: CERTIFICATE OF INSURANCE
## (PROPOSAL RESPONDER SUPPLIES INSURANCE WITH THE PROPOSAL PACKAGE)

**INSURANCE REQUIREMENTS**

If requested, the Respondent shall supply an original, certified copy of an insurance certificate listing **the Entity** as additional insured. The successful Respondent will be required to maintain, at all times during performance of the contract, the insurance detailed below. Failure to provide this insurance certificate within the specified amount of time may result in disqualification of bid.

a. Workers' Compensation Insurance as required by laws and regulations applicable to and covering employees of Contract engaged in the performance of the work under this agreement with a limit of not less than $1,000,000.00.

b. Employers' Liability Insurance protecting Responder against common law liability, in the absence of statutory liability, for employee bodily injury arising out of the master-servant relationship with a limit of not less than $1,000,000.00.

c. Comprehensive General Liability Insurance including products/completed operation with limits of liability of not less than: Bodily Injury $1,000,000.00 per each person, $2,000,000.00 per each occurrence/ aggregate; Property Damage $1,000,000.00 per each occurrence.

d. Excess Liability Insurance Comprehensive General Liability, Comprehensive Automobile Liability and coverages afforded by the policies above, with the minimum limits of $_____ excess of specified limits.

# ATTACHMENT F: ETHICS AND CONFLICT OF INTEREST ACKNOWLEDGEMENT

Public servants are expected to conduct themselves impartially and in a manner that inspires public confidence, while ensuring that responsible contractors have fair and equal access to governmental procurement.

The City of La Marque, Galveston County is committed to protection of government integrity, while also facilitating the recruitment and retention of the skilled personnel necessary to support its operations. To achieve this objective, The City of La Marque, Galveston County has established standards of ethical conduct and conflict of interest policies and expects all vendors, contractors, and subrecipients to adhere to the same core principles as described below.

To achieve these standards, it is essential that those doing business with the City of La Marque, Galveston County also observe the ethical standards prescribed here.

I acknowledge that it is a breach of ethics to attempt to influence any public employee, elected official, or department head to violate the standards of ethical conduct set forth in this code.

I further acknowledge that it is a breach of ethics for any employee of City of La Marque, Galveston County or a vendor doing business with the City of La Marque, Galveston County to participate directly or indirectly in a procurement when the employee or vendor knows that:

A. The employee or any member of the employee's immediate family or household has a substantial financial interest in a company responding to a City of La Marque, Galveston County procurement.

B. A business or organization in which the employee or any member of the employee's immediate family has a financial interest pertaining to the procurement.

I understand that it is a breach of ethics to offer, give, or agree to give any employee of City of La Marque, Galveston County, or for any employee to solicit, demand, accept, or agree to accept from a vendor, a gratuity of consequence or any offer of employment in connection with any decision, approval, disapproval, recommendation, preparation, or any part of a program requirement or purchase request influencing the content of specification or procurement standard, rendering of advice, investigation, auditing, or in any other advisory capacity in any proceeding or controversy, any particular matter pertaining to any program requirement, contract or subcontract, or to any solicitation or proposal therefore pending before City of La Marque, Galveston County.

I acknowledge that it is a breach of ethics for any payment, gratuity, or offer of employment to be made by or on behalf of a subcontractor under a contract to the prime contractor or higher tier subcontractor for any contract for City of La Marque, Galveston County as an inducement for the award of a contract or order.

I certify that I have read and understand the ethical standards set forth by City of La Marque, Galveston County and agree to comply with them in all business dealings with the City of La Marque, Galveston County.

| | |
|---|---|
| _____ | _____ |
| SIGNATURE, VENDOR AUTHORIZED REPRESENTATIVE | COMPANY |
| _____ | _____ |
| PRINTED NAME, TITLE | DATE |

## ATTACHMENT G: STATEMENT OF CONFLICTS OF INTEREST (IF ANY)

The Respondent vendor must describe any conflicts of interest regarding the goods and or services associated with this solicitation.

**The Respondent shall complete and submit Form CIQ (Attachment I) if the service provider or key employees have conflicts regarding these services**.

The conflict of interest statement is required if the service provider or key employees have conflicts regarding the services and a plan for mitigating the conflict(s).

**The Entity** may in its sole discretion determine whether a conflict disqualifies a firm, and/or whether a conflict mitigation plan is acceptable.

**If the Respondent does not identify a conflict, then they should enter no conflict identified on the Submission Checklist (Attachment A).**

## CONFLICT OF INTEREST QUESTIONNAIRE

**FORM CIQ**

**For vendor doing business with local governmental entity**

**This questionnaire reflects changes made to the law by H.B. 23, 84th Leg., Regular Session.**

This questionnaire is being filed in accordance with Chapter 176, Local Government Code, by a vendor who has a business relationship as defined by Section 176.001(1-a) with a local governmental entity and the vendor meets requirements under Section 176.006(a).

By law this questionnaire must be filed with the records administrator of the local governmental entity not later than the 7th business day after the date the vendor becomes aware of facts that require the statement to be filed. *See* Section 176.006(a-1), Local Government Code.

A vendor commits an offense if the vendor knowingly violates Section 176.006, Local Government Code. An offense under this section is a misdemeanor.

**OFFICE USE ONLY**

Date Received

1 **Name of vendor who has a business relationship with local governmental entity.**

2 ☐ **Check this box if you are filing an update to a previously filed questionnaire.** (The law requires that you file an updated completed questionnaire with the appropriate filing authority not later than the 7th business day after the date on which you became aware that the originally filed questionnaire was incomplete or inaccurate.)

3 **Name of local government officer about whom the information is being disclosed.**

_____
Name of Officer

4 **Describe each employment or other business relationship with the local government officer, or a family member of the officer, as described by Section 176.003(a)(2)(A). Also describe any family relationship with the local government officer. Complete subparts A and B for each employment or business relationship described. Attach additional pages to this Form CIQ as necessary.**

A. Is the local government officer or a family member of the officer receiving or likely to receive taxable income, other than investment income, from the vendor?

☐ Yes ☐ No

B. Is the vendor receiving or likely to receive taxable income, other than investment income, from or at the direction of the local government officer or a family member of the officer AND the taxable income is not received from the local governmental entity?

☐ Yes ☐ No

5 **Describe each employment or business relationship that the vendor named in Section 1 maintains with a corporation or other business entity with respect to which the local government officer serves as an officer or director, or holds an ownership interest of one percent or more.**

6 ☐ Check this box if the vendor has given the local government officer or a family member of the officer one or more gifts as described in Section 176.003(a)(2)(B), excluding gifts described in Section 176.003(a-1).

7

_____ _____
Signature of vendor doing business with the governmental entity Date

Form provided by Texas Ethics Commission www.ethics.state.tx.us Revised 1/1/2021

## CONFLICT OF INTEREST QUESTIONNAIRE
## For vendor doing business with local governmental entity

A complete copy of Chapter 176 of the Local Government Code may be found at http://www.statutes.legis.state.tx.us/Docs/LG/htm/LG.176.htm. For easy reference, below are some of the sections cited on this form.

**Local Government Code § 176.001(1-a):** "Business relationship" means a connection between two or more parties based on commercial activity of one of the parties. The term does not include a connection based on:

(A) a transaction that is subject to rate or fee regulation by a federal, state, or local governmental entity or an agency of a federal, state, or local governmental entity;

(B) a transaction conducted at a price and subject to terms available to the public; or

(C) a purchase or lease of goods or services from a person that is chartered by a state or federal agency and that is subject to regular examination by, and reporting to, that agency.

**Local Government Code § 176.003(a)(2)(A) and (B):**

(a) A local government officer shall file a conflicts disclosure statement with respect to a vendor if:

***

(2) the vendor:

(A) has an employment or other business relationship with the local government officer or a family member of the officer that results in the officer or family member receiving taxable income, other than investment income, that exceeds $2,500 during the 12-month period preceding the date that the officer becomes aware that

(i) a contract between the local governmental entity and vendor has been executed; or

(ii) the local governmental entity is considering entering into a contract with the vendor;

(B) has given to the local government officer or a family member of the officer one or more gifts that have an aggregate value of more than $100 in the 12-month period preceding the date the officer becomes aware that:

(i) a contract between the local governmental entity and vendor has been executed; or

(ii) the local governmental entity is considering entering into a contract with the vendor.

**Local Government Code § 176.006(a) and (a-1)**

(a) A vendor shall file a completed conflict of interest questionnaire if the vendor has a business relationship with a local governmental entity and:

(1) has an employment or other business relationship with a local government officer of that local governmental entity, or a family member of the officer, described by Section 176.003(a)(2)(A);

(2) has given a local government officer of that local governmental entity, or a family member of the officer, one or more gifts with the aggregate value specified by Section 176.003(a)(2)(B), excluding any gift described by Section 176.003(a-1); or

(3) has a family relationship with a local government officer of that local governmental entity.

(a-1) The completed conflict of interest questionnaire must be filed with the appropriate records administrator not later than the seventh business day after the later of:

(1) the date that the vendor:

(A) begins discussions or negotiations to enter into a contract with the local governmental entity; or

(B) submits to the local governmental entity an application, response to a request for proposals or bids, correspondence, or another writing related to a potential contract with the local governmental entity; or

(2) the date the vendor becomes aware:

(A) of an employment or other business relationship with a local government officer, or a family member of the officer, described by Subsection (a);

(B) that the vendor has given one or more gifts described by Subsection (a); or

(C) of a family relationship with a local government officer.

## ATTACHMENT I: DISCLOSURE OF LOBBYING ACTIVITIES
## SF-LLL CERTIFICATION REGARDING LOBBYING
***(TO BE SUBMITTED WITH EACH BID OR OFFER EXCEEDING $100,000)***

The undersigned certifies, to the best of his or her knowledge and belief, that:

(a) No Federal appropriated funds have been paid or will be paid, by or on behalf of the undersigned, to any person for influencing or attempting to influence an officer or employee of an agency, a Member of Congress, an officer or employee of Congress, or an employee of a Member of Congress in connection with the awarding of any Federal contract, the making of any Federal grant, the making of any Federal loan, the entering into of any cooperative agreement, and the extension, continuation, renewal, amendment, or modification of any Federal contract, grant, loan, or cooperative agreement.

(b) If any funds other than Federal appropriated funds have been paid or will be paid to any person for influencing or attempting to influence an officer or employee of any agency, a Member of Congress, an officer or employee of Congress, or an employee of a Member of Congress in connection with this Federal contract, grant, loan, or cooperative agreement, the undersigned shall complete and submit Standard Form-LLL, "Disclosure of Lobbying Activities," in accordance with its instructions.

(c) The undersigned shall require that the language in paragraphs (a) and (b) of this anti-lobbying certification be included in the award documents for all subawards at all tiers (including subcontracts, subgrants, and contracts under grants, loans, and cooperative agreements) and that all subrecipients shall certify and disclose accordingly.

This certification is a material representation of fact upon which reliance was placed when this transaction was made or entered into. Submission of this certification is a prerequisite for making or entering into this transaction imposed by 31, U.S.C. § 1352 (as amended by the Lobbying Disclosure Act of 1995).

The Contractor, _____ (insert business name), certifies or affirms the truthfulness and accuracy of each statement of its certification and disclosure, if any. In addition, the Contractor understands and agrees that the provisions of 31 U.S.C. § 3801 et seq., apply to this certification and disclosure, if any.

| | |
|---|---|
| **SIGNATURE** | |
| **NAME OF AUTHORIZED AGENT** | |
| **TITLE OF AUTHORIZED AGENT** | |
| **DATE** | |

# DISCLOSURE OF LOBBYING ACTIVITIES – INSTRUCTIONS

Instructions, searching existing data sources, gathering, and maintaining the data needed, and completing and reviewing the collection of information. Send comments regarding the burden estimate or any other aspect of this collection of information, including suggestions for reducing this burden, to the Office of Management and Budget, Paperwork Reduction Project (0348-0046), Washington, DC 20503. Approved by OMB 0348-0046. Complete this form to disclose lobbying activities pursuant to 31 U.S.C. 1352

| **1.Type of Federal Action:**<br><br>☐ a. contract<br>☐ b. grant<br>☐ c. cooperative agreement<br>☐ d. loan<br>☐ e. loan guarantee<br>☐ f. loan insurance | **2. Status of Federal Action:**<br><br>☐ a. bid/offer/application<br>☐ b. initial award<br>☐ c. post-award | **3. Report Type:**<br><br>☐ a. initial filing<br>☐ b. material change |
|---|---|---|
| **4. Name and Address of Reporting Entity:**<br>☐ Prime ☐ Subawardee Tier _____, *if known:*<br><br>Name:<br>Street Address:<br>City, State, Zip:<br>**Congressional District, if known:** | | **5. If Reporting Entity in No. 4 is Subawardee, Enter Name and Address of Prime:**<br><br>Name:<br>Street Address:<br>City, State, Zip:<br>**Congressional District, if known:** |
| **6. Federal Department/Agency:** | | **7. Federal Program Name/Description:**<br><br>CFDA Number, *if applicable*: _____ |
| **8. Federal Action Number, *if known:*** | | **9. Award Amount, *if known*:**<br><br>**$** |
| **10a. Name and Address of Lobbying Registrant**<br><br>Name (First, MI, Last):<br>Street Address:<br>City, State, Zip: | | **10b. Individuals Performing Services**<br>*(including address if different from No. 10a)*<br>Name (First, MI, Last):<br>Street Address:<br>City, State, Zip: |

**11.** Information requested through this form is authorized by Title 31 U.S.C., Section 1352. This disclosure of lobbying activities is a material representation of fact upon which reliance was placed by the tier above when this transaction was made or entered into. This disclosure is required pursuant to 31 U.S.C. 1352. This information will be reported to the Congress semi-annually and will be available for public inspection. Any person who fails to file the required disclosure shall be subject to a civil penalty of not less than $10,000 and not more than $100,000 for each such failure.

**Signature: _____**

**Name: _____** **Title: _____**

**Telephone: _____** **Date: _____**

| **Federal Use Only** | **Authorized for Local Reproduction**<br>**Standard Form – LLL (Rev. 7-97)** |
|---|---|

# ATTACHMENT J:TEXAS ETHICS COMMISSION CERTIFICATE OF INTERESTED PARTIES (FORM 1295)

*(TO BE COMPLETED BY THE AWARDED VENDOR PRIOR TO CONTRACT EXECUTION)*

## CERTIFICATE OF INTERESTED PARTIES — FORM 1295

OFFICE USE ONLY

Complete Nos. 1 - 4 and 6 if there are interested parties.
Complete Nos. 1, 2, 3, 5, and 6 if there are no interested parties.

1 Name of business entity filing form, and the city, state and country of the business entity's place of business.

2 Name of governmental entity or state agency that is a party to the contract for which the form is being filed.

3 Provide the identification number used by the governmental entity or state agency to track or identify the contract, and provide a description of the services, goods, or other property to be provided under the contract.

| 4 Name of Interested Party | City, State, Country (place of business) | Nature of Interest (check applicable) | |
|---|---|---|---|
| | | Controlling | Intermediary |
| | | | |
| | | | |
| | | | |
| | | | |
| | | | |
| | | | |
| | | | |

5 Check only if there is NO Interested Party. ☐

6 UNSWORN DECLARATION

My name is _____, and my date of birth is _____.

My address is _____, _____, _____, _____, _____.
(street) (city) (state) (zip code) (country)

I declare under penalty of perjury that the foregoing is true and correct.

Executed in _____ County, State of _____, on the _____ day of _____, 20_____.
(month) (year)

_____
Signature of authorized agent of contracting business entity
(Declarant)

ADD ADDITIONAL PAGES AS NECESSARY

Form provided by Texas Ethics Commission www.ethics.state.tx.us Revised 12/22/2017

Must file online at www.ethics.state.tx.us/File

## ATTACHMENT K: BIDDER'S CERTIFICATION

In accordance with Texas Government Code Sections 2252.001 through 2252.004 (relating to bids by nonresident contractors), the pertinent portion of the Act has been extracted and is as follows:

1. "Nonresident bidder" refers to a person who is not a resident.
2. "Resident bidder" refers to a person whose principal place of business is in this state, including a contractor whose ultimate parent company or majority owner has its principal place of business in this state.

A governmental entity may not award a governmental contract to a nonresident bidder unless the nonresident underbids the lowest bid submitted by a responsible resident bidder by an amount that is not less than the greater of the following:

1. the amount by which a resident bidder would be required to underbid the nonresident bidder to obtain a comparable contract in the state in which the nonresident's principal place of business is located; or
2. the amount by which a resident bidder would be required to underbid the nonresident bidder to obtain a comparable contract in the state in which a majority of the manufacturing relating to the contract will be performed.

I certify that _____ (Company Name) is a

☐ **Resident bidder of Texas** as defined in Section 2252.001(4), Texas Government Code,

**OR**

☐ **Nonresident bidder** as defined in Section 2252.001(3), Texas Government Code, and our principal place of business is located at _____ (City and State).

**Note: If the Respondent is an out-of-state company, a Certificate of Authority from the Secretary of State to do business in Texas must be provided.**

| | |
|---|---|
| **SIGNATURE** | |
| **NAME OF AUTHORIZED AGENT** | |
| **TITLE OF AUTHORIZED AGENT** | |
| **DATE** | |

## NON-COLLUSION AFFIDAVIT

STATE OF TEXAS §
§
COUNTY OF _____ §

By the signature below, the signatory for the bidder certifies that neither he/she nor the firm, corporation, partnership or institution represented by the signatory or anyone acting for the firm bidding this project has violated the antitrust laws of this State, codified at Section 15.01, *et seq.*, Texas Business and Commerce Code, or the Federal antitrust laws, nor communicated directly or indirectly the bid made to any competitor or any other person engaged in the same line of business, nor has the signatory or anyone acting for the firm, corporation or institution submitting a bid committed any other act of collusion related to the development and submission of this bid proposal.

Signature: _____

Printed Name: _____

Title: _____

Company: _____

Date: _____

SUBSCRIBED and sworn to before me the undersigned authority by _____ on the _____ day of _____, 20_____ on behalf of said bidder.

_____
Notary Public in and for the
State of Texas

My commission expires: _____

# APPENDIX I – SAMPLE CONTRACT

## SAMPLE CONTRACT – INVITATION FOR BID NON-CONSTRUCTION ONLY

**CITY OF LA MARQUE**
**AMERICAN RESCUE PLAN ACT (ARPA) PROGRAM**
**GENERAL SERVICES, SUPPLIES, AND/OR EQUIPMENT CONTRACT**

| | |
|---|---|
| **Vendor Name** | Vendor Name |
| **Vendor Unique Entity Identifier (UEI) if available** | XXXXXXXXXXXX |
| **Period of Performance Start Date** | |
| **Period of Performance End Date** | |
| **Amount of Federal Funds Obligated by this Agreement** | $000,000 |
| **Assisted Listing Number (ALN) #** 21.027 | **FAIN #** |

**INTRODUCTION**

THIS CONTRACT for General Services, Supplies, and/or Equipment ("Contract") is made and entered into this [Date], by and between [City of La Marque], Texas, hereinafter referred to as the "Entity" and [Vendor Name], hereinafter referred to as the "Vendor." Entity and Vendor are sometimes each referred to as a "Party" and collectively "Parties."

The following recitals are incorporated in and made a part of this Contract.

WHEREAS, on March 11, 2021, President Biden signed the U.S. Senate-amended H.R. 1319 (P.L. 117-2) known as the American Rescue Plan Act (hereinafter "ARPA"); and

WHEREAS, under ARPA Section 603 (c)(1)(A) and (3) and the Final Rule 31 CFR 35.6, recipients may use Coronavirus State and Local Fiscal Recovery Funds ("SLFRF") to allocate funds for the provision of government services and/or make necessary investments in water, sewer, and broadband infrastructure; and

WHEREAS, the Entity has determined that it has the objective of providing services to its residents; and

WHEREAS, the Entity has been awarded ARPA funds by the U.S. Department of the Treasury ("Treasury") which have been distributed to the Entity from ARPA for covered costs and eligible expenses to be incurred during the period which began on March 3, 2021 (the date ARPA became law) until December 31, 2024 (to be fully expended by December 31, 2026); and

WHEREAS, the Entity desires to disburse funds to the Vendor to perform certain services or provide certain supplies or equipment in connection therewith as set forth in this Contract and in the Scope of Services attached hereto; and

WHEREAS, Vendor has represented to the Entity that it is duly qualified, eligible, and willing to provide the services identified herein and in the Scope of Services attached hereto.

NOW, THEREFORE, in consideration of the foregoing recitals and the terms and conditions set forth herein, the Parties hereto do mutually agree as follows:

## SECTION 1. CONTRACT ADMINISTRATION

### SECTION 1.1 CONTACT INFORMATION & NOTICES

For the purposes of this Contract, the Entity's Representative listed below will serve as the primary point of contact for the Vendor. All required reports and communication shall be directed to this liaison and other local personnel as appropriate. The Vendor shall designate a Representative to act on Vendor's behalf for all purposes, including execution of Change Orders and Requests for Payment.

Any notice or communication required or permitted to be given under this Contract must be in writing. The initial contact information of the parties, which one party may change by giving written notice to the other party, are as follows:

| | | | |
|---|---|---|---|
| **Entity Name** | City of La Marque | **Vendor Name** | |
| **Entity Address 1** | 1111 Bayou Road | **Vendor Address 1** | |
| **Entity Address 2** | La Marque, Texas 77568 | **Vendor Address 2** | |
| | | | |
| **Entity Representative for Project** | | **Vendor Representative for Project** | |
| **Name** | Amanda Hobby | **Name** | |
| **Title** | Assistant Director of Public Works | **Title** | |
| **Phone** | (409) 795-7996 | **Phone** | |
| **Email** | a.hobby@cityoflamarque.org | **Email** | |
| **Entity Billing Contact** | | **Vendor Billing Contact** | |
| **Name** | Gina Galicia | **Name** | |
| **Title** | Accounts Payable Clerk | **Title** | |
| **Phone** | (409) 938-9214 | **Phone** | |
| **Email** | g.galicia@cityoflamarque.org | **Email** | |

## SECTION 1.2 PARTS INCORPORATED

Parts Incorporated. In addition to the Exhibits identified below which are incorporated into this Contract, it is understood and agreed that additional terms of this Contract are to be performed in accordance with the proposal documents (scope of work, images, and specifications), submitted proposal response and related exhibits, affidavits, addendums, statutory requirements, and the ARPA Terms & Conditions.

Exhibits

| | |
|---|---|
| Exhibit A1 | Scope of Work |
| Exhibit A2 | Payment & Pricing Schedule |
| Exhibit A3 | Request for Payment |
| Exhibit B | ARPA Required Contract Provisions |
| Exhibit C | Other Relevant Information/Special Conditions for Construction |
| Exhibit D | Insurance Certificate |
| Exhibit E | Bid, Performance, and Payment Bonds |
| Exhibit F | Eligibility Verification (SAM.gov) |
| Exhibit G | Certificate of Interested Parties (Form 1295) |

## SECTION 1.4 CONTRACT DOCUMENTS

By reference, the Contract Documents consist of:

a. This Contract and all exhibits listed, contained, or referenced in this Contract.

b. All Addenda issued before the Effective Date of this Contract;

c. All Alternates accepted by the Entity before the Effective Date of this Contract;

d. All Change Orders issued after the Effective Date of this Contract; and

e. The response submitted by Vendor in response to the IFB issued by Entity for this Project.

The Contract and Exhibit Documents form the entire and integrated Contract between Entity and Vendor, and supersede all prior negotiations, representations, or agreements, written or oral. To the extent of any conflict between Vendor's Proposal and any other Contract Document, the Contract Documents shall govern.

If there is an irreconcilable difference between or among the various documents that make up the Contract Documents, the interpretation that provides for a higher quality of material and/or workmanship will prevail over all other interpretations.

### 1.4.1 Term of Contract and Delivery Schedule – Commencement of Work

Entity shall issue a Notice to Proceed (NTP) identifying the date for commencement of the Work. Vendor shall achieve substantial completion of the Work within 90 calendar days after the commencement date; as such completion date may be extended by approved Change Orders. THE TIME SET FOR COMPLETION OF THE WORK IS AN ESSENTIAL ELEMENT OF THE CONTRACT. In any event, all of the services required and performed hereunder shall be completed no later than December 31, 2024.

### 1.4.2 Pre-Existing Conditions

Vendor acknowledges that it has been provided access to the existing improvements and conditions on the Project site and that it has thoroughly investigated those conditions. Vendor's investigation was instrumental in preparing its bid to perform the Work. Vendor shall not make or be entitled to any adjustment to the Contract Time or the Contract Sum arising from Project conditions that the Vendor discovered or, in the exercise of reasonable care, should have discovered

in Vendor's investigation.

### 1.4.3 Liquidated Damages

Vendor and Entity agree that a breach of this Contract as to completion time will cause damage to the Entity, but further agree that such damage cannot be accurately measured. Therefore, the Parties agree that $100.00 shall be subtracted from the Contract amount for each and every calendar day that the Work or any portion of the Work remains uncompleted after the expiration of the time period specified in the Notice to Proceed, or as extended by a change order.

### 1.4.4 Dispute Resolution

Disputes arising under the Contract shall be submitted to a process of resolution pursuant to alternative dispute resolution practices, such as mediation, binding arbitration, or non-binding arbitration pursuant to industry standards, prior to being submitted to a court for adjudication. It is understood that the Entity shall have the right to request mediation if services being provided are deemed deficient in any way.

### 1.4.5 Acquisition, Merger, Sale and/or Transfer of Business, etc.

It is understood by all parties that if, during the life of the Contract, the Vendor disposes of his/her business concern by acquisition, merger, sale, and or/transfer or by any means conveys his/her interest(s) to another party, all obligations are transferred to that new party. In this event, the new vendor will be required to submit all documentation/legal instruments that were required in the original bid/contract. Any change shall be approved by the Entity, who retains the right to reject the transfer of the contract.

### 1.4.6 Termination of Contract For Cause

This Contract may be terminated by the Entity for cause, including any nonperformance by the Vendor; failure of the Vendor to fulfill in a timely and proper manner its obligations under this Contract; or violation of any of the covenants, agreements, or stipulations of the Contract, upon thirty (30) days' written notice to Vendor including a statement of the reasons, therefore. The determination of the Entity as to the cause of termination and the appropriateness thereof shall be final and binding upon both Entity and Vendor. Cause for termination shall include any material failure by Vendor to comply with any terms of this Contract.

a. In such event, all finished or unfinished services, documents, data, maps, studies, surveys, drawings, models, photographs, and reports prepared by the Vendor under this Contract shall, at the option of the Entity, become its property, and the Vendor shall be entitled to receive just and equitable compensation for any work satisfactorily completed hereunder.

b. Notwithstanding the above, the Vendor shall not be relieved of liability to the Entity for damages sustained by the Entity by virtue of any breach of this Contract by the Vendor, and the Entity may withhold any payments to the Vendor for the purposes of set-off until such time as the exact amount of damages due the Entity from the Vendor is determined.

c. The Vendor agrees to indemnify and hold the Entity harmless from any liability to subcontractors or suppliers concerning payment for work performed or goods supplied arising out of the lawful termination of the Contract by the Entity under this provision.

d. In case of default by the Vendor, the Entity may procure the goods or services from other sources and hold the Vendor responsible for any excess cost.

e. Continuation of the terms of the Contract beyond the fiscal year is contingent on availability of funds in the following year's budget. In the event of unavailability of such funds, the Entity reserves the right to cancel the Contract.

f. If this Contract is terminated for cause, excluding funding discontinuance or disapproval, Vendor shall have the right to attempt to cure its failure during the thirty (30) day period prior to termination to the satisfaction of the Entity at the Entity's sole discretion.

### 1.4.7 Termination of Contract For Convenience of the Entity

The Entity may terminate this Contract at any time by giving at least thirty (30) days' notice in writing to the Vendor. If the Vendor is terminated by the Entity as provided herein, the Vendor will be paid for actual services provided or delivered purchases that are determined acceptable at the sole discretion of the Entity, less payments of compensation previously made. Vendor

### 1.4.8 Post Expiration and Termination Procedures

Upon expiration or in the event of a prior termination, all remaining and unspent ARPA funds, shall immediately become the sole and separate property of the Entity and the Vendor shall perform all acts and execute all instruments necessary to transfer and assign such funds to the Entity. All finished or unfinished documents, data, studies, reports, and work products prepared by the Vendor under this Contract or with grant funds shall, at the option of the Entity, become Entity's property.

### 1.4.9 Transitional Period

In the event services are terminated by contract expiration or by voluntary termination by either the Vendor or the Entity, the Vendor shall continue all terms and conditions of said Contract for a period not to exceed thirty (30) days at the Entity's request.

### 1.4.10 Ownership of Material

The Entity shall retain all of its rights and interest in any and all documents and property, both hard copy and digital furnished by the Entity to the Vendor for the purpose of assisting the Vendor in the performance of this Contract. All such items shall be returned immediately to the Entity at the expiration or termination of the Contract or completion of any related services pursuant thereto, whichever comes first. None of the documents and/or property shall, without the written consent of the Entity, be disclosed to others or used by the Vendor or permitted by the Vendor to be used by their parties at any time except in the performance of the resulting Contract. Ownership of all data, materials and documentation originated and prepared for the Entity pursuant to this Contract shall belong exclusively to the Entity. All data, reports, computerized information, programs, and materials related to this Project shall be delivered to and become the property of the Entity upon completion of the Project. The Vendor shall not have the right to use, sell, or disclose the total of the interim or final work products, or make available to third parties, without the prior written consent of the Entity.

## SECTION 1.5 CONTRACT SUM AND PAYMENTS

The Vendor shall be compensated per the schedule below. Payment to the Vendor shall be based on satisfactory completion of identified services and/or deliverables and payment/invoicing terms as stated in the IFB, or as mutually agreed upon and contained in this Contract. Payment is expressly contingent upon the availability of ARPA funding.

### 1.5.1 Contract Sum

Entity shall pay Vendor for performance of its obligations under this Contract, including the Base Proposal and Alternate Proposals (if any), the sum of [Spelled out dollar amount here] ($000,000.00), and make payment in accordance with the provisions of this Section.

### 1.5.2 Payment & Pricing Schedule

A Payment & Pricing Schedule (see **Exhibit A2**) subdividing the Project into its respective parts (f needed), and which includes values for all items comprising the Project will serve as the basis for payments made to Vendor.

### 1.5.3 Vendor's Payment Obligations

Vendor shall promptly pay all bills for labor and material performed and furnished by others in connection with this Contract.

a. Firm shall submit an invoice upon completion of each milestone. Deliverables will be considered complete only upon inspection and written acceptance by the Entity. Each invoice shall include deliverable(s) completed and

the price for each. **The final request for reimbursement must be received by City/County no later than September 30, 2026.**

### 1.5.4 Request for Payment

As instructed, all payment requests must be submitted on the Request for Payment (See **Exhibit A3**) including required attachments. Notwithstanding the certification of Vendor's payment requests, the Entity or its Representative will independently review Vendor's payment requests and make a determination as to the amount properly payable to Vendor.

### 1.5.5 Offsets; Deductions; Withholding

a. Entity is an agency of the State of Texas and materials and services utilized in the provision of services or purchases may be exempt from state and local taxes. Vendor is responsible for taking full advantage of all tax exemptions applicable to the Project. Entity will deduct from the Requests for Payment and from the Request for Final Payment any taxes paid for materials or services that were entitled to tax exemption.

b. Amounts assessed as liquidated damages per the above Section of this Contract and other amounts to which Entity is entitled by way of setoff or recovery, if any, shall be deducted from any amounts due Vendor.

c. Notwithstanding any other contractual provision to the contrary, Entity may withhold any payment from Vendor to the extent reasonably required to protect Entity interests under any of the following circumstances: failure to perform work in accordance with Contract Documents; insufficient documentation in Application for Payment; failure to pay subcontractors, employees, hired laborers or materials suppliers; failure to obtain, renew or maintain insurance coverage as required in this Contract; failure to meet schedule requirements or other scenarios that causes the Entity, in good faith judgment, to determine that the remaining balance will not be sufficient to complete the Work in accordance with this Contract. The right to withhold payment is contingent on giving Vendor a minimum of seven (7) calendar days' written notice of specific defects or defaults and an opportunity to cure same, and on Vendor's failure to cure or to take diligent steps to cure within such seven (7) calendar days.

### 1.5.6 Final Payment

Vendor's request for Final Payment must not be made until all Work is completed, all requirements of the Vendor Documents have been satisfied, and Vendor delivers the services or equipment.

## SECTION 2. ENTITY RESPONSIBILITIES

**SECTION 2.1 GENERAL**

a. Entity will cooperate in a timely manner in providing information regarding its requirements.

b. Entity will review and provide final approval of the general schedule, setting the plan for milestone dates and completion or delivery.

c. If the Entity has actual knowledge of any fault or defect or non-conformance with the Specifications, the Entity shall give prompt written notice of such fault, defect, or non-conformance to Vendor.

d. The Entity may designate one or more inspectors of its own who will be given access to the Work as requested or needed. The provision of such inspectors will not reduce or lessen in any respect Vendor's responsibilities for the Work.

e. The Entity may furnish or obtain all legal, accounting, auditing, and insurance counseling services for itself as may be necessary for the Project.

## SECTION 3. SCOPE OF WORK

### SECTION 3.1 GENERAL

Vendor has overall responsibility for and shall furnish all materials, equipment, tools, and labor necessary and reasonably inferable to complete the Work, or any phase of the Work, in accordance with Entity's requirements and the terms of the Contract Documents, including the Drawings, Specifications, Addenda, details, and other documents prepared by Vendor and listed in the attached Exhibits, if applicable.

Vendor's duties as set forth herein shall at no time be in any way diminished by reason of any approval by the Entity nor shall Vendor be released from any liability by reason of such approval by Entity, it being understood that Entity at all times is ultimately relying upon Vendor's skill and knowledge in performing the services required hereunder.

### SECTION 3.2 PROJECT CONTROL

Vendor shall supervise and direct the Work and shall be solely responsible for means, methods, techniques, sequences, and procedures for the Work. Vendor shall promptly correct any defective or non-conforming Work at Vendor's sole expense and without cost to Entity.

### SECTION 3.3 SUBVENDORS

Vendor shall award and enter into all Subcontracts necessary and appropriate to provide all labor and materials for the scope of work.

a. Vendor shall monitor the Work of the Subcontractors as required and coordinate such Work with a goal to attain Substantial Completion not later than the date for Substantial Completion and at a cost not to exceed the Contract Sum.

b. Upon request, Vendor shall provide Entity with complete, unaltered copies of all Subcontracts, and all amendments thereto.

### SECTION 3.4 HUB SUBCONTRACTING PLAN

Vendor shall comply with the requirements of the HUB Subcontracting Plan and shall not make any changes to the HUB Subcontracting Plan without Entity's written approval.

### SECTION 3.5 KEY TASKS

a. Provide services and purchase of equipment in accordance with delivery schedules and other prescribed timelines herein.

b. Provide a warranty on all purchased equipment.

c. Provide excellent customer service. Firm shall be responsive to requests and communicate on a regular basis with the Entity.

d. Provide and maintain all original and copies of supporting documentation.

e. Furnish progress reporting as determined or requested by the Entity.

f. Support and assist the Entity during state/federal monitoring or auditing activities, including providing financial information, reports, and other requests that may be required.

### SECTION 3.6 SCHEDULING

Vendor is solely responsible for delivery of the services/equipment in accordance with the Contract Documents on or before the date specified in the Schedule.

### SECTION 3.7 NON-CONFORMING WORK

Entity may reject any defective or non-conforming Work on the Project of which Entity becomes aware and Vendor shall promptly correct any such defect at Vendor's own cost without increasing the Contract Sum. Upon discovering that any portion of the Work does not conform with Entity's design concept and/or requirements, including the Design Guidelines and Standard Specifications, due to an error or omission in any Construction Document materials prepared or furnished by or on behalf of Vendor, Vendor shall promptly correct such condition at no additional cost to Entity. If Vendor refuses or fails to correct (or improperly corrects) any such condition within a reasonable time after notice, Entity may cause the condition to be corrected and offset the cost of such correction against any monies owed to Vendor; provided, however, if no monies are owed Vendor at the time the condition is discovered or at the time the condition is corrected by Entity, Vendor shall promptly reimburse the Entity for all expenses incurred to correct the condition. Vendor shall warranty all corrective Work, whether performed by or through Vendor or by a third party retained by Entity in accordance with the immediately preceding sentence due to Vendor's refusal or failure to correct properly any non-conforming Work.

## SECTION 3.8 INDEMNIFICATION

Vendor covenants and agrees to indemnify, hold harmless and defend, at its own sole expense, the Entity and its officers, agents, servants, and employees from and against any and all claims or suits for property loss or damage and/or personal injury, including death, to any and all persons, of whatsoever kind or character, whether real or asserted, arising out of or in connection with the execution, performance, attempted performance, or nonperformance of the services under this Contract and/or the operations, activities, and services of the activities described herein; and Vendor hereby assumes all liability and responsibility of the entity and its officers, agents, servants, and employees for any and all claims or suits for property loss or damage and/or personal injury, including death, to any and all persons, of whatsoever kinds or character, whether real or asserted, arising out of or in connection with the execution, performance, attempted performance, or nonperformance of the services or this Contract and/or the operations, activities, and services described herein. Vendor likewise covenants and agrees to and does hereby indemnify and hold harmless entity from and against any and all injury, damage, or destruction of property of entity, arising out of or in connection with all acts or omissions of Vendor, its officers, members, agents, employees, contractors, subcontractors, invitees, licensees, and project participants. Vendor agrees to and shall release Entity, its agents, employees, officers, and legal representatives from all liability for injury, death, damage, or loss to persons or property sustained in connection with or incidental to performance of the services under this Contract.

Vendor shall require all of its contractors and subcontractors to include in its contracts and subcontracts a release and indemnity in favor of the Entity in substantially the same form as above. The indemnity and liability release provided for above shall not apply to any liability resulting from the sole negligence or fault of the Entity, its officers, agents, employees or separate Vendors, and in the event of joint and concurring negligence or fault of the Entity and Vendor, responsibility and indemnity, if any, shall be apportioned in accordance with the laws of the State of Texas, without waiving any governmental immunity available to the entity under Texas law and without waiving any defenses of the parties under Texas law.

The provisions of this section are solely for the benefit of the parties and are not intended to create or grant any rights, contractual or otherwise, to any other person or entity. This section survives termination or expiration of this Contract.

## SECTION 3.9 INSURANCE & BONDING

If applicable, Vendor shall provide Insurance and Bid, Performance, and Payment Bonds as prescribed by Entity in the Solicitation documentation and included here as **Exhibit D** and **Exhibit E**.

# SECTION 4. REQUIRED PROVISIONS

The Vendor shall comply with the following items:

## SECTION 4.1 TERMS AND CONDITIONS

The Vendor agrees to comply with the requirements of Section 503 of the American Rescue Plan Act (ARPA), regulations adopted by Treasury pursuant to Section 603(f) of the Act, and guidance issued by Treasury regarding the foregoing. Vendor also specifically agrees to comply with the ARPA Terms & Conditions attached to this Contract in **Exhibit B.**

**SECTION 4.2 DEBARMENT AND SUSPENSION**

Vendor has provided proof of registration, active/good standing, and non-debarment status in the System for Award Management. Should this status change, the Vendor must notify the Entity immediately.

**SECTION 4.3 ASSURANCES OF COMPLIANCE WITH TITLE VI**

The Vendor shall comply with Title VI of the Civil Rights Act of 1964, which prohibits recipients of federal financial assistance from excluding from a program or activity, denying benefits of, or otherwise discriminating against a person on the basis of race, color, or national origin (42 U.S.C. § 2000d et seq.), as implemented by the Department of the Treasury's Title VI regulations, 31 CFR Part 22, which are herein incorporated by reference and made a part of this contract. Title VI also includes protection to persons with "Limited English Proficiency" in any program or activity receiving federal financial assistance, 42 U.S.C. § 2000d et seq., as implemented by the Department of the Treasury's Title VI regulations, 31 CFR Part 22, and herein incorporated by reference and made a part of this contract.

**SECTION 4.4 LOBBYING CERTIFICATION & DISCLOSURE**

No Federal appropriated funds have been paid or will be paid, by or on behalf of the undersigned, to any person for influencing or attempting to influence an officer or employee of an agency, a Member of Congress, an officer or employee of Congress, or an employee of a Member of Congress in connection with the awarding of any Federal contract, the making of any Federal grant, the making of any Federal loan, the entering into of any cooperative agreement, and the extension, continuation, renewal, amendment, or modification of any Federal contract, grant, loan, or cooperative agreement.

**SECTION 4.5 ETHICS MATTERS**

Vendor and its employees, agents, representatives, and subcontractors have ready and understand the Entity's Conflict of Interest Policy, State of Texas Standards of Conduct and Conflict of Interest Provisions available at Government Code Chapter 572: Personal Financial Disclosure, Standards of Conduct, and Conflict of Interest (state.tx.us), and applicable state ethics laws and rules available. Neither Vendor nor its employees, agents, representatives, or subcontractors will assist or cause Entity employees to violate the Conflict of Interest policies, provisions described by State of Texas Standards of Conduct and Conflict of Interest Provisions, or applicable state ethics laws or rules.

**SECTION 4.6 MAINTENANCE AND ACCESS TO RECORDS**

The Vendor shall maintain records and financial documents sufficient to evidence in compliance with Section 603(c) of the Act, Treasury's regulations implementing that section, and guidance issued by Treasury regarding the foregoing.

The Treasury Office of Inspector General, the Government Accountability Office and the Texas Office of the State Comptroller, or their authorized representatives, shall have the right of access to records (electronic and otherwise) of the Vendor in order to conduct audits or other investigations and all records shall be made available upon request. Records shall be maintained by the Vendor for a period of five (5) years after all funds have been expended or returned to the Treasury, whichever is later.

## SECTION 5. MISCELLANEOUS PROVISIONS

**SECTION 5.1 GENERAL**

a. In any case one or more of the provisions contained in this Contract shall for any reason be held to be invalid, illegal, or unenforceable in any respect, such invalidity, illegality, or unenforceability shall not affect any other provision thereof and this Contract shall be construed as if such invalid, illegal, or unenforceable provision had never been contained herein.

b. If any action at law or in equity is necessary to enforce or interpret the terms of this Contract, the prevailing party shall be entitled to reasonable attorney's fees, costs, and necessary disbursements in addition to any other relief to which such party may be entitled.

c. This Contract may be amended by mutual agreement of the parties hereto and a writing to be attached to be

incorporated into this Contract.

d. Licenses, Permits, Taxes, Fees, Laws, and Regulations

i. Vendor warrants that it will obtain, maintain in effect, and pay the cost for all licenses, permits, or certifications that may be necessary for Vendor's performance of this Contract.

ii. Vendor will be responsible for the payment of all taxes, excises, fees, payroll deductions, employee benefits (if any), fines, penalties or other payments required by federal, state, or local law or regulation in connection with Vendor's performance of this Contract.

iii. Vendor will comply with and will be responsible for requiring its officers and employees to comply with all applicable federal, state, and local laws and regulations, and the rules and regulations of the Entity.

## SECTION 5.2 CAPACITY TO PERFORM

By execution of this Contract, Vendor is certifying that they have the capacity to perform and complete the Scope of Work as provided.

## SECTION 5.3 LIMITATION OF LIABILITY

Except for the obligation of Entity to pay Vendor certain fees, costs, and expenses to the extent expressly set forth in this Contract, the Entity shall have no liability to Vendor or to anyone claiming through or under Vendor by reason of the execution or performance of this Contract. Notwithstanding any obligation or liability of Entity to Vendor, no present or future partner or affiliate of the Entity or any agent, officer, director, or employee of the Entity or anyone claiming under the Entity, has or shall have any personal liability to Vendor or to anyone claiming through or under Vendor by reason of the execution or performance of this Contract.

## SECTION 5.4 ASSIGNMENT

This Contract is a personal service contract for the services of Vendor, and neither Vendor's interest in this Contract (including, but not limited to Vendor's fees due hereunder), nor Vendor's duties hereunder may be assigned or delegated to a third party except as specifically set forth in this Contract.

## SECTION 5.5 GOVERNING LAW AND VENUE

The Vendor agrees to comply with the requirements of Section 603 of the Act, regulations adopted by Treasury pursuant to Section 603(f) of the Act, and guidance issued by Treasury regarding the foregoing.

Additionally, all applicable local government codes for the State of Texas also apply to this Contract. All equipment, supplies, and work furnished under this Contract shall comply with applicable laws, ordinances, and regulations. Vendor shall obtain and pay for such permits and inspections as are required for the legal performance of this work, unless otherwise specified. Vendor shall comply with all federal and state laws and Entity's Ordinances and Codes applicable to the Vendor's operation under this Contract. These Specifications and the Contract resulting here from shall be fully governed by the laws of the State of Texas and shall be fully performable in La Marque (Entity Name), Texas, where venue for any proceeding arising hereunder will lie.

This Contract will be governed by the laws of the State of Texas without reference to its conflicts of law provisions. Venue for any suits arising from this Contract will be in a court of competent jurisdiction in Galveston County, Texas.

## SECTION 5.6 WAIVERS

No delay or omission by either Party in exercising any right or power accruing upon the non-compliance or failure of performance by the other Party of any provision of this Contract or the Contract Documents will impair any such right or power or be construed to be a waiver thereof. A waiver by either Party of any of the covenants, conditions, or agreements of this Contract or any of the Contract Documents to be performed by the other party will not be construed to be a waiver of any subsequent breach of this Contract or the Contract Documents or of any other covenant, condition or agreement contained in this Contract or the Contract Documents.

## SECTION 5.7 SEVERABILITY

If any provision of this Contract is for any reason be held invalid or unenforceable in any respect, such invalidity or unenforceability shall not affect any other provision of this Contract and this Contract will be construed as if such invalid or unenforceable provision had not been included herein.

**SECTION 5.8 NEW LAWS**

Parties agree that if there is a change in any laws, rules, or regulations affecting the performance related to this Contract and enacted after the Effective Date of this Contract, the Parties will enter into good faith negotiations to renegotiate the affected terms of this Contract.

BY: _____
(Entity Official)

_____
(Printed Name)

_____
(Title)

_____
(Date)

BY: _____
(Vendor's Authorized Representative)

_____
(Printed Name)

_____
(Title)

_____
(Date)

## SECTION 6. EXHIBITS

**THE FOLLOWING DOCUMENTS MUST BE COMPLETED AND ATTACHED TO THE CONTRACT:**

| | |
|---|---|
| Exhibit A1 | Scope of Work |
| Exhibit A2 | Payment & Pricing Schedule |
| Exhibit A3 | Request for Payment |
| Exhibit B | ARPA Required Provisions (ARPA Terms & Conditions) |
| Exhibit C | Other Relevant Information |
| Exhibit D | Insurance Certificate (if applicable) |
| Exhibit E | Bid, Performance, and Payment Bonds (if applicable) |
| Exhibit F | Eligibility Verification (SAM.gov) |
| Exhibit G | Certificate of Interested Parties (Form 1295) |

## Exhibit A1 – Scope of Work

To be populated with solicitation Scope of Work

## Exhibit A2 – Payment & Pricing Schedule

The terms for payment for the contract are as follows:

**Payment Schedule:**

Payment will be made within 30 days of a Request for Payment and only after delivery of all services and/or purchases and acceptance by the Entity.

**Pricing Schedule:**

Prices for all goods and/or services shall be all inclusive.

Entity is an agency of the State of Texas and materials and services utilized in the provision of services or purchases may be exempt from state and local taxes. Vendor is responsible for taking full advantage of all tax exemptions applicable to the Project. Entity will deduct from the Requests for Payment and from the Request for Final Payment any taxes paid for materials or services that were entitled to tax exemption.

**Lump Sum Price:** Vendor shall provide pricing in the table below to complete the scope of services contained in **Exhibit A1**, Scope of Work, in accordance with the specifications contained in this document. Costs include all applicable services (i.e. labor, materials, profit, bonding, insurance, permitting, general conditions, and other costs) to provide a turnkey product.

(Note to Entity: Component pricing should be based on the identified components of the scope of work contained in **Exhibit A1**). An example is provided below:

| SCOPE OF WORK | PRICE |
|---|---|
| | $ |
| | $ |
| | $ |
| | $ |
| **TOTAL LUMP SUM PRICE (TOTAL OF ABOVE LINE ITEMS)** | **$** |

## Exhibit A3 – Request for Payment

| | | | |
|---|---|---|---|
| **Project Name:** | | | |
| **Vendor Name:** | | | |
| **Date of Request:** | | | |
| **Contact Name:** | | | |
| **Contact Phone:** | | **Contact Email:** | |

| Item for Payment | Description | Unit Cost or Percent Complete | # of Units | Total Amount |
|---|---|---|---|---|
| | | | | |
| | | | | |
| | | | | |
| **TOTAL** | | | | |

| X | Attachments |
|---|---|
| | |
| | |

| Submitted By | |
|---|---|
| **Name and Title** | |
| **Signature** | |

**CERTIFICATION:** I certify that this Request for Payment contains costs associated with the provision of services in accordance with the terms of the contract. I also certify that all required documentary evidence has been submitted along with the Request for Payment as instructed, including any documentation associated with requirement to pay prevailing wages.

By signing this Request for Payment, I certify to the best of my knowledge and belief that information provided in this Request is true, complete, and accurate. I am aware that any false, fictitious, or fraudulent information, or the omission of any material fact, may subject me to criminal, civil or administrative penalties for fraud, false statements, false claims or otherwise.

**WARNING**: Section 1001 of Title 18 U.S. code makes it a criminal offense to make willful, false statements or misrepresentation of any material fact involving the use of or obtain federal funds.

# Exhibit B – ARPA Required Provisions

2 CFR 200.327 Contract provisions. The Non-Federal entity's contracts should contain applicable provisions described in Appendix II to Part 200—Contract Provisions for Non-Federal Entity Contracts Under Federal Awards. The Non-Federal entity's contracts must contain the provisions described in Appendix II to Part 200—Contract Provisions for Non-Federal Entity Contracts Under Federal Awards, as applicable.

| THRESHOLD | PROVISION | CITATION | PROVISION APPLIES TO |
|---|---|---|---|
| | 2 CFR 200 Appendix II (A-L) | | |
| >$250,000 (Simplified Acquisition Threshold) | Contracts for more than the simplified acquisition threshold, which is the inflation adjusted amount determined by the Civilian Agency Acquisition Council and the Defense Acquisition Regulations Council (Councils) as authorized by 41 U.S.C. 1908, must address administrative, contractual, or legal remedies in instances where contractors violate or breach contract terms, and provide for such sanctions and penalties as appropriate. | 2 CFR 200<br>APPENDIX II (A) | Contractor RFP/IFB<br>Contractor RFQ<br>Subrecipients |
| >$10,000 | All contracts in excess of $10,000 must address termination for cause and for convenience by the Non-Federal entity including the manner by which it will be affected and the basis for settlement. | 2 CFR 200<br>APPENDIX II (B) | Contractor RFP/IFB<br>Contractor RFQ<br>Subrecipients |
| None | Equal Employment Opportunity. Except as otherwise provided under 41 CFR Part 60, all contracts that meet the definition of "federally assisted construction contract" in 41 CFR Part 60-1.3 must include the equal opportunity clause provided under 41 CFR 60-1.4(b), in accordance with Executive Order 11246, "Equal Employment Opportunity" (30 FR 12319, 12935, 3 CFR Part, 1964-1965 Comp., p. 339), as amended by Executive Order 11375, "Amending Executive Order 11246 Relating to Equal Employment Opportunity," and implementing regulations at 41 CFR part 60, "Office of Federal Contract Compliance Programs, Equal Employment Opportunity, Department of Labor."<br>41 CFR 60-1.4 Equal opportunity clause.<br>(b) Federally assisted construction contracts. (1) Except as otherwise provided, each administering agency shall require the inclusion of the following language as a condition of any grant, contract, loan, insurance, or guarantee involving federally assisted construction which is not exempt from the requirements of the equal opportunity clause:<br>The [recipient] hereby agrees that it will incorporate or cause to be incorporated into any contract for construction work, or modification thereof, as defined in the regulations of the Secretary of Labor at 41 CFR Chapter 60, which is paid for in whole or in part with funds obtained from the Federal Government or borrowed on the credit of the Federal Government pursuant to a grant, contract, loan, insurance, or guarantee, or undertaken pursuant to any Federal program involving such grant, contract, loan, insurance, or guarantee, the following equal opportunity clause:<br>During the performance of this contract, the contractor agrees as follows:<br>(9) The contractor will not discriminate against any employee or applicant for employment because of race, color, religion, sex, sexual orientation, gender identity, or national origin. The contractor will take affirmative action to ensure that applicants are employed, and that employees are treated during employment without regard to their race, color, religion, sex, sexual orientation, gender identity, or national origin. Such action shall include, but not be limited to the following:<br>Employment, upgrading, demotion, or transfer; recruitment or recruitment advertising; layoff or termination; rates of pay or other forms of compensation; and selection for training, including apprenticeship. The contractor agrees to post in conspicuous places, available to employees and applicants for employment, notices to be provided setting forth the provisions of this nondiscrimination clause.<br>(10) The contractor will, in all solicitations or advertisements for employees placed by | 2 CFR 200<br>APPENDIX II (C)<br>and<br>41 CFR §60-1.4(b) | Contractor RFP/IFB<br>Contractor RFQ<br>Subrecipients |

| THRESHOLD | PROVISION | CITATION | PROVISION APPLIES TO |
|---|---|---|---|
| | or on behalf of the contractor, state that all qualified applicants will receive consideration for employment without regard to race, color, religion, sex, sexual orientation, gender identity, or national origin.<br>(11) The contractor will not discharge or in any other manner discriminate against any employee or applicant for employment because such employee or applicant has inquired about, discussed, or disclosed the compensation of the employee or applicant or another employee or applicant. This provision shall not apply to instances in which an employee who has access to the compensation information of other employees or applicants as a part of such employee's essential job functions discloses the compensation of such other employees or applicants to individuals who do not otherwise have access to such information, unless such disclosure is in response to a formal complaint or charge, in furtherance of an investigation, proceeding, hearing, or action, including an investigation conducted by the employer, or is consistent with the contractor's legal duty to furnish information.<br>(12) The contractor will send to each labor union or representative of workers with which he has a collective bargaining agreement or other contract or understanding, a notice to be provided advising the said labor union or workers' representatives of the contractor's commitments under this section and shall post copies of the notice in conspicuous places available to employees and applicants for employment.<br>(13) The contractor will comply with all provisions of Executive Order 11246 of September 24, 1965, and of the rules, regulations, and relevant orders of the Secretary of Labor.<br>(14) The contractor will furnish all information and reports required by Executive Order 11246 of September 24, 1965, and by rules, regulations, and orders of the Secretary of Labor, or pursuant thereto, and will permit access to his books, records, and accounts by the administering agency and the Secretary of Labor for purposes of investigation to ascertain compliance with such rules, regulations, and orders.<br>(15) In the event of the contractor's noncompliance with the nondiscrimination clauses of this contract or with any of the said rules, regulations, or orders, this contract may be canceled, terminated, or suspended in whole or in part and the contractor may be declared ineligible for further Government contracts or federally assisted construction contracts in accordance with procedures authorized in Executive Order 11246 of September 24, 1965, and such other sanctions may be imposed and remedies invoked as provided in Executive Order 11246 of September 24, 1965, or by rule, regulation, or order of the Secretary of Labor, or as otherwise provided by law.<br>(16) The contractor will include the portion of the sentence immediately preceding paragraph (1) and the provisions of paragraphs (1) through (8) in every subcontract or purchase order unless exempted by rules, regulations, or orders of the Secretary of Labor issued pursuant to section 204 of Executive Order 11246 of September 24, 1965, so that such provisions will be binding upon each subcontractor or vendor. The contractor will take such action with respect to any subcontract or purchase order as the administering agency may direct as a means of enforcing such provisions, including sanctions for noncompliance:<br>Provided, however, that in the event a contractor becomes involved in, or is threatened with, litigation with a subcontractor or vendor as a result of such direction by the administering agency, the contractor may request the United States to enter into such litigation to protect the interests of the United States.<br>The [recipient] further agrees that it will be bound by the above equal opportunity clause with respect to its own employment practices when it participates in federally assisted construction work: Provided, that if the [recipient] so participating is a State or local government, the above equal opportunity clause is not applicable to any agency, instrumentality or subdivision of such government which does not participate in work on or under the contract.<br>The [recipient] agrees that it will assist and cooperate actively with the administering agency and the Secretary of Labor in obtaining the compliance of contractors and subcontractors with the equal opportunity clause and the rules, regulations, and | | |

| THRESHOLD | PROVISION | CITATION | PROVISION APPLIES TO |
|---|---|---|---|
| | relevant orders of the Secretary of Labor, that it will furnish the administering agency and the Secretary of Labor such information as they may require for the supervision of such compliance, and that it will otherwise assist the recipient agency in the discharge of the agency's primary responsibility for securing compliance.<br><br>The recipient further agrees that it will refrain from entering into any contract or contract modification subject to Executive Order 11246 of September 24, 1965, with a contractor debarred from, or who has not demonstrated eligibility for, Government contracts and federally assisted construction contracts pursuant to the Executive Order and will carry out such sanctions and penalties for violation of the equal opportunity clause as may be imposed upon contractors and subcontractors by the administering agency or the Secretary of Labor pursuant to Part II, Subpart D of the Executive Order. In addition, the [recipient] agrees that if it fails or refuses to comply with these undertakings, the administering agency may take any or all of the following actions: cancel, terminate, or suspend in whole or in part this grant (contract, loan, insurance, guarantee); refrain from extending any further assistance to the [recipient] under the program with respect to which the failure or refund occurred until satisfactory assurance of future compliance has been received from such [recipient]; and refer the case to the Department of Justice for appropriate legal proceedings. | | |
| >$10,000,000 for ARPA but State Provision Applies at any amount and/or<br><br>>$2,000 for CDBG/Braided Funds Projects<br><br>See TX Prevailing Wage Laws | Davis-Bacon Act, as amended (40 U.S.C. 3141-3148). When required by Federal program legislation, all prime construction contracts in excess of $10,000,00 awarded by Non-Federal entities must include a provision for compliance with the Davis-Bacon Act (40 U.S.C. 3141-3144, and 3146-3148) as supplemented by Department of Labor regulations (29 CFR Part 5, "Labor Standards Provisions Applicable to Contracts Covering Federally Financed and Assisted Construction"). In accordance with the statute, contractors must be required to pay wages to laborers and mechanics at a rate not less than the prevailing wages specified in a wage determination made by the Secretary of Labor. In addition, contractors must be required to pay wages not less than once a week. The Non-Federal entity must place a copy of the current prevailing wage determination issued by the Department of Labor in each solicitation. The decision to award a contract or subcontract must be conditioned upon the acceptance of the wage determination. The Non-Federal entity must report all suspected or reported violations to the Federal awarding agency.<br><br>The contracts must also include a provision for compliance with the Copeland "Anti-Kickback" Act (40 U.S.C. 3145), as supplemented by Department of Labor regulations (29 CFR Part 3, "Contractors and Subcontractors on Public Building or Public Work Financed in Whole or in Part by Loans or Grants from the United States"). The Act provides that each contractor or subrecipient must be prohibited from inducing, by any means, any person employed in the construction, completion, or repair of public work, to give up any part of the compensation to which he or she is otherwise entitled. The Non-Federal entity must report all suspected or reported violations to the Federal awarding agency. | 2 CFR 200 APPENDIX II (D) | Contractor RFP/IFB<br><br>Subrecipients |
| >$100,000 | Contract Work Hours and Safety Standards Act (40 U.S.C. 3701-3708). Where applicable, all contracts awarded by the Non-Federal entity in excess of $100,000 that involve the employment of mechanics or laborers must include a provision for compliance with 40 U.S.C. 3702 and 3704, as supplemented by Department of Labor regulations (29 CFR Part 5). Under 40 U.S.C. 3702 of the Act, each contractor must be required to compute the wages of every mechanic and laborer on the basis of a standard work week of 40 hours. Work in excess of the standard work week is permissible provided that the worker is compensated at a rate of not less than one and a half times the basic rate of pay for all hours worked in excess of 40 hours in the work week. The requirements of 40 U.S.C. 3704 are applicable to construction work and provide that no laborer or mechanic must be required to work in surroundings or under working conditions which are unsanitary, hazardous, or dangerous. These requirements do not apply to the purchases of supplies or materials or articles ordinarily available on the open market, or contracts for transportation or | 2 CFR 200 APPENDIX II (E) | Contractor RFP/IFB<br><br>Subrecipients |

| THRESHOLD | PROVISION | CITATION | PROVISION APPLIES TO |
|---|---|---|---|
| | transmission of intelligence. | | |
| None | Rights to Inventions Made Under a Contract or Agreement. If the Federal award meets the definition of "funding agreement" under 37 CFR § 401.2 (a) and the recipient or subrecipient wishes to enter into a contract with a small business firm or nonprofit organization regarding the substitution of parties, assignment or performance of experimental, developmental, or research work under that "funding agreement," the recipient or subrecipient must comply with the requirements of 37 CFR Part 401, "Rights to Inventions Made by Nonprofit Organizations and Small Business Firms Under Government Grants, Contracts and Cooperative Agreements," and any implementing regulations issued by the awarding agency. | 2 CFR 200 APPENDIX II (F) | Contractor RFP/IFB<br>Contractor RFQ<br>Subrecipients |
| >$150,000 | Clean Air Act (42 U.S.C. 7401-7671q.) and the Federal Water Pollution Control Act (33 U.S.C. 1251-1387), as amended – Contracts and subgrants of amounts in excess of $150,000 must contain a provision that requires the Non-Federal award to agree to comply with all applicable standards, orders or regulations issued pursuant to the Clean Air Act (42 U.S.C. 7401-7671q) and the Federal Water Pollution Control Act as amended (33 U.S.C. 1251-1387). Violations must be reported to the Federal awarding agency and the Regional Office of the Environmental Protection Agency (EPA). | 2 CFR 200 APPENDIX II (G) | Contractor RFP/IFB<br>Contractor RFQ<br>Subrecipients |
| >$25,000 | Debarment and Suspension (Executive Orders 12549 and 12689) – A contract award (see 2 CFR 180.220) must not be made to parties listed on the governmentwide exclusions in the System for Award Management (SAM), in accordance with the OMB guidelines at 2 CFR 180 that implement Executive Orders 12549 (3 CFR part 1986 Comp., p. 189) and 12689 (3 CFR part 1989 Comp., p. 235), "Debarment and Suspension." SAM Exclusions contains the names of parties debarred, suspended, or otherwise excluded by agencies, as well as parties declared ineligible under statutory or regulatory authority other than Executive Order 12549. | 2 CFR 200 APPENDIX II (H) | Contractor RFP/IFB<br>Contractor RFQ<br>Subrecipients<br>Vendors |
| >$100,000 | Byrd Anti-Lobbying Amendment (31 U.S.C. 1352) – Contractors that apply or bid for an award exceeding $100,000 must file the required certification. Each tier certifies to the tier above that it will not and has not used Federal appropriated funds to pay any person or organization for influencing or attempting to influence an officer or employee of any agency, a member of Congress, officer or employee of Congress, or an employee of a member of Congress in connection with obtaining any Federal contract, grant or any other award covered by 31 U.S.C. 1352. Each tier must also disclose any lobbying with Non-Federal funds that takes place in connection with obtaining any Federal award. Such disclosures are forwarded from tier to tier up to the Non-Federal award. | 2 CFR 200 APPENDIX II (I) and 24 CFR §570.303 | Contractor RFP/IFB<br>Contractor RFQ<br>Subrecipients |

| THRESHOLD | PROVISION | CITATION | PROVISION APPLIES TO |
|---|---|---|---|
| | See 2 CFR §200.323 - Procurement of Recovered Materials.<br><br>Where applicable, in the performance of contract, pursuant to 2 CFR 200.323, the contractor must comply with section 6002 of the Solid Waste Disposal Act, as amended by the Resource Conservation and Recovery Act. The requirements of Section 6002 include procuring only items designated in guidelines of the Environmental Protection Agency (EPA) at 40 CFR part 247 that contain the highest percentage of recovered materials practicable, consistent with maintaining a satisfactory level of competition, where the purchase price of the item exceeds $10,000 or the value of the quantity acquired during the preceding fiscal year exceeded $10,000; procuring solid waste management services in a manner that maximizes energy and resource recovery; and establishing an affirmative procurement program for procurement of recovered materials identified in the EPA guidelines.<br><br>To the extent that the scope of work or specifications in the contract requires the contractor to provide recovered materials the scope of work or specifications are modified to require that as follows.<br><br>ii. In the performance of this contract, the Contractor shall make maximum use of products containing recovered materials that are EPA-designated items unless the product cannot be acquired—<br>1. Competitively within a timeframe providing for compliance with the contract performance schedule;<br>2. Meeting contract performance requirements; or<br>3. At a reasonable price.<br>iv. Information about this requirement, along with the list of EPA-designated items, is available at EPA's Comprehensive Procurement Guidelines web site, https://www.epa.gov/smm/comprehensive-procurement-guideline-cpg-program.<br>v. The Contractor also agrees to comply with all other applicable requirements of Section 6002 of the "Solid Waste Disposal Act." | 2 CFR 200<br>APPENDIX II (J) | Contractor RFP/IFB<br>Contractor RFQ<br>Subrecipients |
| | See 2 CFR §200.216 - Prohibition on certain telecommunications and video surveillance services or equipment<br><br>(a) Recipients and subrecipients are prohibited from obligating or expending loan or grant funds to:<br>(1) Procure or obtain;<br>(2) Extend or renew a contract to procure or obtain; or<br>(3) Enter into a contract (or extend or renew a contract) to procure or obtain equipment, services, or systems that uses covered telecommunications equipment or services as a substantial or essential component of any system, or as critical technology as part of any system. As described in Public Law 115-232, section 889, covered telecommunications equipment is telecommunications equipment produced by Huawei Technologies Company or ZTE Corporation (or any subsidiary or affiliate of such entities).<br>(i) For the purpose of public safety, security of government facilities, physical security surveillance of critical infrastructure, and other national security purposes, video surveillance and telecommunications equipment produced by Hytera Communications Corporation, Hangzhou Hikvision Digital Technology Company, or Dahua Technology Company (or any subsidiary or affiliate of such entities).<br>(ii) Telecommunications or video surveillance services provided by such entities or using such equipment.<br>(iii) Telecommunications or video surveillance equipment or services produced or provided by an entity that the Secretary of Defense, in consultation with the Director of the National Intelligence or the Director of the Federal Bureau of Investigation, reasonably believes to be an entity owned or | 2 CFR 200<br>APPENDIX II (K) | Contractor RFP/IFB<br>Contractor RFQ<br>Subrecipients |

| THRESHOLD | PROVISION | CITATION | PROVISION APPLIES TO |
|---|---|---|---|
| | controlled by, or otherwise connected to, the government of a covered foreign country.<br>(b) In implementing the prohibition under Public Law 115-232, section 889, subsection (f), paragraph (1), heads of executive agencies administering loan, grant, or subsidy programs shall prioritize available funding and technical support to assist affected businesses, institutions and organizations as is reasonably necessary for those affected entities to transition from covered communications equipment and services, to procure replacement equipment and services, and to ensure that communications service to users and customers is sustained.<br>(c) See Public Law 115-232, section 889 for additional information.<br>(d) See also § 200.471. | | |
| | See 2 CFR §200.322 - Domestic Preferences for Procurements.<br><br>(a) As appropriate and to the extent consistent with law, the Non-Federal entity should, to the greatest extent practicable under a Federal award, provide a preference for the purchase, acquisition, or use of goods, products, or materials produced in the United States (including but not limited to iron, aluminum, steel, cement, and other manufactured products). The requirements of this section must be included in all subawards including all contracts and purchase orders for work or products under this award.<br><br>(b) For purposes of this section:<br>(1) "Produced in the United States" means, for iron and steel products, that all manufacturing processes, from the initial melting stage through the application of coatings, occurred in the United States.<br>(2) "Manufactured products" means items and construction materials composed in whole or in part of non-ferrous metals such as aluminum; plastics and polymer-based products such as polyvinyl chloride pipe; aggregates such as concrete; glass, including optical fiber; and lumber. | 2 CFR 200 APPENDIX II (L) | Contractor RFP/IFB<br>Contractor RFQ<br>Subrecipients |
| | **Additional 2 CFR 200 references & Other Regulations** | | |
| None | The Federal awarding agency must establish conflict of interest policies for Federal awards. The Non-Federal entity must disclose in writing any potential conflict of interest to the Federal awarding agency or pass-through entity in accordance with applicable Federal awarding agency policy. | 2 CFR 200.112 | Contractor RFP/IFB<br>Contractor RFQ<br>Subrecipients |
| None | Contracting with HUB, small and minority businesses, women's business enterprises, and labor surplus area firms.<br>(a) The Non-Federal entity must take all necessary affirmative steps to assure that minority businesses, women's business enterprises, and labor surplus area firms are used when possible.<br>(b) Affirmative steps must include:<br>(1) Placing qualified small and minority businesses and women's business enterprises on solicitation lists;<br>(2) Assuring that small and minority businesses, and women's business enterprises are solicited whenever they are potential sources;<br>(3) Dividing total requirements, when economically feasible, into smaller tasks or quantities to permit maximum participation by small and minority businesses, and women's business enterprises;<br>(4) Establishing delivery schedules, where the requirement permits, which | 2 CFR 200.321 | Contractor RFP/IFB<br>Contractor RFQ<br>Subrecipients |

| THRESHOLD | PROVISION | CITATION | PROVISION APPLIES TO |
|---|---|---|---|
| | encourage participation by small and minority businesses, and women's business enterprises;<br>(5) Using the services and assistance, as appropriate, of such organizations as the Small Business Administration and the Minority Business Development Agency of the Department of Commerce; and<br>(6) Requiring the prime contractor, if subcontracts are to be let, to take the affirmative steps listed in paragraphs (b)(1) through (5) of this section. | | |
| >$10,000 | An NFE (Non-Federal Entity) that is a state agency or an agency of a political subdivision of a state, and the NFE's contractors must comply with Section 6002 of the Solid Waste Disposal Act.<br>Applicable NFEs must include a contract provision requiring compliance with this requirement.<br>This includes contracts awarded by a state agency or political subdivision of a state and its contractors for certain items, as designated by the EPA, with a purchase price greater than $10,000.<br>Indian Tribal Governments and nonprofit organizations are not required to comply with this provision. Additional requirements are listed below. | 2 CFR 200.323 | Contractor RFP/IFB<br>Contractor RFQ<br>Subrecipients |
| None | Financial records, supporting documents, statistical records, and all other Non-Federal entity records pertinent to a Federal award must be retained for a period of three years from the date of submission of the final expenditure report or, for Federal awards that are renewed quarterly or annually, from the date of the submission of the quarterly or annual financial report, respectively, as reported to the Federal awarding agency or pass-through entity in the case of a subrecipient. Federal awarding agencies and pass-through entities must not impose any other record retention requirements upon Non-Federal entities. **All records related to ARPA shall be maintained for 5 years per the ARPA terms, conditions, and regulations.** The only exceptions are the following:<br>(a) If any litigation, claim, or audit is started before the expiration of the 3-year period, the records must be retained until all litigation, claims, or audit findings involving the records have been resolved and final action taken. **All records related to ARPA shall be maintained for 5 years per the ARPA terms, conditions, and regulations.**<br>(b) When the Non-Federal entity is notified in writing by the Federal awarding agency, cognizant agency for audit, oversight agency for audit, cognizant agency for indirect costs, or pass-through entity to extend the retention period.<br>(c) Records for real property and equipment acquired with Federal funds must be retained for 3 years after final disposition. All records related to ARPA shall be maintained for 5 years per the ARPA terms and conditions and regulations.<br>(d) When records are transferred to or maintained by the Federal awarding agency or pass-through entity, the 3-year retention requirement is not applicable to the Non-Federal entity All records related to ARPA shall be maintained for 5 years per the ARPA terms and conditions and regulations. **All records related to ARPA shall be maintained for 5 years per the ARPA terms, conditions, and regulations.**<br>(e) Records for program income transactions after the period of performance. In some cases, recipients must report program income after the period of performance. Where there is such a requirement, the retention period for the records pertaining to the earning of the program income starts from the end of the Non-Federal entity's fiscal year in which the program income is earned.<br>(f) Indirect cost rate proposals and cost allocations plans. This paragraph applies to the following types of documents and their supporting records: Indirect cost rate computations or proposals, cost allocation plans, and any similar accounting computations of the rate at which a particular group of costs is chargeable (such as computer usage chargeback rates or composite fringe benefit rates).<br>(1) *If submitted for negotiation.* If the proposal, plan, or other computation is | 2 CFR 200.334 | Contractor RFP/IFB<br>Contractor RFQ<br>Subrecipients<br>Vendors |

| THRESHOLD | PROVISION | CITATION | PROVISION APPLIES TO |
|---|---|---|---|
| | required to be submitted to the Federal Government (or to the pass-through entity) to form the basis for negotiation of the rate, then the 3-year retention period for its supporting records starts from the date of such submission. **All records related to ARPA shall be maintained for 5 years per the ARPA terms, conditions, and regulations.**<br>(2) *If not submitted for negotiation.* If the proposal, plan, or other computation is not required to be submitted to the Federal Government (or to the pass-through entity) for negotiation purposes, then the 3-year retention period for the proposal, plan, or computation and its supporting records starts from the end of the fiscal year (or other accounting period) covered by the proposal, plan, or other computation. **All records related to ARPA shall be maintained for 5 years per the ARPA terms, conditions, and regulations.** | | |
| None | The Federal awarding agency and the Non-Federal entity should, whenever practicable, collect, transmit, and store Federal award-related information in open and machine-readable formats rather than in closed formats or on paper in accordance with applicable legislative requirements. A machine-readable format is a format in a standard computer language (not English text) that can be read automatically by a web browser or computer system. The Federal awarding agency or pass-through entity must always provide or accept paper versions of Federal award-related information to and from the Non-Federal entity upon request. If paper copies are submitted, the Federal awarding agency or pass-through entity must not require more than an original and two copies. When original records are electronic and cannot be altered, there is no need to create and retain paper copies. When original records are paper, electronic versions may be substituted through the use of duplication or other forms of electronic media provided that they are subject to periodic quality control reviews, provide reasonable safeguards against alteration, and remain readable. | 2 CFR 200.336 | Contractor RFP/IFB<br>Contractor RFQ<br>Subrecipients |
| None | CONTRACTS WITH COMPANIES ENGAGED IN BUSINESS WITH IRAN, SUDAN, OR FOREIGN TERRORIST ORGANIZATION PROHIBITED. A governmental entity may not enter into a governmental contract with a company that is identified on a list prepared and maintained under Section 806.051, 807.051, or 2252.153. The term "foreign terrorist organization" in this paragraph has the meaning assigned to such a term in Section 2252.151(2) of the Texas Government Code. | Texas Government Code 2252.152 | Contractor RFP/IFB<br>Contractor RFQ<br>Subrecipients |
| >$100,000 | PROVISION REQUIRED IN CONTRACT.<br>(a) This section applies only to a contract that:<br>(1) is between a governmental entity and a company with 10 or more full-time employees; and<br>(2) has a value of $100,000 or more that is to be paid wholly or partly from public funds of the governmental entity.<br>(b) A governmental entity may not enter into a contract with a company for goods or services unless the contract contains a written verification from the company that it:<br>(1) does not boycott Israel; and<br>(2) will not boycott Israel during the term of the contract. | Texas Government Code 2271 | Contractor RFP/IFB<br>Contractor RFQ<br>Subrecipients<br>Vendors |
| For Critical Infrastructure Projects | PROHIBITION ON CONTRACTS WITH CERTAIN FOREIGN-OWNED COMPANIES IN CONNECTION WITH CRITICAL INFRASTRUCTURE.<br>PROHIBITED CONTRACTS.<br>(a) A governmental entity may not enter into a contract or other agreement relating to critical infrastructure in this state with a company:<br>(1) if, under the contract or other agreement, the company would be granted direct or remote access to or control of critical infrastructure in this state, excluding access specifically allowed by the governmental entity for product | Texas Government Code, Title 10, Subtitle F, Chapter 2274.0102 | Subrecipients<br>EC 6.1 Awardees |

| THRESHOLD | PROVISION | CITATION | PROVISION APPLIES TO |
|---|---|---|---|
| | warranty and support purposes; and<br>(2) if the governmental entity knows that the company is:<br>(A) owned by or the majority of stock or other ownership interest of the company is held or controlled by:<br>(i) individuals who are citizens of China, Iran, North Korea, Russia, or a designated country; or<br>(ii) a company or other entity, including a governmental entity, that is owned or controlled by citizens of or is directly controlled by the government of China, Iran, North Korea, Russia, or a designated country; or<br>(B) headquartered in China, Iran, North Korea, Russia, or a designated country.<br>(b) The prohibition described by Subsection (a) applies regardless of whether:<br>(1) the company's or its parent company's securities are publicly traded; or<br>(2) the company or its parent company is listed on a public stock exchange as:<br>(A) a Chinese, Iranian, North Korean, or Russian company; or<br>(B) a company of a designated country. | | |
| None | Mandatory standards and policies relating to energy efficiency which are contained in the state energy conservation plan issued in compliance with the Energy Policy and Conservation Act. | 42 U.S.C. 6201 | Contractor RFP/IFB<br>Subrecipients |
| None | The Firm agrees that no otherwise qualified individual with disabilities shall, solely by reason of his/her disability, be denied the benefits of, or be subjected to discrimination, including discrimination in employment, under any program or activity receiving federal financial assistance. | Section 504 of the Rehabilitation Act of 1973, as amended. | Subrecipients |
| | ARPA Terms & Conditions | | |
| ARPA Terms, Conditions, & Records | 1. Use of Funds.<br>a. Recipient understands and agrees that the funds disbursed under this award may only be used in compliance with section 603(c) of the Social Security Act (the Act), Treasury's regulations implementing that section, and guidance issued by Treasury regarding the foregoing.<br>b. Recipient will determine prior to engaging in any project using this assistance that it has the institutional, managerial, and financial capability to ensure proper planning, management, and completion of such project. | Section 9901 of the American Rescue Plan Act, Pub. L. No. 117-2;<br>Section 602(b), 603(b) and/or 603(c) as applicable | Subrecipients |
| ARPA Terms, Conditions, & Records | 2. Period of Performance. The period of performance for this award begins on the date hereof and ends on December 31, 2026. As set forth in Treasury's implementing regulations, Recipients may use award funds to cover eligible costs incurred during the period that begins on March 3, 2021, and ends on December 31, 2024. | Section 9901 of the American Rescue Plan Act, Pub. L. No. 117-2;<br>Section 602(b), 603(b) and/or 603(c) as applicable | Subrecipients |
| ARPA Terms, Conditions, & Records | 3. Reporting. Recipient agrees to comply with any reporting obligations established by Treasury as they relate to this award. | Section 9901 of the American Rescue Plan Act, Pub. L. No. 117-2;<br>Section 602(b), 603(b) and/or 603(c) as applicable | Subrecipients |

| THRESHOLD | PROVISION | CITATION | PROVISION APPLIES TO |
|---|---|---|---|
| ARPA Terms, Conditions, & Records | 4. Maintenance of and Access to Records<br>a. Recipient shall maintain records and financial documents sufficient to evidence compliance with section 603(c) of the Act, Treasury's regulations implementing that section, and guidance issued by Treasury regarding the foregoing.<br>b. The Treasury Office of Inspector General and the Government Accountability Office, or their authorized representatives, shall have the right of access to records (electronic and otherwise) of Recipient in order to conduct audits or other investigations.<br>c. Records shall be maintained by Recipient for a period of five (5) years after all funds have been expended or returned to Treasury, whichever is later. | Section 9901 of the American Rescue Plan Act, Pub. L. No. 117-2;<br>Section 602(b), 603(b) and/or 603(c) as applicable | Contractor RFP/IFB<br>Contractor RFQ<br>Subrecipients<br>Vendors |
| ARPA Terms, Conditions, & Records | 5. Pre-award Costs. Pre-award costs, as defined in 2 CFR § 200.458, may not be paid with funding from this award. | Section 9901 of the American Rescue Plan Act, Pub. L. No. 117-2;<br>Section 602(b), 603(b) and/or 603(c) as applicable | Subrecipients |
| ARPA Terms, Conditions, & Records | 6. Administrative Costs. Recipient may use funds provided under this award to cover both direct and indirect costs. | Section 9901 of the American Rescue Plan Act, Pub. L. No. 117-2;<br>Section 602(b), 603(b) and/or 603(c) as applicable | Subrecipients |
| ARPA Terms, Conditions, & Records | 7. Cost Sharing. Cost sharing or matching funds are not required to be provided by Recipient. | Section 9901 of the American Rescue Plan Act, Pub. L. No. 117-2;<br>Section 602(b), 603(b) and/or 603(c) as applicable | Subrecipients |
| ARPA Terms, Conditions, & Records | 8. Conflicts of Interest. Recipient understands and agrees it must maintain a conflict of interest policy consistent with 2 CFR § 200.318(c) and that such conflict of interest policy is applicable to each activity funded under this award. Recipient and subrecipients must disclose in writing to Treasury or the pass-through entity, as appropriate, any potential conflict of interest affecting the awarded funds in accordance with 2 CFR § 200.112. | Section 9901 of the American Rescue Plan Act, Pub. L. No. 117-2;<br>Section 602(b), 603(b) and/or 603(c) as applicable | Contractor RFP/IFB<br>Contractor RFQ<br>Subrecipients<br>Vendors |
| ARPA Terms, Conditions, & Records | 9. Compliance with Applicable Law and Regulations.<br>a. Recipient agrees to comply with the requirements of section 603 of the Act, regulations adopted by Treasury pursuant to section 603(f) of the Act, and guidance issued by Treasury regarding the foregoing. Recipient also agrees to comply with all other applicable federal statutes, regulations, and executive orders, and Recipient shall provide for such compliance by other parties in any agreements it enters into with other parties relating to this award.<br>b. Federal regulations applicable to this award include, without limitation, the following:<br>i. Uniform Administrative Requirements, Cost Principles, and Audit Requirements for Federal Awards, 2 CFR Part 200, other than such provisions as Treasury may determine are inapplicable to this Award and subject to such exceptions as may be otherwise provided by Treasury. Subpart F – Audit Requirements of the Uniform Guidance, implementing the Single Audit Act, shall apply to this award.<br>ii. Universal Identifier and System for Award Management (SAM), 2 CFR Part 25, pursuant to which the award term set forth in Appendix A to 2 CFR Part 25 is hereby incorporated by reference. | Section 9901 of the American Rescue Plan Act, Pub. L. No. 117-2;<br>Section 602(b), 603(b) and/or 603(c) as applicable | Contractor RFP/IFB<br>Contractor RFQ<br>Subrecipients<br>Vendors |

| THRESHOLD | PROVISION | CITATION | PROVISION APPLIES TO |
|---|---|---|---|
| | iii. Reporting Subaward and Executive Compensation Information, 2 CFR Part 170, pursuant to which the award term set forth in Appendix A to 2 CFR Part 170 is hereby incorporated by reference.<br>iv. OMB Guidelines to Agencies on Governmentwide Debarment and Suspension (Non-procurement), 2 CFR Part 180, including the requirement to include a term or condition in all lower tier covered transactions (contracts and subcontracts described in 2 CFR Part 180, subpart B) that the award is subject to 2 CFR Part 180 and Treasury's implementing regulation at 31 CFR Part 19.<br>v. Recipient Integrity and Performance Matters, pursuant to which the award term set forth in 2 CFR Part 200, Appendix XII to Part 200 is hereby incorporated by reference.<br>vi. Governmentwide Requirements for Drug-Free Workplace, 31 CFR Part 20. (Subrecipient Only)<br>vii. New Restrictions on Lobbying, 31 CFR Part 21.<br>viii. Uniform Relocation Assistance and Real Property Acquisitions Act of 1970 (42 U.S.C. §§ 4601-4655) and implementing regulations.<br>ix. Generally applicable federal environmental laws and regulations.<br><br>c. Statutes and regulations prohibiting discrimination applicable to this award include, without limitation, the following:<br>i. Title VI of the Civil Rights Act of 1964 (42 U.S.C. §§ 2000d et seq.) and Treasury's implementing regulations at 31 CFR Part 22, which prohibit discrimination on the basis of race, color, or national origin under programs or activities receiving federal financial assistance;<br>ii. The Fair Housing Act, Title VIII of the Civil Rights Act of 1968 (42 U.S.C. §§ 3601 et seq.), which prohibits discrimination in housing on the basis of race, color, religion, national origin, sex, familial status, or disability;<br>iii. Section 504 of the Rehabilitation Act of 1973, as amended (29 U.S.C. § 794), which prohibits discrimination on the basis of disability under any program or activity receiving federal financial assistance;<br>iv. The Age Discrimination Act of 1975, as amended (42 U.S.C. §§ 6101 et seq.), and Treasury's implementing regulations at 31 CFR Part 23, which prohibit discrimination on the basis of age in programs or activities receiving federal financial assistance; and<br>v. Title II of the Americans with Disabilities Act of 1990, as amended (42 U.S.C. §§ 12101 et seq.), which prohibits discrimination on the basis of disability under programs, activities, and services provided or made available by state and local governments or instrumentalities or agencies thereto. | | |
| ARPA Terms, Conditions, & Records | 10. Remedial Actions. In the event of Recipient's noncompliance with section 603 of the Act, other applicable laws, Treasury's implementing regulations, guidance, or any reporting or other program requirements, Treasury may impose additional conditions on the receipt of a subsequent tranche of future award funds, if any, or take other available remedies as set forth in 2 CFR § 200.339. In the case of a violation of section 603(c) of the Act regarding the use of funds, previous payments shall be subject to recoupment as provided in section 603(e) of the Act. | Section 9901 of the American Rescue Plan Act, Pub. L. No. 117-2;<br>Section 602(b), 603(b) and/or 603(c) as applicable | Subrecipients |
| ARPA Terms, Conditions, & Records | 11. Hatch Act. Recipient agrees to comply, as applicable, with requirements of the Hatch Act (5 U.S.C. §§ 1501-1508 and 7324-7328), which limit certain political activities of State or local government employees whose principal employment is in connection with an activity financed in whole or in part by this federal assistance. | Section 9901 of the American Rescue Plan Act, Pub. L. No. 117-2;<br>Section 602(b), 603(b) and/or 603(c) as applicable | Subrecipients |
| ARPA Terms, Conditions, & Records | 12. False Statements. Recipient understands that making false statements or claims in connection with this award is a violation of federal law and may result in criminal, civil, or administrative sanctions, including fines, imprisonment, civil damages and penalties, debarment from participating in federal awards or contracts, and/or any | Section 9901 of the American Rescue Plan Act, Pub. L. No. 117-2;<br>Section 602(b), | Contractor RFP/IFB<br>Contractor RFQ<br>Subrecipients<br>Vendors |

| THRESHOLD | PROVISION | CITATION | PROVISION APPLIES TO |
|---|---|---|---|
| | other remedy available by law. | 603(b) and/or 603(c) as applicable | |
| ARPA Terms, Conditions, & Records | 13. Publications. Any publications produced with funds from this award must display the following language: "This project [is being] [was] supported, in whole or in part, by federal award number [enter project FAIN] awarded to [name of Recipient] by the U.S. Department of the Treasury." | Section 9901 of the American Rescue Plan Act, Pub. L. No. 117-2; Section 602(b), 603(b) and/or 603(c) as applicable | Subrecipients |
| ARPA Terms, Conditions, & Records | 14. Debts Owed the Federal Government.<br>a. Any funds paid to Recipient (1) in excess of the amount to which Recipient is finally determined to be authorized to retain under the terms of this award; (2) that are determined by the Treasury Office of Inspector General to have been misused; or (3) that are determined by Treasury to be subject to a repayment obligation pursuant to section 603(e) of the Act and have not been repaid by Recipient shall constitute a debt to the federal government.<br>b. Any debts determined to be owed the federal government must be paid promptly by Recipient. A debt is delinquent if it has not been paid by the date specified in Treasury's initial written demand for payment, unless other satisfactory arrangements have been made or if the Recipient knowingly or improperly retains funds that are a debt as defined in paragraph 14(a). Treasury will take any actions available to it to collect such a debt. | Section 9901 of the American Rescue Plan Act, Pub. L. No. 117-2; Section 602(b), 603(b) and/or 603(c) as applicable | Subrecipients |
| ARPA Terms, Conditions, & Records | 15. Disclaimer.<br>a. The United States expressly disclaims any and all responsibility or liability to Recipient or third persons for the actions of Recipient or third persons resulting in death, bodily injury, property damages, or any other losses resulting in any way from the performance of this award or any other losses resulting in any way from the performance of this award or any contract, or subcontract under this award.<br>b. The acceptance of this award by Recipient does not in any way establish an agency relationship between the United States and Recipient. | Section 9901 of the American Rescue Plan Act, Pub. L. No. 117-2; Section 602(b), 603(b) and/or 603(c) as applicable | Subrecipients |
| ARPA Terms, Conditions, & Records | 16. Protections for Whistleblowers.<br>c. In accordance with 41 U.S.C. § 4712, Recipient may not discharge, demote, or otherwise discriminate against an employee in reprisal for disclosing to any of the list of persons or entities provided below, information that the employee reasonably believes is evidence of gross mismanagement of a federal contract or grant, a gross waste of federal funds, an abuse of authority relating to a federal contract or grant, a substantial and specific danger to public health or safety, or a violation of law, rule, or regulation related to a federal contract (including the competition for or negotiation of a contract) or grant.<br>d. The list of persons and entities referenced in the paragraph above includes the following:<br>i. A member of Congress or a representative of a committee of Congress;<br>ii. An Inspector General;<br>iii. The Government Accountability Office;<br>iv. A Treasury employee responsible for contract or grant oversight or management;<br>v. An authorized official of the Department of Justice or other law enforcement agency;<br>vi. A court or grand jury; or<br>vii. A management official or other employee of Recipient, contractor, or subcontractor who has the responsibility to investigate, discover, or address misconduct.<br>c. Recipient shall inform its employees in writing of the rights and remedies provided | Section 9901 of the American Rescue Plan Act, Pub. L. No. 117-2; Section 602(b), 603(b) and/or 603(c) as applicable | Contractor RFP/IFB<br>Contractor RFQ<br>Subrecipients<br>Vendors |

| THRESHOLD | PROVISION | CITATION | PROVISION APPLIES TO |
|---|---|---|---|
| | under this section, in the predominant native language of the workforce. | | |
| ARPA Terms, Conditions, & Records | 17. Increasing Seat Belt Use in the United States. Pursuant to Executive Order 13043, 62 FR 19217 (Apr. 18, 1997), Recipient should encourage its contractors to adopt and enforce on-the-job seat belt policies and programs for their employees when operating company-owned, rented or personally owned vehicles. | Section 9901 of the American Rescue Plan Act, Pub. L. No. 117-2; Section 602(b), 603(b) and/or 603(c) as applicable | Contractor RFP/IFB<br>Contractor RFQ<br>Subrecipients<br>Vendors |
| ARPA Terms, Conditions, & Records | 18. Reducing Text Messaging While Driving. Pursuant to Executive Order 13513, 74 FR 51225 (Oct. 6, 2009), Recipient should encourage its employees, subrecipients, and contractors to adopt and enforce policies that ban text messaging while driving, and Recipient should establish workplace safety policies to decrease accidents caused by distracted drivers | Section 9901 of the American Rescue Plan Act, Pub. L. No. 117-2; Section 602(b), 603(b) and/or 603(c) as applicable | Contractor RFP/IFB<br>Contractor RFQ<br>Subrecipients<br>Vendors |

## Exhibit C – Other Related Information

To be inserted

## Exhibit D – Insurance Certificate

To be inserted

## Exhibit E – Bid, Performance, and Payment Bonds

To be inserted

## Exhibit F – Eligibility Verification (SAM.gov)

Vendor to provide a dated printout of their active status without exclusions from SAM.gov website

## Exhibit G – Certificate of Interested Parties (Form 1295)

Form 1295 (Certificate of Interested Parties) must be completed on the Texas Ethics Commission's website as part of this project prior to contract execution. Form 1295 can be accessed here: https://www.ethics.state.tx.us/filinginfo/1295/ and must be returned with the certification number assigned after completion

# Addendum 1
# 10/22/24
# LM 24-17 Mini Excavator

Is a Bid bond required?

**No, a bid bond is not required**

I missed the pre-bid conference. Does this disqualify me from submitting a proposal?

**No. The City has waived the mandatory pre-bid attendance requirement.**

Could the City please clarify if they will allow electronic submission via their bid submission portal, or if only mailed/hand delivered responses will be accepted?

**You may submit your response either by mail or through an electronic upload; both methods are not required.**

For digital delivery: the subject line of the email should include the Respondent's Name, RFP number, and the time/due date of the RFP. The completed response, along with all attachments, should be uploaded to the following point of contact: **Bidsubmit.cityoflamarque.org**

If the response is mailed or hand-delivered, sealed proposals (an original and 3 copies) must be submitted on the original forms provided. Each response must be sealed and placed in a properly identified envelope, including the Respondent's Name, RFP number, and the time/due date of the RFP.

**Mailed/hand-delivered submissions should be addressed to:**
**City Clerk**
**1111 Bayou Road**
**La Marque, TX 77568**

# Addendum - 2
# 10/30/2024
# IFB-24-17 Mini Excavator

**BIDS WILL BE OPENED AND READ ALOUD:**

Thursday, October 31, 2024, at 11:00 AM  1109-B Bayou

Road La Marque, TX 77568

# BID OPENING SHEET

1

**Contract:** LM 24-17

**Project:** Mini Excavator

**Bid Date:** October 31, 2024 at 11:00 A.M. in the City Council Chamber Room, 1109-B Bayou Road, La Marque, Texas, 77573

**Bidder # 1:** R.B. Everett & Co. (Opt.1) **Bid Amt:** $85,292.00 Cas

**Bidder # 2:** R.B. Everett & Co. (Opt.2) **Bid Amt:** $73,030.00 Can

**Bidder # 3:** King Ranch AG & Turf **Bid Amt:** $113,871.84

**Bidder # 4:** Mustang CAT **Bid Amt:** $125,266.88

**Bidder # 5:** Asco **Bid Amt:** $ 113,000.00

**Bidder # 6:** _____ **Bid Amt:** _____

**Bidder # 7:** _____ **Bid Amt:** _____

**Bidder # 8:** _____ **Bid Amt:** _____

**Bidder # 9:** _____ **Bid Amt:** _____

**Bidder # 10:** _____ **Bid Amt:** _____

**Bids Opened and Read By:** Amanda Jobby 10.31.24

**Bids Recorded and Witnessed By:** Kasey C. Lott

**BID TABULATION**
**LM 24-17**
**Mini-Excavator**

| Bidder | Bid Complete (Yes/No) | Amount |
|---|---|---|
| RB Everett | Yes | 85,292.00 |
| BB Everett | Yes | 73,030.00 |
| King Ranch | ? | 113,871.84 |
| Mustang CAT | Yes | 125,2666.88 |
| Asco | Yes | |
| | | |
| | | |
| | | |
| | | |
| | | |
| | | |
| | | |
| | | |
| | | |
| | | |
| | | |
| | | |
| | | |
| | | |
| | | |
| | | |
| | | |
| | | |
| | | |
| | | |

**RATING SHEET – REQUEST FOR PROPOSALS (RFP)**
**COMPETITIVE PROCUREMENT FOR GENERAL SERVICES, SUPPLIES, AND/OR EQUIPMENT**

| | |
|---|---|
| Entity Name: | City of La Marque |
| IFB Title or Number: | 2024 Mini-Excavator |
| Source of Funds: | American Rescue Plan Act (ARPA) (list others) |
| Evaluator's Name: | Amanda Hebby |
| Name of Respondent: | ASCO |
| Date of Rating: | November 4, 2024 |

Each evaluation committee member shall independently assess the content of each response using only the evaluation criteria and weights published in the solicitation and award points up to the maximum listed for each factor. Information necessary to assess the Respondent on these criteria may be gathered from past experience with the Respondent, from the Respondent's proposal response, and/or by contacting past/current clients (references) of the Respondent. Respondents proposing to offer specific services (if allowed in IFB) should be scored only on those services. Rate Respondent in the following areas:

**Pass/Fail Criteria**

| | Factor | Pass | Fail | Comments |
|---|---|---|---|---|
| 1. | Responsiveness of Proposal | ✓ | | |
| 2. | Financial Stability | ✓ | | |
| **Must pass all above areas to proceed. If a Fail is marked, stop here.** | | | | |

**Total Score (A + B + C)**

| | Factor | Maximum Points | Score | Comments |
|---|---|---|---|---|
| A. | **Understanding of Work, Experience, and Relevant Qualifications** – Experience in services similar in size and scope; total number and types of employees, skills, knowledge and abilities, company background history, number of years in providing similar services. | 20 | 10 | |
| B. | **Capacity to Perform and Delivery/Service Schedule** – Demonstrated capacity to provide goods or services within the prescribed delivery date and time. Provided references should be considered in this evaluation. | 20 | 10 | |
| C. | **Pricing** – Prices for all goods and/or services shall be all inclusive and valid for 90 days. | 60 | 60 | |
| | **TOTAL AVAILABLE POINTS** | **100** | | |

# City of La Marque

1111 Bayou Road
La Marque, Texas 77568

## REQUEST FOR PROPOSALS (RFP)
## COMPETITIVE PROCUREMENT FOR
## GENERAL SERVICES, SUPPLIES, AND/OR EQUIPMENT

This RFP is being supported

by federal award number [RCP-056096]

allocated to the

## City of La Marque

under the

**American Rescue Plan Act (ARPA)**

**Coronavirus State and Local Fiscal Recovery Funds (SLFRF)**

**by the U.S. Department of the Treasury**

ASCO
Mini EXC

**Prepared By: Department of Public Works**

## ATTACHMENT A:

## SOLICITATION RESPONSE COVER SHEET/ACKNOWLEDGMENT OF ADDENDA/SUBMISSION CHECKLIST

| | |
|---|---|
| **Title of Solicitation:** | LM 24-17 Mini Excavator |
| **Name of Respondent:** | TIMOTHY GATES |
| **Company:** | ASSOCIATED SUPPLY COMPANY, INC. DBA ASCO EQUIPMENT |
| **Mailing Address:** | 6203 LONG DR, |
| **City, State, Zip:** | HOUSTON, TX 77087 |
| **Phone Number:** | 281-627-5148 |
| **Company Contact Email Address:** | TGATES@ASCOEQ.COM |
| **Texas Vendor ID Number:** | 1751386410200 / 06180 |
| **EIN/Federal Tax Identification Number:** | 75-1386410 |

### ACKNOWLEDGEMENT OF ADDENDA

| ADDENDUM NO. | DATE ISSUED |
|---|---|
| ADDENDUM NO. 1 | 10/22/2024 |
| ADDENDUM NO. 2 | 10/30/2024 |
| | |
| | |

☐ Please check this box if no addenda were issued.

## ATTACHMENT A (CONTINUED)

### SOLICITATION RESPONSE COVER SHEET/ACKNOWLEDGMENT OF ADDENDA/ SUBMISSION CHECKLIST

This checklist is provided for the Respondent's use in assuring compliance with required documentation; however, it does not include all specification requirements and does not relieve the Respondent of the need to read and comply with the specifications. Your submittal of the documents attests to the fact that you have read and/or included the documents with your response.

**SUBMISSION CHECKLIST**

| CHECK FOR COMPLETION | DOCUMENTS REQUIRED FOR SUBMISSION |
|---|---|
| ☑ | A. Solicitation Response Cover Sheet/Acknowledgement of Addenda/Submission Checklist |
| ☑ | B. Pricing Sheet |
| ☑ | C. System for Award Management (SAM.gov) Record Search |
| ☑ | D. Customer/Client References |
| ☑ | E. Certificate of Insurance (if applicable) |
| ☑ | F. Ethics and Conflict of Interest Acknowledgement |
| ☑ | G. Statement of Conflicts of Interest (if any) |
| ☑<br>☑ | H. Conflict of Interest Questionnaire (Form CIQ)<br>Please check this box if the Respondent does not identify a conflict of interest and therefore, will not be submitting the Conflict of Interest Questionnaire Form CIQ. |
| ☑<br>☑ | I. Disclosure of Lobbying Activities SF-LLL Certification<br>(Required for all proposals exceeding $100,000)<br>Please check this box if the proposal does not exceed $100,000. |
| N/A | J. Texas Ethics Commission Certificate of Interested Parties (Form 1295)<br>(This is a sample and is only required to be completed by the Respondent selected for award.) |
| ☑ | K. Bidder's Certification |
| ☑ | L. Non-Collusion Affidavit |
| ☐ | |
| ☐ | |

The Respondent's authorized agent must sign this document to acknowledge having read this solicitation carefully and completely, including the list of addenda, and that the information submitted is true and correct.

| | |
|---|---|
| **AUTHORIZED AGENT NAME:** | TIMOTHY GATES |
| **AUTHORIZED SIGNATURE:** | *Timothy Gates* |
| **TITLE OF AUTHORIZED AGENT:** | GOVERNMENT SALES MANAGER |
| **DATE OF SIGNATURE:** | 10/30/2024 |

## ATTACHMENT B: PRICING SHEET

Respondent shall complete and submit the following pricing sheet with the proposal response package. The Entity reserves the right to make an award on the basis of best value in the interest of the Entity. ALL PRICING MUST BE FIRM FIXED PRICING.

| ITEM | DESCRIPTION | QUANTITY | UNIT OF MEASURE | UNIT PRICE | EXTENSION |
|---|---|---|---|---|---|
| 1 | Entity should enter the description and quantity of the services/products as contained in the Scope of Work in Exhibit A | 2 | Case CX37C | $56,500.00 | $ 113,000.00 |
| 2 | | | | $ | $ |
| 3 | | | | $ | $ |
| 4 | | | | $ | $ |
| 5 | | | | $ | $ |
| **TOTAL FIRM FIXED PRICE** | | | | | $ 113,000.00 |
| 6 | **DELIVERY** – Number of calendar days for delivery after receipt of the order: | | | 90 calendar days | |

| | |
|---|---|
| Name of Firm: | ASSOCIATED SUPPLY COMPANY, INC. DBA ASCO EQUIPMENT |
| RFP #: | LM 24-17 |
| RFP Name: | Mini Excavator |

### AUTHORIZED AGENT – SIGNATURE AND CONTACT INFORMATION

The Respondent's authorized agent must sign this document to acknowledge they read this solicitation carefully and completely, and the information submitted is true and correct.

| | |
|---|---|
| **SIGNATURE OF AUTHORIZED AGENT:** | Timothy Gates |
| **PRINTED NAME OF AUTHORIZED AGENT:** | TIMOTHY GATES |
| **TITLE OF AUTHORIZED AGENT:** | GOVERNMENT SALES MANAGER |
| **DATE OF SIGNATURE:** | 10/30/2024 |

## ATTACHMENT D: CUSTOMER/CLIENT REFERENCES

Respondents shall use Attachment D to describe a minimum of three (3) and maximum of five (5) references for jobs, and corresponding references, completed within last five (5) years.

**Respondent's Name:** ASSOCIATED SUPPLY COMPANY, INC. DBA ASCO EQUIPMENT

The references shall illustrate recent experience successfully completing work of a similar nature and scope as the work described in this RFP. This form may be modified as needed to comply with the requirement to document company information. ***Failure to return this attachment (or a reasonable facsimile) may result in the proposal being considered non-responsive. Failure to provide references may result in the proposal being considered non-responsive.***

**REFERENCE 1:**

| | |
|---|---|
| **Company Name:** | CITY OF MONT BELVIEU |
| **Company Address:** | 3811 Perry Ave, Mont Belvieu, TX 77523 |
| **Contact Name/Title/Phone:** | MICHAEL MUELLER/ PARKS SUPERVISOR/ 713-903-5027 |
| **Contact Email:** | MMUELLER@MONTBELVIEU.NET |
| **Contract Award Date:** | 10/23/2023 |
| **Contract Completion Date:** | 01/31/2024 |
| **Contract Project Name:** | CITY OF MONT BELVIEU PURCHASE OF GENIE S-65XC |
| **Brief Description of Services:** | PURCHASE OF GENIE S-65XC BOOM LIFT |



## NON-DEBARMENT CERTIFICATION FORM

| | | | |
|---|---|---|---|
| **COMPANY/ENTITY LEGAL NAME:** ASSOCIATED SUPPLY COMPANY, INC | | | |
| **STREET ADDRESS:** 6203 LONG DR | | | |
| **CITY:** HOUSTON | **STATE:** TEXAS | **ZIP:** 77087 | |
| **CONTACT NAME:** TIMOTHY GATES | | | |
| **CONTACT EMAIL:** TGATES@ASCOEQ.COM | | **CONTACT PHONE:** 281-627-5148 | |
| ***UEI #** | ZYF4LBHZBJA3 | ****TIN #** | 75-1386410 |

*Subrecipients are required to have a Unique Entity Identifier (UEI) Number prior to an award. All entities must be pre-vetted for eligibility/ability to perform the outlined ARPA funded scope of work and a record (PDF of SAM.gov screenshot) of SAM debarment clearance must be obtained prior to entering into any final contracts. **Beneficiary Entities are required to have UEI and/or TIN.

**APPLICABLE REGULATIONS: As stated in the ARPA/SLFRF Terms & Conditions:** *"OMB Guidelines to Agencies on Governmentwide Debarment and Suspension (Nonprocurement), 2 CFR Part 180, including the requirement to include a term or condition in all lower tier covered transactions (contracts and subcontracts described in 2 CFR Part 180, subpart B) that the award is subject to 2 CFR Part 180 and Treasury's implementing regulation at 31 CFR Part 19."*

**Also, Federal Executive Order (E.O.) 12549:** "Debarment" requires that contractors, beneficiaries or subrecipient organizations and their principals – who are receiving awards, using federal funds, are not debarred, suspended, proposed for debarment, declared ineligible, or voluntarily excluded by any federal department or agency from doing business with the federal government. By signing this document, you certify that your organization and its principals are not debarred. Failure to comply or attempts to edit this language may disqualify you from receiving or retaining funds. Information on debarment is available at the following website: www.sam.gov

**Be advised that we may pursue available remedies per 2 CFR 180.360 as an ARPA recipient entity:** *"If a federal agency later determines that you failed to tell the [awarding agency] that you were excluded or disqualified at the time you entered into the covered transaction with that person/awarding agency, the agency may pursue any available remedies, including suspension and debarment."*

| [INITIAL] | CERTIFICATION & SIGNATURE |
|---|---|
| ✓ | **We hereby certify that we are not excluded, disqualified, or debarred from receiving federally funded awards.** |
| ✓ | **We hereby confirm that if that status should change within the course of this agreement, we will provide notification immediately. Failure to do so may result in this agreement's termination and/or the repayment of funds.** |

*Your signature certifies that the information provided on this form is correct and that neither you nor your principal(s) is/are presently debarred, suspended, proposed for debarment, declared ineligible, or voluntarily excluded from participation in this transaction by any federal department or agency.*

**SIGNATURE** Timothy Gates

**PRINTED NAME & TITLE** TIMOTHY GATES, GOVERNMENT SALES MANAGER **DATE** 10/31/2024

**FOR DEPARTMENT USE ONLY**

| | | |
|---|---|---|
| SAM Debarment/Certification Record of Clearance | Yes [ ] No [ ] | Note: |
| State of Texas Debarred Vendor List Cleared | Yes [ ] No [ ] | Note: |
| Verified By: | Yes [ ] No [ ] | Date: |

## LIFT CAPACITIES

**8 ft 2 in (2.5 m) Boom, 4 ft 3 in (1.3 m) Arm, Dozer Blade Down** *Canopy unit equipped with 0.11 m³ (SAE heaped) bucket, 12 in (300 mm) rubber track and 900 lb (410 kg) counterweight.*

| Load/Lift Point Height | LOAD RADIUS | | | | | | | | MAXIMUM REACH | | |
|---|---|---|---|---|---|---|---|---|---|---|---|
| | 3 ft (1.0 m) | | 7 ft (2.0 m) | | 10 ft (3.0 m) | | 13 ft (4.0 m) | | REACH | CAPACITY | |
| | END | SIDE | END | SIDE | END | SIDE | END | SIDE | @ | END | SIDE |
| +10 ft (3.0 m) | | | | | | | | | 12 ft 11 in (3.94 m) | 1,170 lb* (530 kg)* | 1,070 lb (490 kg) |
| +7 ft (2.0 m) | | | | | 1,380 lb* (630 kg)* | 1,380 lb* (630 kg)* | 1,210 lb* (550 kg)* | 1,020 lb (460 kg) | 14 ft 7 in (4.45 m) | 1,190 lb* (540 kg)* | 830 lb (380 kg) |
| +3 ft (1.0 m) | | | | | 1,990 lb* (900 kg)* | 1,540 lb (700 kg) | 1,400 lb* (640 kg)* | 970 lb (440 kg) | 15 ft 3 in (4.64 m) | 1,240 lb* (560 kg)* | 750 lb (340 kg) |
| Groundline | | | 2,990 lb* (1 320 kg)* | 2,500 lb (1 130 kg) | 2,410 lb* (1 090 kg)* | 1,440 lb (650 kg) | 1,570 lb* (710 kg)* | 920 lb (420 kg) | 14 ft 11 in (4.55 m) | 1,320 lb* (600 kg)* | 750 lb (340 kg) |
| -3 ft (-1.0 m) | 3,840 lb* (1 740 kg)* | 3,840 lb* (1 740 kg)* | 4,330 lb* (1 960 kg)* | 2,800 lb (1 270 kg) | 2,390 lb* (1 090 kg)* | 1,410 lb (640 kg) | 1,520 lb* (690 kg)* | 910 lb (410 kg) | 13 ft 8 in (4.17 m) | 1,400 lb* (640 kg)* | 860 lb (390 kg) |
| -7 ft (-2.0 m) | 5,680 lb* (2 580 kg)* | 5,680 lb* (2 580 kg)* | 3,190 lb* (1 450 kg)* | 2,980 lb (1 310 kg) | 1,840 lb* (830 kg)* | 1,460 lb (660 kg) | | | 11 ft 0 in (3.36 m) | 1,470 lb* (670 kg)* | 1,230 lb (560 kg) |

NOTE: Lifting capacity are based on ISO 10567.
Lifting capacity does not exceed 75% of tipping load with the machine on firm, level ground or 87% of full hydraulic capacity.
The lift point is a hook located on the back of the bucket.
*Indicates load limited by hydraulic capacity.

**8 ft 2 in (2.5 m) Boom, 5 ft 3 in (1.6 m) Arm, Dozer Blade Down** *Canopy unit equipped with 0.11 m³ (SAE heaped) bucket, 12 in (300 mm) rubber track and 1,235 lb (560 kg) counterweight.*

| Load/Lift Point Height | LOAD RADIUS | | | | | | | | MAXIMUM REACH | | |
|---|---|---|---|---|---|---|---|---|---|---|---|
| | 3 ft (1.0 m) | | 7 ft (2.0 m) | | 10 ft (3.0 m) | | 13 ft (4.0 m) | | REACH | CAPACITY | |
| | END | SIDE | END | SIDE | END | SIDE | END | SIDE | @ | END | SIDE |
| +10 ft (3.0 m) | | | | | | | 970 lb* (440 kg)* | 970 lb* (440 kg)* | 14 ft 2 in (4.32 m) | 970 lb* (440 kg)* | 970 lb* (440 kg)* |
| +7 ft (2.0 m) | | | | | | | 1,060 lb* (480 kg)* | 1,060 lb* (480 kg)* | 15 ft 8 in (4.78 m) | 940 lb* (420 kg)* | 840 lb (380 kg) |
| +3 ft (1.0 m) | | | 3,710 lb* (1 680 kg)* | 3,390 lb (1 540 kg) | 1,770 lb* (800 kg)* | 1,760 lb (800 kg) | 1,290 lb* (590 kg)* | 1,110 lb (500 kg) | 16 ft 3 in (4.95 m) | 990 lb* (450 kg)* | 760 lb (350 kg) |
| Groundline | | | 3,060 lb* (1 390 kg)* | 3,060 lb* (1 390 kg)* | 2,300 lb* (1 040 kg)* | 1,630 lb (740 kg) | 1,510 lb* (680 kg)* | 1,050 lb (470 kg) | 16 ft 0 in (4.87 m) | 1,140 lb* (520 kg)* | 760 lb (350 kg) |
| -3 ft (-1.0 m) | 3,040 lb* (1 380 kg)* | 3,040 lb* (1 380 kg)* | 4,610 lb* (2 090 kg)* | 3,090 lb (1 400 kg) | 2,420 lb* (1 100 kg)* | 1,580 lb (720 kg) | 1,560 lb* (710 kg)* | 1,020 lb (460 kg) | 14 ft 10 in (4.52 m) | 1,250 lb* (570 kg)* | 850 lb (380 kg) |
| -7 ft (-2.0 m) | 4,610 lb* (2 090 kg)* | 4,610 lb* (2 090 kg)* | 3,720 lb* (1 690 kg)* | 3,160 lb (1 430 kg) | 2,080 lb* (940 kg)* | 1,600 lb (730 kg) | | | 12 ft 6 in (3.81 m) | 1,340 lb* (610 kg)* | 1,120 lb (510 kg) |

NOTE: Lifting capacity are based on ISO 10567.
Lifting capacity does not exceed 75% of tipping load with the machine on firm, level ground or 87% of full hydraulic capacity.
The lift point is a hook located on the back of the bucket.
*Indicates load limited by hydraulic capacity.

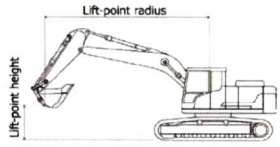


END = 

SIDE = 

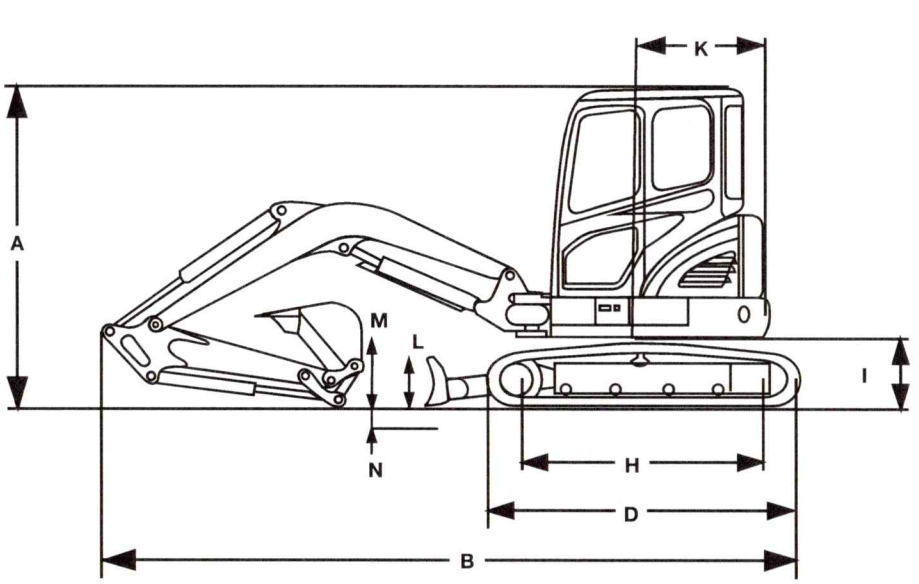


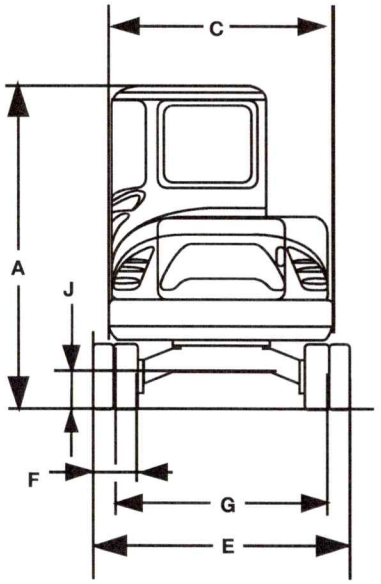


Line drawings are for illustrative purpose only and may not be exact representation of unit.

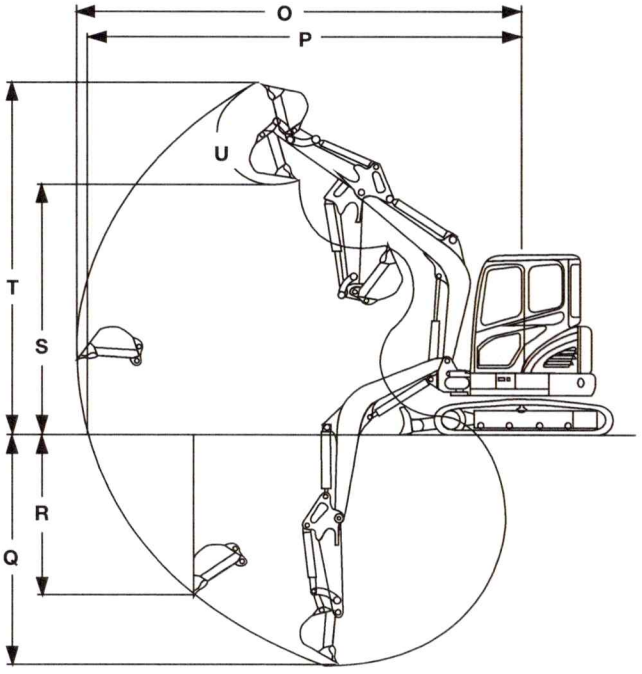


## DIMENSIONS

| | 4 ft 3 in (1.3 m) Arm |
|---|---|
| **A.** Overall height | 8 ft 2 in (2 500 mm) |
| **B.** Overall transport length | 15 ft 9 in (4 790 mm) |
| **C.** Width of upper structure | 5 ft 0 in (1 530 mm) |
| **D.** Track overall length | 7 ft 0 in (2 130 mm) |
| **E.** Track overall width | 5 ft 9 in (1 740 mm) |
| **F.** Track shoe width | 12 in (300 mm) |
| **G.** Track gauge | 4 ft 9 in (1 440 mm) |
| **H.** Center to center – idler to sprocket | 5 ft 7 in (1 700 mm) |
| **I.** Upper structure ground clearance | 1 ft 9 in (540 mm) |
| **J.** Minimum ground clearance | 11 in (290 mm) |
| **K.** Tail swing radius: | |
| Standard counterweight | 2 ft 10 in (870 mm) |
| Additional counterweight | 3 ft 3 in (985 mm) |
| Boom swing | 75° left/50° right |
| Tail swing overhang: | |
| Standard counterweight | 0 in (0 mm) |
| Additional counterweight | 5 in (115 mm) |

## BLADE SPECS

| | Standard Blade | Angled Blade |
|---|---|---|
| **L.** Backfill blade height | 1 ft 3 in (370 mm) | 1 ft 4 in (407 mm) |
| **M.** Backfill blade rise above ground | 1 ft 3 in (375 mm) | 1 ft 5 in (428 mm) |
| **N.** Backfill blade dig depth | 1 ft 3 in (390 mm) | 1 ft 5 in (440 mm) |
| Backfill blade width | 5 ft 9 in (1 740 mm) | 5 ft 9 in (1 740 mm) |

## PERFORMANCE SPECS

| | 4 ft 3 in (1.3 m) Arm | 5 ft 3 in (1.6 m) Arm |
|---|---|---|
| **O.** Maximum dig radius | 17 ft 5 in (5 315 mm) | 18 ft 5 in (5 605 mm) |
| **P.** Dig radius at groundline | 17 ft 1 in (5 200 mm) | 18 ft 0 in (5 495 mm) |
| **Q.** Maximum dig depth | 10 ft 3 in (3 135 mm) | 11 ft 3 in (3 440 mm) |
| **R.** Vertical straight wall dig depth | 7 ft 2 in (2 190 mm) | 8 ft 5 in (2 565 mm) |
| **S.** Dump height | 11 ft 3 in (3 425 mm) | 11 ft 10 in (3 615 mm) |
| **T.** Overall reach height | 15 ft 9 in (4 810 mm) | 16 ft 7 in (5 010 mm) |
| **U.** Bucket rotation | 180° | 180° |
| Arm digging force – ISO | 4,390 lbf (1 990 kgf/19.5 kN) | 3,800 lbf (1 720 kgf/16.9 kN) |
| Bucket digging force – ISO | 6,900 lbf (3 130 kgf/30.7 kN) | 6,900 lbf (3 130 kgf/30.7 kN) |

CASE CONSTRUCTION

# CX37C

MINI EXCAVATOR

**TIER 4 FINAL CERTIFIED**



## ENGINE

| | |
|---|---|
| Model | Yanmar 3TNV88F-ESHYB |
| Emissions Certification | Tier 4 Final |
| Fuel | Diesel |
| Cylinders | 3 |
| Displacement | 100.2 in³ (1 642 cc) |
| Fuel injection | Mechanical w/electronic governor |
| Gross horsepower – SAE J1995 @ 2200 RPM: | 24.4 hp (18.2 kW) |
| Net horsepower – SAE J1349 @ 2200 RPM: | 23.7 hp (17.7 kW) |
| Maximum Engine Torque @ 1200 RPM: | 69.4 lb ft (94.1 Nm) |
| Cooling | Water-cooled |

## DRIVETRAIN

| | |
|---|---|
| Travel speeds: | |
| 1st | 1.6 mph (2.5 kph) |
| 2nd | 2.6 mph (4.2 kph) |
| Maximum traction force | 6,835 lb (3 100 kg) |
| Gradeability | 30° (58%) |
| Ground pressure: | |
| Canopy | N/A |
| Cab | 4.83 psi (0.34 kgf/cm²) |

## ELECTRICAL

| | |
|---|---|
| Voltage | 12 Volts |
| Alternator rating | 55 amp |
| Battery | 1 x 12 V x 70 Ah 750 CCA |

## OPERATOR ENVIRONMENT

ROPS/FOPS four post canopy or enclosed cab; ISO 6396:2008 sound pressure level LpA=75bB (A); Pilot operated hand controls and foot pedals; Adjustable seat w/seat belt; Arm rests; 12V socket.

Display includes:
Engine oil pressure warning lamp; Battery charging warning lamp; Engine preheat pilot lamp; Engine coolant temp warning lamp; Air cleaner warning lamp; Overload warning lamp; Travel speed pilot lamp; Fuel low level warning lamp; Air cleaner warning lamp; Hyd. quick coupler lock lamp; Engine coolant temp gauge; Fuel gauge and Hour meter.

## OPERATING WEIGHT

| | |
|---|---|
| Canopy operating weight: | |
| Short arm | 7,990 lb (3 625 kg) |
| Long arm w/additional counterweight | 8,350 lb (3 790 kg) |
| Cab operating weight: | |
| Short arm | 8,300 lb (3 765 kg) |
| Long arm w/additional counterweight | 8,660 lb (3 930 kg) |

NOTE: w/rubber tracks/no quick coupler/bucket/ fluids/full of fuel/165 lb operator.

## HYDRAULICS

| | |
|---|---|
| Main pumps: | Variable displacement tandem axial piston pump + gear pump |
| Max rated flow: | 2 x 9.9 + 6.1 gpm (2 x 37.4 + 23.1 L/min) |
| Auxiliary flow @ 3,278 psi (226 bar): | |
| Primary | 16.0 gpm (60.5 L/min) |
| Secondary | 16.0 gpm (60.5 L/min) |
| System relief pressure: | |
| Standard | 3,271 psi (226 bar) |
| Overload relief valve | 3,556 psi (245 bar) |
| Pilot control hydraulic system: | |
| Pump | Gear Pump |
| Maximum capacity | 2.6 gpm (9.9 L/min) |

Control valves:
Pilot control for boom, arm, bucket, and swing
Mechanical control for left/right travel and backfill blade

| | |
|---|---|
| Swing motor: | Fixed displacement axial piston motor Automatic spring applied hydraulic released brake |
| Travel motor: | Variable displacement axial piston 2-stage planetary Automatic spring applied hydraulic released brake |

## SERVICE CAPACITIES

| | |
|---|---|
| Fuel tank | 10.5 gal (40 L) |
| Hydraulic tank: | |
| Refill capacity | 9.8 gal (37 L) |
| Total system | 15.9 gal (60 L) |
| Engine oil w/filter change | 1.8 gal (6.7 L) |
| Radiator | 1.5 gal (5.5 L) |

## OTHER SPECIFICATIONS

| | |
|---|---|
| Swing speed | 0 – 9.5 RPM |
| Undercarriage: | |
| Track rollers | 1 upper/4 lower each |
| Boom: | |
| Swing | 75° left/50° right |
| Length | 8 ft 2 in (2.5 m) |
| Arm: | |
| Standard length | 4 ft 3 in (1.3 m) |
| Long arm length | 5 ft 3 in (1.6 m) |

# Addendum - 2
# 10/30/2024
# IFB-24-17 Mini Excavator

**BIDS WILL BE OPENED AND READ ALOUD:**

Thursday, October 31, 2024, at 11:00 AM 1109-B Bayou

Road La Marque, TX 77568

## Exhibit A3 – Request for Payment

| | | | |
|---|---|---|---|
| **Project Name:** | LM 24-17 Mini Excavator | | |
| **Vendor Name:** | ASSOCIATED SUPPLY COMPANY, INC. | | |
| **Date of Request:** | 10/30/2024 | | |
| **Contact Name:** | TIMOTHY GATES | | |
| **Contact Phone:** | 281-627-5148 | **Contact Email:** | TGATES@ASCOEQ.COM |

| Item for Payment | Description | Unit Cost or Percent Complete | # of Units | Total Amount |
|---|---|---|---|---|
| CASE CX37C | MINI EXCAVATORS | $56,500.00 | 2 | $113,000.00 |
| | | | | |
| | | | | |
| **TOTAL** | | | | $113,000.00 |

| X | Attachments |
|---|---|
| | |
| | |

| Submitted By | |
|---|---|
| **Name and Title** | TIMOTHY GATES |
| **Signature** | Timothy Gates |

**CERTIFICATION:** I certify that this Request for Payment contains costs associated with the provision of services in accordance with the terms of the contract. I also certify that all required documentary evidence has been submitted along with the Request for Payment as instructed, including any documentation associated with requirement to pay prevailing wages.

By signing this Request for Payment, I certify to the best of my knowledge and belief that information provided in this Request is true, complete, and accurate. I am aware that any false, fictitious, or fraudulent information, or the omission of any material fact, may subject me to criminal, civil or administrative penalties for fraud, false statements, false claims or otherwise.

**WARNING**: Section 1001 of Title 18 U.S. code makes it a criminal offense to make willful, false statements or misrepresentation of any material fact involving the use of or obtain federal funds.

## Exhibit A2 – Payment & Pricing Schedule

The terms for payment for the contract are as follows:

**Payment Schedule:**

Payment will be made within 30 days of a Request for Payment and only after delivery of all services and/or purchases and acceptance by the Entity.

**Pricing Schedule:**

Prices for all goods and/or services shall be all inclusive.

Entity is an agency of the State of Texas and materials and services utilized in the provision of services or purchases may be exempt from state and local taxes. Vendor is responsible for taking full advantage of all tax exemptions applicable to the Project. Entity will deduct from the Requests for Payment and from the Request for Final Payment any taxes paid for materials or services that were entitled to tax exemption.

**Lump Sum Price:** Vendor shall provide pricing in the table below to complete the scope of services contained in **Exhibit A1**, Scope of Work, in accordance with the specifications contained in this document. Costs include all applicable services (i.e. labor, materials, profit, bonding, insurance, permitting, general conditions, and other costs) to provide a turnkey product.

(Note to Entity: Component pricing should be based on the identified components of the scope of work contained in **Exhibit A1**). An example is provided below:

| SCOPE OF WORK | PRICE |
|---|---|
| Sale of Two Case CX37C MINI EXCAVATORS | $ 113,000.00 |
| | $ |
| | $ |
| | $ |
| **TOTAL LUMP SUM PRICE (TOTAL OF ABOVE LINE ITEMS)** | $ 113,000.00 |

**SECTION 5.8 NEW LAWS**

Parties agree that if there is a change in any laws, rules, or regulations affecting the performance related to this Contract and enacted after the Effective Date of this Contract, the Parties will enter into good faith negotiations to renegotiate the affected terms of this Contract.

BY: ASSOCIATED SUPPLY COMPANY, INC
(Entity Official)

TIMOTHY GATES
(Printed Name)

GOVERNMENT SALES MANAGER
(Title)

10/30/2024
(Date)

BY: Timothy Gates
(Vendor's Authorized Representative)

TIMOTHY GATES
(Printed Name)

GOVERNMENT SALES MANAGER
(Title)

10/30/2024
(Date)



NOW, THEREFORE, in consideration of the foregoing recitals and the terms and conditions set forth herein, the Parties hereto do mutually agree as follows:

## SECTION 1. CONTRACT ADMINISTRATION

### SECTION 1.1 CONTACT INFORMATION & NOTICES

For the purposes of this Contract, the Entity's Representative listed below will serve as the primary point of contact for the Vendor. All required reports and communication shall be directed to this liaison and other local personnel as appropriate. The Vendor shall designate a Representative to act on Vendor's behalf for all purposes, including execution of Change Orders and Requests for Payment.

Any notice or communication required or permitted to be given under this Contract must be in writing. The initial contact information of the parties, which one party may change by giving written notice to the other party, are as follows:

| | | | |
|---|---|---|---|
| **Entity Name** | City of La Marque | **Vendor Name** | ASSOCIATED SUPPLY COMPANY, INC. |
| **Entity Address 1** | 1111 Bayou Road | **Vendor Address 1** | 6203 LONG DR, |
| **Entity Address 2** | La Marque, Texas 77568 | **Vendor Address 2** | HOUSTON, TX 77087 |
| | | | |
| **Entity Representative for Project** | | **Vendor Representative for Project** | |
| **Name** | Amanda Hobby | **Name** | TIMOTHY GATES |
| **Title** | Assistant Director of Public Works | **Title** | GOVERNMENT SALES MANAGER |
| **Phone** | (409) 795-7996 | **Phone** | 281-627-5148 |
| **Email** | a.hobby@cityoflamarque.org | **Email** | TGATES@ASCOEQ.COM |
| **Entity Billing Contact** | | **Vendor Billing Contact** | |
| **Name** | Gina Galicia | **Name** | TIMOTHY GATES |
| **Title** | Accounts Payable Clerk | **Title** | GOVERNMENT SALES MANAGER |
| **Phone** | (409) 938-9214 | **Phone** | 281-627-5148 |
| **Email** | g.galicia@cityoflamarque.org | **Email** | TGATES@ASCOEQ.COM |

## NON-COLLUSION AFFIDAVIT

STATE OF TEXAS §
§
COUNTY OF HARRIS § 

By the signature below, the signatory for the bidder certifies that neither he/she nor the firm, corporation, partnership or institution represented by the signatory or anyone acting for the firm bidding this project has violated the antitrust laws of this State, codified at Section 15.01, *et seq.*, Texas Business and Commerce Code, or the Federal antitrust laws, nor communicated directly or indirectly the bid made to any competitor or any other person engaged in the same line of business, nor has the signatory or anyone acting for the firm, corporation or institution submitting a bid committed any other act of collusion related to the development and submission of this bid proposal.

Signature: Timothy Gates

Printed Name: TIMOTHY GATES

Title: GOVERNMENT SALES MANAGER

Company: ASSOCIATED SUPPLY COMPANY, INC.

Date: 10/31/2024

SUBSCRIBED and sworn to before me the undersigned authority by _____ on the _____ day of _____, 20_____ on behalf of said bidder.

_____
Notary Public in and for the
State of Texas

My commission expires: _____

## ATTACHMENT K: BIDDER'S CERTIFICATION

In accordance with Texas Government Code Sections 2252.001 through 2252.004 (relating to bids by nonresident contractors), the pertinent portion of the Act has been extracted and is as follows:

1. "Nonresident bidder" refers to a person who is not a resident.
2. "Resident bidder" refers to a person whose principal place of business is in this state, including a contractor whose ultimate parent company or majority owner has its principal place of business in this state.

A governmental entity may not award a governmental contract to a nonresident bidder unless the nonresident underbids the lowest bid submitted by a responsible resident bidder by an amount that is not less than the greater of the following:

1. the amount by which a resident bidder would be required to underbid the nonresident bidder to obtain a comparable contract in the state in which the nonresident's principal place of business is located; or
2. the amount by which a resident bidder would be required to underbid the nonresident bidder to obtain a comparable contract in the state in which a majority of the manufacturing relating to the contract will be performed.

I certify that ASSOCIATED SUPPLY COMPANY, INC. (Company Name) is a

☑ **Resident bidder of Texas** as defined in Section 2252.001(4), Texas Government Code,

**OR**

☐ **Nonresident bidder** as defined in Section 2252.001(3), Texas Government Code, and our principal place of business is located at _____ (City and State).

**Note: If the Respondent is an out-of-state company, a Certificate of Authority from the Secretary of State to do business in Texas must be provided.**

| | |
|---|---|
| **SIGNATURE** | *Timothy Gates* |
| **NAME OF AUTHORIZED AGENT** | TIMOTHY GATES |
| **TITLE OF AUTHORIZED AGENT** | GOVERNMENT SALES MANAGER |
| **DATE** | 10/30/2024 |

## ATTACHMENT I: DISCLOSURE OF LOBBYING ACTIVITIES
## SF-LLL CERTIFICATION REGARDING LOBBYING
***(TO BE SUBMITTED WITH EACH BID OR OFFER EXCEEDING $100,000)***

The undersigned certifies, to the best of his or her knowledge and belief, that:

(a) No Federal appropriated funds have been paid or will be paid, by or on behalf of the undersigned, to any person for influencing or attempting to influence an officer or employee of an agency, a Member of Congress, an officer or employee of Congress, or an employee of a Member of Congress in connection with the awarding of any Federal contract, the making of any Federal grant, the making of any Federal loan, the entering into of any cooperative agreement, and the extension, continuation, renewal, amendment, or modification of any Federal contract, grant, loan, or cooperative agreement.

(b) If any funds other than Federal appropriated funds have been paid or will be paid to any person for influencing or attempting to influence an officer or employee of any agency, a Member of Congress, an officer or employee of Congress, or an employee of a Member of Congress in connection with this Federal contract, grant, loan, or cooperative agreement, the undersigned shall complete and submit Standard Form-LLL, "Disclosure of Lobbying Activities," in accordance with its instructions.

(c) The undersigned shall require that the language in paragraphs (a) and (b) of this anti-lobbying certification be included in the award documents for all subawards at all tiers (including subcontracts, subgrants, and contracts under grants, loans, and cooperative agreements) and that all subrecipients shall certify and disclose accordingly.

This certification is a material representation of fact upon which reliance was placed when this transaction was made or entered into. Submission of this certification is a prerequisite for making or entering into this transaction imposed by 31, U.S.C. § 1352 (as amended by the Lobbying Disclosure Act of 1995).

The Contractor, ASSOCIATED SUPPLY COMPANY, INC. DBA ASCO EQUIPMENT (Insert business name), certifies or affirms the truthfulness and accuracy of each statement of its certification and disclosure, if any. In addition, the Contractor understands and agrees that the provisions of 31 U.S.C. § 3801 et seq., apply to this certification and disclosure, if any.

| | |
|---|---|
| **SIGNATURE** | *Timothy Gates* |
| **NAME OF AUTHORIZED AGENT** | TIMOTHY GATES |
| **TITLE OF AUTHORIZED AGENT** | GOVERNMENT SALES MANAGER |
| **DATE** | 10/30/2024 |

## CONFLICT OF INTEREST QUESTIONNAIRE
## For vendor doing business with local governmental entity

A complete copy of Chapter 176 of the Local Government Code may be found at http://www.statutes.legis.state.tx.us/Docs/LG/htm/LG.176.htm. For easy reference, below are some of the sections cited on this form.

**Local Government Code § 176.001(1-a):** "Business relationship" means a connection between two or more parties based on commercial activity of one of the parties. The term does not include a connection based on:

(A) a transaction that is subject to rate or fee regulation by a federal, state, or local governmental entity or an agency of a federal, state, or local governmental entity;

(B) a transaction conducted at a price and subject to terms available to the public; or

(C) a purchase or lease of goods or services from a person that is chartered by a state or federal agency and that is subject to regular examination by, and reporting to, that agency.

**Local Government Code § 176.003(a)(2)(A) and (B):**

(a) A local government officer shall file a conflicts disclosure statement with respect to a vendor if:

***

(2) the vendor:

(A) has an employment or other business relationship with the local government officer or a family member of the officer that results in the officer or family member receiving taxable income, other than investment income, that exceeds $2,500 during the 12-month period preceding the date that the officer becomes aware that

(i) a contract between the local governmental entity and vendor has been executed; or

(ii) the local governmental entity is considering entering into a contract with the vendor;

(B) has given to the local government officer or a family member of the officer one or more gifts that have an aggregate value of more than $100 in the 12-month period preceding the date the officer becomes aware that:

(i) a contract between the local governmental entity and vendor has been executed; or

(ii) the local governmental entity is considering entering into a contract with the vendor.

**Local Government Code § 176.006(a) and (a-1)**

(a) A vendor shall file a completed conflict of interest questionnaire if the vendor has a business relationship with a local governmental entity and:

(1) has an employment or other business relationship with a local government officer of that local governmental entity, or a family member of the officer, described by Section 176.003(a)(2)(A);

(2) has given a local government officer of that local governmental entity, or a family member of the officer, one or more gifts with the aggregate value specified by Section 176.003(a)(2)(B), excluding any gift described by Section 176.003(a-1); or

(3) has a family relationship with a local government officer of that local governmental entity.

(a-1) The completed conflict of interest questionnaire must be filed with the appropriate records administrator not later than the seventh business day after the later of:

(1) the date that the vendor:

(A) begins discussions or negotiations to enter into a contract with the local governmental entity; or

(B) submits to the local governmental entity an application, response to a request for proposals or bids, correspondence, or another writing related to a potential contract with the local governmental entity; or

(2) the date the vendor becomes aware:

(A) of an employment or other business relationship with a local government officer, or a family member of the officer, described by Subsection (a);

(B) that the vendor has given one or more gifts described by Subsection (a); or

(C) of a family relationship with a local government officer.

## CONFLICT OF INTEREST QUESTIONNAIRE

**FORM CIQ**

**For vendor doing business with local governmental entity**

**This questionnaire reflects changes made to the law by H.B. 23, 84th Leg., Regular Session.**

This questionnaire is being filed in accordance with Chapter 176, Local Government Code, by a vendor who has a business relationship as defined by Section 176.001(1-a) with a local governmental entity and the vendor meets requirements under Section 176.006(a).

By law this questionnaire must be filed with the records administrator of the local governmental entity not later than the 7th business day after the date the vendor becomes aware of facts that require the statement to be filed. *See* Section 176.006(a-1), Local Government Code.

A vendor commits an offense if the vendor knowingly violates Section 176.006, Local Government Code. An offense under this section is a misdemeanor.

**OFFICE USE ONLY**

Date Received

**1** **Name of vendor who has a business relationship with local governmental entity.**

ASSOCIATED SUPPLY COMPANY, INC.

**2** ☐ **Check this box if you are filing an update to a previously filed questionnaire.** (The law requires that you file an updated completed questionnaire with the appropriate filing authority not later than the 7th business day after the date on which you became aware that the originally filed questionnaire was incomplete or inaccurate.)

**3** **Name of local government officer about whom the information is being disclosed.**

NOT APPLICABLE

Name of Officer

**4** **Describe each employment or other business relationship with the local government officer, or a family member of the officer, as described by Section 176.003(a)(2)(A). Also describe any family relationship with the local government officer. Complete subparts A and B for each employment or business relationship described. Attach additional pages to this Form CIQ as necessary.**

NOT APPLICABLE

A. Is the local government officer or a family member of the officer receiving or likely to receive taxable income, other than investment income, from the vendor?

☐ Yes ☑ No

B. Is the vendor receiving or likely to receive taxable income, other than investment income, from or at the direction of the local government officer or a family member of the officer AND the taxable income is not received from the local governmental entity?

☐ Yes ☑ No

**5** **Describe each employment or business relationship that the vendor named in Section 1 maintains with a corporation or other business entity with respect to which the local government officer serves as an officer or director, or holds an ownership interest of one percent or more.**

NOT APPLICABLE

**6** ☐ Check this box if the vendor has given the local government officer or a family member of the officer one or more gifts as described in Section 176.003(a)(2)(B), excluding gifts described in Section 176.003(a-1).

**7** *Timothy Gates*

Signature of vendor doing business with the governmental entity

10/30/2024

Date

Form provided by Texas Ethics Commission www.ethics.state.tx.us Revised 1/1/2021

## ATTACHMENT F: ETHICS AND CONFLICT OF INTEREST ACKNOWLEDGEMENT

Public servants are expected to conduct themselves impartially and in a manner that inspires public confidence, while ensuring that responsible contractors have fair and equal access to governmental procurement.

The City of La Marque, Galveston County is committed to protection of government integrity, while also facilitating the recruitment and retention of the skilled personnel necessary to support its operations. To achieve this objective, The City of La Marque, Galveston County has established standards of ethical conduct and conflict of interest policies and expects all vendors, contractors, and subrecipients to adhere to the same core principles as described below.

To achieve these standards, it is essential that those doing business with the City of La Marque, Galveston County also observe the ethical standards prescribed here.

I acknowledge that it is a breach of ethics to attempt to influence any public employee, elected official, or department head to violate the standards of ethical conduct set forth in this code.

I further acknowledge that it is a breach of ethics for any employee of City of La Marque, Galveston County or a vendor doing business with the City of La Marque, Galveston County to participate directly or indirectly in a procurement when the employee or vendor knows that:

A. The employee or any member of the employee's immediate family or household has a substantial financial interest in a company responding to a City of La Marque, Galveston County procurement.

B. A business or organization in which the employee or any member of the employee's immediate family has a financial interest pertaining to the procurement.

I understand that it is a breach of ethics to offer, give, or agree to give any employee of City of La Marque, Galveston County, or for any employee to solicit, demand, accept, or agree to accept from a vendor, a gratuity of consequence or any offer of employment in connection with any decision, approval, disapproval, recommendation, preparation, or any part of a program requirement or purchase request influencing the content of specification or procurement standard, rendering of advice, investigation, auditing, or in any other advisory capacity in any proceeding or controversy, any particular matter pertaining to any program requirement, contract or subcontract, or to any solicitation or proposal therefore pending before City of La Marque, Galveston County.

I acknowledge that it is a breach of ethics for any payment, gratuity, or offer of employment to be made by or on behalf of a subcontractor under a contract to the prime contractor or higher tier subcontractor for any contract for City of La Marque, Galveston County as an inducement for the award of a contract or order.

I certify that I have read and understand the ethical standards set forth by City of La Marque, Galveston County and agree to comply with them in all business dealings with the City of La Marque, Galveston County.

Timothy Gates
SIGNATURE, VENDOR AUTHORIZED REPRESENTATIVE

ASSOCIATED SUPPLY COMPANY, INC
COMPANY

TIMOTHY GATES, GOVERNMENT SALES MANAGER
PRINTED NAME, TITLE

10/30/2024
DATE

**REFERENCE 4:**

| | |
|---|---|
| **Company Name:** | CITY OF MONT BELVIEU |
| **Company Address:** | 3811 Perry Ave, Mont Belvieu, TX 77523 |
| **Contact Name/Title/Phone:** | MICHAEL MUELLER 713-903-5027 / |
| **Contact Email:** | mmueller@montbelvieu.net |
| **Contract Award Date:** | 10/05/2022 |
| **Contract Completion Date:** | 03/30/2023 |
| **Contract Project Name:** | PURCHASE OF GENIE 5519 |
| **Brief Description of Services:** | DEALER FOR GENIE 5519 |

**REFERENCE 5:**

| | |
|---|---|
| **Company Name:** | CITY OF HOUSTON |
| **Company Address:** | 100 JAPHET ST, HOUSTON TEXAS |
| **Contact Name/Title/Phone:** | DANIEL DAVIS, FLEET SUPERVISOR 832-395-2005 |
| **Contact Email:** | DANIEL.DAVIS@HOUSTONTX.GOV |
| **Contract Award Date:** | 09/16/2024 |
| **Contract Completion Date:** | 10/23/2024 |
| **Contract Project Name:** | Airman PDS185S-6E AIR COMPRESSORS |
| **Brief Description of Services:** | DEALER FOR AIRMAN |

**REFERENCE 2:**

| | |
|---|---|
| **Company Name:** | GULF COAST AUTHORITY |
| **Company Address:** | 910 BAY AREA BLVD, HOUSTON, TX 77058 |
| **Contact Name/Title/Phone:** | CAL START 832-438-4570 DSTART@gcatx.org |
| **Contact Email:** | DSTART@gcatx.org |
| **Contract Award Date:** | 3/01/2024 |
| **Contract Completion Date:** | 08/12/2024 |
| **Contract Project Name:** | GULF COAST AUTHORITY PURCAHSE OF GENIE 1056 |
| **Brief Description of Services:** | PURCHASE OF GENIE 1056 TELEHANDLER |

**REFERENCE 3:**

| | |
|---|---|
| **Company Name:** | CITY OF BAYTOWN |
| **Company Address:** | 2401 Market St, Baytown, TX 77520 |
| **Contact Name/Title/Phone:** | CITY OF BAYTOWN DAVID OYLER 832-262-1749 |
| **Contact Email:** | DAVID.OYLER@baytown.org |
| **Contract Award Date:** | 09/01/2023 |
| **Contract Completion Date:** | 09/7/2023 |
| **Contract Project Name:** | CITY OF BAYTOWN PURCHASE OF GENIE 1932 |
| **Brief Description of Services:** | DEALER FOR GENIE 1932 SCISSOR LIFT |

## STANDARD EQUIPMENT

### ENGINE

Yanmar 3TNV88F-ESHYB
Glow plug starting aid
Dry type air cleaner with restriction indicator

### ELECTRICAL

12-volt electrical starting system
Heavy-duty battery
Battery Master Switch
Key Start
Anti-Theft-Engine starting passwords
Front working light
Auto-idle feature with on/off switch
Horn
Pre-wired – Telematics ready

### HYDRAULICS

Auxiliary hydraulics – single/bi-directional – and plumbing to arm
Large hydraulic oil cooler
Control pattern selector valve
Cylinder rod protection covers – Backfill blade and Boom

### TRACK DRIVE

Rubber belt tracks
Automatic 2-speed travel
Fully hydrostatic drive system
Sealed and lubricated track rollers
Track tension adjustment – grease type

### UPPER STRUCTURE

Zero tail swing
Standard arm: 4 ft 3 in (1.3 m)
Bucket linkage with lifting hook
Thumb bracket

### OPERATOR ENVIRONMENT

See page 1

### OTHER

Swing boom – 75° left/50° right
Hydraulic backfill blade

### WARRANTY

Base warranty coverage: 2-Year/3,000-Hour Full Machine Limited Warranty

## OPTIONAL EQUIPMENT

### OPERATOR ENVIRONMENT

Cab with Heat and air conditioning and radio with USB and 2 speakers
Travel alarm

### TRACK OPTIONS

Tracks:
Steel Tracks 12 in (300 mm)

### OTHER

Additional counterweight adds 330 lb (150 kg)
Optional long arm: 5 ft 3 in (1.6 m)
Hydraulic quick coupler provision
Hydraulic coupler
Klac coupler
Mechanical coupler
Hydraulic hammer
Beacon
2nd auxiliary circuit
4-way angle blade with 25° left and 25° right angle offset: adds 220 lb (100 kg)

**CaseCE.com**

©2021 CNH Industrial America LLC. All rights reserved. CASE is a trademark registered in the United States and many other countries, owned by or licensed to CNH Industrial N.V., its subsidiaries or affiliates. CNH Industrial Capital is a trademark in the United States and many other countries, owned by or licensed to CNH Industrial N.V., its subsidiaries or affiliates. Printed in U.S.A. Contains 10% post-consumer fiber.

IMPORTANT: CASE Construction Equipment Inc. reserves the right to change these specifications without notice and without incurring any obligation relating to such change. Availability of some models and equipment builds vary according to the country in which the equipment is used. The illustrations and text may include optional equipment and accessories and may not include all standard equipment. Your CASE dealer/distributor will be able to give you details of the products and their specifications available in your area.

Biodiesel Ready

CASE Construction Equipment is biodiesel-friendly. NOTE: All engines meet current EPA emissions regulations. All specifications are stated in accordance with SAE Standards or Recommended Practices, where applicable.

SAFETY NEVER HURTS™ Always read the Operator's Manual before operating any equipment. Inspect equipment before using it, and be sure it is operating properly. Follow the product safety signs and use any safety features provided.

Form No. CCE202108CX37C
Replaces Form No. CCE201806CX37C

**RATING SHEET – REQUEST FOR PROPOSALS (RFP)**
**COMPETITIVE PROCUREMENT FOR GENERAL SERVICES, SUPPLIES, AND/OR EQUIPMENT**

| | |
|---|---|
| Entity Name: | King Ranch AG + Turf |
| IFB Title or Number: | |
| Source of Funds: | American Rescue Plan Act (ARPA) (list others) |
| Evaluator's Name: | Christine Tumel |
| Name of Respondent: | Douglas Moore |
| Date of Rating: | 11-4-2024 |

Each evaluation committee member shall independently assess the content of each response using only the evaluation criteria and weights published in the solicitation and award points up to the maximum listed for each factor. Information necessary to assess the Respondent on these criteria may be gathered from past experience with the Respondent, from the Respondent's proposal response, and/or by contacting past/current clients (references) of the Respondent. Respondents proposing to offer specific services (if allowed in IFB) should be scored only on those services. Rate Respondent in the following areas:

**Pass/Fail Criteria**

| | Factor | Pass | Fail | Comments |
|---|---|---|---|---|
| 1. | Responsiveness of Proposal | ✓ | | |
| 2. | Financial Stability | ✓ | | Trying to locate |
| **Must pass all above areas to proceed. If a Fail is marked, stop here.** | | | | |

**Total Score (A + B + C)**

| | Factor | Maximum Points | Score | Comments |
|---|---|---|---|---|
| A. | **Understanding of Work, Experience, and Relevant Qualifications** – Experience in services similar in size and scope; total number and types of employees, skills, knowledge and abilities, company background history, number of years in providing similar services. | 20 | 5 | |
| B. | **Capacity to Perform and Delivery/Service Schedule** – Demonstrated capacity to provide goods or services within the prescribed delivery date and time. Provided references should be considered in this evaluation. | 20 | 20 | |
| C. | **Pricing** – Prices for all goods and/or services shall be all inclusive and valid for 90 days. | 60 | 60 | |
| | **TOTAL AVAILABLE POINTS** | **100** | 85 | |

**RATING SHEET – REQUEST FOR PROPOSALS (RFP)**
**COMPETITIVE PROCUREMENT FOR GENERAL SERVICES, SUPPLIES, AND/OR EQUIPMENT**

| | |
|---|---|
| Entity Name: | City of La Marque |
| IFB Title or Number: | 2024 Mini Excavators |
| Source of Funds: | American Rescue Plan Act (ARPA) (list others) |
| Evaluator's Name: | Amanda Hobby |
| Name of Respondent: | King Ranch Ag + Turf |
| Date of Rating: | November 4, 2024 |

Each evaluation committee member shall independently assess the content of each response using only the evaluation criteria and weights published in the solicitation and award points up to the maximum listed for each factor. Information necessary to assess the Respondent on these criteria may be gathered from past experience with the Respondent, from the Respondent's proposal response, and/or by contacting past/current clients (references) of the Respondent. Respondents proposing to offer specific services (if allowed in IFB) should be scored only on those services. Rate Respondent in the following areas:

**Pass/Fail Criteria**

| | Factor | Pass | Fail | Comments |
|---|---|---|---|---|
| 1. | Responsiveness of Proposal | ✓ | | |
| 2. | Financial Stability | ✓ | | |
| **Must pass all above areas to proceed. If a Fail is marked, stop here.** | | | | |

**Total Score (A + B + C)**

| | Factor | Maximum Points | Score | Comments |
|---|---|---|---|---|
| A. | **Understanding of Work, Experience, and Relevant Qualifications** – Experience in services similar in size and scope; total number and types of employees, skills, knowledge and abilities, company background history, number of years in providing similar services. | 20 | 15 | |
| B. | **Capacity to Perform and Delivery/Service Schedule** – Demonstrated capacity to provide goods or services within the prescribed delivery date and time. Provided references should be considered in this evaluation. | 20 | 15 | |
| C. | **Pricing** – Prices for all goods and/or services shall be all inclusive and valid for 90 days. | 60 | 60 | |
| | **TOTAL AVAILABLE POINTS** | **100** | 90 | |

King Ranch

Dear Amanda Hobby,

I am writing to express our interest in the Request for Proposals (RFP) for two (2) Mini-Excavators funded with the Coronavirus State and local Fiscal Recovery Fund (SLFRF) and Allocated Under the American Rescue Plan Act (ARPA), Procurement Reference #2232, advertised by the City of La Marque, Texas.

With a proven track record in providing high quality John Deere Equipment, John Deere Parts and Service, our company, King Ranch Ag & Turf, is well positioned to provide exceptional value to the City of La Marque.

Enclosed with this letter is our proposal, outlining our understanding of the equipment requirements, timelines and cost estimate. We have carefully considered the equipment specifications outlined in the RFP and believe that our proposal aligns with those provided by the City of La Marque.

King Ranch Ag & Turfs commitment to quality sales and service make us the ideal partner for the City of La Marque. We appreciate the opportunity to discuss how we can contribute to this initiative.

If you have any questions, please contact me.

Sincerely,

Doug Moore

King Ranch Ag & Turf

Cell: 832-248-4091

Office: 281-338-1300

Dmoore@king-ranch.com

## ATTACHMENT A:

### SOLICITATION RESPONSE COVER SHEET/ACKNOWLEDGMENT OF ADDENDA/SUBMISSION CHECKLIST

| | |
|---|---|
| **Title of Solicitation:** | SLFRF / ARPA |
| **Name of Respondent:** | Douglas Moore |
| **Company:** | King Ranch AG & Turf |
| **Mailing Address:** | 2135 Gulf Freeway South |
| **City, State, Zip:** | League City, Tx 77573 |
| **Phone Number:** | 281-338-1300 |
| **Company Contact Email Address:** | dmoore@King-Ranch.com |
| **Texas Vendor ID Number:** | |
| **EIN/Federal Tax Identification Number:** | 74-2140717 |

### ACKNOWLEDGEMENT OF ADDENDA

| ADDENDUM NO. | DATE ISSUED |
|---|---|
| | |
| | |
| | |
| | |

☑ Please check this box if no addenda were issued.

## ATTACHMENT A (CONTINUED)

### SOLICITATION RESPONSE COVER SHEET/ACKNOWLEDGMENT OF ADDENDA/ SUBMISSION CHECKLIST

This checklist is provided for the Respondent's use in assuring compliance with required documentation; however, it does not include all specification requirements and does not relieve the Respondent of the need to read and comply with the specifications. Your submittal of the documents attests to the fact that you have read and/or included the documents with your response.

**SUBMISSION CHECKLIST**

| CHECK FOR COMPLETION | DOCUMENTS REQUIRED FOR SUBMISSION |
|---|---|
| ☑ | A. Solicitation Response Cover Sheet/Acknowledgement of Addenda/Submission Checklist |
| ☑ | B. Pricing Sheet |
| ☐ | C. System for Award Management (SAM.gov) Record Search - Not Available Online |
| ☑ | D. Customer/Client References |
| ☐ | E. Certificate of Insurance (if applicable) - will Provide |
| ☑ | F. Ethics and Conflict of Interest Acknowledgement |
| ☑ | G. Statement of Conflicts of Interest (if any) |
| ☐ | H. Conflict of Interest Questionnaire (Form CIQ) |
| ☑ | Please check this box if the Respondent does not identify a conflict of interest and therefore, will not be submitting the Conflict of Interest Questionnaire Form CIQ. |
| ☑ | I. Disclosure of Lobbying Activities SF-LLL Certification (Required for all proposals exceeding $100,000) |
| ☐ | Please check this box if the proposal does not exceed $100,000. |
| N/A | J. Texas Ethics Commission Certificate of Interested Parties (Form 1295) (This is a sample and is only required to be completed by the Respondent selected for award.) |
| ☑ | K. Bidder's Certification |
| ☑ | L. Non-Collusion Affidavit |
| ☐ | |
| ☐ | |

The Respondent's authorized agent must sign this document to acknowledge having read this solicitation carefully and completely, including the list of addenda, and that the information submitted is true and correct.

| | |
|---|---|
| **AUTHORIZED AGENT NAME:** | Doug Moore |
| **AUTHORIZED SIGNATURE:** | |
| **TITLE OF AUTHORIZED AGENT:** | Sales Account Manager |
| **DATE OF SIGNATURE:** | 10/30/2024 |

## ATTACHMENT B: PRICING SHEET

Respondent shall complete and submit the following pricing sheet with the proposal response package. The Entity reserves the right to make an award on the basis of best value in the interest of the Entity. ALL PRICING MUST BE FIRM FIXED PRICING.

| ITEM | DESCRIPTION | QUANTITY | UNIT OF MEASURE | UNIT PRICE | EXTENSION |
|---|---|---|---|---|---|
| 1 | Entity should enter the description and quantity of the services/products as contained in the Scope of Work in Exhibit A | | | $ | $ |
| 2 | 35P Compact Excavator | Ø1 | Each | $56,935.92 | $56,935.92 |
| 3 | 35P Compact Excavator | Ø1 | Each | $56,935.92 | $56,935.92 |
| 4 | | | | $ | $ |
| 5 | | | | $ | $ |
| **TOTAL FIRM FIXED PRICE** | | | | | $113,871.84 |
| 6 | **DELIVERY** – Number of calendar days for delivery after receipt of the order: | | | 90 calendar days | |

| | |
|---|---|
| Name of Firm: | King Ranch Ag & Turf |
| RFP #: | Procurement Reference # 2232 |
| RFP Name: | American Rescue Plan (ARPA) |

SIGN HERE

### AUTHORIZED AGENT – SIGNATURE AND CONTACT INFORMATION

The Respondent's authorized agent must sign this document to acknowledge they read this solicitation carefully and completely, and the information submitted is true and correct.

| | |
|---|---|
| **SIGNATURE OF AUTHORIZED AGENT:** | |
| **PRINTED NAME OF AUTHORIZED AGENT:** | Doug Moore |
| **TITLE OF AUTHORIZED AGENT:** | Sales Account Manager |
| **DATE OF SIGNATURE:** | 10/25/2024 |

## NON-DEBARMENT CERTIFICATION FORM

| | | | |
|---|---|---|---|
| **COMPANY/ENTITY LEGAL NAME:** | King Ranch Ag & Turf | | |
| **STREET ADDRESS:** | 2135 Gulf Freeway South | | |
| **CITY:** League City | **STATE:** Texas | **ZIP:** 77573 | |
| **CONTACT NAME:** | Doug Moore | | |
| **CONTACT EMAIL:** | dmoore@King-Ranch.com | **CONTACT PHONE:** | 281-338-1300 |
| ***UEI #** | | ****TIN #** | 74-2140717 |

*Subrecipients are required to have a Unique Entity Identifier (UEI) Number prior to an award. All entities must be pre-vetted for eligibility/ability to perform the outlined ARPA funded scope of work and a record (PDF of SAM.gov screenshot) of SAM debarment clearance must be obtained prior to entering into any final contracts. **Beneficiary Entities are required to have UEI and/or TIN.

**APPLICABLE REGULATIONS: As stated in the ARPA/SLFRF Terms & Conditions:** *"OMB Guidelines to Agencies on Governmentwide Debarment and Suspension (Nonprocurement), 2 CFR Part 180, including the requirement to include a term or condition in all lower tier covered transactions (contracts and subcontracts described in 2 CFR Part 180, subpart B) that the award is subject to 2 CFR Part 180 and Treasury's implementing regulation at 31 CFR Part 19."*

**Also, Federal Executive Order (E.O.) 12549:** "Debarment" requires that contractors, beneficiaries or subrecipient organizations and their principals – who are receiving awards, using federal funds, are not debarred, suspended, proposed for debarment, declared ineligible, or voluntarily excluded by any federal department or agency from doing business with the federal government. By signing this document, you certify that your organization and its principals are not debarred. Failure to comply or attempts to edit this language may disqualify you from receiving or retaining funds. Information on debarment is available at the following website: www.sam.gov

**Be advised that we may pursue available remedies per 2 CFR 180.360 as an ARPA recipient entity:** *"If a federal agency later determines that you failed to tell the [awarding agency] that you were excluded or disqualified at the time you entered into the covered transaction with that person/awarding agency, the agency may pursue any available remedies, including suspension and debarment."*

| [INITIAL] | CERTIFICATION & SIGNATURE |
|---|---|
| DM | **We hereby certify that we are not excluded, disqualified, or debarred from receiving federally funded awards.** |
| DM | **We hereby confirm that if that status should change within the course of this agreement, we will provide notification immediately. Failure to do so may result in this agreement's termination and/or the repayment of funds.** |

*Your signature certifies that the information provided on this form is correct and that neither you nor your principal(s) is/are presently debarred, suspended, proposed for debarment, declared ineligible, or voluntarily excluded from participation in this transaction by any federal department or agency.*

**SIGNATURE** DM

**PRINTED NAME & TITLE** Doug Moore Sales Account Manager

**DATE** 10/25/2024

### FOR DEPARTMENT USE ONLY

| | | |
|---|---|---|
| SAM Debarment/Certification Record of Clearance | Yes [ ] No [ ] | Note: |
| State of Texas Debarred Vendor List Cleared | Yes [ ] No [ ] | Note: |
| Verified By: | Yes [ ] No [ ] | Date: |

## ATTACHMENT D: CUSTOMER/CLIENT REFERENCES

Respondents shall use Attachment D to describe a minimum of three (3) and maximum of five (5) references for jobs, and corresponding references, completed within last five (5) years.

**Respondent's Name:** King Ranch AG & Turf

The references shall illustrate recent experience successfully completing work of a similar nature and scope as the work described in this RFP. This form may be modified as needed to comply with the requirement to document company information. ***Failure to return this attachment (or a reasonable facsimile) may result in the proposal being considered non-responsive. Failure to provide references may result in the proposal being considered non-responsive.***

**REFERENCE 1:**

| | |
|---|---|
| **Company Name:** | City of League City |
| **Company Address:** | 300 West Walker St. League City, Tx 77573 |
| **Contact Name/Title/Phone:** | Wesley Baker - Fleet Mgr 281-554-1311 |
| **Contact Email:** | Baker.Wesley@leaguecitytx.gov |
| **Contract Award Date:** | 10/23/2023 |
| **Contract Completion Date:** | 5/21/2024 |
| **Contract Project Name:** | 4wd Tractor & 22FT Boom Mower. |
| **Brief Description of Services:** | Provided new Tractor with installed Boom Mower for Customer. |

**REFERENCE 2:**

| | |
|---|---|
| **Company Name:** | City of Galveston |
| **Company Address:** | 502 32nd St. Galveston, Tx |
| **Contact Name/Title/Phone:** | David Smith - Executive Director 409-797-3920 |
| **Contact Email:** | dsmith@galvestontx.gov |
| **Contract Award Date:** | 10/2023 |
| **Contract Completion Date:** | 2/14/2024 |
| **Contract Project Name:** | Provided 3 Compact Excavators and Attachments |
| **Brief Description of Services:** | Outfitted 3 Compact Excavators and Attachments for delivery |

**REFERENCE 3:**

| | |
|---|---|
| **Company Name:** | Galveston County Drainage Dist 2 |
| **Company Address:** | 5000 FM 1765 La Marque, Tx 77568 |
| **Contact Name/Title/Phone:** | Landry Cravens - Dist. Manager 409-935-2041 |
| **Contact Email:** | manager@gcdd2.org |
| **Contract Award Date:** | 8/7/2023 |
| **Contract Completion Date:** | 10/5/2023 |
| **Contract Project Name:** | John Deere 4066M HD |
| **Brief Description of Services:** | Make Ready and Delivery of Tractor. |

# ATTACHMENT F: ETHICS AND CONFLICT OF INTEREST ACKNOWLEDGEMENT

Public servants are expected to conduct themselves impartially and in a manner that inspires public confidence, while ensuring that responsible contractors have fair and equal access to governmental procurement.

The City of La Marque, Galveston County is committed to protection of government integrity, while also facilitating the recruitment and retention of the skilled personnel necessary to support its operations. To achieve this objective, The City of La Marque, Galveston County has established standards of ethical conduct and conflict of interest policies and expects all vendors, contractors, and subrecipients to adhere to the same core principles as described below.

To achieve these standards, it is essential that those doing business with the City of La Marque, Galveston County also observe the ethical standards prescribed here.

I acknowledge that it is a breach of ethics to attempt to influence any public employee, elected official, or department head to violate the standards of ethical conduct set forth in this code.

I further acknowledge that it is a breach of ethics for any employee of City of La Marque, Galveston County or a vendor doing business with the City of La Marque, Galveston County to participate directly or indirectly in a procurement when the employee or vendor knows that:

A. The employee or any member of the employee's immediate family or household has a substantial financial interest in a company responding to a City of La Marque, Galveston County procurement.

B. A business or organization in which the employee or any member of the employee's immediate family has a financial interest pertaining to the procurement.

I understand that it is a breach of ethics to offer, give, or agree to give any employee of City of La Marque, Galveston County, or for any employee to solicit, demand, accept, or agree to accept from a vendor, a gratuity of consequence or any offer of employment in connection with any decision, approval, disapproval, recommendation, preparation, or any part of a program requirement or purchase request influencing the content of specification or procurement standard, rendering of advice, investigation, auditing, or in any other advisory capacity in any proceeding or controversy, any particular matter pertaining to any program requirement, contract or subcontract, or to any solicitation or proposal therefore pending before City of La Marque, Galveston County.

I acknowledge that it is a breach of ethics for any payment, gratuity, or offer of employment to be made by or on behalf of a subcontractor under a contract to the prime contractor or higher tier subcontractor for any contract for City of La Marque, Galveston County as an inducement for the award of a contract or order.

I certify that I have read and understand the ethical standards set forth by City of La Marque, Galveston County and agree to comply with them in all business dealings with the City of La Marque, Galveston County.

SIGNATURE, VENDOR AUTHORIZED REPRESENTATIVE

Tony Moore, Sales Rep.
PRINTED NAME, TITLE

King Ranch Ag & Turf
COMPANY

10/25/2024
DATE

## ATTACHMENT I: DISCLOSURE OF LOBBYING ACTIVITIES
## SF-LLL CERTIFICATION REGARDING LOBBYING
***(TO BE SUBMITTED WITH EACH BID OR OFFER EXCEEDING $100,000)***

The undersigned certifies, to the best of his or her knowledge and belief, that:

(a) No Federal appropriated funds have been paid or will be paid, by or on behalf of the undersigned, to any person for influencing or attempting to influence an officer or employee of an agency, a Member of Congress, an officer or employee of Congress, or an employee of a Member of Congress in connection with the awarding of any Federal contract, the making of any Federal grant, the making of any Federal loan, the entering into of any cooperative agreement, and the extension, continuation, renewal, amendment, or modification of any Federal contract, grant, loan, or cooperative agreement.

(b) If any funds other than Federal appropriated funds have been paid or will be paid to any person for influencing or attempting to influence an officer or employee of any agency, a Member of Congress, an officer or employee of Congress, or an employee of a Member of Congress in connection with this Federal contract, grant, loan, or cooperative agreement, the undersigned shall complete and submit Standard Form-LLL, "Disclosure of Lobbying Activities," in accordance with its instructions.

(c) The undersigned shall require that the language in paragraphs (a) and (b) of this anti-lobbying certification be included in the award documents for all subawards at all tiers (including subcontracts, subgrants, and contracts under grants, loans, and cooperative agreements) and that all subrecipients shall certify and disclose accordingly.

This certification is a material representation of fact upon which reliance was placed when this transaction was made or entered into. Submission of this certification is a prerequisite for making or entering into this transaction imposed by 31, U.S.C. § 1352 (as amended by the Lobbying Disclosure Act of 1995).

The Contractor, King Ranch Ag & Turf (insert business name), certifies or affirms the truthfulness and accuracy of each statement of its certification and disclosure, if any. In addition, the Contractor understands and agrees that the provisions of 31 U.S.C. § 3801 et seq., apply to this certification and disclosure, if any.

| | |
|---|---|
| **SIGNATURE** | |
| **NAME OF AUTHORIZED AGENT** | Doug Moore |
| **TITLE OF AUTHORIZED AGENT** | Sales Account Manager |
| **DATE** | 10/25/2024 |

# CERTIFICATE OF INTERESTED PARTIES

**FORM 1295**



Complete Nos. 1 - 4 and 6 if there are interested parties.
Complete Nos. 1, 2, 3, 5, and 6 if there are no interested parties.

**OFFICE USE ONLY**
**CERTIFICATION OF FILING**

**Certificate Number:**
2024-1232144

**Date Filed:**
10/29/2024

**Date Acknowledged:**

**1 Name of business entity filing form, and the city, state and country of the business entity's place of business.**
King Ranch Ag & Turf
League City, TX United States

**2 Name of governmental entity or state agency that is a party to the contract for which the form is being filed.**
City of La Marque

**3 Provide the identification number used by the governmental entity or state agency to track or identify the contract, and provide a description of the services, goods, or other property to be provided under the contract.**
Procurement Ref # 2232
PARTS, SALES, SERVICE OF JOHN DEERE AND OTHER VENDORS OF AGRICULTURAL AND COMMERCIAL EQUIPMENT

| 4 Name of Interested Party | City, State, Country (place of business) | Nature of interest (check applicable) | |
|---|---|---|---|
| | | Controlling | Intermediary |
| | | | |
| | | | |
| | | | |
| | | | |
| | | | |
| | | | |
| | | | |
| | | | |
| | | | |

**5 Check only if there is NO Interested Party.** [X]

**6 UNSWORN DECLARATION**

My name is DENNIS BIELAMOWICZ, and my date of birth is 10/17/1967.

My address is 2202 Lilyglen Court, League City, TX, 77573, USA.
(street) (city) (state) (zip code) (country)

I declare under penalty of perjury that the foregoing is true and correct.

Executed in GALVESTON County, State of TEXAS, on the 29 day of OCT (month), 20 24 (year).

Signature of authorized agent of contracting business entity
(Declarant)

## ATTACHMENT K: BIDDER'S CERTIFICATION

In accordance with Texas Government Code Sections 2252.001 through 2252.004 (relating to bids by nonresident contractors), the pertinent portion of the Act has been extracted and is as follows:

1. "Nonresident bidder" refers to a person who is not a resident.
2. "Resident bidder" refers to a person whose principal place of business is in this state, including a contractor whose ultimate parent company or majority owner has its principal place of business in this state.

A governmental entity may not award a governmental contract to a nonresident bidder unless the nonresident underbids the lowest bid submitted by a responsible resident bidder by an amount that is not less than the greater of the following:

1. the amount by which a resident bidder would be required to underbid the nonresident bidder to obtain a comparable contract in the state in which the nonresident's principal place of business is located; or
2. the amount by which a resident bidder would be required to underbid the nonresident bidder to obtain a comparable contract in the state in which a majority of the manufacturing relating to the contract will be performed.

I certify that King Ranch Ag & Turf (Company Name) is a

☑ **Resident bidder of Texas** as defined in Section 2252.001(4), Texas Government Code,

**OR**

☐ **Nonresident bidder** as defined in Section 2252.001(3), Texas Government Code, and our principal place of business is located at _____ (City and State).

**Note: If the Respondent is an out-of-state company, a Certificate of Authority from the Secretary of State to do business in Texas must be provided.**

| | |
|---|---|
| **SIGNATURE** | |
| **NAME OF AUTHORIZED AGENT** | Sales Account Manager |
| **TITLE OF AUTHORIZED AGENT** | Doug Moore |
| **DATE** | 10/25/2024 |

## NON-COLLUSION AFFIDAVIT

STATE OF TEXAS §
§
COUNTY OF Galveston §

By the signature below, the signatory for the bidder certifies that neither he/she nor the firm, corporation, partnership or institution represented by the signatory or anyone acting for the firm bidding this project has violated the antitrust laws of this State, codified at Section 15.01, *et seq.*, Texas Business and Commerce Code, or the Federal antitrust laws, nor communicated directly or indirectly the bid made to any competitor or any other person engaged in the same line of business, nor has the signatory or anyone acting for the firm, corporation or institution submitting a bid committed any other act of collusion related to the development and submission of this bid proposal.

Signature: _____

Printed Name: Douglas Moore

Title: Sales Account Manager

Company: King Ranch AG & Turf

Date: 10/29/2024

SUBSCRIBED and sworn to before me the undersigned authority by Douglas Moore on the 29 day of October, 2024 on behalf of said bidder.

AREEB AHMAD
Notary ID #132997006
My Commission Expires
April 16, 2025

_____
Notary Public in and for the
State of Texas

My commission expires: 04-16-2025

# EXHIBIT C – OTHER RELEVANT INFORMATION/SPECIAL CONDITIONS

Attach any relevant specifications, e.g., municipal/state code specifications, etc., that will be applicable to this purchase.

JOHN DEERE

## Quote Summary

**Prepared For:**
Amanda Hobby
CITY OF LA MARQUE
Amanda Hobby
431 BAYOU RD
LA MARQUE, TX 77568
Business: 409-938-9200
A.HOBBY@CITYOFLAMARQUE.ORG

**Prepared By:**
Moore Doug
King Ranch Ag & Turf
2135 Gulf Freeway South
League City, TX 77573
Phone: 281-338-1300
dmoore@king-ranch.com

**Procurement Reference #2232**
**Delivery To:**
**1500 Municipal Drive**
**La Marque, TX 77568**

| | |
|---|---|
| **Quote Id:** | 31897861 |
| **Created On:** | 28 October 2024 |
| **Last Modified On:** | 30 October 2024 |
| **Expiration Date:** | 28 February 2025 |

**Equipment Summary**

| | Selling Price | | Qty | | Extended |
|---|---|---|---|---|---|
| JOHN DEERE 35 P-Tier Compact Excavator (Long Arm) - 1FF035PAKPK002703 | $ 56,935.92 | X | 1 | = | $ 56,935.92 |
| JOHN DEERE 35 P-Tier Compact Excavator (Long Arm) | $ 56,935.92 | X | 1 | = | $ 56,935.92 |
| **Equipment Total** | | | | | **$ 113,871.84** |

**Quote Summary**

| | |
|---|---|
| Equipment Total | $ 113,871.84 |
| SubTotal | $ 113,871.84 |
| Est. Service Agreement Tax | $ 0.00 |
| Total | $ 113,871.84 |
| Down Payment | (0.00) |
| Rental Applied | (0.00) |
| **Balance Due** | **$ 113,871.84** |

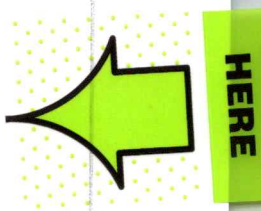


**Salesperson : X** _____

**Accepted By : X** _____

JOHN DEERE

# Selling Equipment

**Quote Id:** 31897861 **Customer:** CITY OF LA MARQUE

## JOHN DEERE 35 P-Tier Compact Excavator (Long Arm) - 1FF035PAKPK002703

**Hours:** 0
**Stock Number:** 52430

| Code | Description | Qty |
|---|---|---|
| 0150FF | JOHN DEERE 35 P TIER EXCAVATOR GEN A | 1 |
| | **Standard Options - Per Unit** | |
| 0202 | DESTINATION CODE - US | 1 |
| 0259 | ENGLISH CUSTOMER DELIVERY OM | 1 |
| 0406 | CFG6 CAB RBR TRK LONG ARM | 1 |
| | **Dealer Attachments** | |
| 1001 | Freight | 1 |
| 1002 | PDI | 1 |
| 1003 | Delivery | 1 |
| BYT10967 | 24" (4 cu ft) HD Bucket W/ Lift Hooks | 1 |

## JOHN DEERE 35 P-Tier Compact Excavator (Long Arm)

**Equipment Notes:**
**Hours:** 0
**Stock Number:**

| Code | Description | Qty |
|---|---|---|
| 0150FF | JOHN DEERE 35 P TIER EXCAVATOR GEN A | 1 |
| | **Standard Options - Per Unit** | |
| 0202 | DESTINATION CODE - US | 1 |
| 0259 | ENGLISH CUSTOMER DELIVERY OM | 1 |
| 0406 | CFG6 CAB RBR TRK LONG ARM | 1 |
| | **Dealer Attachments** | |
| 1001 | Freight | 1 |
| 1002 | PDI | 1 |
| 1003 | Delivery | 1 |
| BYT10967 | 24" (4 cu ft) HD Bucket W/ Lift Hooks | 1 |

# STANDARD WARRANTY FOR NEW JOHN DEERE CONSTRUCTION, UTILITY, CCE AND FORESTRY PRODUCTS – US & Canada

- **Construction, Forestry & Compact Construction Equipment (CCE) Products*:** 12 months Full Machine Standard Warranty
- ***Compact Construction Equipment Products** Delivered and settled on or after 01 June 2018: 24 months or 2000 hours (whichever comes first) Full Machine Standard Warranty
- **C&E Series Pull-Type Scrapers:** 6 months Full Machine Standard Warranty
- **DC & DE Series Pull-Type Scrapers:** 12 months Full Machine Standard Warranty
- **Scraper Tractors:** 24 Months or 2000 Hours (whichever occurs first) Full Machine Standard Warranty
- **Forestry Attachments:** 12 Months or 2000 Hours (whichever occurs first) Full Machine Standard Warranty
- **Frontier Equipment:** 6 months Full Machine Standard Warranty (90 days in rental applications)

The "Standard Warranty" is part of the warranty protection package available from John Deere Construction & Forestry Company (John Deere Limited in Canada) ("John Deere") to purchasers of new John Deere products ("product"):

**STANDARD Warranty** is John Deere's standard new product warranty, described in this document, provided at no additional charge to the purchaser.

**EXTENDED Warranty** is a separate repair contract made available by John Deere for purchasers who wish to complement their Standard Warranty coverage. Complete Extended Warranty details, including coverage options and limitations, are set forth in the Application for Extended Warranty, which is available from authorized John Deere dealers.

**STRUCTURALL Warranty** applies to certain structural components as listed below and as described in this document.

**FACTORY-INSTALLED UNDERCARRIAGE Warranty** applies to certain undercarriage components as listed below and as described in this document.

## A. STANDARD WARRANTY - GENERAL PROVISIONS

John Deere will repair or replace, at its option, any parts (except those specified below) of a new John Deere product that, as delivered to the original retail purchaser(s), are defective in material or workmanship. Performance of this warranty will be free of charge for parts and labor/labour, except as otherwise stated below. Standard Warranty applies only to purchases from John Deere and authorized John Deere dealers and, except as otherwise provided in the next sentence and section L below, is extended only to the original retail purchaser of the product. Remaining Standard Warranty applicable to a used John Deere product is transferred to a subsequent purchaser of the product only if the subsequent purchaser requests a transfer from an authorized John Deere dealer before the product's Standard Warranty expires. Coverage begins on the date of delivery of the product to the original retail purchaser. For purposes of this warranty, a product that has been rented, used for demonstration purposes for 150 or more hours, or otherwise used prior to its original retail purchase has been "used" for the total duration of such use. Warranty statements required by law covering engine emissions-related parts and components are found on a separate written warranty certificate provided to the purchaser at the time of the original retail purchase.

## B. WHAT IS COVERED BY STANDARD WARRANTY -

All parts of a new John Deere product (except those noted in Sections D and E below) are covered during the Standard Warranty period set out above.

## C. EXCLUSIVE REMEDY -

The repair or replacement of covered parts or components that are defective, as provided in Sections A, B, D.2 and D.3 herein, shall be the purchaser's exclusive remedy for any defect in the product. However, if after repeated attempts such repair or replacement fails to correct the performance problem caused by the defect, the purchaser's sole remedy shall be a refund of the amount paid for the product (in exchange for a return of the product), excluding any transportation charges, license fees, taxes and insurance premiums, and less a reasonable allowance for use of the product prior to its return. In no event will the dealer, John Deere or any company affiliated with John Deere be liable for any incidental or consequential damages, including but not limited to loss of profits, rental of substitute equipment or other commercial loss. Correction of defects in the manner provided above shall constitute fulfillment of all liabilities of the Dealer, John Deere, or any company affiliated with John Deere to the purchaser or any other

person, whether based upon contract, tort, strict liability, or otherwise. This limitation does not apply to claims for personal injury.

**D. ITEMS COVERED SEPARATELY -**

1. Standard Warranty does not apply to batteries, radios, tires, cameras, or to Cummins, MTU or Detroit Diesel Engines installed in John Deere products, which are covered by separate written warranties.
2. Factory-Installed Undercarriage Warranty covers all non-rubberized factory-installed undercarriage wear components for 3 years or 4,000 hours from the date of delivery to the original retail purchaser, whichever occurs first (unless terminated earlier under Section F, below). For purposes of this warranty, a product that has been rented, used for demonstration purposes for 150 or more hours, or otherwise used prior to its original retail purchase has been "used" for the total duration of such use. In addition to the items listed in section E below, Factory-Installed Undercarriage Warranty does not cover: failures due to wear, machine application, maintenance practices, or improper machine configuration; removal and installation labor/labour; transportation or hauling costs; unapproved parts; non-wear items; and rubberized undercarriage components such as rubber tracks. Warranty claims will be pro-rated based upon wear of the failed component and whether track shoe width is approved by John Deere. Factory-Installed Undercarriage Warranty does not apply to Scraper Tractors.
3. StructurALL Warranty for new John Deere Products (except Compact Excavators & Loaders, Skid-Steer Loaders, Compact Track Loaders, Scraper Tractors, Pull-Type Scrapers, and Forestry Attachments, which are not eligible for StructurALL Warranty) begins at the date of delivery to the original retail purchaser and ends (unless terminated earlier under Section F, below) after three (3) years, or 10,000 hours (whichever occurs first). For purposes of this warranty, a product that has been rented, used for demonstration purposes for 150 or more hours, or otherwise used prior to its original retail purchase has been "used" for the total duration of such use. **StructurALL Warranty applies only to the following structural components listed below as installed on the product at the time of original manufacture.** If a particular component is not listed below it is not covered by StructurALL Warranty.

   Arm; Articulation Joint (incl. pins & bushings); Bin Frame; Boom; Carbody; C-Frame*; Circle Frame; Coupler (John Deere built ONLY); Dipperstick; Draft Frame; Engine Frame; Equipment Frame; Grapple Arch and Grapple Boom; Loader Arm; Loader Frame; Mainframe; Moldboard Lift Arm; NeverGrease™ Pin Joints [Includes steering pin and bushing joints (standard equipment), roller elements (roller bearings) in bucket to boom joints and sliding elements (bushing) for boom and linkage joints (optional equipment)]; Rollover Protection Structure (ROPS); Side Frame; Swing Frame; Track Frame; Undercarriage Frame; X-Frame; Z-bar loader linkage (including bell crank and bucket driver link); Specialty booms and arms marketed as "heavy duty" by John Deere.

   *Items Covered by StructurALL for Cut-to-Length Forestry Machines*: Front frame (welded assembly); Rear frame (welded assembly); Crane king post with basement; Middle joint frame; Cabin swing frame; Main Boom

   StructurALL Warranty does not apply to:
   1. Any product used primarily in extreme duty or severe duty applications such as but not limited to: demolition and wrecking, chemical plant (including fertilizer plants), salt mines, steel mill, land fill and transfer stations, scrap handling, scarifying and other applications that are similarly destructive or similarly heavy duty except specialty booms and arms as stated in Section D.3 above.
   2. C-Frames on H-Series & J-Series Crawlers equipped with root rakes or used in forestry applications unless equipped with an "extreme duty" reinforcement package.
   3. Cut-to-Length Forestry Heads and Slash Bundler Units.
   4. Crawlers equipped with optional side booms.
   5. Cut-to-Length Forestry, Excavator, and Log Loader swing bearings.
   6. Motor Graders equipped with front- or rear-mounted snow wings.

**E. ITEMS NOT COVERED -**

John Deere is NOT responsible for the following:

1. Freight
2. Adjustments to compensate for wear, for periodic maintenance or adjustments that result from normal wear and tear.
3. Damage caused by unapproved adjustments (electronic or mechanical) to machine or machine components outside of published specifications including but not limited to engine, hydraulic components and relief valves.
4. Program updates, calibrations, and pressure adjustments.
5. Diagnostic Time
6. Additional Labor/Labour Time - Above SPG/Labor/Labour Rate
7. Additional Cleaning - Above SPG/Labor/Labour Rate
8. Rental Fees
9. Depreciation or damage caused by normal wear or application, lack of reasonable and proper maintenance, failure to follow operating instructions, misuse, negligence, collision or other accidents.
10. Premiums charged for Overtime Labor/Labour
11. Transportation to and from the dealership.
12. Travel time, mileage or service calls by the dealer.
13. Non-John Deere components or modifications, Rotobec grapples, and attachments installed aftermarket.
14. Shop supplies and maintenance items such as, but not limited to: filters, fuels, oil, hydraulic fluid, lubricants, coolants, conditioners, shop towels, cleaners and degreasers. Note: Reimbursement for refills of oils/coolants lost due to a warrantable failure is covered when a system failure occurs outside the boundaries of a normal oil change (within 25% of specified change interval as provided in the Operator's Manual).
15. Torn, cut, or worn hoses.
16. Wear items, such as, but not limited to: body liner, belts, blades, bulbs, lubricated joints (including pins and bushings), dry brakes, brake linings, dry clutch linings, saw blades, chains, skidder grapple shocks, color marking nozzles, and articulation bumpers.
17. Items such as cutting-edge parts, delimbing knives, bucket teeth and rubber track are not warranted for depreciation or damage caused by normal wear, lack of proper maintenance, misuse, failure to follow operating instructions, the elements or accident.
18. Any defect in a non-covered component, or damage to or failure of a covered component caused by a defect in a non-covered component.
19. Secondary damage which occurs from continued operation of a product after recognition of the occurrence of a failure.
20. Parts supplied or modifications done by third party suppliers.
21. Topping off fluids when fluid levels fall in the range between low and full
22. Parts/Kits not ordered on machine and installed aftermarket. These parts will be covered by any applicable parts warranty.
23. Attachments installed aftermarket – i.e. Winch not installed at factory.
24. Custom options installed outside the factory – i.e. G.R. Manufacturing option packages.
25. Used Products (except as otherwise provided in section L below).

**F. TERMINATION OF WARRANTY-**

John Deere is relieved of its obligations under Standard Warranty, StructurALL Warranty, Factory-Installed Undercarriage Warranty and/or Extended Warranty if:

1. Service (other than normal maintenance and replacement of service items) is performed by someone other than an authorized John Deere dealer; or
2. The product is modified or altered in ways not approved by John Deere; or
3. Any unapproved or improperly sized attachment is installed on the product. Approval and attachment size shall be at John Deere's sole discretion. (Consult dealer prior to installing attachments or product modification).
4. The product is moved outside the US and/or Canada.

**G. PARTS REPLACED UNDER WARRANTY -**

Only new or remanufactured parts or components furnished or approved by John Deere, will be used if John Deere elects to repair the product. If any such part or component is defective in material or workmanship when installed in the product, John Deere will repair or replace, as it elects, such defective part or component, provided the defect is

reported to an authorized John Deere dealer within 90 days of installation or before expiration of the applicable Standard Warranty, Factory-Installed Undercarriage Warranty and/or StructurALL Warranty whichever is later.

**H. TELEMATICS**

*NOTICE: Products may be equipped with telematics hardware and software ("Telematics") that transmit data to John Deere/ Dealer. Purchaser may deactivate Telematics at www.jdlink.com.*

Notwithstanding Purchaser's right, title or interest in the Products, Purchaser agrees that John Deere and Dealer (their affiliates, successors and assigns), without further notice to Purchaser have the right to:

1. Access, use, collect and disclose any data generated by, collected by, or stored in, Products or any hardware or devices interfacing with Products ("Machine Data");
2. Access Machine Data directly through data reporting devices integrated within, or attached to, Products, including Telematics ("Data Reporting Systems"); and
3. Update the Data Reporting Systems software from time to time. Machine Data will only be used in accordance with John Deere's Machine Data Policy, located at www.JohnDeere.com/MachineDataPolicy.

**I. OBTAINING WARRANTY SERVICE -**

To obtain warranty service, the purchaser must request warranty service from a John Deere dealer authorized to sell the product to be serviced. When making such a request, the purchaser must present evidence of the product's delivery date, make the product available at the dealer's place of business, and inform the dealer in what way the purchaser believes the product to be defective. Standard Warranty, Factory-Installed Undercarriage Warranty and/or StructurALL Warranty repairs may be made in the field if the purchaser and servicing dealer so desire. However, John Deere will not be responsible for any charges (such as dealer travel time, mileage or extra labor/labour) that would not have been incurred had the product been repaired at the dealer's place of business.

**J. NO IMPLIED WARRANTY, CONDITIONS OR OTHER REPRESENTATION -**

Where permitted by law, neither John Deere nor any company affiliated with it makes any warranties, representations, conditions or promises, express or implied, as to the quality, performance, or freedom from defect of its products, other than those set forth in this document and **NO IMPLIED WARRANTY OF MERCHANTABILITY, CONDITIONS OR FITNESS IS MADE.**

**K. NO DEALER WARRANTY -**

The selling dealer makes no warranty of its own on any item covered by this warranty, and makes no warranty on other items unless the dealer delivers to the purchaser a separate written warranty certificate specifically warranting the item. **The dealer has no authority to make any representation or promise on behalf of John Deere, or to modify the terms or limitations of this warranty in any way.**

**L. USED JOHN DEERE PRODUCTS ONLY -**

John Deere will transfer remaining Standard Warranty, Factory-Installed Undercarriage Warranty and/or StructurALL Warranty to the purchaser of a used John Deere construction and/or forestry product that has been used for less than the full warranty period provided at the product's original retail purchase. This transfer is not effective until change of ownership is registered by a John Deere dealer. **ALL THE TERMS, INLCUDING LIMITATIONS AND EXCLUSIONS, OF THE JOHN DEERE STANDARD WARRANTY, FACTORY-INSTALLED UNDERCARRIAGE WARRANTY, AND/OR STRUCTURALL WARRANTY ORIGINALLY PROVIDED FOR THE PRODUCT REMAIN IN EFFECT AND APPLICABLE.**

**RATING SHEET – REQUEST FOR PROPOSALS (RFP)**
**COMPETITIVE PROCUREMENT FOR GENERAL SERVICES, SUPPLIES, AND/OR EQUIPMENT**

| | |
|---|---|
| Entity Name: | City of La Marque |
| IFB Title or Number: | 2024 Mini - Excavator |
| Source of Funds: | American Rescue Plan Act (ARPA) (list others) |
| Evaluator's Name: | Amanda Hobby |
| Name of Respondent: | Mustang Cat |
| Date of Rating: | November 4, 2024 |

Each evaluation committee member shall independently assess the content of each response using only the evaluation criteria and weights published in the solicitation and award points up to the maximum listed for each factor. Information necessary to assess the Respondent on these criteria may be gathered from past experience with the Respondent, from the Respondent's proposal response, and/or by contacting past/current clients (references) of the Respondent. Respondents proposing to offer specific services (if allowed in IFB) should be scored only on those services. Rate Respondent in the following areas:

**Pass/Fail Criteria**

| | Factor | Pass | Fail | Comments |
|---|---|---|---|---|
| 1. | Responsiveness of Proposal | ✓ | | |
| 2. | Financial Stability | ✓ | | |
| **Must pass all above areas to proceed. If a Fail is marked, stop here.** | | | | |

**Total Score (A + B + C)**

| | Factor | Maximum Points | Score | Comments |
|---|---|---|---|---|
| A. | **Understanding of Work, Experience, and Relevant Qualifications** – Experience in services similar in size and scope; total number and types of employees, skills, knowledge and abilities, company background history, number of years in providing similar services. | 20 | 15 | |
| B. | **Capacity to Perform and Delivery/Service Schedule** – Demonstrated capacity to provide goods or services within the prescribed delivery date and time. Provided references should be considered in this evaluation. | 20 | 20 | |
| C. | **Pricing** – Prices for all goods and/or services shall be all inclusive and valid for 90 days. | 60 | 60 | |
| | **TOTAL AVAILABLE POINTS** | **100** | 95 | |

## RATING SHEET – REQUEST FOR PROPOSALS (RFP)
## COMPETITIVE PROCUREMENT FOR GENERAL SERVICES, SUPPLIES, AND/OR EQUIPMENT

| | |
|---|---|
| Entity Name: | Mustang Cat |
| IFB Title or Number: | |
| Source of Funds: | American Rescue Plan Act (ARPA) (list others) |
| Evaluator's Name: | Christine Turner |
| Name of Respondent: | Stuart Newton |
| Date of Rating: | 11-4-2024 |

Each evaluation committee member shall independently assess the content of each response using only the evaluation criteria and weights published in the solicitation and award points up to the maximum listed for each factor. Information necessary to assess the Respondent on these criteria may be gathered from past experience with the Respondent, from the Respondent's proposal response, and/or by contacting past/current clients (references) of the Respondent. Respondents proposing to offer specific services (if allowed in IFB) should be scored only on those services. Rate Respondent in the following areas:

**Pass/Fail Criteria**

| | Factor | Pass | Fail | Comments |
|---|---|---|---|---|
| 1. | Responsiveness of Proposal | ✓ | | |
| 2. | Financial Stability | ✓ | | |
| **Must pass all above areas to proceed. If a Fail is marked, stop here.** | | | | |

**Total Score (A + B + C)**

| | Factor | Maximum Points | Score | Comments |
|---|---|---|---|---|
| A. | **Understanding of Work, Experience, and Relevant Qualifications** – Experience in services similar in size and scope; total number and types of employees, skills, knowledge and abilities, company background history, number of years in providing similar services. | 20 | 5 | |
| B. | **Capacity to Perform and Delivery/Service Schedule** – Demonstrated capacity to provide goods or services within the prescribed delivery date and time. Provided references should be considered in this evaluation. | 20 | 20 | |
| C. | **Pricing** – Prices for all goods and/or services shall be all inclusive and valid for 90 days. | 60 | 60 | |
| | **TOTAL AVAILABLE POINTS** | **100** | 85 | |

# City of La Marque

1111 Bayou Road
La Marque, Texas 77568

Mustang Cat

## REQUEST FOR PROPOSALS (RFP)
## COMPETITIVE PROCUREMENT FOR
## GENERAL SERVICES, SUPPLIES, AND/OR EQUIPMENT

This RFP is being supported

by federal award number [RCP-056096]

allocated to the

## City of La Marque

under the

## American Rescue Plan Act (ARPA)

## Coronavirus State and Local Fiscal Recovery Funds (SLFRF)

## by the U.S. Department of the Treasury

**Prepared By: Department of Public Works**

## Procurement Reference #2232

## American Rescue Plan Act (ARPA)
## Request for Proposals (RFP)

Date: October 1, 2024

Re: Request for Proposals (RFP) for two (2) 2024 Mini-Excavators funded with Coronavirus State and Local Fiscal Recovery Funds (SLFRF) Allocated Under the American Rescue Plan Act (ARPA)

Dear Vendor:

The City of La Marque, hereinafter called "Entity", has received an allocation of American Rescue Plan Act (ARPA) funds, and is issuing a Request for Proposals (RFP) for a general purchases and supplies contract. The item(s) are being solicited to assist the Entity in completing and implementing programs and/or projects funded with its allocation of ARPA funds.

The Sole Point of Contact for this solicitation may provide information regarding this RFP. Refer to the **Schedule of Events and Selection Summary** in Section 1 of this document for response details.

Respondent is responsible for ensuring that their RFP response is received in a timely manner and that it contains all elements of the RFP, including all required forms and any addendums issued. Respondent should complete the Solicitation Response Cover Sheet/Acknowledgement of Addenda/Submission Checklist contained in Attachment A and all other requirements identified in the RFP. RFP responses received after the deadline will not be opened and therefore not evaluated or considered for award, regardless of whether or not the delay was outside the control of the submitting provider. The City of La Marque reserves the right to negotiate with providers submitting timely responses in accordance with state and federal procurement requirements, to reject any and all bids, and to select multiple respondents if it deems it's in the best interest of the Entity and/or desires to do so.

The Entity is an Affirmative Action/Equal Opportunity Employer. Minority Business Enterprises, Small Business Enterprises, Women Business Enterprises, and Labor Surplus Area firms are encouraged to submit bids.

**CONTENTS** **PAGE**


**AMERICAN RESCUE PLAN ACT (ARPA) REQUEST FOR PROPOSALS (RFP)** **2**

**REQUEST FOR PROPOSALS – GENERAL INFORMATION** **4**

**SECTION 1 – SCHEDULE OF EVENTS AND SELECTION SUMMARY** **4**

**SECTION 2 – INTRODUCTION AND GENERAL CONDITIONS** **6**

**SECTION 3 – SCOPE OF WORK/TECHNICAL SPECIFICATIONS** **9**

**SECTION 4 – EVALUATION CRITERIA** **12**

**SECTION 5 – RESPONSE SUBMISSION REQUIREMENTS** **14**

**LIST OF EXHIBITS** **16**

EXHIBIT A: PROJECT SCOPE OF WORK 17

EXHIBIT B: REQUIRED CONTRACT PROVISIONS 18

EXHIBIT C: OTHER RELEVANT INFORMATION/SPECIAL CONDITIONS 31

**LIST OF ATTACHMENTS A THROUGH L** **32**

ATTACHMENT A: SOLICITATION RESPONSE COVER SHEET/ACKNOWLEDGEMENT OF ADDENDA/SUBMISSION CHECKLIST 33

ATTACHMENT B: PRICING SHEET 35

ATTACHMENT C: SYSTEM FOR AWARD MANAGEMENT (SAM.GOV) RECORD SEARCH 36

ATTACHMENT D: CUSTOMER/CLIENT REFERENCES 38

ATTACHMENT E: CERTIFICATE OF INSURANCE (IF APPLICABLE) 41

ATTACHMENT F: ETHICS AND CONFLICT OF INTEREST ACKNOWLEDGEMENT 42

ATTACHMENT G: STATEMENT OF CONFLICTS OF INTEREST (IF ANY) 43

ATTACHMENT H: CONFLICT OF INTEREST QUESTIONNAIRE FORM (CIQ) 44

ATTACHMENT I: DISCLOSURE OF LOBBYING ACTIVITIES SF-LLL CERTIFICATION 46

ATTACHMENT J: TEC CERTIFICATE OF INTERESTED PARTIES (FORM 1295) 48

ATTACHMENT K: BIDDER'S CERTIFICATION 49

ATTACHMENT L: NON-COLLUSION AFFIDAVIT 50

**APPENDIX I – SAMPLE CONTRACT** **51**

## SECTION 1 – SCHEDULE OF EVENTS AND SELECTION SUMMARY

1.1 **SCHEDULE OF EVENTS – ALL DATES ARE TENTATIVE**

1.1.1 The Entity reserves the right to change dates at any time. At the sole discretion of the Entity, events listed in Section 1 are subject to scheduling changes and cancellation. The Entity will make public any changes to the stated schedule.

1.1.2 All requests, questions, or other communication about this solicitation shall be made in writing and addressed to the Entity's Sole Point of Contact listed in the **Schedule of Events + Response Requirements** that follow. Only the Sole Point of Contact may be contacted regarding required elements for this RFP.

1.1.3 **Respondent must review all documents and information in the *Exhibits* section and complete the required documents in the *Attachments* section. The completed Attachments, including the signed Pricing Sheet, must be contained within the Proposal Response and submitted to the Point of Contact listed in the Schedule of Events + Response Requirements that follow.**

### SCHEDULE OF EVENTS + RESPONSE REQUIREMENTS

| SCHEDULE OF EVENTS | |
|---|---|
| **RFP NOTICE DATE:** | October 1, 2024 |
| **VENDOR QUESTIONS DUE:** | October 15, 2024, 5:00 PM CST |
| **QUESTIONS ANSWERED BY:** | October 22, 2024, 5:00 PM CST |
| **PRE-PROPOSAL CONFERENCE:**<br><br>The Entity shall reject responses submitted by firms that do not attend the mandatory pre-proposal conference. | None |
| **SITE VISIT:**<br><br>The Entity shall reject responses submitted by firms that do not attend the mandatory site visit. | If needed, will be scheduled. |
| **PROPOSAL DUE DATE:** | October 31, 2024, 10:00 AM CST |
| | |
| **ESTIMATED AWARD DATE:** | November 18, 2024, 6:00 PM CST |
| **RESPONSE REQUIREMENTS** | |

| QUESTIONS & ANSWERS ONLY – SOLE POINT OF CONTACT | |
|---|---|
| The Entity will allow written questions and requests for clarification of this solicitation. Questions must be submitted by email to the Sole Point of Contact listed below. Respondents' names will be removed from questions in any responses released. | |
| **SOLE POINT OF CONTACT NAME:** | City Clerk |
| **ADDRESS:** | 1111 Bayou Road La Marque, TX 77568 |
| **EMAIL:** | bids@cityoflamarque.org |
| **PHONE:** | 409-938-9259 |

| DELIVERY OF RESPONSE PROPOSAL – POINT OF CONTACT | |
|---|---|
| **For digital delivery,** the Subject Line should include Respondent's Name, RFP number, and time/due date of RFP and completed response and all attachments uploaded to the following point of contact: | |
| **NAME:** | - |
| **TITLE:** | City Clerk |
| **DELIVERY POINT:** | Bidsubmit.cityoflamarque.org |
| | |
| **If mailed or hand-delivered,** sealed proposals (an original and 3 copies) should be submitted on the original forms provided. Each response must be sealed and should be placed in a properly identified envelope with Respondent's Name, RFP number, and time/due date of RFP. | |
| **For mail or hand-delivery,** deliver response and all attachments to: | |
| **NAME:** | - |
| **TITLE:** | City Clerk |
| **ADDRESS:** | 1111 Bayou Road LaMarque, TX 77568 |

## 1.2 SELECTION OF RESPONDENT(S)

1.2.1 The Entity intends to select Respondent(s) that best meet the needs of the Entity and that provide the best overall value. The Entity reserves the right to award multiple contracts from the finalist pool of successful Respondent(s). Respondents will be rated and ranked according to the evaluation criteria set forth below. The Entity intends to enter into negotiations with the top-ranked Respondent (i.e., the most highly qualified) and attempt to negotiate a fair and reasonable price; if negotiations fail, the Entity shall formally end negotiations with that respondent and attempt to negotiate with the next most highly qualified provider. The Entity shall proceed in like manner until it has contracted with a sufficient number of providers to respond to the identified scope of work.

1.2.2 The Entity reserves the right to check references on any projects performed by the Respondent, whether provided by the Respondent or known by the Entity.

1.2.3 The Entity is not required to accept the lowest cost proposal.

1.2.4 The Entity may make such investigation as deemed necessary to determine the ability of the Respondent to perform the work, and the Respondent shall furnish to the Entity all such information by the date specified by the Entity.

1.2.5 The Entity may conduct such investigations as it deems necessary or appropriate to assist in the evaluation of any RFP response and to establish the responsibility, qualifications, and financial ability of the Respondent, their proposed subcontractors, and other persons or organizations submitted within a Respondent's response to do the work to the Entity's satisfaction within the prescribed time.

1.2.6 The Entity reserves the right to conduct interviews of short-listed Respondent(s) prior to making a final selection.

1.2.7 The Entity reserves the right to contact references as deemed necessary to complete its analysis.

**See SECTION 4 – EVALUATION CRITERIA, for additional information on how Respondents will be evaluated and selected.**

# SECTION 2 – INTRODUCTION AND GENERAL CONDITIONS

## 2.1 GENERAL DESCRIPTION OF THE SCOPE OF WORK (SOW) – SEE *SECTION 3* AND *EXHIBIT A* FOR SOW DETAILS

The Entity has received an allocation of American Rescue Plan Act (ARPA) funds and is issuing a Request for Proposals (RFP) for a general purchases and supplies contract. The item(s) are being solicited to assist the Entity in completing and implementing programs and/or projects funded with its allocation of ARPA funds.

This solicitation includes purchase of:

2.1.1 **General Description:** Examples: two (2) 2024 Mini-Excavators

2.1.2 The scope of work includes all labor, materials, goods and/or services necessary to provide the purchased items, including any installation specified in **Exhibit A**. The respondent shall submit a written copy of all warranty information prior to final acceptance by Entity.

2.1.3 **REFERENCED BRAND EXAMPLE:** Catalogs, brand names or manufacturer's references are descriptive only and indicate type and quality desired. Proposals on brands of like nature and quality will be considered. If proposing other than the referenced brands/model number, Respondent must show manufacturer, brand or trade name, product number and provide complete descriptive information of product offered and include with response. Failure to take exception to specifications or reference data will require Respondent to furnish specified brand names, numbers, etc.

## 2.2 CONSIDERATION OF AWARD

To be considered for award, Respondents must adhere to the requirements, when applicable to Vendors, as set forth in **Exhibit B**, the ARPA Required Provisions, and provide all other required information and documentation as set forth in this solicitation.

## 2.3 CONTRACT AWARD

The Entity may award a Firm Fixed Price Contract. A Respondent's proposal must be responsive to this solicitation and include all required documents as instructed in the solicitation and listed in the *Solicitation Response Cover Sheet/Acknowledgement of Addenda/Submission Checklist* **(Attachment A)**.

## 2.4 TERM OF PURCHASE CONTRACT

The Contract or Purchase Order shall be effective upon date of execution (signed by the Entity designee), shall contain terms and conditions for the purchase, including delivery date and delivery location, and shall expire upon delivery and final acceptance by the Entity. A sample contract is available for review at **Appendix I.**

## 2.5 BID ACCEPTANCE

2.5.1 Proposals must be <u>received</u>, time stamped or otherwise acknowledged before the specified hour and date. Late submittals <u>WILL NOT</u> be considered under any circumstances. The Entity will not be held responsible for any solicitation response that is mishandled prior to receipt by the Entity. The Entity will not be responsible for any technical issues that result in late delivery, inappropriately identified documents, or other submission error that may lead to disqualification (including substantive or administrative) or nonreceipt of the Respondent's response.

2.5.2 The Entity reserves the right to accept or reject any and all proposals, to accept any proposal deemed advantageous and to waive irregularity in the proposals. By submitting a response, the Respondent acknowledges and will adhere to all specifications as stated within this procurement packet.

2.5.3 Proposals CANNOT be altered or amended after the due date. Any alterations made before the due time must be initialed by Respondent or authorized agent. No response may be withdrawn after due date without approval and based on a written acceptable reason.

2.5.4 The Entity reserves the right to revise or amend the specifications prior to the due date. Such revisions or amendments, if any, will be announced by amendments or addendums to these specifications. Copies of such amendments or addendums so issued will be posted to the Entity's bidding websites. If Respondent demonstrates just reason for a change, the Entity must have at least five (5) working days' notice prior to submission due date.

2.5.5 In the event that Respondent finds discrepancies in or omissions from the specifications or other documents or be in doubt as to their meaning, Respondent should at once notify the Entity Sole Point of Contact and obtain clarification prior to submitting a response.

2.5.6 All Respondents must meet or exceed the minimum specifications to be considered a valid response. The Entity reserves the right to accept or reject all or any part of any response, waive minor technicalities and award the contract either to the lowest responsible Respondent or to the Respondent who provides goods or services at the best value for the Entity.

2.5.7 The Respondent agrees to protect the Entity from claims involving infringement of patents or copyrights.

PROPRIETARY OR CONFIDENTIAL INFORMATION; TEXAS PUBLIC INFORMATION ACT: Any proprietary, trade secret, or otherwise confidential information Respondent includes in its Proposal must be clearly labeled as proprietary or confidential information, and Respondent must identify the specific exception to disclosure in the Public Information Act (PIA). Merely making a blanket claim that the entire Proposal is protected from disclosure because it contains some proprietary information is not acceptable and shall make the entire Proposal subject to release under the PIA. Any information which is not clearly identified as proprietary or confidential shall be deemed to be subject to disclosure pursuant to the PIA.

Information, documentation, and other material in connection with this Response or any resulting Contract may be subject to public disclosure under the Texas PIA, Chapter 552 of the Texas Gov't Code.

2.5.8 There is no guarantee a contract will be awarded. The Entity reserves the right to cancel this RFP at any time.

2.5.9 All proposals become public documents and are subject to public review (upon request and as allowed by law). The submission of an RFP response will constitute representation by the Respondent that it understands and has complied with the requirements of the RFP. Submission of a response indicates the RFP information provided was sufficient in scope and detail to convey understanding of anticipated terms and conditions for performance of the work.

2.5.10 RFP Respondents assume all costs of preparation of the proposal. RFP responses become the property of the Entity.

**2.6 PROHIBITED COMMUNICATION**

On issuance of this solicitation, except for the written inquiries described in Section 2.6 above, the Entity, its representative(s), or partners will not answer any questions or otherwise discuss the contents of this solicitation with any potential respondent. This restriction does not preclude discussions between affected parties for the purposes of conducting business unrelated to this solicitation. Failure to comply with these requirements may result in disqualification of respondent's solicitation response.

**2.7 TERMINATION CONDITIONS**

See Contract at **Appendix I** for Termination Conditions.

2.7.1 **FAILURE TO ENTER INTO A CONTRACT**

Should the Selected Respondent ("Vendor"), to whom the contract is awarded, fail to enter into a contract within twenty-one (21) business days, the Entity may then, at its option, retain the Vendor's bid deposit/bond (if required) and accept the bid of the next lowest responsible bidder.

## SECTION 3 – SCOPE OF WORK/TECHNICAL SPECIFICATIONS

### 3.1 MINIMUM REQUIREMENTS

3.1.1 The selected Vendor shall have no convictions or civil judgments preceding nor thereafter this solicitation rendered against Respondent for 1) commission of fraud or a criminal offense in connection with obtaining, attempting to obtain, or performing a public (federal, state or local) transaction or contract under a public transaction; 2) violation of federal or state antitrust statutes or commission of embezzlement, theft, forgery, bribery, falsification or destruction of records, making false statements, or receiving stolen property.

3.1.2 The selected Vendor shall not ever have been indicted for or otherwise criminally or civilly charged by a government entity (federal, state, or local) with commission of any of the offenses enumerated above.

3.1.3 Where applicable, Vendor's staff must meet and maintain current certifications and or licensure requirements as mandated by state law or the appropriate licensing authority.

3.1.4 Vendor must not be debarred at the time of response submission, and prior to award of a contract. The System for Award Management (SAM.gov) and the Texas Comptroller's Debarred Vendor List will be checked to ensure the Vendor is not excluded from contract participation at the federal level. If the Vendor is debarred, the Vendor's proposal will not be evaluated.

### 3.2 SCOPE OF SERVICES Construct

3.2.1 **The required products or services shall be provided in accordance with attached Exhibits:**

- **Exhibit A:** Project Scope of Work
- **Exhibit B:** ARPA Required Provisions
- **Exhibit C:** Other Relevant Information

3.2.2 **Work Orders**

During the term of any contract awarded, the Entity may request the Vendor to perform certain tasks as described in the scope, subject to a specific work order authorization. All work authorizations shall be in writing, signed by all parties, and shall include a scope of services, a list of tasks to be performed, a time schedule, a list of deliverables and such other information or special conditions as may be necessary for the work requested.

3.2.3 **Condition of Product:** New Equipment ONLY; NO re-manufactured or "gray market" items. All items must be covered by the manufacturer's warranty. The unit(s) shall be made ready for continuous operation upon delivery. Respondent is cautioned that any unit delivered to the FOB point that does not meet specifications in every aspect will not be accepted.

3.2.4 **All Parts:** All parts not specifically mentioned which are necessary for the unit to be complete and ready for operation or which are normally furnished as standard equipment shall be furnished by the vendor. All parts shall conform in strength, quality, and workmanship to the accepted standards of the industry.

3.2.5 **Manuals:** Manuals containing illustrated parts list and operating and service instructions for the units shall be delivered with units. Manuals shall outline all necessary service and operating instructions for the units delivered and provide necessary warning and safety precautions.

3.2.6 **Warranty Requirements:** The units shall be warranted against defects in material and workmanship for a standard manufacturer's warranty and shall cover 100% parts and labor for the units. Vendor shall furnish warranty and a list of warrantied repair companies to the Entity at time of delivery. The warranty begins on the date the units are determined to meet specifications and accepted by the Entity.

**3.3 DELIVERY AND ACCEPTANCE**

3.3.1 **Freight Charges:** Shipping shall be Free on Board (FOB) destination; therefore, unit prices must include all shipping, handling, fuel surcharges, and delivery fees.

3.3.2 **Delivery Schedule:** Recommended delivery not to exceed 90 calendar days from date of award; delivery terms may be a factor in determining award. Respondent must contact the Entity point of contact to schedule delivery date and time. Respondent shall provide a minimum forty-eight (48) hours' notice prior to delivery.

**3.4 DELIVERY CONTACT(S):** Respondent shall contact the Entity for delivery a minimum of one (1) week in advance to coordinate delivery.

| | |
|---|---|
| **Delivery Contact Name:** | City Clerk |
| **Phone:** | (409) 938-9259 |
| **Email:** | bids@cityoflamarque.org |

**3.5 REGISTRATION AND TITLING (when applicable):** Permanent registration and titling will be performed by **the Entity. DO NOT REGISTER ITEM**. Respondent shall supply, as applicable, dealer's tag for item for sixty (60) days from date of delivery. The original Certificate of Origin (COO) or Manufacturer's Statement of Origin (MSO) as well as the most current version of TXDMV Form 130U or Application for Texas Title with signature shall be submitted with an invoice to the Entity.

**3.6 DELIVERY DELAYS:** If delay is foreseen, Respondent shall give written notice to the Entity and must keep the Entity advised of status of order at all times. Default in promised Delivery Days After Receipt of Order (ARO) without accepted reasons or failure to meet specifications authorizes the Entity to cancel contract/Purchase Order.

**3.7 COMPLIANT PRODUCTS:** Delivery does not occur until the Respondent delivers products, materials, or services in full compliance with the specifications to Entity's FOB destination, unless delivery is specifically accepted, in whole or in part, by the Entity. Providing products, materials, or services which do not meet all specification requirements does not constitute delivery. Entity reserves the right to require new delivery or a refund in the event that materials or products not meeting specifications are discovered after payment has been made. NO SUBSTITUTIONS PERMITTED WITHOUT WRITTEN APPROVAL OF THE ENTITY.

**3.8 ACCEPTANCE:** All equipment ordered will be subject to acceptance inspection and performance testing upon receipt. Acceptance inspection and performance testing will not take more than five (5) working days, weather permitting. Respondent will be notified within this time frame of any units not

delivered in full compliance with the purchase order specifications. In the event the goods tested fail to meet or exceed all conditions and requirements of the solicitation and Contract, the goods will be rejected in whole or in part, at the State's Entity's option, and returned to the Vendor or held for disposition at the Vendor's expense. Latent defects may result in cancellation of the Contract at no expense to the Entity.

## 3.9 RECORD KEEPING

3.9.1 Respondents shall provide, enter, or upload all documentation, communications, and records including all permits, certifications, warranties, and approvals regarding all provided services/ products as instructed by the Entity.

3.9.2 Respondents shall maintain records of all events that affect, or may be expected to affect the quality, scope, or progress of the services. All records shall be retained for a period of **five (5) years** following the closeout of the Entity's federal grant.

3.9.3 **Insurance**

3.9.3.1 If applicable, an original, certified copy of an Insurance Certificate listing the Entity as additional insured, must be submitted with the Respondent's submittal **(see Attachment E for requirements).** The successful Respondent will be required to maintain at all times during performance of the Contract, the insurance detailed below.

3.9.3.2 Workers' Compensation Insurance

3.9.3.3 Employers' Liability Insurance

3.9.3.4 Comprehensive General Liability Insurance

3.9.3.5 Excess Liability Insurance, Comprehensive General Liability Insurance, Comprehensive Automobile Liability Insurance

## 3.10 TERMS AND CONDITIONS

3.10.1 **Indemnity Clause** – The Respondent agrees to indemnify and save harmless the Entity and its officers, agents, and employees from any and all claims, causes or action, and damages of every kind, for injury to or death of any person and damages, to property arising out of or in connection with the work done by Respondent under this contract, and including acts or omissions of the Entity or its officers, agents, or employees in connection with said contract.

3.10.2 **Equal Opportunity Employer** – The successful Respondent shall warrant and agree that he/she is an Equal Opportunity Employer. Should complaints of any form of discrimination, either in dispensation of the service, or within company hiring policies be substantiated, this contract may be terminated immediately.

3.10.3 **Assignment** – The successful Respondent may not assign, sell, or otherwise transfer this contract without prior written consent of the Entity.

3.10.4 **Compliance with Laws** – The Respondent agrees to comply with the requirements of Section 603 of the Act, regulations adopted by Treasury pursuant to Section 603(f) of the Act, and guidance issued by Treasury regarding the foregoing.

3.10.4.1 Additionally, all applicable local government codes for the State of Texas also apply to this contract. All equipment, supplies and work furnished under this contract shall comply with applicable laws, ordinances, and regulations. Respondent shall obtain and pay for such

permits and inspections as are required for the legal performance of this work, unless otherwise specified. Respondent shall comply with all federal and state laws and Entity's ordinances and codes applicable to the Respondent's operation under this contract. These specifications and the contract resulting here shall be fully governed by the laws of the State of Texas and shall be fully performable in Galveston County, Texas, where venue for any proceeding arising hereunder will lie.

3.10.5 **Silence of Specifications** – The apparent silence of specifications as to any detail, or the apparent omission from it or a detailed description concerning any point, shall be regarded as meaning that only the best commercial practice is to prevail and that only material and workmanship of the finest quality shall be used. All interpretations of specifications shall be made on the basis of this statement. The Respondent should request clarification from the Entity as specified in this document.

## SECTION 4 – EVALUATION CRITERIA

**4.1 RESPONSIVENESS OF QUALIFICATIONS SUBMISSION:** **Pass/Fail**

Qualifications submission shall be responsive to all material requirements that shall enable the evaluation committee to evaluate responses in accordance with the evaluation criteria to make a recommendation to Officials of the Entity.

**4.2 FINANCIAL STABILITY OF RESPONDENT:** **Pass/Fail**

Financial stability of the Respondent to successfully undertake the project and the ability to ensure performance over the duration of the contract.

**4.3 TECHNICAL REQUIREMENTS:** **100 Points Total**

Extent to which the provided service or products meets the needs of the Entity, including, but not limited to, the criteria in the evaluation matrix and in the submission requirements section and as expressed in this document.

**4.4 EVALUATION CRITERIA:**

**Solicitation responses shall be evaluated in accordance with Part 200 of the Uniform Administrative Requirements, Cost Principles, and Audit Requirements. The Entity will make the selection on the basis of demonstrated competence and qualifications; and to a Respondent that provides a fair and reasonable price.**

The Entity evaluates the responses, prepares a Bid Tabulation sheet, determines the award on the basis of fair and reasonable pricing considered to be the Best Value to the Entity.

Only responses submitted in compliance with the **Schedule of Events + Response Requirements** section and meeting qualifications will be considered. Failure to submit the required information may be cause for rejection of the bid response. The Entity reserves the right to waive informalities and minor irregularities in bids received.

**Initial Compliance Screening**

The Entity will perform an initial screening of all solicitation responses received. Unsigned solicitation responses, and solicitation responses that do not meet the minimum qualifications above and/or do not include all required forms and information may be subject to rejection without further evaluation.

**Additional Evaluation Criteria**

All solicitations will be evaluated based on Responsiveness and Price. Responsiveness means adhering to the Terms and Conditions and specifications of the supplies requested.

***Evaluation Process:*** *The Entity's Evaluator(s) completes an evaluation of the submitted proposal using the criteria described below.* ***The proposal submitted must be a firm-fixed price.***

**EVALUATION CRITERIA**

| EVALUATION CRITERIA | SCORE |
|---|---|
| Responsiveness of Proposal | Pass/Fail |
| Financial Stability | Pass/Fail |
| Understanding of Work; Experience and Qualifications | 20 |
| Capacity to Perform, Delivery/Service Schedule, and References | 20 |
| Pricing | 60 |
| **TOTAL SCORE** | **100** |

## SECTION 5 – RESPONSE SUBMISSION REQUIREMENTS

This section details the requirements for submitting all required information. Respondents are advised to see **Schedule of Events + Response Requirements** on Page 4 of this document, and to carefully review all the requirements and submit all documents and information as indicated in this RFP. Additional information may be requested for clarification. Incomplete responses may lead to a submission being deemed nonresponsive and will not be considered.

To ensure some degree of uniformity in the submission, please follow the outline listed below.

### 5.1 STATEMENT OF INTEREST

The statement of interest should be limited to a maximum of two (2) pages and must include a brief introduction of the company, a statement of the Respondent's understanding of the work to be performed and that the company meets and will comply with the requirements set forth in this document.

### 5.2 EXPERIENCE AND RELEVANT QUALIFICATIONS

Respondent shall demonstrate related professional qualifications, experience, and knowledge similar to this scope of work. Response should include information similar in scope and size to the scope of work in this RFP. Limit to four (4) pages. Minimum submission shall address the following:

5.2.1 **Experience** – Respondents shall provide a concise narrative description of their firm's experience in services similar in size and scope to the requested scope of services. Describe any work performed in or for the Entity. Respondents shall provide descriptions of at least three (3) projects of similar size and scope to this Program. Projects should include project location, duration and project description and scope of work the Respondent performed.

5.2.2 **Relevant Qualifications** – Respondents must provide a brief summary to include total number and types of employees, skills, knowledge and abilities, company background history, and number of years in providing similar services as outlined in this document.

### 5.3 CAPACITY TO PERFORM

Respondent should state its firm commitment to provide goods or services within the prescribed delivery date and time.

5.3.1 **Work Capacity:** Respondent shall provide information to demonstrate capacity to perform requested work. Respondents shall provide a detailed typical schedule to show sequence of key work activities and the number of days to complete each task.

5.3.4 If applicable, **Bonding Capacity:** Respondent(s) shall provide proof of bonding capacity in a statement addressed to the Entity from a certified bonding company authorized to do business in the State of Texas. The letter must clearly state the amount of Firm's bonding capacity to be reserved for the Entity's projects. Firm shall carry a minimum bonding capacity of the project value upon execution of the Contract. The bond(s) must be made payable to the Entity. In your response, please provide a statement regarding your ability to provide proof of bonding as directed in the Exhibits that follow.

**5.4 FINANCIAL STABILITY**

Respondent shall provide a statement that includes the following:

5.4.1 A full disclosure of any events, liabilities, or contingent liabilities that could affect Respondent's financial ability to perform this contract; and

5.4.2 Other financial information sufficient for the Entity, in its sole judgement, to determine if Respondent is financially solvent or adequately capitalized.

**5.5 LEGAL ACTIONS**

Provide a list of all pending litigation and include a brief description of the reason for legal action (if applicable).

**5.6 PRICING**

5.6.1 Respondents shall complete and submit the Pricing Sheet (see **Attachment B**).

5.6.2 Prices for all goods and/or services shall be all inclusive. Pricing offered shall be valid for ninety (90) days from response due date.

5.6.3 The City of La Marque is exempt from taxes. DO NOT INCLUDE TAX IN YOUR PRICING SUBMITTAL.

5.6.4 Estimated Quantities – Quantities indicated are estimated based upon the best available information. The Entity reserves the right to increase or decrease the quantities by any amount deemed necessary to meet its needs without any adjustments in the bid price.

# LIST OF EXHIBITS

EXHIBIT A PROJECT SCOPE OF WORK

EXHIBIT B REQUIRED CONTRACT PROVISIONS

EXHIBIT C OTHER RELEVANT INFORMATION/SPECIAL CONDITIONS

# EXHIBIT A – PROJECT SCOPE OF WORK

To be provided by the Entity

| Item | Description | Quantity | Unit of Measure |
|---|---|---|---|
| 1 | 2024 Mini Excavators | 2 | See Below |
| 2 | | | |
| 3 | | | |
| 4 | | | |
| 5 | **DELIVERY LOCATION: Provide the Delivery Location** | 1500 Municipal Drive, La Marque, Texas 77568 | |
| 6 | **DELIVERY SCHEDULE: Provide the number of calendar days required for delivery after receipt of the order** | 90 days | |

**Basic Specifications:**

- Net horsepower at 2400 rpm shall be at least 23.6 hp (17.6 kW) according to ISO 9249
- SAE rated gross horsepower at 2400 rpm shall be at least 24.7 hp (18.4 kW)
- The machine must be CR (Compact Radius) with no overhang over the side of the tracks in the standard configuration (without counterweight)
- Operating weight with the cab option shall be at least 7,982 lb.
- Lift capacity max configuration without bucket fitted, blade down, and long stick shall be no less than 2,965 lb. (1,345kg) at 6'6" (2.0 m) reach and 0 ft (0 m) height over the front and no less than 2,965 lb. (1,345kg) at 6'6" (2.0 m) reach and 0 ft (0 m) height over side
- Maximum digging depth with a long stick shall be at least 10'2"
- Maximum digging height with a long stick shall be at least 16'5"
- Maximum reach with a long stick shall be at least 18'0"
- Height to top of cab shall be 8'1"
- Ground clearance shall not be less than 12.2"
- Transport width shall be 5'10" with 11.8" tracks
- Maximum vertical wall shall be no less that 7'10" with a long stick

**Engine:**

- Engine shall be US EPA Tier 4 Final compliant
- Machine shall be water cooled, 4 stroke
- Engine shall have automatic engine idle that automatically lowers engine revolutions when machine is not in use to save fuel
- Machine shall have sealed electrical connectors
- Water separator in fuel line shall be factory installed standard equipment
- Machine shall have adjustable automatic engine shutdown
- Machine shall have automatic swing break

- Machine shall be equipped with battery disconnect standard

**Power/Transmission:**

- Travel speed shall be at least 1.6 mph (2.6 km/h) in low and 2.8 mph (4.5 km/h) in high
- Traction force shall be at least 6,969 lbf (31.0 kn) in low and 3,799 lbf (16.9 kn) in high
- Factory installed, standard auto two speed which provides better fuel efficiency since the machine will automatically go into higher power/torque only when the system senses that it is required while dozing, counter rotating, and uphill travel

**Hydraulic System:**

- Machine shall have one variable displacement piston pump with an output of 26 gal/m (100 L/m) at 2400 rpm, designated for travel, boom, stick and bucket
- Equipment operating pressure shall be at least 3,553 psi (245 bar)
- Travel operating pressure shall be at let 3,553 psi (245 bar)
- Operating swing pressure shall be at least 2,625 psi (181 bar)
- Primary auxiliary circuit shall have an output of at least 18 gal/min
- Secondary auxiliary circuit shall have an output of at least 7.0 gal/min
- All fittings shall be of the O Ring Face Seal type for superior sealing against leaks
- Factory installed combined function (one-way/two-way) auxiliary high pressure hydraulic circuit shall be standard
- Auxiliary hydraulic valve shall be standard with hydraulic quick disconnects on the stick
- Machine shall be equipped with continuous auxiliary flow from factory
- Continuous flow must be able to be activated with flow in either direction and at any flow rate

**Undercarriage:**

- Track length shall be a minimum of 7'3"
- Machine shall have 11.8" rubber belt track standard from factory
- Ground pressure with 11.8" rubber belt shall be no more than 5.2 psi
- Machine equipped with fixed undercarriage available from factory, undercarriage with shall have a maximum width of 70.1"
- Machine shall come standard with tie down points on track frame

**Cab:**

- Machine shall have canopy option available from factory
- Machine shall come standard with interior cab lights with sealed pressurized cab
- Machine mut have adjustable auxiliary flow control for better controllability of attachments
- Pump flow shall decrease (auto-idle) when controls are in neutral for reduced fuel consumption and sound
- The rear window shall be able to be removed for escape in case of emergency
- Lower front window shall be able to be removed and secured within cab
- The cab door will be a hinged door design that has a mechanism that will lock the door I the open position
- Travel alarm shall be standard
- Machine shall have heat with variable temperature settings with sealed and pressurized cab available from factory
- Machine shall have multi-function capability of boom swing and upper body swing for extra machine versatility in tight areas

- Boom swing and upper body swing shall be able to be operated at the same time to maximize machine versatility and productivity
- Cab air conditioner shall have a primary filter that can be removed for inspection without any tools
- Machine shall have a 3" wide retractable seat belt as standard
- A 12-volt, 5-amp power supply with a cigar lighter type outlet shall be available for use of cell phones and two-way radios
- Machine shall have adjustable armrest that can be adjusted without tools
- Machine shall come standard with removable washable floormat
- Machine shall come standard with warning horn

**Boom / Stick:**

- The ability to order the machine with standard 49.6" or long stick 61.4" option shall be available
- Machine shall come standard with a swing boom
- Digging force with a standard stick shall be at least 4,249 lbs.
- Digging force with a long stick shall be at least 3,799 lbs.
- Bucket digging force shall be at least 7,419 lbs.
- Bucket rotation angle shall be 180 degrees
- Machine shall come with thumb ready from factory
- Machine shall have one piece boom 94.5"
- Machine shall come standard with boom light

**Blade:**

- Blade width shall be at least 70.1"
- Blade height shall be at least 13.8"
- Blade dig depth shall be at least 21.1"
- Blade lift height shall be at least 15.2"
- Dozer blade float shall be standard to give easy and fast site cleanup and leveling
- Blade shall come standard with bolt on cutting edge

**Swing System:**

- Machine swing speed shall be at least 9.0 rpm
- Machine boom left swing shall be at least 75 degrees
- Machine boom right swing shall be at least 50 degrees
- Machine shall have a spring applied, hydraulic release automatic swing break
- Machine shall have automatic swing break

**Work Tool Options:**

- Machine attachments shall come standard with pin on linkage
- A quick coupler system shall be available
- The hydraulic quick coupler must be able to be controlled from inside the cab

**Serviceability:**

- All daily maintenance areas shall be situated where they can be easily reached from ground level
- Machine shall come standard with a battery disconnect switch
- Fuse box shall be able to open without tools
- Scheduled oil sampling port for the main hydraulic system shall be provided for hydraulic oil to simplify sampling
- Radial seal air filter with double layered filter core shall be provided for better filtration

- Hydraulic system pressure taps shall be included for quick, easy, efficient, system diagnostics
- The engine fan guard shall fully enclose (360°) the engine fan
- An electronic priming fuel pump shall be standard
- Machine shall come standard with fuel water separator
- 24 Month / 2000-hour Manufacture warranty shall be standard

**Minimum Service Fill Capacities:**

- Fuel tank capacity shall not be less than 11.9 gal (45.0 L)
- Cooling system shall not hold less than 1.05 gal (4.0 L)
- Engine oil shall not hold less than 1.45 gal (5.5 L)
- Each final drive shall have a capacity of 0.16 gal (0.6 L)
- Hydraulic system shall not hold less than 9.2 gal (35.0 L)

**Owning / Operating Costs:**

- Factory-fill extended-life coolant with a minimum life of 12,000 hours, rated to -35° F (-37° C), shall be standard.
- Engine oil and filter shall have a recommended change interval of 500 hours
- Hydraulic system oil shall have a recommended change interval of 3000 hours

**Additional Features:**

- Machine boom and stick lowering check valve shall be available from factory
- 1st and 2nd Auxiliary lines shall be available from factory
- Water jacket heater shall be available from factory
- Machine LED front lights shall be available from factory
- Machine LED front and rear lights shall be available from factory
- Machine LED boom light shall be available from factory
- Machine mirrors left and right shall be available from factory
- Cab guarding shall be available from factory
- A rotating beacon shall be available from factory
- Machine shall come standard with two-point lifting
- 24" digging bucket with lift hooks attached to the back of bucket

**This project is being supported, in whole or in part, by the U.S. Department of the Treasury, in utilizing the U.S. Department of the Treasury Coronavirus State and Local Fiscal Recovery Funds (ARPA) program and is subject to all applicable Federal and State laws and regulations.**

# EXHIBIT B – ARPA REQUIRED PROVISIONS

CFR 200.327 Contract provisions. The Non-Federal entity's contracts should contain applicable provisions described in Appendix II to Part 200—Contract Provisions for Non-Federal Entity Contracts Under Federal Awards. The Non-Federal entity's contracts must contain the provisions described in Appendix II to Part 200—Contract Provisions for Non-Federal Entity Contracts Under Federal Awards, as applicable.

| THRESHOLD | PROVISION | CITATION | PROVISION APPLIES TO |
|---|---|---|---|
| | **2 CFR 200 Appendix II (A-L)** | | |
| >$250,000 (Simplified Acquisition Threshold) | Contracts for more than the simplified acquisition threshold, which is the inflation adjusted amount determined by the Civilian Agency Acquisition Council and the Defense Acquisition Regulations Council (Councils) as authorized by 41 U.S.C. 1908, must address administrative, contractual, or legal remedies in instances where contractors violate or breach contract terms, and provide for such sanctions and penalties as appropriate. | 2 CFR 200 APPENDIX II (A) | Contractor RFP/IFB Contractor RFQ Subrecipients |
| >$10,000 | All contracts in excess of $10,000 must address termination for cause and for convenience by the Non-Federal entity including the manner by which it will be affected and the basis for settlement. | 2 CFR 200 APPENDIX II (B) | Contractor RFP/IFB Contractor RFQ Subrecipients |
| None | Equal Employment Opportunity. Except as otherwise provided under 41 CFR Part 60, all contracts that meet the definition of "federally assisted construction contract" in 41 CFR Part 60-1.3 must include the equal opportunity clause provided under 41 CFR 60-1.4(b), in accordance with Executive Order 11246, "Equal Employment Opportunity" (30 FR 12319, 12935, 3 CFR Part, 1964-1965 Comp., p. 339), as amended by Executive Order 11375, "Amending Executive Order 11246 Relating to Equal Employment Opportunity," and implementing regulations at 41 CFR part 60, "Office of Federal Contract Compliance Programs, Equal Employment Opportunity, Department of Labor."<br>41 CFR 60-1.4 Equal opportunity clause.<br>(b) Federally assisted construction contracts. (1) Except as otherwise provided, each administering agency shall require the inclusion of the following language as a condition of any grant, contract, loan, insurance, or guarantee involving federally assisted construction which is not exempt from the requirements of the equal opportunity clause:<br>The [recipient] hereby agrees that it will incorporate or cause to be incorporated into any contract for construction work, or modification thereof, as defined in the regulations of the Secretary of Labor at 41 CFR Chapter 60, which is paid for in whole or in part with funds obtained from the Federal Government or borrowed on the credit of the Federal Government pursuant to a grant, contract, loan, insurance, or guarantee, or undertaken pursuant to any Federal program involving such grant, contract, loan, insurance, or guarantee, the following equal opportunity clause:<br>During the performance of this contract, the contractor agrees as follows:<br>(1) The contractor will not discriminate against any employee or applicant for employment because of race, color, religion, sex, sexual orientation, gender identity, or national origin. The contractor will take affirmative action to ensure that applicants are employed, and that employees are treated during employment without regard to their race, color, religion, sex, sexual orientation, gender identity, or national origin. Such action shall include, but not be limited to the following:<br>Employment, upgrading, demotion, or transfer; recruitment or recruitment advertising; layoff or termination; rates of pay or other forms of compensation; and selection for training, including apprenticeship. The contractor agrees to post in | 2 CFR 200 APPENDIX II (C) and 41 CFR §60-1.4(b) | Contractor RFP/IFB Contractor RFQ Subrecipients |

| THRESHOLD | PROVISION | CITATION | PROVISION APPLIES TO |
|---|---|---|---|
| | conspicuous places, available to employees and applicants for employment, notices to be provided setting forth the provisions of this nondiscrimination clause.<br>(2) The contractor will, in all solicitations or advertisements for employees placed by or on behalf of the contractor, state that all qualified applicants will receive consideration for employment without regard to race, color, religion, sex, sexual orientation, gender identity, or national origin.<br>(3) The contractor will not discharge or in any other manner discriminate against any employee or applicant for employment because such employee or applicant has inquired about, discussed, or disclosed the compensation of the employee or applicant or another employee or applicant. This provision shall not apply to instances in which an employee who has access to the compensation information of other employees or applicants as a part of such employee's essential job functions discloses the compensation of such other employees or applicants to individuals who do not otherwise have access to such information, unless such disclosure is in response to a formal complaint or charge, in furtherance of an investigation, proceeding, hearing, or action, including an investigation conducted by the employer, or is consistent with the contractor's legal duty to furnish information.<br>(4) The contractor will send to each labor union or representative of workers with which he has a collective bargaining agreement or other contract or understanding, a notice to be provided advising the said labor union or workers' representatives of the contractor's commitments under this section and shall post copies of the notice in conspicuous places available to employees and applicants for employment.<br>(5) The contractor will comply with all provisions of Executive Order 11246 of September 24, 1965, and of the rules, regulations, and relevant orders of the Secretary of Labor.<br>(6) The contractor will furnish all information and reports required by Executive Order 11246 of September 24, 1965, and by rules, regulations, and orders of the Secretary of Labor, or pursuant thereto, and will permit access to his books, records, and accounts by the administering agency and the Secretary of Labor for purposes of investigation to ascertain compliance with such rules, regulations, and orders.<br>(7) In the event of the contractor's noncompliance with the nondiscrimination clauses of this contract or with any of the said rules, regulations, or orders, this contract may be canceled, terminated, or suspended in whole or in part and the contractor may be declared ineligible for further Government contracts or federally assisted construction contracts in accordance with procedures authorized in Executive Order 11246 of September 24, 1965, and such other sanctions may be imposed and remedies invoked as provided in Executive Order 11246 of September 24, 1965, or by rule, regulation, or order of the Secretary of Labor, or as otherwise provided by law.<br>(8) The contractor will include the portion of the sentence immediately preceding paragraph (1) and the provisions of paragraphs (1) through (8) in every subcontract or purchase order unless exempted by rules, regulations, or orders of the Secretary of Labor issued pursuant to section 204 of Executive Order 11246 of September 24, 1965, so that such provisions will be binding upon each subcontractor or vendor. The contractor will take such action with respect to any subcontract or purchase order as the administering agency may direct as a means of enforcing such provisions, including sanctions for noncompliance:<br>Provided, however, that in the event a contractor becomes involved in, or is threatened with, litigation with a subcontractor or vendor as a result of such direction by the administering agency, the contractor may request the United States to enter into such litigation to protect the interests of the United States.<br>The [recipient] further agrees that it will be bound by the above equal opportunity clause with respect to its own employment practices when it participates in federally assisted construction work: Provided, that if the [recipient] so participating is a State or local government, the above equal opportunity clause is not applicable to any agency, instrumentality or subdivision of such government which does not participate in work on or under the contract. | | |

| THRESHOLD | PROVISION | CITATION | PROVISION APPLIES TO |
|---|---|---|---|
| | The [recipient] agrees that it will assist and cooperate actively with the administering agency and the Secretary of Labor in obtaining the compliance of contractors and subcontractors with the equal opportunity clause and the rules, regulations, and relevant orders of the Secretary of Labor, that it will furnish the administering agency and the Secretary of Labor such information as they may require for the supervision of such compliance, and that it will otherwise assist the recipient agency in the discharge of the agency's primary responsibility for securing compliance.<br><br>The recipient further agrees that it will refrain from entering into any contract or contract modification subject to Executive Order 11246 of September 24, 1965, with a contractor debarred from, or who has not demonstrated eligibility for, Government contracts and federally assisted construction contracts pursuant to the Executive Order and will carry out such sanctions and penalties for violation of the equal opportunity clause as may be imposed upon contractors and subcontractors by the administering agency or the Secretary of Labor pursuant to Part II, Subpart D of the Executive Order. In addition, the [recipient] agrees that if it fails or refuses to comply with these undertakings, the administering agency may take any or all of the following actions: cancel, terminate, or suspend in whole or in part this grant (contract, loan, insurance, guarantee); refrain from extending any further assistance to the [recipient] under the program with respect to which the failure or refund occurred until satisfactory assurance of future compliance has been received from such [recipient]; and refer the case to the Department of Justice for appropriate legal proceedings. | | |
| >$10,000,000 for ARPA but State Provision Applies at any amount and/or<br><br>>$2,000 for CDBG/Braided Funds Projects<br><br>See TX Prevailing Wage Laws | Davis-Bacon Act, as amended (40 U.S.C. 3141-3148). When required by Federal program legislation, all prime construction contracts in excess of $10,000,00 awarded by Non-Federal entities must include a provision for compliance with the Davis-Bacon Act (40 U.S.C. 3141-3144, and 3146-3148) as supplemented by Department of Labor regulations (29 CFR Part 5, "Labor Standards Provisions Applicable to Contracts Covering Federally Financed and Assisted Construction"). In accordance with the statute, contractors must be required to pay wages to laborers and mechanics at a rate not less than the prevailing wages specified in a wage determination made by the Secretary of Labor. In addition, contractors must be required to pay wages not less than once a week. The Non-Federal entity must place a copy of the current prevailing wage determination issued by the Department of Labor in each solicitation. The decision to award a contract or subcontract must be conditioned upon the acceptance of the wage determination. The Non-Federal entity must report all suspected or reported violations to the Federal awarding agency.<br><br>The contracts must also include a provision for compliance with the Copeland "Anti-Kickback" Act (40 U.S.C. 3145), as supplemented by Department of Labor regulations (29 CFR Part 3, "Contractors and Subcontractors on Public Building or Public Work Financed in Whole or in Part by Loans or Grants from the United States"). The Act provides that each contractor or subrecipient must be prohibited from inducing, by any means, any person employed in the construction, completion, or repair of public work, to give up any part of the compensation to which he or she is otherwise entitled. The Non-Federal entity must report all suspected or reported violations to the Federal awarding agency. | 2 CFR 200 APPENDIX II (D) | Contractor RFP/IFB<br><br>Subrecipients |
| >$100,000 | Contract Work Hours and Safety Standards Act (40 U.S.C. 3701-3708). Where applicable, all contracts awarded by the Non-Federal entity in excess of $100,000 that involve the employment of mechanics or laborers must include a provision for compliance with 40 U.S.C. 3702 and 3704, as supplemented by Department of Labor regulations (29 CFR Part 5). Under 40 U.S.C. 3702 of the Act, each contractor must be required to compute the wages of every mechanic and laborer on the basis of a standard work week of 40 hours. Work in excess of the standard work week is permissible provided that the worker is compensated at a rate of not less than one and a half times the basic rate of pay for all hours worked in excess of 40 hours in the work week. The requirements of 40 U.S.C. 3704 are applicable to construction work and provide that no laborer or mechanic must be required to work in surroundings | 2 CFR 200 APPENDIX II (E) | Contractor RFP/IFB<br><br>Subrecipients |

| THRESHOLD | PROVISION | CITATION | PROVISION APPLIES TO |
|---|---|---|---|
| | or under working conditions which are unsanitary, hazardous, or dangerous. These requirements do not apply to the purchases of supplies or materials or articles ordinarily available on the open market, or contracts for transportation or transmission of intelligence. | | |
| None | Rights to Inventions Made Under a Contract or Agreement. If the Federal award meets the definition of "funding agreement" under 37 CFR § 401.2 (a) and the recipient or subrecipient wishes to enter into a contract with a small business firm or nonprofit organization regarding the substitution of parties, assignment or performance of experimental, developmental, or research work under that "funding agreement," the recipient or subrecipient must comply with the requirements of 37 CFR Part 401, "Rights to Inventions Made by Nonprofit Organizations and Small Business Firms Under Government Grants, Contracts and Cooperative Agreements," and any implementing regulations issued by the awarding agency. | 2 CFR 200 APPENDIX II (F) | Contractor RFP/IFB Contractor RFQ Subrecipients |
| >$150,000 | Clean Air Act (42 U.S.C. 7401-7671q.) and the Federal Water Pollution Control Act (33 U.S.C. 1251-1387), as amended – Contracts and subgrants of amounts in excess of $150,000 must contain a provision that requires the Non-Federal award to agree to comply with all applicable standards, orders or regulations issued pursuant to the Clean Air Act (42 U.S.C. 7401-7671q) and the Federal Water Pollution Control Act as amended (33 U.S.C. 1251-1387). Violations must be reported to the Federal awarding agency and the Regional Office of the Environmental Protection Agency (EPA). | 2 CFR 200 APPENDIX II (G) | Contractor RFP/IFB Contractor RFQ Subrecipients |
| >$25,000 | Debarment and Suspension (Executive Orders 12549 and 12689) – A contract award (see 2 CFR 180.220) must not be made to parties listed on the governmentwide exclusions in the System for Award Management (SAM), in accordance with the OMB guidelines at 2 CFR 180 that implement Executive Orders 12549 (3 CFR part 1986 Comp., p. 189) and 12689 (3 CFR part 1989 Comp., p. 235), "Debarment and Suspension." SAM Exclusions contains the names of parties debarred, suspended, or otherwise excluded by agencies, as well as parties declared ineligible under statutory or regulatory authority other than Executive Order 12549. | 2 CFR 200 APPENDIX II (H) | Contractor RFP/IFB Contractor RFQ Subrecipients Vendors |
| >$100,000 | Byrd Anti-Lobbying Amendment (31 U.S.C. 1352) – Contractors that apply or bid for an award exceeding $100,000 must file the required certification. Each tier certifies to the tier above that it will not and has not used Federal appropriated funds to pay any person or organization for influencing or attempting to influence an officer or employee of any agency, a member of Congress, officer or employee of Congress, or an employee of a member of Congress in connection with obtaining any Federal contract, grant or any other award covered by 31 U.S.C. 1352. Each tier must also disclose any lobbying with Non-Federal funds that takes place in connection with obtaining any Federal award. Such disclosures are forwarded from tier to tier up to the Non-Federal award. | 2 CFR 200 APPENDIX II (I) and 24 CFR §570.303 | Contractor RFP/IFB Contractor RFQ Subrecipients |

| THRESHOLD | PROVISION | CITATION | PROVISION APPLIES TO |
|---|---|---|---|
| | See 2 CFR §200.323 - Procurement of Recovered Materials.<br><br>Where applicable, in the performance of contract, pursuant to 2 CFR 200.323, the contractor must comply with section 6002 of the Solid Waste Disposal Act, as amended by the Resource Conservation and Recovery Act. The requirements of Section 6002 include procuring only items designated in guidelines of the Environmental Protection Agency (EPA) at 40 CFR part 247 that contain the highest percentage of recovered materials practicable, consistent with maintaining a satisfactory level of competition, where the purchase price of the item exceeds $10,000 or the value of the quantity acquired during the preceding fiscal year exceeded $10,000; procuring solid waste management services in a manner that maximizes energy and resource recovery; and establishing an affirmative procurement program for procurement of recovered materials identified in the EPA guidelines.<br><br>To the extent that the scope of work or specifications in the contract requires the contractor to provide recovered materials the scope of work or specifications are modified to require that as follows.<br><br>i. In the performance of this contract, the Contractor shall make maximum use of products containing recovered materials that are EPA-designated items unless the product cannot be acquired—<br>1. Competitively within a timeframe providing for compliance with the contract performance schedule;<br>2. Meeting contract performance requirements; or<br>3. At a reasonable price.<br>ii. Information about this requirement, along with the list of EPA-designated items, is available at EPA's Comprehensive Procurement Guidelines web site, https://www.epa.gov/smm/comprehensive-procurement-guideline-cpg-program.<br>iii. The Contractor also agrees to comply with all other applicable requirements of Section 6002 of the "Solid Waste Disposal Act." | 2 CFR 200<br>APPENDIX II (J) | Contractor RFP/IFB<br>Contractor RFQ<br>Subrecipients |
| | See 2 CFR §200.216 - Prohibition on certain telecommunications and video surveillance services or equipment<br><br>(a) Recipients and subrecipients are prohibited from obligating or expending loan or grant funds to:<br>(1) Procure or obtain;<br>(2) Extend or renew a contract to procure or obtain; or<br>(3) Enter into a contract (or extend or renew a contract) to procure or obtain equipment, services, or systems that uses covered telecommunications equipment or services as a substantial or essential component of any system, or as critical technology as part of any system. As described in Public Law 115-232, section 889, covered telecommunications equipment is telecommunications equipment produced by Huawei Technologies Company or ZTE Corporation (or any subsidiary or affiliate of such entities).<br>(i) For the purpose of public safety, security of government facilities, physical security surveillance of critical infrastructure, and other national security purposes, video surveillance and telecommunications equipment produced by Hytera Communications Corporation, Hangzhou Hikvision Digital Technology Company, or Dahua Technology Company (or any subsidiary or affiliate of such entities).<br>(ii) Telecommunications or video surveillance services provided by such entities or using such equipment.<br>(iii) Telecommunications or video surveillance equipment or services produced or provided by an entity that the Secretary of Defense, in consultation with the Director of the National Intelligence or the Director of the Federal Bureau of Investigation, reasonably believes to be an entity | 2 CFR 200<br>APPENDIX II (K) | Contractor RFP/IFB<br>Contractor RFQ<br>Subrecipients |

| THRESHOLD | PROVISION | CITATION | PROVISION APPLIES TO |
|---|---|---|---|
| | owned or controlled by, or otherwise connected to, the government of a covered foreign country.<br>(b) In implementing the prohibition under Public Law 115-232, section 889, subsection (f), paragraph (1), heads of executive agencies administering loan, grant, or subsidy programs shall prioritize available funding and technical support to assist affected businesses, institutions and organizations as is reasonably necessary for those affected entities to transition from covered communications equipment and services, to procure replacement equipment and services, and to ensure that communications service to users and customers is sustained.<br>(c) See Public Law 115-232, section 889 for additional information.<br>(d) See also § 200.471. | | |
| | See 2 CFR §200.322 - Domestic Preferences for Procurements.<br><br>(a) As appropriate and to the extent consistent with law, the Non-Federal entity should, to the greatest extent practicable under a Federal award, provide a preference for the purchase, acquisition, or use of goods, products, or materials produced in the United States (including but not limited to iron, aluminum, steel, cement, and other manufactured products). The requirements of this section must be included in all subawards including all contracts and purchase orders for work or products under this award.<br><br>(b) For purposes of this section:<br>(1) "Produced in the United States" means, for iron and steel products, that all manufacturing processes, from the initial melting stage through the application of coatings, occurred in the United States.<br>(2) "Manufactured products" means items and construction materials composed in whole or in part of non-ferrous metals such as aluminum; plastics and polymer-based products such as polyvinyl chloride pipe; aggregates such as concrete; glass, including optical fiber; and lumber. | 2 CFR 200 APPENDIX II (L) | Contractor RFP/IFB<br>Contractor RFQ<br>Subrecipients |
| | **Additional 2 CFR 200 references & Other Regulations** | | |
| None | The Federal awarding agency must establish conflict of interest policies for Federal awards. The Non-Federal entity must disclose in writing any potential conflict of interest to the Federal awarding agency or pass-through entity in accordance with applicable Federal awarding agency policy. | 2 CFR 200.112 | Contractor RFP/IFB<br>Contractor RFQ<br>Subrecipients |
| None | Contracting with HUB, small and minority businesses, women's business enterprises, and labor surplus area firms.<br>(a) The Non-Federal entity must take all necessary affirmative steps to assure that minority businesses, women's business enterprises, and labor surplus area firms are used when possible.<br>(b) Affirmative steps must include:<br>(1) Placing qualified small and minority businesses and women's business enterprises on solicitation lists;<br>(2) Assuring that small and minority businesses, and women's business enterprises are solicited whenever they are potential sources;<br>(3) Dividing total requirements, when economically feasible, into smaller tasks or quantities to permit maximum participation by small and minority businesses, and women's business enterprises;<br>(4) Establishing delivery schedules, where the requirement permits, which encourage participation by small and minority businesses, and women's | 2 CFR 200.321 | Contractor RFP/IFB<br>Contractor RFQ<br>Subrecipients |

| THRESHOLD | PROVISION | CITATION | PROVISION APPLIES TO |
|---|---|---|---|
| | business enterprises;<br>(5) Using the services and assistance, as appropriate, of such organizations as the Small Business Administration and the Minority Business Development Agency of the Department of Commerce; and<br>(6) Requiring the prime contractor, if subcontracts are to be let, to take the affirmative steps listed in paragraphs (b)(1) through (5) of this section. | | |
| >$10,000 | An NFE (Non-Federal Entity) that is a state agency or an agency of a political subdivision of a state, and the NFE's contractors must comply with Section 6002 of the Solid Waste Disposal Act.<br>Applicable NFEs must include a contract provision requiring compliance with this requirement.<br>This includes contracts awarded by a state agency or political subdivision of a state and its contractors for certain items, as designated by the EPA, with a purchase price greater than $10,000.<br>Indian Tribal Governments and nonprofit organizations are not required to comply with this provision. Additional requirements are listed below. | 2 CFR 200.323 | Contractor RFP/IFB<br>Contractor RFQ<br>Subrecipients |
| None | Financial records, supporting documents, statistical records, and all other Non-Federal entity records pertinent to a Federal award must be retained for a period of three years from the date of submission of the final expenditure report or, for Federal awards that are renewed quarterly or annually, from the date of the submission of the quarterly or annual financial report, respectively, as reported to the Federal awarding agency or pass-through entity in the case of a subrecipient. Federal awarding agencies and pass-through entities must not impose any other record retention requirements upon Non-Federal entities. **All records related to ARPA shall be maintained for 5 years per the ARPA terms, conditions, and regulations.** The only exceptions are the following:<br>(a) If any litigation, claim, or audit is started before the expiration of the 3-year period, the records must be retained until all litigation, claims, or audit findings involving the records have been resolved and final action taken. **All records related to ARPA shall be maintained for 5 years per the ARPA terms, conditions, and regulations.**<br>(b) When the Non-Federal entity is notified in writing by the Federal awarding agency, cognizant agency for audit, oversight agency for audit, cognizant agency for indirect costs, or pass-through entity to extend the retention period.<br>(c) Records for real property and equipment acquired with Federal funds must be retained for 3 years after final disposition. All records related to ARPA shall be maintained for 5 years per the ARPA terms and conditions and regulations.<br>(d) When records are transferred to or maintained by the Federal awarding agency or pass-through entity, the 3-year retention requirement is not applicable to the Non-Federal entity All records related to ARPA shall be maintained for 5 years per the ARPA terms and conditions and regulations. **All records related to ARPA shall be maintained for 5 years per the ARPA terms, conditions, and regulations.**<br>(e) Records for program income transactions after the period of performance. In some cases, recipients must report program income after the period of performance. Where there is such a requirement, the retention period for the records pertaining to the earning of the program income starts from the end of the Non-Federal entity's fiscal year in which the program income is earned.<br>(f) Indirect cost rate proposals and cost allocations plans. This paragraph applies to the following types of documents and their supporting records: Indirect cost rate computations or proposals, cost allocation plans, and any similar accounting computations of the rate at which a particular group of costs is chargeable (such as computer usage chargeback rates or composite fringe benefit rates).<br>(1) *If submitted for negotiation.* If the proposal, plan, or other computation is | 2 CFR 200.334 | Contractor RFP/IFB<br>Contractor RFQ<br>Subrecipients<br>Vendors |

| THRESHOLD | PROVISION | CITATION | PROVISION APPLIES TO |
|---|---|---|---|
| | required to be submitted to the Federal Government (or to the pass-through entity) to form the basis for negotiation of the rate, then the 3-year retention period for its supporting records starts from the date of such submission. **All records related to ARPA shall be maintained for 5 years per the ARPA terms, conditions, and regulations.**<br>(2) *If not submitted for negotiation.* If the proposal, plan, or other computation is not required to be submitted to the Federal Government (or to the pass-through entity) for negotiation purposes, then the 3-year retention period for the proposal, plan, or computation and its supporting records starts from the end of the fiscal year (or other accounting period) covered by the proposal, plan, or other computation. **All records related to ARPA shall be maintained for 5 years per the ARPA terms, conditions, and regulations.** | | |
| None | The Federal awarding agency and the Non-Federal entity should, whenever practicable, collect, transmit, and store Federal award-related information in open and machine-readable formats rather than in closed formats or on paper in accordance with applicable legislative requirements. A machine-readable format is a format in a standard computer language (not English text) that can be read automatically by a web browser or computer system. The Federal awarding agency or pass-through entity must always provide or accept paper versions of Federal award-related information to and from the Non-Federal entity upon request. If paper copies are submitted, the Federal awarding agency or pass-through entity must not require more than an original and two copies. When original records are electronic and cannot be altered, there is no need to create and retain paper copies. When original records are paper, electronic versions may be substituted through the use of duplication or other forms of electronic media provided that they are subject to periodic quality control reviews, provide reasonable safeguards against alteration, and remain readable. | 2 CFR 200.336 | Contractor RFP/IFB<br>Contractor RFQ<br>Subrecipients |
| None | CONTRACTS WITH COMPANIES ENGAGED IN BUSINESS WITH IRAN, SUDAN, OR FOREIGN TERRORIST ORGANIZATION PROHIBITED. A governmental entity may not enter into a governmental contract with a company that is identified on a list prepared and maintained under Section 806.051, 807.051, or 2252.153. The term "foreign terrorist organization" in this paragraph has the meaning assigned to such a term in Section 2252.151(2) of the Texas Government Code. | Texas Government Code 2252.152 | Contractor RFP/IFB<br>Contractor RFQ<br>Subrecipients |
| >$100,000 | PROVISION REQUIRED IN CONTRACT.<br>(a) This section applies only to a contract that:<br>(1) is between a governmental entity and a company with 10 or more full-time employees; and<br>(2) has a value of $100,000 or more that is to be paid wholly or partly from public funds of the governmental entity.<br>(b) A governmental entity may not enter into a contract with a company for goods or services unless the contract contains a written verification from the company that it:<br>(1) does not boycott Israel; and<br>(2) will not boycott Israel during the term of the contract. | Texas Government Code 2271 | Contractor RFP/IFB<br>Contractor RFQ<br>Subrecipients<br>Vendors |
| For Critical Infrastructure Projects | PROHIBITION ON CONTRACTS WITH CERTAIN FOREIGN-OWNED COMPANIES IN CONNECTION WITH CRITICAL INFRASTRUCTURE.<br>PROHIBITED CONTRACTS.<br>(a) A governmental entity may not enter into a contract or other agreement relating to critical infrastructure in this state with a company:<br>(1) if, under the contract or other agreement, the company would be granted direct or remote access to or control of critical infrastructure in this state, excluding access specifically allowed by the governmental entity for product | Texas Government Code, Title 10, Subtitle F, Chapter 2274.0102 | Subrecipients<br>EC 6.1 Awardees |

| THRESHOLD | PROVISION | CITATION | PROVISION APPLIES TO |
|---|---|---|---|
| | warranty and support purposes; and<br>(2) if the governmental entity knows that the company is:<br>(A) owned by or the majority of stock or other ownership interest of the company is held or controlled by:<br>(i) individuals who are citizens of China, Iran, North Korea, Russia, or a designated country; or<br>(ii) a company or other entity, including a governmental entity, that is owned or controlled by citizens of or is directly controlled by the government of China, Iran, North Korea, Russia, or a designated country; or<br>(B) headquartered in China, Iran, North Korea, Russia, or a designated country.<br>(b) The prohibition described by Subsection (a) applies regardless of whether:<br>(1) the company's or its parent company's securities are publicly traded; or<br>(2) the company or its parent company is listed on a public stock exchange as:<br>(A) a Chinese, Iranian, North Korean, or Russian company; or<br>(B) a company of a designated country. | | |
| None | Mandatory standards and policies relating to energy efficiency which are contained in the state energy conservation plan issued in compliance with the Energy Policy and Conservation Act. | 42 U.S.C. 6201 | Contractor RFP/IFB<br>Subrecipients |
| None | The Firm agrees that no otherwise qualified individual with disabilities shall, solely by reason of his/her disability, be denied the benefits of, or be subjected to discrimination, including discrimination in employment, under any program or activity receiving federal financial assistance. | Section 504 of the Rehabilitation Act of 1973, as amended. | Subrecipients |
| | **ARPA Terms & Conditions** | | |
| ARPA Terms, Conditions, & Records | 1. Use of Funds.<br>a. Recipient understands and agrees that the funds disbursed under this award may only be used in compliance with section 603(c) of the Social Security Act (the Act), Treasury's regulations implementing that section, and guidance issued by Treasury regarding the foregoing.<br>b. Recipient will determine prior to engaging in any project using this assistance that it has the institutional, managerial, and financial capability to ensure proper planning, management, and completion of such project. | Section 9901 of the American Rescue Plan Act, Pub. L. No. 117-2;<br>Section 602(b), 603(b) and/or 603(c) as applicable | Subrecipients |
| ARPA Terms, Conditions, & Records | 2. Period of Performance. The period of performance for this award begins on the date hereof and ends on December 31, 2026. As set forth in Treasury's implementing regulations, Recipients may use award funds to cover eligible costs incurred during the period that begins on March 3, 2021, and ends on December 31, 2024. | Section 9901 of the American Rescue Plan Act, Pub. L. No. 117-2;<br>Section 602(b), 603(b) and/or 603(c) as applicable | Subrecipients |
| ARPA Terms, Conditions, & Records | 3. Reporting. Recipient agrees to comply with any reporting obligations established by Treasury as they relate to this award. | Section 9901 of the American Rescue Plan Act, Pub. L. No. 117-2;<br>Section 602(b), 603(b) and/or 603(c) as applicable | Subrecipients |

| THRESHOLD | PROVISION | CITATION | PROVISION APPLIES TO |
|---|---|---|---|
| ARPA Terms, Conditions, & Records | 4. Maintenance of and Access to Records<br>a. Recipient shall maintain records and financial documents sufficient to evidence compliance with section 603(c) of the Act, Treasury's regulations implementing that section, and guidance issued by Treasury regarding the foregoing.<br>b. The Treasury Office of Inspector General and the Government Accountability Office, or their authorized representatives, shall have the right of access to records (electronic and otherwise) of Recipient in order to conduct audits or other investigations.<br>c. Records shall be maintained by Recipient for a period of five (5) years after all funds have been expended or returned to Treasury, whichever is later. | Section 9901 of the American Rescue Plan Act, Pub. L. No. 117-2;<br>Section 602(b), 603(b) and/or 603(c) as applicable | Contractor RFP/IFB<br>Contractor RFQ<br>Subrecipients<br>Vendors |
| ARPA Terms, Conditions, & Records | 5. Pre-award Costs. Pre-award costs, as defined in 2 CFR § 200.458, may not be paid with funding from this award. | Section 9901 of the American Rescue Plan Act, Pub. L. No. 117-2;<br>Section 602(b), 603(b) and/or 603(c) as applicable | Subrecipients |
| ARPA Terms, Conditions, & Records | 6. Administrative Costs. Recipient may use funds provided under this award to cover both direct and indirect costs. | Section 9901 of the American Rescue Plan Act, Pub. L. No. 117-2;<br>Section 602(b), 603(b) and/or 603(c) as applicable | Subrecipients |
| ARPA Terms, Conditions, & Records | 7. Cost Sharing. Cost sharing or matching funds are not required to be provided by Recipient. | Section 9901 of the American Rescue Plan Act, Pub. L. No. 117-2;<br>Section 602(b), 603(b) and/or 603(c) as applicable | Subrecipients |
| ARPA Terms, Conditions, & Records | 8. Conflicts of Interest. Recipient understands and agrees it must maintain a conflict of interest policy consistent with 2 CFR § 200.318(c) and that such conflict of interest policy is applicable to each activity funded under this award. Recipient and subrecipients must disclose in writing to Treasury or the pass-through entity, as appropriate, any potential conflict of interest affecting the awarded funds in accordance with 2 CFR § 200.112. | Section 9901 of the American Rescue Plan Act, Pub. L. No. 117-2;<br>Section 602(b), 603(b) and/or 603(c) as applicable | Contractor RFP/IFB<br>Contractor RFQ<br>Subrecipients<br>Vendors |
| ARPA Terms, Conditions, & Records | 9. Compliance with Applicable Law and Regulations.<br>a. Recipient agrees to comply with the requirements of section 603 of the Act, regulations adopted by Treasury pursuant to section 603(f) of the Act, and guidance issued by Treasury regarding the foregoing. Recipient also agrees to comply with all other applicable federal statutes, regulations, and executive orders, and Recipient shall provide for such compliance by other parties in any agreements it enters into with other parties relating to this award.<br>b. Federal regulations applicable to this award include, without limitation, the following:<br>i. Uniform Administrative Requirements, Cost Principles, and Audit Requirements for Federal Awards, 2 CFR Part 200, other than such provisions as Treasury may determine are inapplicable to this Award and subject to such exceptions as may be otherwise provided by Treasury. Subpart F – Audit Requirements of the Uniform Guidance, implementing the Single Audit Act, shall apply to this award.<br>ii. Universal Identifier and System for Award Management (SAM), 2 CFR Part 25, pursuant to which the award term set forth in Appendix A to 2 CFR Part 25 is | Section 9901 of the American Rescue Plan Act, Pub. L. No. 117-2;<br>Section 602(b), 603(b) and/or 603(c) as applicable | Contractor RFP/IFB<br>Contractor RFQ<br>Subrecipients<br>Vendors |

| THRESHOLD | PROVISION | CITATION | PROVISION APPLIES TO |
|---|---|---|---|
| | hereby incorporated by reference.<br>iii. Reporting Subaward and Executive Compensation Information, 2 CFR Part 170, pursuant to which the award term set forth in Appendix A to 2 CFR Part 170 is hereby incorporated by reference.<br>iv. OMB Guidelines to Agencies on Governmentwide Debarment and Suspension (Non-procurement), 2 CFR Part 180, including the requirement to include a term or condition in all lower tier covered transactions (contracts and subcontracts described in 2 CFR Part 180, subpart B) that the award is subject to 2 CFR Part 180 and Treasury's implementing regulation at 31 CFR Part 19.<br>v. Recipient Integrity and Performance Matters, pursuant to which the award term set forth in 2 CFR Part 200, Appendix XII to Part 200 is hereby incorporated by reference.<br>vi. Governmentwide Requirements for Drug-Free Workplace, 31 CFR Part 20.<br>vii. New Restrictions on Lobbying, 31 CFR Part 21.<br>viii. Uniform Relocation Assistance and Real Property Acquisitions Act of 1970 (42 U.S.C. §§ 4601-4655) and implementing regulations.<br>ix. Generally applicable federal environmental laws and regulations.<br>c. Statutes and regulations prohibiting discrimination applicable to this award include, without limitation, the following:<br>i. Title VI of the Civil Rights Act of 1964 (42 U.S.C. §§ 2000d et seq.) and Treasury's implementing regulations at 31 CFR Part 22, which prohibit discrimination on the basis of race, color, or national origin under programs or activities receiving federal financial assistance;<br>ii. The Fair Housing Act, Title VIII of the Civil Rights Act of 1968 (42 U.S.C. §§ 3601 et seq.), which prohibits discrimination in housing on the basis of race, color, religion, national origin, sex, familial status, or disability;<br>iii. Section 504 of the Rehabilitation Act of 1973, as amended (29 U.S.C. § 794), which prohibits discrimination on the basis of disability under any program or activity receiving federal financial assistance;<br>iv. The Age Discrimination Act of 1975, as amended (42 U.S.C. §§ 6101 et seq.), and Treasury's implementing regulations at 31 CFR Part 23, which prohibit discrimination on the basis of age in programs or activities receiving federal financial assistance; and<br>v. Title II of the Americans with Disabilities Act of 1990, as amended (42 U.S.C. §§ 12101 et seq.), which prohibits discrimination on the basis of disability under programs, activities, and services provided or made available by state and local governments or instrumentalities or agencies thereto. | | |
| ARPA Terms, Conditions, & Records | 10. Remedial Actions. In the event of Recipient's noncompliance with section 603 of the Act, other applicable laws, Treasury's implementing regulations, guidance, or any reporting or other program requirements, Treasury may impose additional conditions on the receipt of a subsequent tranche of future award funds, if any, or take other available remedies as set forth in 2 CFR § 200.339. In the case of a violation of section 603(c) of the Act regarding the use of funds, previous payments shall be subject to recoupment as provided in section 603(e) of the Act. | Section 9901 of the American Rescue Plan Act, Pub. L. No. 117-2;<br>Section 602(b), 603(b) and/or 603(c) as applicable | Subrecipients |
| ARPA Terms, Conditions, & Records | 11. Hatch Act. Recipient agrees to comply, as applicable, with requirements of the Hatch Act (5 U.S.C. §§ 1501-1508 and 7324-7328), which limit certain political activities of State or local government employees whose principal employment is in connection with an activity financed in whole or in part by this federal assistance. | Section 9901 of the American Rescue Plan Act, Pub. L. No. 117-2;<br>Section 602(b), 603(b) and/or 603(c) as applicable | Subrecipients |
| ARPA Terms, Conditions, & Records | 12. False Statements. Recipient understands that making false statements or claims in connection with this award is a violation of federal law and may result in criminal, civil, or administrative sanctions, including fines, imprisonment, civil damages and penalties, debarment from participating in federal awards or | Section 9901 of the American Rescue Plan Act, Pub. L. No. 117-2; | Contractor RFP/IFB<br>Contractor RFQ<br>Subrecipients<br>Vendors |

| THRESHOLD | PROVISION | CITATION | PROVISION APPLIES TO |
|---|---|---|---|
| | contracts, and/or any other remedy available by law. | Section 602(b), 603(b) and/or 603(c) as applicable | |
| ARPA Terms, Conditions, & Records | 13. Publications. Any publications produced with funds from this award must display the following language: "This project [is being] [was] supported, in whole or in part, by federal award number [enter project FAIN] awarded to [name of Recipient] by the U.S. Department of the Treasury." | Section 9901 of the American Rescue Plan Act, Pub. L. No. 117-2; Section 602(b), 603(b) and/or 603(c) as applicable | Subrecipients |
| ARPA Terms, Conditions, & Records | 14. Debts Owed the Federal Government.<br>a. Any funds paid to Recipient (1) in excess of the amount to which Recipient is finally determined to be authorized to retain under the terms of this award; (2) that are determined by the Treasury Office of Inspector General to have been misused; or (3) that are determined by Treasury to be subject to a repayment obligation pursuant to section 603(e) of the Act and have not been repaid by Recipient shall constitute a debt to the federal government.<br>b. Any debts determined to be owed the federal government must be paid promptly by Recipient. A debt is delinquent if it has not been paid by the date specified in Treasury's initial written demand for payment, unless other satisfactory arrangements have been made or if the Recipient knowingly or improperly retains funds that are a debt as defined in paragraph 14(a). Treasury will take any actions available to it to collect such a debt. | Section 9901 of the American Rescue Plan Act, Pub. L. No. 117-2; Section 602(b), 603(b) and/or 603(c) as applicable | Subrecipients |
| ARPA Terms, Conditions, & Records | 15. Disclaimer.<br>a. The United States expressly disclaims any and all responsibility or liability to Recipient or third persons for the actions of Recipient or third persons resulting in death, bodily injury, property damages, or any other losses resulting in any way from the performance of this award or any other losses resulting in any way from the performance of this award or any contract, or subcontract under this award.<br>b. The acceptance of this award by Recipient does not in any way establish an agency relationship between the United States and Recipient. | Section 9901 of the American Rescue Plan Act, Pub. L. No. 117-2; Section 602(b), 603(b) and/or 603(c) as applicable | Subrecipients |
| ARPA Terms, Conditions, & Records | 16. Protections for Whistleblowers.<br>a. In accordance with 41 U.S.C. § 4712, Recipient may not discharge, demote, or otherwise discriminate against an employee in reprisal for disclosing to any of the list of persons or entities provided below, information that the employee reasonably believes is evidence of gross mismanagement of a federal contract or grant, a gross waste of federal funds, an abuse of authority relating to a federal contract or grant, a substantial and specific danger to public health or safety, or a violation of law, rule, or regulation related to a federal contract (including the competition for or negotiation of a contract) or grant.<br>b. The list of persons and entities referenced in the paragraph above includes the following:<br>i. A member of Congress or a representative of a committee of Congress;<br>ii. An Inspector General;<br>iii. The Government Accountability Office;<br>iv. A Treasury employee responsible for contract or grant oversight or management;<br>v. An authorized official of the Department of Justice or other law enforcement agency;<br>vi. A court or grand jury; or<br>vii. A management official or other employee of Recipient, contractor, or subcontractor who has the responsibility to investigate, discover, or address misconduct. | Section 9901 of the American Rescue Plan Act, Pub. L. No. 117-2; Section 602(b), 603(b) and/or 603(c) as applicable | Contractor RFP/IFB<br>Contractor RFQ<br>Subrecipients<br>Vendors |

| THRESHOLD | PROVISION | CITATION | PROVISION APPLIES TO |
|---|---|---|---|
| | c. Recipient shall inform its employees in writing of the rights and remedies provided under this section, in the predominant native language of the workforce. | | |
| ARPA Terms, Conditions, & Records | 17. Increasing Seat Belt Use in the United States. Pursuant to Executive Order 13043, 62 FR 19217 (Apr. 18, 1997), Recipient should encourage its contractors to adopt and enforce on-the-job seat belt policies and programs for their employees when operating company-owned, rented or personally owned vehicles. | Section 9901 of the American Rescue Plan Act, Pub. L. No. 117-2; Section 602(b), 603(b) and/or 603(c) as applicable | Contractor RFP/IFB Contractor RFQ Subrecipients Vendors |
| ARPA Terms, Conditions, & Records | 18. Reducing Text Messaging While Driving. Pursuant to Executive Order 13513, 74 FR 51225 (Oct. 6, 2009), Recipient should encourage its employees, subrecipients, and contractors to adopt and enforce policies that ban text messaging while driving, and Recipient should establish workplace safety policies to decrease accidents caused by distracted drivers | Section 9901 of the American Rescue Plan Act, Pub. L. No. 117-2; Section 602(b), 603(b) and/or 603(c) as applicable | Contractor RFP/IFB Contractor RFQ Subrecipients Vendors |

# EXHIBIT C – OTHER RELEVANT INFORMATION/SPECIAL CONDITIONS

Attach any relevant specifications, e.g., municipal/state code specifications, etc., that will be applicable to this purchase.

# ATTACHMENTS

**THE FOLLOWING DOCUMENTS MUST BE COMPLETED AND INCLUDED IN THE RESPONSE PACKAGE:**

| | | |
|---|---|---|
| 1. | ATTACHMENT A | SIGNED SOLICITATION RESPONSE COVER SHEET/ACKNOWLEDGEMENT OF ADDENDA/SUBMISSION CHECKLIST |
| 2. | ATTACHMENT B | PRICING SHEET |
| 3. | ATTACHMENT C | SYSTEM FOR AWARD MANAGEMENT (SAM.GOV) RECORD SEARCH |
| 4. | ATTACHMENT D | CUSTOMER/CLIENT REFERENCES |
| 5. | ATTACHMENT E | CERTIFICATE OF INSURANCE (IF APPLICABLE) |
| 6. | ATTACHMENT F | ETHICS AND CONFLICT OF INTEREST ACKNOWLEDGEMENT |
| 7. | ATTACHMENT G | STATEMENT OF CONFLICT OF INTEREST (IF ANY) |
| 8. | ATTACHMENT H | CONFLICT OF INTEREST QUESTIONNAIRE (FORM CIQ) |
| 9. | ATTACHMENT I | DISCLOSURE OF LOBBYING ACTIVITIES SF-LLL CERTIFICATION |
| 10. | ATTACHMENT J | TEXAS ETHICS COMMISSION CERTIFICATE OF INTERESTED PARTIES (FORM 1295) |
| 11. | ATTACHMENT K | BIDDER'S CERTIFICATION |
| 12. | ATTACHMENT L | NON-COLLUSION AFFIDAVIT |

# ATTACHMENT A:

## SOLICITATION RESPONSE COVER SHEET/ACKNOWLEDGMENT OF ADDENDA/SUBMISSION CHECKLIST

| | |
|---|---|
| **Title of Solicitation:** | (2) 2024 Mini-Excavators |
| **Name of Respondent:** | Stuart Newton |
| **Company:** | Mustang Cat |
| **Mailing Address:** | 12800 Northwest Freeway |
| **City, State, Zip:** | Houston, TX 77040 |
| **Phone Number:** | 713-460-2000 |
| **Company Contact Email Address:** | snewton@mustangcat.com |
| **Texas Vendor ID Number:** | 12004216110 |
| **EIN/Federal Tax Identification Number:** | 20-0421611 |

**ACKNOWLEDGEMENT OF ADDENDA**

| ADDENDUM NO. | DATE ISSUED |
|---|---|
| | |
| | |
| | |
| | |

☒ Please check this box if no addenda were issued.

## ATTACHMENT A (CONTINUED)

### SOLICITATION RESPONSE COVER SHEET/ACKNOWLEDGMENT OF ADDENDA/ SUBMISSION CHECKLIST

This checklist is provided for the Respondent's use in assuring compliance with required documentation; however, it does not include all specification requirements and does not relieve the Respondent of the need to read and comply with the specifications. Your submittal of the documents attests to the fact that you have read and/or included the documents with your response.

**SUBMISSION CHECKLIST**

| CHECK FOR COMPLETION | DOCUMENTS REQUIRED FOR SUBMISSION |
|---|---|
| ☒ | A. Solicitation Response Cover Sheet/Acknowledgement of Addenda/Submission Checklist |
| ☒ | B. Pricing Sheet |
| ☒ | C. System for Award Management (SAM.gov) Record Search |
| ☒ | D. Customer/Client References |
| ☒ | E. Certificate of Insurance (if applicable) |
| ☒ | F. Ethics and Conflict of Interest Acknowledgement |
| ☒ | G. Statement of Conflicts of Interest (if any) |
| ☒ | H. Conflict of Interest Questionnaire (Form CIQ) |
| ☒ | Please check this box if the Respondent does not identify a conflict of interest and therefore, will not be submitting the Conflict of Interest Questionnaire Form CIQ. |
| ☒ | I. Disclosure of Lobbying Activities SF-LLL Certification (Required for all proposals exceeding $100,000) |
| ☒ | Please check this box if the proposal does not exceed $100,000. |
| N/A | J. Texas Ethics Commission Certificate of Interested Parties (Form 1295) (This is a sample and is only required to be completed by the Respondent selected for award.) |
| ☒ | K. Bidder's Certification |
| ☒ | L. Non-Collusion Affidavit |
| ☐ | |
| ☐ | |

The Respondent's authorized agent must sign this document to acknowledge having read this solicitation carefully and completely, including the list of addenda, and that the information submitted is true and correct.

| | |
|---|---|
| **AUTHORIZED AGENT NAME:** | Stuart Newton |
| **AUTHORIZED SIGNATURE:** | *Stuart Newton* |
| **TITLE OF AUTHORIZED AGENT:** | Government Sales Rep |
| **DATE OF SIGNATURE:** | 10/11/24 |

## ATTACHMENT B: PRICING SHEET

Respondent shall complete and submit the following pricing sheet with the proposal response package. The Entity reserves the right to make an award on the basis of best value in the interest of the Entity. ALL PRICING MUST BE FIRM FIXED PRICING.

| ITEM | DESCRIPTION | QUANTITY | UNIT OF MEASURE | UNIT PRICE | EXTENSION |
|---|---|---|---|---|---|
| 1 | Entity should enter the description and quantity of the services/products as contained in the Scope of Work in Exhibit A | 2 | Each | $62,633.44 | $125,266.88 |
| 2 | | | | $ | $ |
| 3 | | | | $ | $ |
| 4 | | | | $ | $ |
| 5 | | | | $ | $ |
| **TOTAL FIRM FIXED PRICE** | | | | | $ |
| 6 | **DELIVERY** – Number of calendar days for delivery after receipt of the order: | | | 90 calendar days | |

| | |
|---|---|
| Name of Firm: | Mustang Cat |
| RFP #: | 2232 |
| RFP Name: | (2) 2024 Mini-Excavators |

### AUTHORIZED AGENT – SIGNATURE AND CONTACT INFORMATION

The Respondent's authorized agent must sign this document to acknowledge they read this solicitation carefully and completely, and the information submitted is true and correct.

| | |
|---|---|
| **SIGNATURE OF AUTHORIZED AGENT:** | Stuart Newton |
| **PRINTED NAME OF AUTHORIZED AGENT:** | Stuart Newton |
| **TITLE OF AUTHORIZED AGENT:** | Government Sales Rep |
| **DATE OF SIGNATURE:** | 10/11/24 |

# ATTACHMENT C: SYSTEM FOR AWARD MANAGEMENT (SAM.GOV) RECORD SEARCH

This project is funded by Coronavirus State and Local Fiscal Recovery Funds which requires all contractors and vendors to be in good standing according to SAM.gov and the Texas State Comptroller's office.

**Verification of SAM.gov Status**

1. Respondent must not be suspended or debarred at the time of the proposal submittal. The proposal response package must include a completed Non-Debarment Certification Form located **on the next page** herein.
2. All Respondents must be pre-vetted for eligibility to perform the outlined ARPA funded scope of work. A printed screenshot from the SAM.gov website verifies whether the Vendor is excluded from contract participation at the federal level.

**Contract Award**

The ARPA Award Recipient must verify the SAM.gov status of the Respondent(s) selected for contract award prior to execution of the contract as stated in the Non-Debarment Certification Form. The final verification of the Respondent's SAM.gov status is completed prior to contract award, and in addition to the initial verification documentation provided with the proposal response submittal.

## NON-DEBARMENT CERTIFICATION FORM

| | | | |
|---|---|---|---|
| **COMPANY/ENTITY LEGAL NAME:** Mustang Cat | | | |
| **STREET ADDRESS:** 12800 Northwest Freeway | | | |
| **CITY:** Houston | **STATE:** TX | **ZIP:** 77040 | |
| **CONTACT NAME:** Stuart Newton | | | |
| **CONTACT EMAIL:** snewton@mustangcat.com | | **CONTACT PHONE:** 713-460-2000 | |
| ***UEI #** | | ****TIN #** | 20-0421611 |

*Subrecipients are required to have a Unique Entity Identifier (UEI) Number prior to an award. All entities must be pre-vetted for eligibility/ability to perform the outlined ARPA funded scope of work and a record (PDF of SAM.gov screenshot) of SAM debarment clearance must be obtained prior to entering into any final contracts. **Beneficiary Entities are required to have UEI and/or TIN.

**APPLICABLE REGULATIONS: As stated in the ARPA/SLFRF Terms & Conditions:** *"OMB Guidelines to Agencies on Governmentwide Debarment and Suspension (Nonprocurement), 2 CFR Part 180, including the requirement to include a term or condition in all lower tier covered transactions (contracts and subcontracts described in 2 CFR Part 180, subpart B) that the award is subject to 2 CFR Part 180 and Treasury's implementing regulation at 31 CFR Part 19."*

**Also, Federal Executive Order (E.O.) 12549:** "Debarment" requires that contractors, beneficiaries or subrecipient organizations and their principals – who are receiving awards, using federal funds, are not debarred, suspended, proposed for debarment, declared ineligible, or voluntarily excluded by any federal department or agency from doing business with the federal government. By signing this document, you certify that your organization and its principals are not debarred. Failure to comply or attempts to edit this language may disqualify you from receiving or retaining funds. Information on debarment is available at the following website: www.sam.gov

**Be advised that we may pursue available remedies per 2 CFR 180.360 as an ARPA recipient entity:** *"If a federal agency later determines that you failed to tell the [awarding agency] that you were excluded or disqualified at the time you entered into the covered transaction with that person/awarding agency, the agency may pursue any available remedies, including suspension and debarment."*

| [INITIAL] | CERTIFICATION & SIGNATURE |
|---|---|
| X | **We hereby certify that we are not excluded, disqualified, or debarred from receiving federally funded awards.** |
| | **We hereby confirm that if that status should change within the course of this agreement, we will provide notification immediately. Failure to do so may result in this agreement's termination and/or the repayment of funds.** |

*Your signature certifies that the information provided on this form is correct and that neither you nor your principal(s) is/are presently debarred, suspended, proposed for debarment, declared ineligible, or voluntarily excluded from participation in this transaction by any federal department or agency.*

**SIGNATURE** Stuart Newton

**PRINTED NAME & TITLE** Stuart Newton - Government Sales Rep **DATE** 10/11024

**FOR DEPARTMENT USE ONLY**

| | | |
|---|---|---|
| SAM Debarment/Certification Record of Clearance | Yes [ ] No [ ] | Note: |
| State of Texas Debarred Vendor List Cleared | Yes [ ] No [ ] | Note: |
| Verified By: | Yes [ ] No [ ] | Date: |

## ATTACHMENT D: CUSTOMER/CLIENT REFERENCES

Respondents shall use Attachment D to describe a minimum of three (3) and maximum of five (5) references for jobs, and corresponding references, completed within last five (5) years.

**Respondent's Name:** Mustang Cat

The references shall illustrate recent experience successfully completing work of a similar nature and scope as the work described in this RFP. This form may be modified as needed to comply with the requirement to document company information. ***Failure to return this attachment (or a reasonable facsimile) may result in the proposal being considered non-responsive. Failure to provide references may result in the proposal being considered non-responsive.***

**REFERENCE 1:**

| | |
|---|---|
| **Company Name:** | Galveston County Road & Bridge |
| **Company Address:** | 5115 Hwy 3<br>Dickinson, TX 77539 |
| **Contact Name/Title/Phone:** | Lee Crowder/Road Administrator/281-534-4152 |
| **Contact Email:** | lee.crowder@co.galveston.tx.us |
| **Contract Award Date:** | 1/8/24 |
| **Contract Completion Date:** | 8/8/24 |
| **Contract Project Name:** | 415 IL |
| **Brief Description of Services:** | Caterpillar Box Blade Industrial Loader |

**REFERENCE 2:**

| | |
|---|---|
| **Company Name:** | Fort Bend County Drainage District |
| **Company Address:** | 1022 Blume Road<br>Rosenberg, TX 77471 |
| **Contact Name/Title/Phone:** | Marc Gadway/Fleet Manager/281-342-0141 |
| **Contact Email:** | marc.gadway@fortbendcountytx.gov |
| **Contract Award Date:** | 4/19/24 |
| **Contract Completion Date:** | 6/13/24 |
| **Contract Project Name:** | 330 |
| **Brief Description of Services:** | Caterpillar 330 Excavator |

**REFERENCE 3:**

| | |
|---|---|
| **Company Name:** | City of Houston |
| **Company Address:** | 611 Walker<br>Houston, TX 77002 |
| **Contact Name/Title/Phone:** | Philip Hibbler/Procurement Specialist/832-395-3208 |
| **Contact Email:** | Philip.hibbler@houstontx.gov |
| **Contract Award Date:** | 6/25/24 |
| **Contract Completion Date:** | 8/14/24 |
| **Contract Project Name:** | (7) 304's |
| **Brief Description of Services:** | (7) Caterpillar 304 Mini Excavator's |

**REFERENCE 4:**

| | |
|---|---|
| **Company Name:** | |
| **Company Address:** | |
| **Contact Name/Title/Phone:** | |
| **Contact Email:** | |
| **Contract Award Date:** | |
| **Contract Completion Date:** | |
| **Contract Project Name:** | |
| **Brief Description of Services:** | |

**REFERENCE 5:**

| | |
|---|---|
| **Company Name:** | |
| **Company Address:** | |
| **Contact Name/Title/Phone:** | |
| **Contact Email:** | |
| **Contract Award Date:** | |
| **Contract Completion Date:** | |
| **Contract Project Name:** | |
| **Brief Description of Services:** | |

# ATTACHMENT E: CERTIFICATE OF INSURANCE
## (PROPOSAL RESPONDER SUPPLIES INSURANCE WITH THE PROPOSAL PACKAGE)

**INSURANCE REQUIREMENTS**

If requested, the Respondent shall supply an original, certified copy of an insurance certificate listing **the Entity** as additional insured. The successful Respondent will be required to maintain, at all times during performance of the contract, the insurance detailed below. Failure to provide this insurance certificate within the specified amount of time may result in disqualification of bid.

a. Workers' Compensation Insurance as required by laws and regulations applicable to and covering employees of Contract engaged in the performance of the work under this agreement with a limit of not less than $1,000,000.00.

b. Employers' Liability Insurance protecting Responder against common law liability, in the absence of statutory liability, for employee bodily injury arising out of the master-servant relationship with a limit of not less than $1,000,000.00.

c. Comprehensive General Liability Insurance including products/completed operation with limits of liability of not less than: Bodily Injury $1,000,000.00 per each person, $2,000,000.00 per each occurrence/ aggregate; Property Damage $1,000,000.00 per each occurrence.

d. Excess Liability Insurance Comprehensive General Liability, Comprehensive Automobile Liability and coverages afforded by the policies above, with the minimum limits of $_____ excess of specified limits.

# ATTACHMENT F: ETHICS AND CONFLICT OF INTEREST ACKNOWLEDGEMENT

Public servants are expected to conduct themselves impartially and in a manner that inspires public confidence, while ensuring that responsible contractors have fair and equal access to governmental procurement.

The City of La Marque, Galveston County is committed to protection of government integrity, while also facilitating the recruitment and retention of the skilled personnel necessary to support its operations. To achieve this objective, The City of La Marque, Galveston County has established standards of ethical conduct and conflict of interest policies and expects all vendors, contractors, and subrecipients to adhere to the same core principles as described below.

To achieve these standards, it is essential that those doing business with the City of La Marque, Galveston County also observe the ethical standards prescribed here.

I acknowledge that it is a breach of ethics to attempt to influence any public employee, elected official, or department head to violate the standards of ethical conduct set forth in this code.

I further acknowledge that it is a breach of ethics for any employee of City of La Marque, Galveston County or a vendor doing business with the City of La Marque, Galveston County to participate directly or indirectly in a procurement when the employee or vendor knows that:

A. The employee or any member of the employee's immediate family or household has a substantial financial interest in a company responding to a City of La Marque, Galveston County procurement.

B. A business or organization in which the employee or any member of the employee's immediate family has a financial interest pertaining to the procurement.

I understand that it is a breach of ethics to offer, give, or agree to give any employee of City of La Marque, Galveston County, or for any employee to solicit, demand, accept, or agree to accept from a vendor, a gratuity of consequence or any offer of employment in connection with any decision, approval, disapproval, recommendation, preparation, or any part of a program requirement or purchase request influencing the content of specification or procurement standard, rendering of advice, investigation, auditing, or in any other advisory capacity in any proceeding or controversy, any particular matter pertaining to any program requirement, contract or subcontract, or to any solicitation or proposal therefore pending before City of La Marque, Galveston County.

I acknowledge that it is a breach of ethics for any payment, gratuity, or offer of employment to be made by or on behalf of a subcontractor under a contract to the prime contractor or higher tier subcontractor for any contract for City of La Marque, Galveston County as an inducement for the award of a contract or order.

I certify that I have read and understand the ethical standards set forth by City of La Marque, Galveston County and agree to comply with them in all business dealings with the City of La Marque, Galveston County.

| | |
|---|---|
| *Stuart Newton* | Mustang Cat |
| SIGNATURE, VENDOR AUTHORIZED REPRESENTATIVE | COMPANY |
| Stuart Newton - Government Sales Rep | 10/11/24 |
| PRINTED NAME, TITLE | DATE |

## ATTACHMENT G: STATEMENT OF CONFLICTS OF INTEREST (IF ANY)

The Respondent vendor must describe any conflicts of interest regarding the goods and or services associated with this solicitation.

**The Respondent shall complete and submit Form CIQ (Attachment I) if the service provider or key employees have conflicts regarding these services.**

The conflict of interest statement is required if the service provider or key employees have conflicts regarding the services and a plan for mitigating the conflict(s).

**The Entity** may in its sole discretion determine whether a conflict disqualifies a firm, and/or whether a conflict mitigation plan is acceptable.

**If the Respondent does not identify a conflict, then they should enter no conflict identified on the Submission Checklist (Attachment A).**

## CONFLICT OF INTEREST QUESTIONNAIRE — FORM CIQ

For vendor doing business with local governmental entity

**This questionnaire reflects changes made to the law by H.B. 23, 84th Leg., Regular Session.**

This questionnaire is being filed in accordance with Chapter 176, Local Government Code, by a vendor who has a business relationship as defined by Section 176.001(1-a) with a local governmental entity and the vendor meets requirements under Section 176.006(a).

By law this questionnaire must be filed with the records administrator of the local governmental entity not later than the 7th business day after the date the vendor becomes aware of facts that require the statement to be filed. *See* Section 176.006(a-1), Local Government Code.

A vendor commits an offense if the vendor knowingly violates Section 176.006, Local Government Code. An offense under this section is a misdemeanor.

| OFFICE USE ONLY |
| --- |
| Date Received |

1 **Name of vendor who has a business relationship with local governmental entity.**

Mustang Cat

2 ☐ **Check this box if you are filing an update to a previously filed questionnaire.** (The law requires that you file an updated completed questionnaire with the appropriate filing authority not later than the 7th business day after the date on which you became aware that the originally filed questionnaire was incomplete or inaccurate.)

3 **Name of local government officer about whom the information is being disclosed.**

NA

Name of Officer

4 **Describe each employment or other business relationship with the local government officer, or a family member of the officer, as described by Section 176.003(a)(2)(A). Also describe any family relationship with the local government officer. Complete subparts A and B for each employment or business relationship described. Attach additional pages to this Form CIQ as necessary.**

A. Is the local government officer or a family member of the officer receiving or likely to receive taxable income, other than investment income, from the vendor?

☐ Yes ☒ No

B. Is the vendor receiving or likely to receive taxable income, other than investment income, from or at the direction of the local government officer or a family member of the officer AND the taxable income is not received from the local governmental entity?

☐ Yes ☒ No

5 **Describe each employment or business relationship that the vendor named in Section 1 maintains with a corporation or other business entity with respect to which the local government officer serves as an officer or director, or holds an ownership interest of one percent or more.**

NA

6 ☐ Check this box if the vendor has given the local government officer or a family member of the officer one or more gifts as described in Section 176.003(a)(2)(B), excluding gifts described in Section 176.003(a-1).

7 Stuart Newton

Signature of vendor doing business with the governmental entity

10/11/24

Date

Form provided by Texas Ethics Commission www.ethics.state.tx.us Revised 1/1/2021

## CONFLICT OF INTEREST QUESTIONNAIRE
## For vendor doing business with local governmental entity

A complete copy of Chapter 176 of the Local Government Code may be found at http://www.statutes.legis.state.tx.us/Docs/LG/htm/LG.176.htm. For easy reference, below are some of the sections cited on this form.

**Local Government Code § 176.001(1-a):** "Business relationship" means a connection between two or more parties based on commercial activity of one of the parties. The term does not include a connection based on:

(A) a transaction that is subject to rate or fee regulation by a federal, state, or local governmental entity or an agency of a federal, state, or local governmental entity;

(B) a transaction conducted at a price and subject to terms available to the public; or

(C) a purchase or lease of goods or services from a person that is chartered by a state or federal agency and that is subject to regular examination by, and reporting to, that agency.

**Local Government Code § 176.003(a)(2)(A) and (B):**

(a) A local government officer shall file a conflicts disclosure statement with respect to a vendor if:

***

(2) the vendor:

(A) has an employment or other business relationship with the local government officer or a family member of the officer that results in the officer or family member receiving taxable income, other than investment income, that exceeds $2,500 during the 12-month period preceding the date that the officer becomes aware that

(i) a contract between the local governmental entity and vendor has been executed; or

(ii) the local governmental entity is considering entering into a contract with the vendor;

(B) has given to the local government officer or a family member of the officer one or more gifts that have an aggregate value of more than $100 in the 12-month period preceding the date the officer becomes aware that:

(i) a contract between the local governmental entity and vendor has been executed; or

(ii) the local governmental entity is considering entering into a contract with the vendor.

**Local Government Code § 176.006(a) and (a-1)**

(a) A vendor shall file a completed conflict of interest questionnaire if the vendor has a business relationship with a local governmental entity and:

(1) has an employment or other business relationship with a local government officer of that local governmental entity, or a family member of the officer, described by Section 176.003(a)(2)(A);

(2) has given a local government officer of that local governmental entity, or a family member of the officer, one or more gifts with the aggregate value specified by Section 176.003(a)(2)(B), excluding any gift described by Section 176.003(a-1); or

(3) has a family relationship with a local government officer of that local governmental entity.

(a-1) The completed conflict of interest questionnaire must be filed with the appropriate records administrator not later than the seventh business day after the later of:

(1) the date that the vendor:

(A) begins discussions or negotiations to enter into a contract with the local governmental entity; or

(B) submits to the local governmental entity an application, response to a request for proposals or bids, correspondence, or another writing related to a potential contract with the local governmental entity; or

(2) the date the vendor becomes aware:

(A) of an employment or other business relationship with a local government officer, or a family member of the officer, described by Subsection (a);

(B) that the vendor has given one or more gifts described by Subsection (a); or

(C) of a family relationship with a local government officer.

## ATTACHMENT I: DISCLOSURE OF LOBBYING ACTIVITIES
## SF-LLL CERTIFICATION REGARDING LOBBYING
***(TO BE SUBMITTED WITH EACH BID OR OFFER EXCEEDING $100,000)***

The undersigned certifies, to the best of his or her knowledge and belief, that:

(a) No Federal appropriated funds have been paid or will be paid, by or on behalf of the undersigned, to any person for influencing or attempting to influence an officer or employee of an agency, a Member of Congress, an officer or employee of Congress, or an employee of a Member of Congress in connection with the awarding of any Federal contract, the making of any Federal grant, the making of any Federal loan, the entering into of any cooperative agreement, and the extension, continuation, renewal, amendment, or modification of any Federal contract, grant, loan, or cooperative agreement.

(b) If any funds other than Federal appropriated funds have been paid or will be paid to any person for influencing or attempting to influence an officer or employee of any agency, a Member of Congress, an officer or employee of Congress, or an employee of a Member of Congress in connection with this Federal contract, grant, loan, or cooperative agreement, the undersigned shall complete and submit Standard Form-LLL, "Disclosure of Lobbying Activities," in accordance with its instructions.

(c) The undersigned shall require that the language in paragraphs (a) and (b) of this anti-lobbying certification be included in the award documents for all subawards at all tiers (including subcontracts, subgrants, and contracts under grants, loans, and cooperative agreements) and that all subrecipients shall certify and disclose accordingly.

This certification is a material representation of fact upon which reliance was placed when this transaction was made or entered into. Submission of this certification is a prerequisite for making or entering into this transaction imposed by 31, U.S.C. § 1352 (as amended by the Lobbying Disclosure Act of 1995).

The Contractor, Mustang Cat (insert business name), certifies or affirms the truthfulness and accuracy of each statement of its certification and disclosure, if any. In addition, the Contractor understands and agrees that the provisions of 31 U.S.C. § 3801 et seq., apply to this certification and disclosure, if any.

| | |
|---|---|
| **SIGNATURE** | *Stuart Newton* |
| **NAME OF AUTHORIZED AGENT** | Stuart Newton |
| **TITLE OF AUTHORIZED AGENT** | Government Sales Rep |
| **DATE** | 10/11/24 |

# DISCLOSURE OF LOBBYING ACTIVITIES – INSTRUCTIONS

Instructions, searching existing data sources, gathering, and maintaining the data needed, and completing and reviewing the collection of information. Send comments regarding the burden estimate or any other aspect of this collection of information, including suggestions for reducing this burden, to the Office of Management and Budget, Paperwork Reduction Project (0348-0046), Washington, DC 20503. Approved by OMB 0348-0046. Complete this form to disclose lobbying activities pursuant to 31 U.S.C. 1352

| 1.Type of Federal Action: | 2. Status of Federal Action: | 3. Report Type: |
|---|---|---|
| ☒ a. contract<br>☐ b. grant<br>☐ c. cooperative agreement<br>☐ d. loan<br>☐ e. loan guarantee<br>☐ f. loan insurance | ☒ a. bid/offer/application<br>☐ b. initial award<br>☐ c. post-award | ☒ a. initial filing<br>☐ b. material change |

| 4. Name and Address of Reporting Entity: | 5. If Reporting Entity in No. 4 is Subawardee, Enter Name and Address of Prime: |
|---|---|
| ☒ Prime ☐ Subawardee Tier _____, *if known:*<br>Name: Mustang Cat<br>Street Address: 12800 Northwest Freeway<br>City, State, Zip: Houston, TX, 77040<br>**Congressional District, if known:** 18th | Name:<br>Street Address:<br>City, State, Zip:<br>**Congressional District, if known:** |
| **6. Federal Department/Agency:**<br>U.S. Department of the Treasury | **7. Federal Program Name/Description:**<br>CFDA Number, *if applicable*: _____ |
| **8. Federal Action Number, *if known:*** | **9. Award Amount, *if known:***<br>$125,266.88 |
| **10a. Name and Address of Lobbying Registrant**<br>Name (First, MI, Last): Stuart, A, Newton<br>Street Address: 12800 Northwest Freeway<br>City, State, Zip: Houston, TX 77040 | **10b. Individuals Performing Services** *(including address if different from No. 10a)*<br>Name (First, MI, Last): Stuart, A, Newton<br>Street Address:<br>City, State, Zip: |

**11.** Information requested through this form is authorized by Title 31 U.S.C., Section 1352. This disclosure of lobbying activities is a material representation of fact upon which reliance was placed by the tier above when this transaction was made or entered into. This disclosure is required pursuant to 31 U.S.C. 1352. This information will be reported to the Congress semi-annually and will be available for public inspection. Any person who fails to file the required disclosure shall be subject to a civil penalty of not less than $10,000 and not more than $100,000 for each such failure.

**Signature:** Stuart Newton

**Name:** Stuart Newton **Title:** Government Sales Rep

**Telephone:** 713-460-2000 **Date:** 10/11/24

| Federal Use Only | Authorized for Local Reproduction<br>Standard Form – LLL (Rev. 7-97) |
|---|---|

# ATTACHMENT J:TEXAS ETHICS COMMISSION CERTIFICATE OF INTERESTED PARTIES (FORM 1295)

*(TO BE COMPLETED BY THE AWARDED VENDOR PRIOR TO CONTRACT EXECUTION)*

## CERTIFICATE OF INTERESTED PARTIES — FORM 1295

OFFICE USE ONLY

Complete Nos. 1 - 4 and 6 if there are interested parties.
Complete Nos. 1, 2, 3, 5, and 6 if there are no interested parties.

1 Name of business entity filing form, and the city, state and country of the business entity's place of business.

2 Name of governmental entity or state agency that is a party to the contract for which the form is being filed.

3 Provide the identification number used by the governmental entity or state agency to track or identify the contract, and provide a description of the services, goods, or other property to be provided under the contract.

| 4 Name of Interested Party | City, State, Country (place of business) | Nature of Interest (check applicable) | |
|---|---|---|---|
| | | Controlling | Intermediary |
| | | | |
| | | | |
| | | | |
| | | | |
| | | | |
| | | | |
| | | | |

5 Check only if there is NO Interested Party. ☐

6 UNSWORN DECLARATION

My name is _____, and my date of birth is _____.

My address is _____, _____, _____, _____, _____.
(street) (city) (state) (zip code) (country)

I declare under penalty of perjury that the foregoing is true and correct.

Executed in _____ County, State of _____, on the _____ day of _____, 20_____.
(month) (year)

_____
Signature of authorized agent of contracting business entity
(Declarant)

ADD ADDITIONAL PAGES AS NECESSARY

Form provided by Texas Ethics Commission www.ethics.state.tx.us Revised 12/22/2017

Must file online at www.ethics.state.tx.us/File

## ATTACHMENT K: BIDDER'S CERTIFICATION

In accordance with Texas Government Code Sections 2252.001 through 2252.004 (relating to bids by nonresident contractors), the pertinent portion of the Act has been extracted and is as follows:

1. "Nonresident bidder" refers to a person who is not a resident.
2. "Resident bidder" refers to a person whose principal place of business is in this state, including a contractor whose ultimate parent company or majority owner has its principal place of business in this state.

A governmental entity may not award a governmental contract to a nonresident bidder unless the nonresident underbids the lowest bid submitted by a responsible resident bidder by an amount that is not less than the greater of the following:

1. the amount by which a resident bidder would be required to underbid the nonresident bidder to obtain a comparable contract in the state in which the nonresident's principal place of business is located; or
2. the amount by which a resident bidder would be required to underbid the nonresident bidder to obtain a comparable contract in the state in which a majority of the manufacturing relating to the contract will be performed.

I certify that Mustang Cat (Company Name) is a

[X] **Resident bidder of Texas** as defined in Section 2252.001(4), Texas Government Code,

**OR**

[ ] **Nonresident bidder** as defined in Section 2252.001(3), Texas Government Code, and our principal place of business is located at _____ (City and State).

**Note: If the Respondent is an out-of-state company, a Certificate of Authority from the Secretary of State to do business in Texas must be provided.**

| | |
|---|---|
| **SIGNATURE** | Stuart Newton |
| **NAME OF AUTHORIZED AGENT** | Stuart Newton |
| **TITLE OF AUTHORIZED AGENT** | Government Sales Rep |
| **DATE** | 10/11/24 |

## ATTACHMENT L: NON-COLLUSION AFFIDAVIT

### NON-COLLUSION AFFIDAVIT

STATE OF TEXAS §
§
COUNTY OF Harris §

By the signature below, the signatory for the bidder certifies that neither he/she nor the firm, corporation, partnership or institution represented by the signatory or anyone acting for the firm bidding this project has violated the antitrust laws of this State, codified at Section 15.01, *et seq.*, Texas Business and Commerce Code, or the Federal antitrust laws, nor communicated directly or indirectly the bid made to any competitor or any other person engaged in the same line of business, nor has the signatory or anyone acting for the firm, corporation or institution submitting a bid committed any other act of collusion related to the development and submission of this bid proposal.

Signature: _____

Printed Name: Stuart Newton

Title: Government Sales Rep

Company: Mustang Cat

Date: 10/11/24

SUBSCRIBED and sworn to before me the undersigned authority by Stuart Newton on the 15th day of October, 2024 on behalf of said bidder.

NEVA KERR LESZCZYNSKI
Notary Public, State of Texas
Comm. Expires 10-16-2027
Notary ID 5838578

Neva Kerr Leszczynski
Notary Public in and for the
State of Texas

My commission expires: 10.16.27

# APPENDIX I – SAMPLE CONTRACT

## SAMPLE CONTRACT – INVITATION FOR BID NON-CONSTRUCTION ONLY
### CITY OF LA MARQUE
### AMERICAN RESCUE PLAN ACT (ARPA) PROGRAM
### GENERAL SERVICES, SUPPLIES, AND/OR EQUIPMENT CONTRACT

| | |
|---|---|
| **Vendor Name** | Vendor Name |
| **Vendor Unique Entity Identifier (UEI) if available** | XXXXXXXXXXXX |
| **Period of Performance Start Date** | |
| **Period of Performance End Date** | |
| **Amount of Federal Funds Obligated by this Agreement** | $000,000 |
| **Assisted Listing Number (ALN) #** 21.027 | **FAIN #** |

### INTRODUCTION

THIS CONTRACT for General Services, Supplies, and/or Equipment ("Contract") is made and entered into this [Date], by and between [City of La Marque], Texas, hereinafter referred to as the "Entity" and [Vendor Name], hereinafter referred to as the "Vendor." Entity and Vendor are sometimes each referred to as a "Party" and collectively "Parties."

The following recitals are incorporated in and made a part of this Contract.

WHEREAS, on March 11, 2021, President Biden signed the U.S. Senate-amended H.R. 1319 (P.L. 117-2) known as the American Rescue Plan Act (hereinafter "ARPA"); and

WHEREAS, under ARPA Section 603 (c)(1)(A) and (3) and the Final Rule 31 CFR 35.6, recipients may use Coronavirus State and Local Fiscal Recovery Funds ("SLFRF") to allocate funds for the provision of government services and/or make necessary investments in water, sewer, and broadband infrastructure; and

WHEREAS, the Entity has determined that it has the objective of providing services to its residents; and

WHEREAS, the Entity has been awarded ARPA funds by the U.S. Department of the Treasury ("Treasury") which have been distributed to the Entity from ARPA for covered costs and eligible expenses to be incurred during the period which began on March 3, 2021 (the date ARPA became law) until December 31, 2024 (to be fully expended by December 31, 2026); and

WHEREAS, the Entity desires to disburse funds to the Vendor to perform certain services or provide certain supplies or equipment in connection therewith as set forth in this Contract and in the Scope of Services attached hereto; and

WHEREAS, Vendor has represented to the Entity that it is duly qualified, eligible, and willing to provide the services identified herein and in the Scope of Services attached hereto.

NOW, THEREFORE, in consideration of the foregoing recitals and the terms and conditions set forth herein, the Parties hereto do mutually agree as follows:

## SECTION 1. CONTRACT ADMINISTRATION

### SECTION 1.1 CONTACT INFORMATION & NOTICES

For the purposes of this Contract, the Entity's Representative listed below will serve as the primary point of contact for the Vendor. All required reports and communication shall be directed to this liaison and other local personnel as appropriate. The Vendor shall designate a Representative to act on Vendor's behalf for all purposes, including execution of Change Orders and Requests for Payment.

Any notice or communication required or permitted to be given under this Contract must be in writing. The initial contact information of the parties, which one party may change by giving written notice to the other party, are as follows:

| | | | |
|---|---|---|---|
| **Entity Name** | City of La Marque | **Vendor Name** | Mustang Cat |
| **Entity Address 1** | 1111 Bayou Road | **Vendor Address 1** | 12800 Northwest Freeway |
| **Entity Address 2** | La Marque, Texas 77568 | **Vendor Address 2** | Houston, TX 77040 |
| | | | |
| **Entity Representative for Project** | | **Vendor Representative for Project** | |
| **Name** | Amanda Hobby | **Name** | Stuart Newton |
| **Title** | Assistant Director of Public Works | **Title** | Government Sales Rep |
| **Phone** | (409) 795-7996 | **Phone** | 713-460-2000 |
| **Email** | a.hobby@cityoflamarque.org | **Email** | snewton@mustangcat.com |
| **Entity Billing Contact** | | **Vendor Billing Contact** | |
| **Name** | Gina Galicia | **Name** | Shemell Scott |
| **Title** | Accounts Payable Clerk | **Title** | Credit Supervisor |
| **Phone** | (409) 938-9214 | **Phone** | 713-452-7264 |
| **Email** | g.galicia@cityoflamarque.org | **Email** | sscott@mustangcat.com |

## SECTION 1.2 PARTS INCORPORATED

Parts Incorporated. In addition to the Exhibits identified below which are incorporated into this Contract, it is understood and agreed that additional terms of this Contract are to be performed in accordance with the proposal documents (scope of work, images, and specifications), submitted proposal response and related exhibits, affidavits, addendums, statutory requirements, and the ARPA Terms & Conditions.

Exhibits

| | |
|---|---|
| Exhibit A1 | Scope of Work |
| Exhibit A2 | Payment & Pricing Schedule |
| Exhibit A3 | Request for Payment |
| Exhibit B | ARPA Required Contract Provisions |
| Exhibit C | Other Relevant Information/Special Conditions for Construction |
| Exhibit D | Insurance Certificate |
| Exhibit E | Bid, Performance, and Payment Bonds |
| Exhibit F | Eligibility Verification (SAM.gov) |
| Exhibit G | Certificate of Interested Parties (Form 1295) |

## SECTION 1.4 CONTRACT DOCUMENTS

By reference, the Contract Documents consist of:

a. This Contract and all exhibits listed, contained, or referenced in this Contract.

b. All Addenda issued before the Effective Date of this Contract;

c. All Alternates accepted by the Entity before the Effective Date of this Contract;

d. All Change Orders issued after the Effective Date of this Contract; and

e. The response submitted by Vendor in response to the IFB issued by Entity for this Project.

The Contract and Exhibit Documents form the entire and integrated Contract between Entity and Vendor, and supersede all prior negotiations, representations, or agreements, written or oral. To the extent of any conflict between Vendor's Proposal and any other Contract Document, the Contract Documents shall govern.

If there is an irreconcilable difference between or among the various documents that make up the Contract Documents, the interpretation that provides for a higher quality of material and/or workmanship will prevail over all other interpretations.

### 1.4.1 Term of Contract and Delivery Schedule – Commencement of Work

Entity shall issue a Notice to Proceed (NTP) identifying the date for commencement of the Work. Vendor shall achieve substantial completion of the Work within 90 calendar days after the commencement date; as such completion date may be extended by approved Change Orders. THE TIME SET FOR COMPLETION OF THE WORK IS AN ESSENTIAL ELEMENT OF THE CONTRACT. In any event, all of the services required and performed hereunder shall be completed no later than December 31, 2024.

### 1.4.2 Pre-Existing Conditions

Vendor acknowledges that it has been provided access to the existing improvements and conditions on the Project site and that it has thoroughly investigated those conditions. Vendor's investigation was instrumental in preparing its bid to perform the Work. Vendor shall not make or be entitled to any adjustment to the Contract Time or the Contract Sum arising from Project conditions that the Vendor discovered or, in the exercise of reasonable care, should have discovered

in Vendor's investigation.

### 1.4.3 Liquidated Damages

Vendor and Entity agree that a breach of this Contract as to completion time will cause damage to the Entity, but further agree that such damage cannot be accurately measured. Therefore, the Parties agree that $100.00 shall be subtracted from the Contract amount for each and every calendar day that the Work or any portion of the Work remains uncompleted after the expiration of the time period specified in the Notice to Proceed, or as extended by a change order.

### 1.4.4 Dispute Resolution

Disputes arising under the Contract shall be submitted to a process of resolution pursuant to alternative dispute resolution practices, such as mediation, binding arbitration, or non-binding arbitration pursuant to industry standards, prior to being submitted to a court for adjudication. It is understood that the Entity shall have the right to request mediation if services being provided are deemed deficient in any way.

### 1.4.5 Acquisition, Merger, Sale and/or Transfer of Business, etc.

It is understood by all parties that if, during the life of the Contract, the Vendor disposes of his/her business concern by acquisition, merger, sale, and or/transfer or by any means conveys his/her interest(s) to another party, all obligations are transferred to that new party. In this event, the new vendor will be required to submit all documentation/legal instruments that were required in the original bid/contract. Any change shall be approved by the Entity, who retains the right to reject the transfer of the contract.

### 1.4.6 Termination of Contract For Cause

This Contract may be terminated by the Entity for cause, including any nonperformance by the Vendor; failure of the Vendor to fulfill in a timely and proper manner its obligations under this Contract; or violation of any of the covenants, agreements, or stipulations of the Contract, upon thirty (30) days' written notice to Vendor including a statement of the reasons, therefore. The determination of the Entity as to the cause of termination and the appropriateness thereof shall be final and binding upon both Entity and Vendor. Cause for termination shall include any material failure by Vendor to comply with any terms of this Contract.

a. In such event, all finished or unfinished services, documents, data, maps, studies, surveys, drawings, models, photographs, and reports prepared by the Vendor under this Contract shall, at the option of the Entity, become its property, and the Vendor shall be entitled to receive just and equitable compensation for any work satisfactorily completed hereunder.

b. Notwithstanding the above, the Vendor shall not be relieved of liability to the Entity for damages sustained by the Entity by virtue of any breach of this Contract by the Vendor, and the Entity may withhold any payments to the Vendor for the purposes of set-off until such time as the exact amount of damages due the Entity from the Vendor is determined.

c. The Vendor agrees to indemnify and hold the Entity harmless from any liability to subcontractors or suppliers concerning payment for work performed or goods supplied arising out of the lawful termination of the Contract by the Entity under this provision.

d. In case of default by the Vendor, the Entity may procure the goods or services from other sources and hold the Vendor responsible for any excess cost.

e. Continuation of the terms of the Contract beyond the fiscal year is contingent on availability of funds in the following year's budget. In the event of unavailability of such funds, the Entity reserves the right to cancel the Contract.

f. If this Contract is terminated for cause, excluding funding discontinuance or disapproval, Vendor shall have the right to attempt to cure its failure during the thirty (30) day period prior to termination to the satisfaction of the Entity at the Entity's sole discretion.

### 1.4.7 Termination of Contract For Convenience of the Entity

The Entity may terminate this Contract at any time by giving at least thirty (30) days' notice in writing to the Vendor. If the Vendor is terminated by the Entity as provided herein, the Vendor will be paid for actual services provided or delivered purchases that are determined acceptable at the sole discretion of the Entity, less payments of compensation previously made. Vendor

### 1.4.8 Post Expiration and Termination Procedures

Upon expiration or in the event of a prior termination, all remaining and unspent ARPA funds, shall immediately become the sole and separate property of the Entity and the Vendor shall perform all acts and execute all instruments necessary to transfer and assign such funds to the Entity. All finished or unfinished documents, data, studies, reports, and work products prepared by the Vendor under this Contract or with grant funds shall, at the option of the Entity, become Entity's property.

### 1.4.9 Transitional Period

In the event services are terminated by contract expiration or by voluntary termination by either the Vendor or the Entity, the Vendor shall continue all terms and conditions of said Contract for a period not to exceed thirty (30) days at the Entity's request.

### 1.4.10 Ownership of Material

The Entity shall retain all of its rights and interest in any and all documents and property, both hard copy and digital furnished by the Entity to the Vendor for the purpose of assisting the Vendor in the performance of this Contract. All such items shall be returned immediately to the Entity at the expiration or termination of the Contract or completion of any related services pursuant thereto, whichever comes first. None of the documents and/or property shall, without the written consent of the Entity, be disclosed to others or used by the Vendor or permitted by the Vendor to be used by their parties at any time except in the performance of the resulting Contract. Ownership of all data, materials and documentation originated and prepared for the Entity pursuant to this Contract shall belong exclusively to the Entity. All data, reports, computerized information, programs, and materials related to this Project shall be delivered to and become the property of the Entity upon completion of the Project. The Vendor shall not have the right to use, sell, or disclose the total of the interim or final work products, or make available to third parties, without the prior written consent of the Entity.

## SECTION 1.5 CONTRACT SUM AND PAYMENTS

The Vendor shall be compensated per the schedule below. Payment to the Vendor shall be based on satisfactory completion of identified services and/or deliverables and payment/invoicing terms as stated in the IFB, or as mutually agreed upon and contained in this Contract. Payment is expressly contingent upon the availability of ARPA funding.

### 1.5.1 Contract Sum

Entity shall pay Vendor for performance of its obligations under this Contract, including the Base Proposal and Alternate Proposals (if any), the sum of [Spelled out dollar amount here] ($000,000.00), and make payment in accordance with the provisions of this Section.

### 1.5.2 Payment & Pricing Schedule

A Payment & Pricing Schedule (see **Exhibit A2**) subdividing the Project into its respective parts (f needed), and which includes values for all items comprising the Project will serve as the basis for payments made to Vendor.

### 1.5.3 Vendor's Payment Obligations

Vendor shall promptly pay all bills for labor and material performed and furnished by others in connection with this Contract.

a. Firm shall submit an invoice upon completion of each milestone. Deliverables will be considered complete only upon inspection and written acceptance by the Entity. Each invoice shall include deliverable(s) completed and

the price for each. **The final request for reimbursement must be received by City/County no later than September 30, 2026.**

### 1.5.4 Request for Payment

As instructed, all payment requests must be submitted on the Request for Payment (See **Exhibit A3**) including required attachments. Notwithstanding the certification of Vendor's payment requests, the Entity or its Representative will independently review Vendor's payment requests and make a determination as to the amount properly payable to Vendor.

### 1.5.5 Offsets; Deductions; Withholding

a. Entity is an agency of the State of Texas and materials and services utilized in the provision of services or purchases may be exempt from state and local taxes. Vendor is responsible for taking full advantage of all tax exemptions applicable to the Project. Entity will deduct from the Requests for Payment and from the Request for Final Payment any taxes paid for materials or services that were entitled to tax exemption.

b. Amounts assessed as liquidated damages per the above Section of this Contract and other amounts to which Entity is entitled by way of setoff or recovery, if any, shall be deducted from any amounts due Vendor.

c. Notwithstanding any other contractual provision to the contrary, Entity may withhold any payment from Vendor to the extent reasonably required to protect Entity interests under any of the following circumstances: failure to perform work in accordance with Contract Documents; insufficient documentation in Application for Payment; failure to pay subcontractors, employees, hired laborers or materials suppliers; failure to obtain, renew or maintain insurance coverage as required in this Contract; failure to meet schedule requirements or other scenarios that causes the Entity, in good faith judgment, to determine that the remaining balance will not be sufficient to complete the Work in accordance with this Contract. The right to withhold payment is contingent on giving Vendor a minimum of seven (7) calendar days' written notice of specific defects or defaults and an opportunity to cure same, and on Vendor's failure to cure or to take diligent steps to cure within such seven (7) calendar days.

### 1.5.6 Final Payment

Vendor's request for Final Payment must not be made until all Work is completed, all requirements of the Vendor Documents have been satisfied, and Vendor delivers the services or equipment.

## SECTION 2. ENTITY RESPONSIBILITIES

### SECTION 2.1 GENERAL

a. Entity will cooperate in a timely manner in providing information regarding its requirements.

b. Entity will review and provide final approval of the general schedule; setting the plan for milestone dates and completion or delivery.

c. If the Entity has actual knowledge of any fault or defect or non-conformance with the Specifications, the Entity shall give prompt written notice of such fault, defect, or non-conformance to Vendor.

d. The Entity may designate one or more inspectors of its own who will be given access to the Work as requested or needed. The provision of such inspectors will not reduce or lessen in any respect Vendor's responsibilities for the Work.

e. The Entity may furnish or obtain all legal, accounting, auditing, and insurance counseling services for itself as may be necessary for the Project.

## SECTION 3. SCOPE OF WORK

### SECTION 3.1 GENERAL

Vendor has overall responsibility for and shall furnish all materials, equipment, tools, and labor necessary and reasonably inferable to complete the Work, or any phase of the Work, in accordance with Entity's requirements and the terms of the Contract Documents, including the Drawings, Specifications, Addenda, details, and other documents prepared by Vendor and listed in the attached Exhibits, if applicable.

Vendor's duties as set forth herein shall at no time be in any way diminished by reason of any approval by the Entity nor shall Vendor be released from any liability by reason of such approval by Entity, it being understood that Entity at all times is ultimately relying upon Vendor's skill and knowledge in performing the services required hereunder.

### SECTION 3.2 PROJECT CONTROL

Vendor shall supervise and direct the Work and shall be solely responsible for means, methods, techniques, sequences, and procedures for the Work. Vendor shall promptly correct any defective or non-conforming Work at Vendor's sole expense and without cost to Entity.

### SECTION 3.3 SUBVENDORS

Vendor shall award and enter into all Subcontracts necessary and appropriate to provide all labor and materials for the scope of work.

a. Vendor shall monitor the Work of the Subcontractors as required and coordinate such Work with a goal to attain Substantial Completion not later than the date for Substantial Completion and at a cost not to exceed the Contract Sum.

b. Upon request, Vendor shall provide Entity with complete, unaltered copies of all Subcontracts, and all amendments thereto.

### SECTION 3.4 HUB SUBCONTRACTING PLAN

Vendor shall comply with the requirements of the HUB Subcontracting Plan and shall not make any changes to the HUB Subcontracting Plan without Entity's written approval.

### SECTION 3.5 KEY TASKS

a. Provide services and purchase of equipment in accordance with delivery schedules and other prescribed timelines herein.

b. Provide a warranty on all purchased equipment.

c. Provide excellent customer service. Firm shall be responsive to requests and communicate on a regular basis with the Entity.

d. Provide and maintain all original and copies of supporting documentation.

e. Furnish progress reporting as determined or requested by the Entity.

f. Support and assist the Entity during state/federal monitoring or auditing activities, including providing financial information, reports, and other requests that may be required.

### SECTION 3.6 SCHEDULING

Vendor is solely responsible for delivery of the services/equipment in accordance with the Contract Documents on or before the date specified in the Schedule.

### SECTION 3.7 NON-CONFORMING WORK

Entity may reject any defective or non-conforming Work on the Project of which Entity becomes aware and Vendor shall promptly correct any such defect at Vendor's own cost without increasing the Contract Sum. Upon discovering that any portion of the Work does not conform with Entity's design concept and/or requirements, including the Design Guidelines and Standard Specifications, due to an error or omission in any Construction Document materials prepared or furnished by or on behalf of Vendor, Vendor shall promptly correct such condition at no additional cost to Entity. If Vendor refuses or fails to correct (or improperly corrects) any such condition within a reasonable time after notice, Entity may cause the condition to be corrected and offset the cost of such correction against any monies owed to Vendor; provided, however, if no monies are owed Vendor at the time the condition is discovered or at the time the condition is corrected by Entity, Vendor shall promptly reimburse the Entity for all expenses incurred to correct the condition. Vendor shall warranty all corrective Work, whether performed by or through Vendor or by a third party retained by Entity in accordance with the immediately preceding sentence due to Vendor's refusal or failure to correct properly any non-conforming Work.

## SECTION 3.8 INDEMNIFICATION

Vendor covenants and agrees to indemnify, hold harmless and defend, at its own sole expense, the Entity and its officers, agents, servants, and employees from and against any and all claims or suits for property loss or damage and/or personal injury, including death, to any and all persons, of whatsoever kind or character, whether real or asserted, arising out of or in connection with the execution, performance, attempted performance, or nonperformance of the services under this Contract and/or the operations, activities, and services of the activities described herein; and Vendor hereby assumes all liability and responsibility of the entity and its officers, agents, servants, and employees for any and all claims or suits for property loss or damage and/or personal injury, including death, to any and all persons, of whatsoever kinds or character, whether real or asserted, arising out of or in connection with the execution, performance, attempted performance, or nonperformance of the services or this Contract and/or the operations, activities, and services described herein. Vendor likewise covenants and agrees to and does hereby indemnify and hold harmless entity from and against any and all injury, damage, or destruction of property of entity, arising out of or in connection with all acts or omissions of Vendor, its officers, members, agents, employees, contractors, subcontractors, invitees, licensees, and project participants. Vendor agrees to and shall release Entity, its agents, employees, officers, and legal representatives from all liability for injury, death, damage, or loss to persons or property sustained in connection with or incidental to performance of the services under this Contract.

Vendor shall require all of its contractors and subcontractors to include in its contracts and subcontracts a release and indemnity in favor of the Entity in substantially the same form as above. The indemnity and liability release provided for above shall not apply to any liability resulting from the sole negligence or fault of the Entity, its officers, agents, employees or separate Vendors, and in the event of joint and concurring negligence or fault of the Entity and Vendor, responsibility and indemnity, if any, shall be apportioned in accordance with the laws of the State of Texas, without waiving any governmental immunity available to the entity under Texas law and without waiving any defenses of the parties under Texas law.

The provisions of this section are solely for the benefit of the parties and are not intended to create or grant any rights, contractual or otherwise, to any other person or entity. This section survives termination or expiration of this Contract.

## SECTION 3.9 INSURANCE & BONDING

If applicable, Vendor shall provide Insurance and Bid, Performance, and Payment Bonds as prescribed by Entity in the Solicitation documentation and included here as **Exhibit D** and **Exhibit E.**

# SECTION 4. REQUIRED PROVISIONS

The Vendor shall comply with the following items:

## SECTION 4.1 TERMS AND CONDITIONS

The Vendor agrees to comply with the requirements of Section 503 of the American Rescue Plan Act (ARPA), regulations adopted by Treasury pursuant to Section 603(f) of the Act, and guidance issued by Treasury regarding the foregoing. Vendor also specifically agrees to comply with the ARPA Terms & Conditions attached to this Contract in **Exhibit B.**

**SECTION 4.2 DEBARMENT AND SUSPENSION**

Vendor has provided proof of registration, active/good standing, and non-debarment status in the System for Award Management. Should this status change, the Vendor must notify the Entity immediately.

**SECTION 4.3 ASSURANCES OF COMPLIANCE WITH TITLE VI**

The Vendor shall comply with Title VI of the Civil Rights Act of 1964, which prohibits recipients of federal financial assistance from excluding from a program or activity, denying benefits of, or otherwise discriminating against a person on the basis of race, color, or national origin (42 U.S.C. § 2000d et seq.), as implemented by the Department of the Treasury's Title VI regulations, 31 CFR Part 22, which are herein incorporated by reference and made a part of this contract. Title VI also includes protection to persons with "Limited English Proficiency" in any program or activity receiving federal financial assistance, 42 U.S.C. § 2000d et seq., as implemented by the Department of the Treasury's Title VI regulations, 31 CFR Part 22, and herein incorporated by reference and made a part of this contract.

**SECTION 4.4 LOBBYING CERTIFICATION & DISCLOSURE**

No Federal appropriated funds have been paid or will be paid, by or on behalf of the undersigned, to any person for influencing or attempting to influence an officer or employee of an agency, a Member of Congress, an officer or employee of Congress, or an employee of a Member of Congress in connection with the awarding of any Federal contract, the making of any Federal grant, the making of any Federal loan, the entering into of any cooperative agreement, and the extension, continuation, renewal, amendment, or modification of any Federal contract, grant, loan, or cooperative agreement.

**SECTION 4.5 ETHICS MATTERS**

Vendor and its employees, agents, representatives, and subcontractors have ready and understand the Entity's Conflict of Interest Policy, State of Texas Standards of Conduct and Conflict of Interest Provisions available at Government Code Chapter 572: Personal Financial Disclosure, Standards of Conduct, and Conflict of Interest (state.tx.us), and applicable state ethics laws and rules available. Neither Vendor nor its employees, agents, representatives, or subcontractors will assist or cause Entity employees to violate the Conflict of Interest policies, provisions described by State of Texas Standards of Conduct and Conflict of Interest Provisions, or applicable state ethics laws or rules.

**SECTION 4.6 MAINTENANCE AND ACCESS TO RECORDS**

The Vendor shall maintain records and financial documents sufficient to evidence in compliance with Section 603(c) of the Act, Treasury's regulations implementing that section, and guidance issued by Treasury regarding the foregoing.

The Treasury Office of Inspector General, the Government Accountability Office and the Texas Office of the State Comptroller, or their authorized representatives, shall have the right of access to records (electronic and otherwise) of the Vendor in order to conduct audits or other investigations and all records shall be made available upon request. Records shall be maintained by the Vendor for a period of five (5) years after all funds have been expended or returned to the Treasury, whichever is later.

## SECTION 5. MISCELLANEOUS PROVISIONS

**SECTION 5.1 GENERAL**

a. In any case one or more of the provisions contained in this Contract shall for any reason be held to be invalid, illegal, or unenforceable in any respect, such invalidity, illegality, or unenforceability shall not affect any other provision thereof and this Contract shall be construed as if such invalid, illegal, or unenforceable provision had never been contained herein.

b. If any action at law or in equity is necessary to enforce or interpret the terms of this Contract, the prevailing party shall be entitled to reasonable attorney's fees, costs, and necessary disbursements in addition to any other relief to which such party may be entitled.

c. This Contract may be amended by mutual agreement of the parties hereto and a writing to be attached to be

incorporated into this Contract.

d. Licenses, Permits, Taxes, Fees, Laws, and Regulations

i. Vendor warrants that it will obtain, maintain in effect, and pay the cost for all licenses, permits, or certifications that may be necessary for Vendor's performance of this Contract.

ii. Vendor will be responsible for the payment of all taxes, excises, fees, payroll deductions, employee benefits (if any), fines, penalties or other payments required by federal, state, or local law or regulation in connection with Vendor's performance of this Contract.

iii. Vendor will comply with and will be responsible for requiring its officers and employees to comply with all applicable federal, state, and local laws and regulations, and the rules and regulations of the Entity.

## SECTION 5.2 CAPACITY TO PERFORM

By execution of this Contract, Vendor is certifying that they have the capacity to perform and complete the Scope of Work as provided.

## SECTION 5.3 LIMITATION OF LIABILITY

Except for the obligation of Entity to pay Vendor certain fees, costs, and expenses to the extent expressly set forth in this Contract, the Entity shall have no liability to Vendor or to anyone claiming through or under Vendor by reason of the execution or performance of this Contract. Notwithstanding any obligation or liability of Entity to Vendor, no present or future partner or affiliate of the Entity or any agent, officer, director, or employee of the Entity or anyone claiming under the Entity, has or shall have any personal liability to Vendor or to anyone claiming through or under Vendor by reason of the execution or performance of this Contract.

## SECTION 5.4 ASSIGNMENT

This Contract is a personal service contract for the services of Vendor, and neither Vendor's interest in this Contract (including, but not limited to Vendor's fees due hereunder), nor Vendor's duties hereunder may be assigned or delegated to a third party except as specifically set forth in this Contract.

## SECTION 5.5 GOVERNING LAW AND VENUE

The Vendor agrees to comply with the requirements of Section 603 of the Act, regulations adopted by Treasury pursuant to Section 603(f) of the Act, and guidance issued by Treasury regarding the foregoing.

Additionally, all applicable local government codes for the State of Texas also apply to this Contract. All equipment, supplies, and work furnished under this Contract shall comply with applicable laws, ordinances, and regulations. Vendor shall obtain and pay for such permits and inspections as are required for the legal performance of this work, unless otherwise specified. Vendor shall comply with all federal and state laws and Entity's Ordinances and Codes applicable to the Vendor's operation under this Contract. These Specifications and the Contract resulting here from shall be fully governed by the laws of the State of Texas and shall be fully performable in La Marque (Entity Name), Texas, where venue for any proceeding arising hereunder will lie.

This Contract will be governed by the laws of the State of Texas without reference to its conflicts of law provisions. Venue for any suits arising from this Contract will be in a court of competent jurisdiction in Galveston County, Texas.

## SECTION 5.6 WAIVERS

No delay or omission by either Party in exercising any right or power accruing upon the non-compliance or failure of performance by the other Party of any provision of this Contract or the Contract Documents will impair any such right or power or be construed to be a waiver thereof. A waiver by either Party of any of the covenants, conditions, or agreements of this Contract or any of the Contract Documents to be performed by the other party will not be construed to be a waiver of any subsequent breach of this Contract or the Contract Documents or of any other covenant, condition or agreement contained in this Contract or the Contract Documents.

## SECTION 5.7 SEVERABILITY

If any provision of this Contract is for any reason be held invalid or unenforceable in any respect, such invalidity or unenforceability shall not affect any other provision of this Contract and this Contract will be construed as if such invalid or unenforceable provision had not been included herein.

**SECTION 5.8 NEW LAWS**

Parties agree that if there is a change in any laws, rules, or regulations affecting the performance related to this Contract and enacted after the Effective Date of this Contract, the Parties will enter into good faith negotiations to renegotiate the affected terms of this Contract.

BY: _____
(Entity Official)

_____
(Printed Name)

_____
(Title)

_____
(Date)

BY: Mustang Cat
(Vendor's Authorized Representative)

Stuart Newton
(Printed Name)

Government Sales Rep
(Title)

10/11/24
(Date)

## SECTION 6. EXHIBITS

## THE FOLLOWING DOCUMENTS MUST BE COMPLETED AND ATTACHED TO THE CONTRACT:

| | |
|---|---|
| Exhibit A1 | Scope of Work |
| Exhibit A2 | Payment & Pricing Schedule |
| Exhibit A3 | Request for Payment |
| Exhibit B | ARPA Required Provisions (ARPA Terms & Conditions) |
| Exhibit C | Other Relevant Information |
| Exhibit D | Insurance Certificate (if applicable) |
| Exhibit E | Bid, Performance, and Payment Bonds (if applicable) |
| Exhibit F | Eligibility Verification (SAM.gov) |
| Exhibit G | Certificate of Interested Parties (Form 1295) |

## Exhibit A1 – Scope of Work

To be populated with solicitation Scope of Work

## Exhibit A2 – Payment & Pricing Schedule

The terms for payment for the contract are as follows:

**Payment Schedule:**

Payment will be made within 30 days of a Request for Payment and only after delivery of all services and/or purchases and acceptance by the Entity.

**Pricing Schedule:**

Prices for all goods and/or services shall be all inclusive.

Entity is an agency of the State of Texas and materials and services utilized in the provision of services or purchases may be exempt from state and local taxes. Vendor is responsible for taking full advantage of all tax exemptions applicable to the Project. Entity will deduct from the Requests for Payment and from the Request for Final Payment any taxes paid for materials or services that were entitled to tax exemption.

**Lump Sum Price:** Vendor shall provide pricing in the table below to complete the scope of services contained in **Exhibit A1**, Scope of Work, in accordance with the specifications contained in this document. Costs include all applicable services (i.e. labor, materials, profit, bonding, insurance, permitting, general conditions, and other costs) to provide a turnkey product.

(Note to Entity: Component pricing should be based on the identified components of the scope of work contained in **Exhibit A1**). An example is provided below:

| SCOPE OF WORK | PRICE |
|---|---|
| Caterpillar 303.5 Mini Excavator | $62,633.44 |
| Caterpillar 303.5 Mini Excavator | $62,633.44 |
| | $ |
| | $ |
| **TOTAL LUMP SUM PRICE (TOTAL OF ABOVE LINE ITEMS)** | $125,266.88 |

## Exhibit A3 – Request for Payment

| | | | |
|---|---|---|---|
| **Project Name:** | (2) 2024 Mini-Excavators | | |
| **Vendor Name:** | Mustang Cat | | |
| **Date of Request:** | 10/11/24 | | |
| **Contact Name:** | Stuart Newton | | |
| **Contact Phone:** | 713-460-2000 | **Contact Email:** | snewton@mustangcat.com |

| Item for Payment | Description | Unit Cost or Percent Complete | # of Units | Total Amount |
|---|---|---|---|---|
| 303.5 | Caterpillar Mini Excavator | $62,633.44 | 2 | $125,266.88 |
| | | | | |
| | | | | |
| **TOTAL** | | | | |

| X | Attachments |
|---|---|
| 1 | 24" Bucket for each machine |
| | |

| Submitted By | |
|---|---|
| **Name and Title** | Stuart Newton - Government Sales Rep |
| **Signature** | |

**CERTIFICATION:** I certify that this Request for Payment contains costs associated with the provision of services in accordance with the terms of the contract. I also certify that all required documentary evidence has been submitted along with the Request for Payment as instructed, including any documentation associated with requirement to pay prevailing wages.

By signing this Request for Payment, I certify to the best of my knowledge and belief that information provided in this Request is true, complete, and accurate. I am aware that any false, fictitious, or fraudulent information, or the omission of any material fact, may subject me to criminal, civil or administrative penalties for fraud, false statements, false claims or otherwise.

**WARNING**: Section 1001 of Title 18 U.S. code makes it a criminal offense to make willful, false statements or misrepresentation of any material fact involving the use of or obtain federal funds.

# Exhibit B – ARPA Required Provisions

2 CFR 200.327 Contract provisions. The Non-Federal entity's contracts should contain applicable provisions described in Appendix II to Part 200—Contract Provisions for Non-Federal Entity Contracts Under Federal Awards. The Non-Federal entity's contracts must contain the provisions described in Appendix II to Part 200—Contract Provisions for Non-Federal Entity Contracts Under Federal Awards, as applicable.

| THRESHOLD | PROVISION | CITATION | PROVISION APPLIES TO |
|---|---|---|---|
| | **2 CFR 200 Appendix II (A-L)** | | |
| >$250,000 (Simplified Acquisition Threshold) | Contracts for more than the simplified acquisition threshold, which is the inflation adjusted amount determined by the Civilian Agency Acquisition Council and the Defense Acquisition Regulations Council (Councils) as authorized by 41 U.S.C. 1908, must address administrative, contractual, or legal remedies in instances where contractors violate or breach contract terms, and provide for such sanctions and penalties as appropriate. | 2 CFR 200 APPENDIX II (A) | Contractor RFP/IFB Contractor RFQ Subrecipients |
| >$10,000 | All contracts in excess of $10,000 must address termination for cause and for convenience by the Non-Federal entity including the manner by which it will be affected and the basis for settlement. | 2 CFR 200 APPENDIX II (B) | Contractor RFP/IFB Contractor RFQ Subrecipients |
| None | Equal Employment Opportunity. Except as otherwise provided under 41 CFR Part 60, all contracts that meet the definition of "federally assisted construction contract" in 41 CFR Part 60-1.3 must include the equal opportunity clause provided under 41 CFR 60-1.4(b), in accordance with Executive Order 11246, "Equal Employment Opportunity" (30 FR 12319, 12935, 3 CFR Part, 1964-1965 Comp., p. 339), as amended by Executive Order 11375, "Amending Executive Order 11246 Relating to Equal Employment Opportunity," and implementing regulations at 41 CFR part 60, "Office of Federal Contract Compliance Programs, Equal Employment Opportunity, Department of Labor."<br>41 CFR 60-1.4 Equal opportunity clause.<br>(b) Federally assisted construction contracts. (1) Except as otherwise provided, each administering agency shall require the inclusion of the following language as a condition of any grant, contract, loan, insurance, or guarantee involving federally assisted construction which is not exempt from the requirements of the equal opportunity clause:<br>The [recipient] hereby agrees that it will incorporate or cause to be incorporated into any contract for construction work, or modification thereof, as defined in the regulations of the Secretary of Labor at 41 CFR Chapter 60, which is paid for in whole or in part with funds obtained from the Federal Government or borrowed on the credit of the Federal Government pursuant to a grant, contract, loan, insurance, or guarantee, or undertaken pursuant to any Federal program involving such grant, contract, loan, insurance, or guarantee, the following equal opportunity clause:<br>During the performance of this contract, the contractor agrees as follows:<br>(9) The contractor will not discriminate against any employee or applicant for employment because of race, color, religion, sex, sexual orientation, gender identity, or national origin. The contractor will take affirmative action to ensure that applicants are employed, and that employees are treated during employment without regard to their race, color, religion, sex, sexual orientation, gender identity, or national origin. Such action shall include, but not be limited to the following:<br>Employment, upgrading, demotion, or transfer; recruitment or recruitment advertising; layoff or termination; rates of pay or other forms of compensation; and selection for training, including apprenticeship. The contractor agrees to post in conspicuous places, available to employees and applicants for employment, notices to be provided setting forth the provisions of this nondiscrimination clause.<br>(10) The contractor will, in all solicitations or advertisements for employees placed by | 2 CFR 200 APPENDIX II (C) and 41 CFR §60-1.4(b) | Contractor RFP/IFB Contractor RFQ Subrecipients |

| THRESHOLD | PROVISION | CITATION | PROVISION APPLIES TO |
|---|---|---|---|
| | or on behalf of the contractor, state that all qualified applicants will receive consideration for employment without regard to race, color, religion, sex, sexual orientation, gender identity, or national origin.<br>(11) The contractor will not discharge or in any other manner discriminate against any employee or applicant for employment because such employee or applicant has inquired about, discussed, or disclosed the compensation of the employee or applicant or another employee or applicant. This provision shall not apply to instances in which an employee who has access to the compensation information of other employees or applicants as a part of such employee's essential job functions discloses the compensation of such other employees or applicants to individuals who do not otherwise have access to such information, unless such disclosure is in response to a formal complaint or charge, in furtherance of an investigation, proceeding, hearing, or action, including an investigation conducted by the employer, or is consistent with the contractor's legal duty to furnish information.<br>(12) The contractor will send to each labor union or representative of workers with which he has a collective bargaining agreement or other contract or understanding, a notice to be provided advising the said labor union or workers' representatives of the contractor's commitments under this section and shall post copies of the notice in conspicuous places available to employees and applicants for employment.<br>(13) The contractor will comply with all provisions of Executive Order 11246 of September 24, 1965, and of the rules, regulations, and relevant orders of the Secretary of Labor.<br>(14) The contractor will furnish all information and reports required by Executive Order 11246 of September 24, 1965, and by rules, regulations, and orders of the Secretary of Labor, or pursuant thereto, and will permit access to his books, records, and accounts by the administering agency and the Secretary of Labor for purposes of investigation to ascertain compliance with such rules, regulations, and orders.<br>(15) In the event of the contractor's noncompliance with the nondiscrimination clauses of this contract or with any of the said rules, regulations, or orders, this contract may be canceled, terminated, or suspended in whole or in part and the contractor may be declared ineligible for further Government contracts or federally assisted construction contracts in accordance with procedures authorized in Executive Order 11246 of September 24, 1965, and such other sanctions may be imposed and remedies invoked as provided in Executive Order 11246 of September 24, 1965, or by rule, regulation, or order of the Secretary of Labor, or as otherwise provided by law.<br>(16) The contractor will include the portion of the sentence immediately preceding paragraph (1) and the provisions of paragraphs (1) through (8) in every subcontract or purchase order unless exempted by rules, regulations, or orders of the Secretary of Labor issued pursuant to section 204 of Executive Order 11246 of September 24, 1965, so that such provisions will be binding upon each subcontractor or vendor. The contractor will take such action with respect to any subcontract or purchase order as the administering agency may direct as a means of enforcing such provisions, including sanctions for noncompliance:<br>Provided, however, that in the event a contractor becomes involved in, or is threatened with, litigation with a subcontractor or vendor as a result of such direction by the administering agency, the contractor may request the United States to enter into such litigation to protect the interests of the United States.<br>The [recipient] further agrees that it will be bound by the above equal opportunity clause with respect to its own employment practices when it participates in federally assisted construction work: Provided, that if the [recipient] so participating is a State or local government, the above equal opportunity clause is not applicable to any agency, instrumentality or subdivision of such government which does not participate in work on or under the contract.<br>The [recipient] agrees that it will assist and cooperate actively with the administering agency and the Secretary of Labor in obtaining the compliance of contractors and subcontractors with the equal opportunity clause and the rules, regulations, and | | |

| THRESHOLD | PROVISION | CITATION | PROVISION APPLIES TO |
|---|---|---|---|
| | relevant orders of the Secretary of Labor, that it will furnish the administering agency and the Secretary of Labor such information as they may require for the supervision of such compliance, and that it will otherwise assist the recipient agency in the discharge of the agency's primary responsibility for securing compliance.<br><br>The recipient further agrees that it will refrain from entering into any contract or contract modification subject to Executive Order 11246 of September 24, 1965, with a contractor debarred from, or who has not demonstrated eligibility for, Government contracts and federally assisted construction contracts pursuant to the Executive Order and will carry out such sanctions and penalties for violation of the equal opportunity clause as may be imposed upon contractors and subcontractors by the administering agency or the Secretary of Labor pursuant to Part II, Subpart D of the Executive Order. In addition, the [recipient] agrees that if it fails or refuses to comply with these undertakings, the administering agency may take any or all of the following actions: cancel, terminate, or suspend in whole or in part this grant (contract, loan, insurance, guarantee); refrain from extending any further assistance to the [recipient] under the program with respect to which the failure or refund occurred until satisfactory assurance of future compliance has been received from such [recipient]; and refer the case to the Department of Justice for appropriate legal proceedings. | | |
| >$10,000,000 for ARPA but State Provision Applies at any amount and/or<br><br>>$2,000 for CDBG/Braided Funds Projects<br><br>See TX Prevailing Wage Laws | Davis-Bacon Act, as amended (40 U.S.C. 3141-3148). When required by Federal program legislation, all prime construction contracts in excess of $10,000,00 awarded by Non-Federal entities must include a provision for compliance with the Davis-Bacon Act (40 U.S.C. 3141-3144, and 3146-3148) as supplemented by Department of Labor regulations (29 CFR Part 5, "Labor Standards Provisions Applicable to Contracts Covering Federally Financed and Assisted Construction"). In accordance with the statute, contractors must be required to pay wages to laborers and mechanics at a rate not less than the prevailing wages specified in a wage determination made by the Secretary of Labor. In addition, contractors must be required to pay wages not less than once a week. The Non-Federal entity must place a copy of the current prevailing wage determination issued by the Department of Labor in each solicitation. The decision to award a contract or subcontract must be conditioned upon the acceptance of the wage determination. The Non-Federal entity must report all suspected or reported violations to the Federal awarding agency.<br><br>The contracts must also include a provision for compliance with the Copeland "Anti-Kickback" Act (40 U.S.C. 3145), as supplemented by Department of Labor regulations (29 CFR Part 3, "Contractors and Subcontractors on Public Building or Public Work Financed in Whole or in Part by Loans or Grants from the United States"). The Act provides that each contractor or subrecipient must be prohibited from inducing, by any means, any person employed in the construction, completion, or repair of public work, to give up any part of the compensation to which he or she is otherwise entitled. The Non-Federal entity must report all suspected or reported violations to the Federal awarding agency. | 2 CFR 200 APPENDIX II (D) | Contractor RFP/IFB<br><br>Subrecipients |
| >$100,000 | Contract Work Hours and Safety Standards Act (40 U.S.C. 3701-3708). Where applicable, all contracts awarded by the Non-Federal entity in excess of $100,000 that involve the employment of mechanics or laborers must include a provision for compliance with 40 U.S.C. 3702 and 3704, as supplemented by Department of Labor regulations (29 CFR Part 5). Under 40 U.S.C. 3702 of the Act, each contractor must be required to compute the wages of every mechanic and laborer on the basis of a standard work week of 40 hours. Work in excess of the standard work week is permissible provided that the worker is compensated at a rate of not less than one and a half times the basic rate of pay for all hours worked in excess of 40 hours in the work week. The requirements of 40 U.S.C. 3704 are applicable to construction work and provide that no laborer or mechanic must be required to work in surroundings or under working conditions which are unsanitary, hazardous, or dangerous. These requirements do not apply to the purchases of supplies or materials or articles ordinarily available on the open market, or contracts for transportation or | 2 CFR 200 APPENDIX II (E) | Contractor RFP/IFB<br><br>Subrecipients |

| THRESHOLD | PROVISION | CITATION | PROVISION APPLIES TO |
|---|---|---|---|
| | transmission of intelligence. | | |
| None | Rights to Inventions Made Under a Contract or Agreement. If the Federal award meets the definition of "funding agreement" under 37 CFR § 401.2 (a) and the recipient or subrecipient wishes to enter into a contract with a small business firm or nonprofit organization regarding the substitution of parties, assignment or performance of experimental, developmental, or research work under that "funding agreement," the recipient or subrecipient must comply with the requirements of 37 CFR Part 401, "Rights to Inventions Made by Nonprofit Organizations and Small Business Firms Under Government Grants, Contracts and Cooperative Agreements," and any implementing regulations issued by the awarding agency. | 2 CFR 200 APPENDIX II (F) | Contractor RFP/IFB<br>Contractor RFQ<br>Subrecipients |
| >$150,000 | Clean Air Act (42 U.S.C. 7401-7671q.) and the Federal Water Pollution Control Act (33 U.S.C. 1251-1387), as amended – Contracts and subgrants of amounts in excess of $150,000 must contain a provision that requires the Non-Federal award to agree to comply with all applicable standards, orders or regulations issued pursuant to the Clean Air Act (42 U.S.C. 7401-7671q) and the Federal Water Pollution Control Act as amended (33 U.S.C. 1251-1387). Violations must be reported to the Federal awarding agency and the Regional Office of the Environmental Protection Agency (EPA). | 2 CFR 200 APPENDIX II (G) | Contractor RFP/IFB<br>Contractor RFQ<br>Subrecipients |
| >$25,000 | Debarment and Suspension (Executive Orders 12549 and 12689) – A contract award (see 2 CFR 180.220) must not be made to parties listed on the governmentwide exclusions in the System for Award Management (SAM), in accordance with the OMB guidelines at 2 CFR 180 that implement Executive Orders 12549 (3 CFR part 1986 Comp., p. 189) and 12689 (3 CFR part 1989 Comp., p. 235), "Debarment and Suspension." SAM Exclusions contains the names of parties debarred, suspended, or otherwise excluded by agencies, as well as parties declared ineligible under statutory or regulatory authority other than Executive Order 12549. | 2 CFR 200 APPENDIX II (H) | Contractor RFP/IFB<br>Contractor RFQ<br>Subrecipients<br>Vendors |
| >$100,000 | Byrd Anti-Lobbying Amendment (31 U.S.C. 1352) – Contractors that apply or bid for an award exceeding $100,000 must file the required certification. Each tier certifies to the tier above that it will not and has not used Federal appropriated funds to pay any person or organization for influencing or attempting to influence an officer or employee of any agency, a member of Congress, officer or employee of Congress, or an employee of a member of Congress in connection with obtaining any Federal contract, grant or any other award covered by 31 U.S.C. 1352. Each tier must also disclose any lobbying with Non-Federal funds that takes place in connection with obtaining any Federal award. Such disclosures are forwarded from tier to tier up to the Non-Federal award. | 2 CFR 200 APPENDIX II (I) and 24 CFR §570.303 | Contractor RFP/IFB<br>Contractor RFQ<br>Subrecipients |

| THRESHOLD | PROVISION | CITATION | PROVISION APPLIES TO |
|---|---|---|---|
| | See 2 CFR §200.323 - Procurement of Recovered Materials.<br><br>Where applicable, in the performance of contract, pursuant to 2 CFR 200.323, the contractor must comply with section 6002 of the Solid Waste Disposal Act, as amended by the Resource Conservation and Recovery Act. The requirements of Section 6002 include procuring only items designated in guidelines of the Environmental Protection Agency (EPA) at 40 CFR part 247 that contain the highest percentage of recovered materials practicable, consistent with maintaining a satisfactory level of competition, where the purchase price of the item exceeds $10,000 or the value of the quantity acquired during the preceding fiscal year exceeded $10,000; procuring solid waste management services in a manner that maximizes energy and resource recovery; and establishing an affirmative procurement program for procurement of recovered materials identified in the EPA guidelines.<br><br>To the extent that the scope of work or specifications in the contract requires the contractor to provide recovered materials the scope of work or specifications are modified to require that as follows.<br><br>ii. In the performance of this contract, the Contractor shall make maximum use of products containing recovered materials that are EPA-designated items unless the product cannot be acquired—<br>1. Competitively within a timeframe providing for compliance with the contract performance schedule;<br>2. Meeting contract performance requirements; or<br>3. At a reasonable price.<br>iv. Information about this requirement, along with the list of EPA-designated items, is available at EPA's Comprehensive Procurement Guidelines web site, https://www.epa.gov/smm/comprehensive-procurement-guideline-cpg-program.<br>v. The Contractor also agrees to comply with all other applicable requirements of Section 6002 of the "Solid Waste Disposal Act." | 2 CFR 200<br>APPENDIX II (J) | Contractor RFP/IFB<br>Contractor RFQ<br>Subrecipients |
| | See 2 CFR §200.216 - Prohibition on certain telecommunications and video surveillance services or equipment<br><br>(a) Recipients and subrecipients are prohibited from obligating or expending loan or grant funds to:<br>(1) Procure or obtain;<br>(2) Extend or renew a contract to procure or obtain; or<br>(3) Enter into a contract (or extend or renew a contract) to procure or obtain equipment, services, or systems that uses covered telecommunications equipment or services as a substantial or essential component of any system, or as critical technology as part of any system. As described in Public Law 115-232, section 889, covered telecommunications equipment is telecommunications equipment produced by Huawei Technologies Company or ZTE Corporation (or any subsidiary or affiliate of such entities).<br>(i) For the purpose of public safety, security of government facilities, physical security surveillance of critical infrastructure, and other national security purposes, video surveillance and telecommunications equipment produced by Hytera Communications Corporation, Hangzhou Hikvision Digital Technology Company, or Dahua Technology Company (or any subsidiary or affiliate of such entities).<br>(ii) Telecommunications or video surveillance services provided by such entities or using such equipment.<br>(iii) Telecommunications or video surveillance equipment or services produced or provided by an entity that the Secretary of Defense, in consultation with the Director of the National Intelligence or the Director of the Federal Bureau of Investigation, reasonably believes to be an entity owned or | 2 CFR 200<br>APPENDIX II (K) | Contractor RFP/IFB<br>Contractor RFQ<br>Subrecipients |

| THRESHOLD | PROVISION | CITATION | PROVISION APPLIES TO |
|---|---|---|---|
| | controlled by, or otherwise connected to, the government of a covered foreign country.<br>(b) In implementing the prohibition under Public Law 115-232, section 889, subsection (f), paragraph (1), heads of executive agencies administering loan, grant, or subsidy programs shall prioritize available funding and technical support to assist affected businesses, institutions and organizations as is reasonably necessary for those affected entities to transition from covered communications equipment and services, to procure replacement equipment and services, and to ensure that communications service to users and customers is sustained.<br>(c) See Public Law 115-232, section 889 for additional information.<br>(d) See also § 200.471. | | |
| | See 2 CFR §200.322 - Domestic Preferences for Procurements.<br><br>(a) As appropriate and to the extent consistent with law, the Non-Federal entity should, to the greatest extent practicable under a Federal award, provide a preference for the purchase, acquisition, or use of goods, products, or materials produced in the United States (including but not limited to iron, aluminum, steel, cement, and other manufactured products). The requirements of this section must be included in all subawards including all contracts and purchase orders for work or products under this award.<br><br>(b) For purposes of this section:<br>(1) "Produced in the United States" means, for iron and steel products, that all manufacturing processes, from the initial melting stage through the application of coatings, occurred in the United States.<br>(2) "Manufactured products" means items and construction materials composed in whole or in part of non-ferrous metals such as aluminum; plastics and polymer-based products such as polyvinyl chloride pipe; aggregates such as concrete; glass, including optical fiber; and lumber. | 2 CFR 200 APPENDIX II (L) | Contractor RFP/IFB<br>Contractor RFQ<br>Subrecipients |
| | **Additional 2 CFR 200 references & Other Regulations** | | |
| None | The Federal awarding agency must establish conflict of interest policies for Federal awards. The Non-Federal entity must disclose in writing any potential conflict of interest to the Federal awarding agency or pass-through entity in accordance with applicable Federal awarding agency policy. | 2 CFR 200.112 | Contractor RFP/IFB<br>Contractor RFQ<br>Subrecipients |
| None | Contracting with HUB, small and minority businesses, women's business enterprises, and labor surplus area firms.<br>(a) The Non-Federal entity must take all necessary affirmative steps to assure that minority businesses, women's business enterprises, and labor surplus area firms are used when possible.<br>(b) Affirmative steps must include:<br>(1) Placing qualified small and minority businesses and women's business enterprises on solicitation lists;<br>(2) Assuring that small and minority businesses, and women's business enterprises are solicited whenever they are potential sources;<br>(3) Dividing total requirements, when economically feasible, into smaller tasks or quantities to permit maximum participation by small and minority businesses, and women's business enterprises;<br>(4) Establishing delivery schedules, where the requirement permits, which | 2 CFR 200.321 | Contractor RFP/IFB<br>Contractor RFQ<br>Subrecipients |

| THRESHOLD | PROVISION | CITATION | PROVISION APPLIES TO |
|---|---|---|---|
| | encourage participation by small and minority businesses, and women's business enterprises;<br>(5) Using the services and assistance, as appropriate, of such organizations as the Small Business Administration and the Minority Business Development Agency of the Department of Commerce; and<br>(6) Requiring the prime contractor, if subcontracts are to be let, to take the affirmative steps listed in paragraphs (b)(1) through (5) of this section. | | |
| >$10,000 | An NFE (Non-Federal Entity) that is a state agency or an agency of a political subdivision of a state, and the NFE's contractors must comply with Section 6002 of the Solid Waste Disposal Act.<br>Applicable NFEs must include a contract provision requiring compliance with this requirement.<br>This includes contracts awarded by a state agency or political subdivision of a state and its contractors for certain items, as designated by the EPA, with a purchase price greater than $10,000.<br>Indian Tribal Governments and nonprofit organizations are not required to comply with this provision. Additional requirements are listed below. | 2 CFR 200.323 | Contractor RFP/IFB<br>Contractor RFQ<br>Subrecipients |
| None | Financial records, supporting documents, statistical records, and all other Non-Federal entity records pertinent to a Federal award must be retained for a period of three years from the date of submission of the final expenditure report or, for Federal awards that are renewed quarterly or annually, from the date of the submission of the quarterly or annual financial report, respectively, as reported to the Federal awarding agency or pass-through entity in the case of a subrecipient. Federal awarding agencies and pass-through entities must not impose any other record retention requirements upon Non-Federal entities. **All records related to ARPA shall be maintained for 5 years per the ARPA terms, conditions, and regulations.** The only exceptions are the following:<br>(a) If any litigation, claim, or audit is started before the expiration of the 3-year period, the records must be retained until all litigation, claims, or audit findings involving the records have been resolved and final action taken. **All records related to ARPA shall be maintained for 5 years per the ARPA terms, conditions, and regulations.**<br>(b) When the Non-Federal entity is notified in writing by the Federal awarding agency, cognizant agency for audit, oversight agency for audit, cognizant agency for indirect costs, or pass-through entity to extend the retention period.<br>(c) Records for real property and equipment acquired with Federal funds must be retained for 3 years after final disposition. All records related to ARPA shall be maintained for 5 years per the ARPA terms and conditions and regulations.<br>(d) When records are transferred to or maintained by the Federal awarding agency or pass-through entity, the 3-year retention requirement is not applicable to the Non-Federal entity All records related to ARPA shall be maintained for 5 years per the ARPA terms and conditions and regulations. **All records related to ARPA shall be maintained for 5 years per the ARPA terms, conditions, and regulations.**<br>(e) Records for program income transactions after the period of performance. In some cases, recipients must report program income after the period of performance. Where there is such a requirement, the retention period for the records pertaining to the earning of the program income starts from the end of the Non-Federal entity's fiscal year in which the program income is earned.<br>(f) Indirect cost rate proposals and cost allocations plans. This paragraph applies to the following types of documents and their supporting records: Indirect cost rate computations or proposals, cost allocation plans, and any similar accounting computations of the rate at which a particular group of costs is chargeable (such as computer usage chargeback rates or composite fringe benefit rates).<br>(1) *If submitted for negotiation.* If the proposal, plan, or other computation is | 2 CFR 200.334 | Contractor RFP/IFB<br>Contractor RFQ<br>Subrecipients<br>Vendors |

| THRESHOLD | PROVISION | CITATION | PROVISION APPLIES TO |
|---|---|---|---|
| | required to be submitted to the Federal Government (or to the pass-through entity) to form the basis for negotiation of the rate, then the 3-year retention period for its supporting records starts from the date of such submission. **All records related to ARPA shall be maintained for 5 years per the ARPA terms, conditions, and regulations.**<br>(2) *If not submitted for negotiation.* If the proposal, plan, or other computation is not required to be submitted to the Federal Government (or to the pass-through entity) for negotiation purposes, then the 3-year retention period for the proposal, plan, or computation and its supporting records starts from the end of the fiscal year (or other accounting period) covered by the proposal, plan, or other computation. **All records related to ARPA shall be maintained for 5 years per the ARPA terms, conditions, and regulations.** | | |
| None | The Federal awarding agency and the Non-Federal entity should, whenever practicable, collect, transmit, and store Federal award-related information in open and machine-readable formats rather than in closed formats or on paper in accordance with applicable legislative requirements. A machine-readable format is a format in a standard computer language (not English text) that can be read automatically by a web browser or computer system. The Federal awarding agency or pass-through entity must always provide or accept paper versions of Federal award-related information to and from the Non-Federal entity upon request. If paper copies are submitted, the Federal awarding agency or pass-through entity must not require more than an original and two copies. When original records are electronic and cannot be altered, there is no need to create and retain paper copies. When original records are paper, electronic versions may be substituted through the use of duplication or other forms of electronic media provided that they are subject to periodic quality control reviews, provide reasonable safeguards against alteration, and remain readable. | 2 CFR 200.336 | Contractor RFP/IFB<br>Contractor RFQ<br>Subrecipients |
| None | CONTRACTS WITH COMPANIES ENGAGED IN BUSINESS WITH IRAN, SUDAN, OR FOREIGN TERRORIST ORGANIZATION PROHIBITED. A governmental entity may not enter into a governmental contract with a company that is identified on a list prepared and maintained under Section 806.051, 807.051, or 2252.153. The term "foreign terrorist organization" in this paragraph has the meaning assigned to such a term in Section 2252.151(2) of the Texas Government Code. | Texas Government Code 2252.152 | Contractor RFP/IFB<br>Contractor RFQ<br>Subrecipients |
| >$100,000 | PROVISION REQUIRED IN CONTRACT.<br>(a) This section applies only to a contract that:<br>(1) is between a governmental entity and a company with 10 or more full-time employees; and<br>(2) has a value of $100,000 or more that is to be paid wholly or partly from public funds of the governmental entity.<br>(b) A governmental entity may not enter into a contract with a company for goods or services unless the contract contains a written verification from the company that it:<br>(1) does not boycott Israel; and<br>(2) will not boycott Israel during the term of the contract. | Texas Government Code 2271 | Contractor RFP/IFB<br>Contractor RFQ<br>Subrecipients<br>Vendors |
| For Critical Infrastructure Projects | PROHIBITION ON CONTRACTS WITH CERTAIN FOREIGN-OWNED COMPANIES IN CONNECTION WITH CRITICAL INFRASTRUCTURE.<br>PROHIBITED CONTRACTS.<br>(a) A governmental entity may not enter into a contract or other agreement relating to critical infrastructure in this state with a company:<br>(1) if, under the contract or other agreement, the company would be granted direct or remote access to or control of critical infrastructure in this state, excluding access specifically allowed by the governmental entity for product | Texas Government Code, Title 10, Subtitle F, Chapter 2274.0102 | Subrecipients<br>EC 6.1 Awardees |

| THRESHOLD | PROVISION | CITATION | PROVISION APPLIES TO |
|---|---|---|---|
| | warranty and support purposes; and<br>(2) if the governmental entity knows that the company is:<br>(A) owned by or the majority of stock or other ownership interest of the company is held or controlled by:<br>(i) individuals who are citizens of China, Iran, North Korea, Russia, or a designated country; or<br>(ii) a company or other entity, including a governmental entity, that is owned or controlled by citizens of or is directly controlled by the government of China, Iran, North Korea, Russia, or a designated country; or<br>(B) headquartered in China, Iran, North Korea, Russia, or a designated country.<br>(b) The prohibition described by Subsection (a) applies regardless of whether:<br>(1) the company's or its parent company's securities are publicly traded; or<br>(2) the company or its parent company is listed on a public stock exchange as:<br>(A) a Chinese, Iranian, North Korean, or Russian company; or<br>(B) a company of a designated country. | | |
| None | Mandatory standards and policies relating to energy efficiency which are contained in the state energy conservation plan issued in compliance with the Energy Policy and Conservation Act. | 42 U.S.C. 6201 | Contractor RFP/IFB<br>Subrecipients |
| None | The Firm agrees that no otherwise qualified individual with disabilities shall, solely by reason of his/her disability, be denied the benefits of, or be subjected to discrimination, including discrimination in employment, under any program or activity receiving federal financial assistance. | Section 504 of the Rehabilitation Act of 1973, as amended. | Subrecipients |
| | **ARPA Terms & Conditions** | | |
| ARPA Terms, Conditions, & Records | 1. Use of Funds.<br>a. Recipient understands and agrees that the funds disbursed under this award may only be used in compliance with section 603(c) of the Social Security Act (the Act), Treasury's regulations implementing that section, and guidance issued by Treasury regarding the foregoing.<br>b. Recipient will determine prior to engaging in any project using this assistance that it has the institutional, managerial, and financial capability to ensure proper planning, management, and completion of such project. | Section 9901 of the American Rescue Plan Act, Pub. L. No. 117-2;<br>Section 602(b), 603(b) and/or 603(c) as applicable | Subrecipients |
| ARPA Terms, Conditions, & Records | 2. Period of Performance. The period of performance for this award begins on the date hereof and ends on December 31, 2026. As set forth in Treasury's implementing regulations, Recipients may use award funds to cover eligible costs incurred during the period that begins on March 3, 2021, and ends on December 31, 2024. | Section 9901 of the American Rescue Plan Act, Pub. L. No. 117-2;<br>Section 602(b), 603(b) and/or 603(c) as applicable | Subrecipients |
| ARPA Terms, Conditions, & Records | 3. Reporting. Recipient agrees to comply with any reporting obligations established by Treasury as they relate to this award. | Section 9901 of the American Rescue Plan Act, Pub. L. No. 117-2;<br>Section 602(b), 603(b) and/or 603(c) as applicable | Subrecipients |

| THRESHOLD | PROVISION | CITATION | PROVISION APPLIES TO |
|---|---|---|---|
| ARPA Terms, Conditions, & Records | 4. Maintenance of and Access to Records<br>a. Recipient shall maintain records and financial documents sufficient to evidence compliance with section 603(c) of the Act, Treasury's regulations implementing that section, and guidance issued by Treasury regarding the foregoing.<br>b. The Treasury Office of Inspector General and the Government Accountability Office, or their authorized representatives, shall have the right of access to records (electronic and otherwise) of Recipient in order to conduct audits or other investigations.<br>c. Records shall be maintained by Recipient for a period of five (5) years after all funds have been expended or returned to Treasury, whichever is later. | Section 9901 of the American Rescue Plan Act, Pub. L. No. 117-2;<br>Section 602(b), 603(b) and/or 603(c) as applicable | Contractor RFP/IFB<br>Contractor RFQ<br>Subrecipients<br>Vendors |
| ARPA Terms, Conditions, & Records | 5. Pre-award Costs. Pre-award costs, as defined in 2 CFR § 200.458, may not be paid with funding from this award. | Section 9901 of the American Rescue Plan Act, Pub. L. No. 117-2;<br>Section 602(b), 603(b) and/or 603(c) as applicable | Subrecipients |
| ARPA Terms, Conditions, & Records | 6. Administrative Costs. Recipient may use funds provided under this award to cover both direct and indirect costs. | Section 9901 of the American Rescue Plan Act, Pub. L. No. 117-2;<br>Section 602(b), 603(b) and/or 603(c) as applicable | Subrecipients |
| ARPA Terms, Conditions, & Records | 7. Cost Sharing. Cost sharing or matching funds are not required to be provided by Recipient. | Section 9901 of the American Rescue Plan Act, Pub. L. No. 117-2;<br>Section 602(b), 603(b) and/or 603(c) as applicable | Subrecipients |
| ARPA Terms, Conditions, & Records | 8. Conflicts of Interest. Recipient understands and agrees it must maintain a conflict of interest policy consistent with 2 CFR § 200.318(c) and that such conflict of interest policy is applicable to each activity funded under this award. Recipient and subrecipients must disclose in writing to Treasury or the pass-through entity, as appropriate, any potential conflict of interest affecting the awarded funds in accordance with 2 CFR § 200.112. | Section 9901 of the American Rescue Plan Act, Pub. L. No. 117-2;<br>Section 602(b), 603(b) and/or 603(c) as applicable | Contractor RFP/IFB<br>Contractor RFQ<br>Subrecipients<br>Vendors |
| ARPA Terms, Conditions, & Records | 9. Compliance with Applicable Law and Regulations.<br>a. Recipient agrees to comply with the requirements of section 603 of the Act, regulations adopted by Treasury pursuant to section 603(f) of the Act, and guidance issued by Treasury regarding the foregoing. Recipient also agrees to comply with all other applicable federal statutes, regulations, and executive orders, and Recipient shall provide for such compliance by other parties in any agreements it enters into with other parties relating to this award.<br>b. Federal regulations applicable to this award include, without limitation, the following:<br>i. Uniform Administrative Requirements, Cost Principles, and Audit Requirements for Federal Awards, 2 CFR Part 200, other than such provisions as Treasury may determine are inapplicable to this Award and subject to such exceptions as may be otherwise provided by Treasury. Subpart F – Audit Requirements of the Uniform Guidance, implementing the Single Audit Act, shall apply to this award.<br>ii. Universal Identifier and System for Award Management (SAM), 2 CFR Part 25, pursuant to which the award term set forth in Appendix A to 2 CFR Part 25 is hereby incorporated by reference. | Section 9901 of the American Rescue Plan Act, Pub. L. No. 117-2;<br>Section 602(b), 603(b) and/or 603(c) as applicable | Contractor RFP/IFB<br>Contractor RFQ<br>Subrecipients<br>Vendors |

| THRESHOLD | PROVISION | CITATION | PROVISION APPLIES TO |
|---|---|---|---|
| | iii. Reporting Subaward and Executive Compensation Information, 2 CFR Part 170, pursuant to which the award term set forth in Appendix A to 2 CFR Part 170 is hereby incorporated by reference.<br>iv. OMB Guidelines to Agencies on Governmentwide Debarment and Suspension (Non-procurement), 2 CFR Part 180, including the requirement to include a term or condition in all lower tier covered transactions (contracts and subcontracts described in 2 CFR Part 180, subpart B) that the award is subject to 2 CFR Part 180 and Treasury's implementing regulation at 31 CFR Part 19.<br>v. Recipient Integrity and Performance Matters, pursuant to which the award term set forth in 2 CFR Part 200, Appendix XII to Part 200 is hereby incorporated by reference.<br>vi. Governmentwide Requirements for Drug-Free Workplace, 31 CFR Part 20. (Subrecipient Only)<br>vii. New Restrictions on Lobbying, 31 CFR Part 21.<br>viii. Uniform Relocation Assistance and Real Property Acquisitions Act of 1970 (42 U.S.C. §§ 4601-4655) and implementing regulations.<br>ix. Generally applicable federal environmental laws and regulations.<br><br>c. Statutes and regulations prohibiting discrimination applicable to this award include, without limitation, the following:<br>i. Title VI of the Civil Rights Act of 1964 (42 U.S.C. §§ 2000d et seq.) and Treasury's implementing regulations at 31 CFR Part 22, which prohibit discrimination on the basis of race, color, or national origin under programs or activities receiving federal financial assistance;<br>ii. The Fair Housing Act, Title VIII of the Civil Rights Act of 1968 (42 U.S.C. §§ 3601 et seq.), which prohibits discrimination in housing on the basis of race, color, religion, national origin, sex, familial status, or disability;<br>iii. Section 504 of the Rehabilitation Act of 1973, as amended (29 U.S.C. § 794), which prohibits discrimination on the basis of disability under any program or activity receiving federal financial assistance;<br>iv. The Age Discrimination Act of 1975, as amended (42 U.S.C. §§ 6101 et seq.), and Treasury's implementing regulations at 31 CFR Part 23, which prohibit discrimination on the basis of age in programs or activities receiving federal financial assistance; and<br>v. Title II of the Americans with Disabilities Act of 1990, as amended (42 U.S.C. §§ 12101 et seq.), which prohibits discrimination on the basis of disability under programs, activities, and services provided or made available by state and local governments or instrumentalities or agencies thereto. | | |
| ARPA Terms, Conditions, & Records | 10. Remedial Actions. In the event of Recipient's noncompliance with section 603 of the Act, other applicable laws, Treasury's implementing regulations, guidance, or any reporting or other program requirements, Treasury may impose additional conditions on the receipt of a subsequent tranche of future award funds, if any, or take other available remedies as set forth in 2 CFR § 200.339. In the case of a violation of section 603(c) of the Act regarding the use of funds, previous payments shall be subject to recoupment as provided in section 603(e) of the Act. | Section 9901 of the American Rescue Plan Act, Pub. L. No. 117-2;<br>Section 602(b), 603(b) and/or 603(c) as applicable | Subrecipients |
| ARPA Terms, Conditions, & Records | 11. Hatch Act. Recipient agrees to comply, as applicable, with requirements of the Hatch Act (5 U.S.C. §§ 1501-1508 and 7324-7328), which limit certain political activities of State or local government employees whose principal employment is in connection with an activity financed in whole or in part by this federal assistance. | Section 9901 of the American Rescue Plan Act, Pub. L. No. 117-2;<br>Section 602(b), 603(b) and/or 603(c) as applicable | Subrecipients |
| ARPA Terms, Conditions, & Records | 12. False Statements. Recipient understands that making false statements or claims in connection with this award is a violation of federal law and may result in criminal, civil, or administrative sanctions, including fines, imprisonment, civil damages and penalties, debarment from participating in federal awards or contracts, and/or any | Section 9901 of the American Rescue Plan Act, Pub. L. No. 117-2;<br>Section 602(b), | Contractor RFP/IFB<br>Contractor RFQ<br>Subrecipients<br>Vendors |

| THRESHOLD | PROVISION | CITATION | PROVISION APPLIES TO |
|---|---|---|---|
| | other remedy available by law. | 603(b) and/or 603(c) as applicable | |
| ARPA Terms, Conditions, & Records | 13. Publications. Any publications produced with funds from this award must display the following language: "This project [is being] [was] supported, in whole or in part, by federal award number [enter project FAIN] awarded to [name of Recipient] by the U.S. Department of the Treasury." | Section 9901 of the American Rescue Plan Act, Pub. L. No. 117-2; Section 602(b), 603(b) and/or 603(c) as applicable | Subrecipients |
| ARPA Terms, Conditions, & Records | 14. Debts Owed the Federal Government.<br>a. Any funds paid to Recipient (1) in excess of the amount to which Recipient is finally determined to be authorized to retain under the terms of this award; (2) that are determined by the Treasury Office of Inspector General to have been misused; or (3) that are determined by Treasury to be subject to a repayment obligation pursuant to section 603(e) of the Act and have not been repaid by Recipient shall constitute a debt to the federal government.<br>b. Any debts determined to be owed the federal government must be paid promptly by Recipient. A debt is delinquent if it has not been paid by the date specified in Treasury's initial written demand for payment, unless other satisfactory arrangements have been made or if the Recipient knowingly or improperly retains funds that are a debt as defined in paragraph 14(a). Treasury will take any actions available to it to collect such a debt. | Section 9901 of the American Rescue Plan Act, Pub. L. No. 117-2; Section 602(b), 603(b) and/or 603(c) as applicable | Subrecipients |
| ARPA Terms, Conditions, & Records | 15. Disclaimer.<br>a. The United States expressly disclaims any and all responsibility or liability to Recipient or third persons for the actions of Recipient or third persons resulting in death, bodily injury, property damages, or any other losses resulting in any way from the performance of this award or any other losses resulting in any way from the performance of this award or any contract, or subcontract under this award.<br>b. The acceptance of this award by Recipient does not in any way establish an agency relationship between the United States and Recipient. | Section 9901 of the American Rescue Plan Act, Pub. L. No. 117-2; Section 602(b), 603(b) and/or 603(c) as applicable | Subrecipients |
| ARPA Terms, Conditions, & Records | 16. Protections for Whistleblowers.<br>c. In accordance with 41 U.S.C. § 4712, Recipient may not discharge, demote, or otherwise discriminate against an employee in reprisal for disclosing to any of the list of persons or entities provided below, information that the employee reasonably believes is evidence of gross mismanagement of a federal contract or grant, a gross waste of federal funds, an abuse of authority relating to a federal contract or grant, a substantial and specific danger to public health or safety, or a violation of law, rule, or regulation related to a federal contract (including the competition for or negotiation of a contract) or grant.<br>d. The list of persons and entities referenced in the paragraph above includes the following:<br>i. A member of Congress or a representative of a committee of Congress;<br>ii. An Inspector General;<br>iii. The Government Accountability Office;<br>iv. A Treasury employee responsible for contract or grant oversight or management;<br>v. An authorized official of the Department of Justice or other law enforcement agency;<br>vi. A court or grand jury; or<br>vii. A management official or other employee of Recipient, contractor, or subcontractor who has the responsibility to investigate, discover, or address misconduct.<br>c. Recipient shall inform its employees in writing of the rights and remedies provided | Section 9901 of the American Rescue Plan Act, Pub. L. No. 117-2; Section 602(b), 603(b) and/or 603(c) as applicable | Contractor RFP/IFB<br>Contractor RFQ<br>Subrecipients<br>Vendors |

| THRESHOLD | PROVISION | CITATION | PROVISION APPLIES TO |
|---|---|---|---|
| | under this section, in the predominant native language of the workforce. | | |
| ARPA Terms, Conditions, & Records | 17. Increasing Seat Belt Use in the United States. Pursuant to Executive Order 13043, 62 FR 19217 (Apr. 18, 1997), Recipient should encourage its contractors to adopt and enforce on-the-job seat belt policies and programs for their employees when operating company-owned, rented or personally owned vehicles. | Section 9901 of the American Rescue Plan Act, Pub. L. No. 117-2; Section 602(b), 603(b) and/or 603(c) as applicable | Contractor RFP/IFB Contractor RFQ Subrecipients Vendors |
| ARPA Terms, Conditions, & Records | 18. Reducing Text Messaging While Driving. Pursuant to Executive Order 13513, 74 FR 51225 (Oct. 6, 2009), Recipient should encourage its employees, subrecipients, and contractors to adopt and enforce policies that ban text messaging while driving, and Recipient should establish workplace safety policies to decrease accidents caused by distracted drivers | Section 9901 of the American Rescue Plan Act, Pub. L. No. 117-2; Section 602(b), 603(b) and/or 603(c) as applicable | Contractor RFP/IFB Contractor RFQ Subrecipients Vendors |

## Exhibit C – Other Related Information

To be inserted

## Exhibit D – Insurance Certificate

To be inserted

## Exhibit E – Bid, Performance, and Payment Bonds

To be inserted

## Exhibit F – Eligibility Verification (SAM.gov)

Vendor to provide a dated printout of their active status without exclusions from SAM.gov website

## Exhibit G – Certificate of Interested Parties (Form 1295)

Form 1295 (Certificate of Interested Parties) must be completed on the Texas Ethics Commission's website as part of this project prior to contract execution. Form 1295 can be accessed here: https://www.ethics.state.tx.us/filinginfo/1295/ and must be returned with the certification number assigned after completion

MUSTANG CAT

# New Machine Sales Agreement

MUSTANG CAT Rental

REF# Q-20812

MUSTANG MACHINERY COMPANY, LLC. D/B/A MUSTANG CAT, 12800 NORTHWEST FREEWAY, HOUSTON TX 77040 | PHONE: (800) 256 - 1001

| | | | | |
|---|---|---|---|---|
| SOLD TO | CUSTOMER | City Of La Marque | SHIP TO | |
| | STREET ADDRESS | 1111 Bayou | | |
| | CITY/STATE | La Marque/TX | | / |
| | POSTAL CODE | 77568 | | |
| | COUNTY/ COUNTRY | | | |
| | PHONE NUMBER | 409-938-9295 | | |
| | EMAIL | a.hobby@cityoflamarque.org | | |
| | CUSTOMER CONTACT | EQUIPMENT Amanda Hobby | F.O.B. AT: | |
| | | PRODUCT SUPPORT | | |
| | INDUSTRY CODE | | SHIP VIA: | |
| | PRINCIPAL WORK CODE | | | |

| | | | |
|---|---|---|---|
| CUSTOMER NUMBER: 0477550 | SALES TAX EXEMPTION NUMBER (IF APPLICABLE): | | CUSTOMER PO NUMBER: | |

**DESCRIPTION OF EQUIPMENT ORDERED / PURCHASED**

| | | | | | |
|---|---|---|---|---|---|
| MAKE: | Caterpillar | MODEL: | 303.5-07CA | YEAR: | 2024 |
| ID NUMBER: | 24NE0979 | SERIAL NUMBER: | 0RE905329 | SMU: | 0 |

| | | |
|---|---|---|
| 303.5 | 303.5-07CA | |
| 24NE0979 | 24NE0979 | $90,300.00 |
| 303.5 07A CR HYD EXCAVATOR | 558-1751 | $0.00 |
| SEAT, SUSPENSION, FABRIC | 519-9265 | $0.00 |
| LIGHTS, LED, FRONT&REAR | 521-9512 | $0.00 |
| CAT KEY, WITH PASS CODE OPTION | 525-4465 | $0.00 |
| FILM, PRODUCT LINK, ANSI | 541-4787 | $0.00 |
| 2 WAY CONTROL | 542-1495 | $0.00 |
| FILM, INC. CANADA | 542-1504 | $0.00 |
| BOOM LIGHT, LED | 542-8886 | $0.00 |
| HYDRAULIC OIL, STD | 546-1520 | $0.00 |
| SOFTWARE, PROPORTIONAL CONTROL | 557-1709 | $0.00 |
| SOFTWARE, STICK STEER CONTROL | 557-1710 | $0.00 |
| SOFTWARE, CODED START | 557-1713 | $0.00 |
| ALARM, TRAVEL | 558-1744 | $0.00 |
| BOOM, STANDARD | 558-1754 | $0.00 |
| LINES, BOOM W/O BLCV | 558-1760 | $0.00 |
| LINES, STICK W/O SLCV | 558-1763 | $0.00 |
| CAB, WITH HEAT AND A/C | 558-1770 | $0.00 |
| TRACK, 12", RUBBER | 566-2914 | $0.00 |
| BLADE, ANGLE, BOCE | 568-5199 | $0.00 |
| TRAVEL LEVERS AND PEDALS | 568-5200 | $0.00 |
| INSTRUCTIONS, ANSI | 569-3572 | $0.00 |
| LINKAGE, BUCKET, W/LIFTING EYE | 571-9088 | $0.00 |
| STICK, LONG, W/ THUMB BRACKET | 571-9661 | $0.00 |
| UNDERCARRIAGE,FIXED,ANGLE BLD | 571-9665 | $0.00 |
| DRAIN, ECOLOGY | 573-4364 | $0.00 |
| LINES, BUCKET, LONG STICK | 575-2776 | $0.00 |
| CONTROL, 1ST AUX, JOYSTICK | 575-4420 | $0.00 |
| LINES, 1ST AUX, LONG STICK | 575-7225 | $0.00 |
| ENGINE, EPA TIER 4F | 576-2961 | $0.00 |
| FILM, CAB A/C | 578-0230 | $0.00 |
| ACCUMULATOR | 588-2227 | $0.00 |
| CWT EXTRA, 550LBS | 592-1442 | $0.00 |
| MONITOR NEXT GEN, CAMERA READY | 592-5475 | $0.00 |
| FLOORMAT, CAB, W/TRAVEL | 594-7890 | $0.00 |
| FILM, ROPS, ISO | 595-3179 | $0.00 |
| SEAT BELT, 3" RETRACTABLE | 599-7202 | $0.00 |
| CAMERA, CAB | 601-9418 | $0.00 |
| LANE 3 ORDER 0 NC | 0P-9003 | $0.00 |
| SERIALIZED TECHNICAL MEDIA KIT | 421-8926 | $274.00 |
| SHIPPING/STORAGE PROTECTION 0 | 0P-2266 | $0.00 |
| PACKING, LAST MILE PROGRAM 0 NC | 0P-4299 | $0.00 |
| PRODUCT LINK, CELLULAR PL243 | 573-9631 | $535.00 |
| INTEGRATED RADIO | 521-9517 | $1,437.50 |
| 303 24 BKT | 24NE2236 | |

**Total Machine List Price: $92,546.50**

| | |
|---|---|
| Dealer Discount: | $31,048.06 |

| Non-Discounted Items: | |
|---|---|
| Make Ready | $485.00 |
| Freight Charges | $650.00 |
| Warranty | $0.00 |
| Miscellaneous | $0.00 |

Quote Notes

**Sourcewell Contract #011723-CAT. COI. Quote valid 90 days.**

**TRADE-IN EQUIPMENT**

| | | | | | |
|---|---|---|---|---|---|
| MODEL: | | YEAR: | | SERIAL NUMBER: | |
| PAYOUT TO: | | AMOUNT: | $0.00 | PAID BY: | |
| MODEL: | | YEAR: | | SERIAL NUMBER: | |
| PAYOUT TO: | | AMOUNT: | | PAID BY: | |
| MODEL: | | YEAR: | | SERIAL NUMBER: | |
| PAYOUT TO: | | AMOUNT: | | PAID BY: | |

ALL TRADE-INS ARE SUBJECT TO EQUIPMENT BEING IN "AS INSPECTED CONDITION" BY MUSTANG CAT AT TIME OF DELIVERY. CUSTOMER HEREBY STATES THE ABOVE LISTED EQUIPMENT EMISSIONS HAVE NOT BEEN ALTERED OR CHANGED. CUSTOMER HEREBY SELLS THE TRADE-IN EQUIPMENT DESCRIBED ABOVE TO MUSTANG CAT AND WARRANTS IT TO BE FREE AND CLEAR OF ALL CLAIMS, LIENS. MORTGAGES AND SECURITY INTEREST EXCEPT AS SHOWN ABOVE.

**PREVENTATIVE MAINTENANCE AGREEMENT**

CVA|500 Hours|

**EQUIPMENT WARRANTY**

**Customer acknowledges that he has received a copy of the manufacturer's warranty and has read and understood said warranty. All used equipment is sold as is where is and no warranty is offered or implied except as specified herein.**

**TERMS OF SALE**

| | |
|---|---|
| **SUB TOTAL** | $62,633.44 |
| HEAVY EQUIPMENT TAX | $0.00 |
| SALES TAX | $0.00 |
| DOC FEE | $0.00 |
| DIESEL SURCHARGE | $0.00 |
| **TOTAL CASH PRICE** | $62,633.44 |
| CASH WITH ORDER | $0.00 |
| TRADE IN ALLOWANCE | $0.00 |
| TOTAL DOWN PMT. & TRADE IN ALLOWANCE | - |
| UNPAID BALANCE OF TRADES | $0.00 |
| **Invoice – Downpayment + Trade in Allowance** | $62,63344 |
| **TOTAL AMOUNT TO BE FINANCED** | $62,633.44 |

**WARRANTY TERM** 24 Month | 2000 Hours|Premier|Labor+Travel 2H/100M
CAT Work Tools Warranty 12 Months/Unlimited Hours

**CUSTOMER INITIAL.**

HERE

**IT IS MUSTANG CAT's INTENT THAT THIS AGREEMENT REFLECTS THE FULL AND FINAL TERMS OF THIS TRANSACTION. HOWEVER, DUE TO CHANGING CIRCUMSTANCES, MUSTANG CAT MAY NOT BE ABLE TO HONOR THE EXACT PRICING OR DELIVERY DATES HEREIN. EXAMPLES OF THOSE CIRCUMSTANCES INCLUDE, BUT ARE NOT LIMITED TO, LIMITED PRODUCT AVAILABILITY, EXTENDED LEAD TIMES, AND SUPPLIER PRICING CHANGES. CUSTOMER ACCEPTS AND ACKNOWLEDGES THAT IF MUSTANG CAT IS NOT ABLE TO HONOR THE TERMS OF THIS AGREEMENT, THIS AGREEMENT WILL BE VOIDED, AND BOTH PARTIES RELEASED FROM THIS AGREEMENT'S BINDING EFFECT. VOIDING OF THIS AGREEMENT DOES NOT PREVENT THE PARTIES FROM ENTERING INTO A NEW AGREEMENT, NOR IMPACT OTHER AGREEMENTS AMONG THE PARTIES HERETO.**

**DISCLAIMER OF WARRANTIES AND WAIVER OF CLAIMS**

MUSTANG CAT IS NOT A MANUFACTURER OF THE EQUIPMENT. ALTHOUGH MUSTANG CAT MAY ADMINISTER WARRANTIES ISSUED BY THE MANUFACTURER, CUSTOMER ACKNOWLEDGES AND AGREES THAT: (1) ANY EXPRESS WARRANTIES BY THE MANUFACTURER FOR THE EQUIPMENT ARE NOT THE RESPONSIBILITY OF MUSTANG CAT; AND (2) THE MANUFACTURER'S WARRANTY CONTAINS LIMITATIONS AND CUSTOMER MAY INCUR CERTAIN REPAIR, TRANSPORTATION, OR OTHER CHARGES BY MUSTANG CAT WHICH ARE NOT COVERED BY THE MANUFACTURER'S WARRANTY. ANY AND ALL IMPLIED WARRANTIES ARE EXCLUDED.

MUSTANG CAT, BY VIRTUE OF HAVING SOLD THE EQUIPMENT UNDER THIS AGREEMENT, HAS NOT MADE AND DOES NOT MAKE ANY REPRESENTATION OR WARRANTY, EXPRESS OR IMPLIED, AS TO CONDITION, COMPLIANCE WITH SPECIFICATIONS OR REGULATIONS, QUALITY, DURABILITY, SUITABILITY, MERCHANTABILITY, FITNESS FOR USE OR FITNESS FOR A PARTICULAR PURPOSE, OR ANY OTHER WARRANTY WHATSOEVER, EXPRESS OR IMPLIED, WITH RESPECT TO THE EQUIPMENT. MUSTANG CAT IS NOT LIABLE FOR ANY DAMAGES (WHETHER ORDINARY, SPECIAL OR PUNITIVE) ARISING FROM ANY FAILURE OF THE EQUIPMENT TO OPERATE OR THE FAULTY OPERATION OF THE EQUIPMENT, OR THE INSTALLATION, OPERATION, REPAIR OR USE OF THE EQUIPMENT.

**OTHER TERMS AND CONDITIONS**

ADDITIONAL TERMS AND CONDITIONS SET FORTH ON THE REVERSE SIDE HEREOF OR ATTACHED HERETO (AS APPLICABLE) CONSTITUTE AN IMPORTANT PART OF THIS AGREEMENT AND ARE INCORPORATED HEREIN VERBATIM FOR ALL PURPOSES. PLEASE REVIEW SUCH OTHER TERMS AND CONDITIONS BEFORE SIGNING THIS AGREEMENT.

THESE TERMS AND CONDITIONS SUPERSEDE ALL OTHER TERMS AND CONDITIONS PRESENTED BY OR TO CUSTOMER UNLESS PROVIDED IN A DOCUMENT SIGNED BY AN AUTHORIZED REPRESENTATIVE OF BOTH PARTIES AND CONTAINING REFERENCE TO THIS SALES ORDER AGREEMENT.

**THIS AGREEMENT IS SUBJECT TO THE TERMS AND CONDITIONS ATTACHED**

DATE _____ DATE _____

ORDER RECEIVED BY Stuart Newton CUSTOMER NAME _____

SIGNATURE _____ CUSTOMER SIGNATURE _____

TITLE OSR

TITLE

## TERMS AND CONDITIONS

**1. DEFINITION OF MUSTANG:** MUSTANG and Seller are defined as Mustang Machinery Company, LLC. d/b/a MUSTANG CAT, Mustang Rental Services of Texas, LLC. d/b/a MUSTANG RENTAL SERVICES, and their subsidiaries, affiliates and related entities.

**2. AGREEMENT:** This Agreement becomes binding on MUSTANG CAT only upon MUSTANG CAT's execution of this Agreement, and subject to the availability of the equipment from the manufacturer. Customer shall inspect the equipment immediately upon its receipt, and shall be conclusively deemed to have accepted the equipment in good and operating condition unless the customer promptly notifies MUSTANG CAT of any defects, in writing and via telephone. MUSTANG CAT shall have the right, at its option, to either repair or replace the equipment, or terminate this Agreement, in which event the equipment shall be returned to MUSTANG CAT. Delays in delivery shall be excused if caused by any cause beyond the reasonable control of MUSTANG CAT.

**3. TITLE TO EQUIPMENT:** Title to the equipment shall pass to the customer only upon MUSTANG CAT's actual receipt of funds in the total amount of the Purchase Price and other sums due to MUSTANG CAT hereunder.

**4. TAKEN IN TRADE:** Customer does hereby irrevocably sell, assign, transfer and convey possession, ownership and title unto MUSTNAG CAT to the Trade-in Equipment described above. Customer warrants that it is the sole owner of the Trade-in Equipment, has full power and authority to sell the Trade-in Equipment, and that there is no lien or any encumbrance of any kind or nature against the Trade-in Equipment, of record or otherwise.

**5. TAXES:** Customer shall promptly pay all taxes, fees, transportation and other costs, assessments and all governmental charges of any kind or character, and any penalties, fines or interest thereon relating to the equipment.

**6. CUSTOMER'S WARRANTIES AND USE:** In addition to the other warranties contained herein, customer warrants that (i) if customer is an entity, it is duly organized and validly existing in good standing, and (ii) is duly authorized to execute, deliver, and perform under this Agreement. Customer further agrees and warrants, at its cost, that: (1) the equipment shall at all times be used solely for customer's business and not for personal, family, or household use, and in accordance with the use, and/or instructional materials, solely for the purpose for which it was intended; (2) only customer's employees (who must be skilled, trained and certified to do so) shall use the equipment. Customer hereby further agrees and warrants that (i) any payments made pursuant to this Agreement are intended by the customer to be a contemporaneous exchange for new value given to customer and it is a substantially contemporaneous exchange and (ii) each payment made of a debt incurred by customer under this Agreement is in the ordinary course of business or financial affairs of customer and MUSTANG CAT, and such payment was made in the ordinary course of business or financial affairs of customer and MUSTANG CAT, or made according to ordinary business terms.

**7.SOLE AND EXCLUSIVE REMEDY:** Customer further agrees that his SOLE AND EXCLUSIVE remedy, if any, against MUSTANG CAT, shall be as contained in any express, written warranty applicable hereto. Customer acknowledges that he has received, read, understands and accepts the terms contained herein. The customer agrees that no other remedy (including, but not limited to, claims for INCIDENTAL, CONSEQUENTIAL OR SPECIAL DAMAGES, OR ANY CAUSE, LOSS, ACTION, CLAIM OR DAMAGE WHATSOEVER OR INJURY TO PERSON OR PROPERTY OR ANY OTHER CONSEQUENTIAL, ECONOMIC OR INCIDENTAL LOSS) shall be available to him.

**8. LOSS AND DAMAGE:** Customer assumes all liability and risk of, and shall be solely responsible for, all damage and loss to the equipment from any cause whatsoever, whether or not such loss or damage is or could have been covered by insurance. Until the equipment is paid in full, Customer shall promptly give MUSTANG CAT written notice of any loss or damage and reimburse MUSTANG CAT for the value of the equipment if damaged or stolen. MUSTANG CAT's sole responsibility for shipments shall be to deliver the equipment to a public carrier company.

**9. SECURITY AGREEMENT:** Unless the product(s) is paid for in full in cash at the time of delivery, MUSTANG CAT retains and customer hereby grants to MUSTANG CAT a security interest in such product(s) within the meaning of the Uniform Commercial Code together with all and any substitutions, additions, or accessions to such product(s), and in any and all proceeds from the sale, exchange or disposal thereof to secure payment of the purchase price of such product(s). Customer, prior to or after delivery, specifically agrees to enter into and execute a financing statement, or statements, and an additional security agreement setting forth the terms and conditions of the Agreement between the parties in relation to the security interest of MUSTANG CAT. Customer further appoints MUSTANG CAT as its attorney-in-fact to execute any such financing statement or security agreement in the place and stead of customer. In the event customer fails to execute any such financing statement or security agreement upon request by MUSTANG CAT, the entire balance of the purchase price shall be at MUSTANG CAT's option become due and payable and customer shall execute any notes or other evidences of indebtedness that may be required by MUSTANG CAT. However, any note taken herewith shall be evidence of customer's obligation to pay the unpaid time balance only and is not to be considered or construed to be payment for the product(s).

**10. EVENTS OF DEFAULT:** The following are events of default by Customer: (1) failure to pay any amount due hereunder or otherwise; (2) Customer's ceasing to do business, becoming insolvent, taking advantage of any law for the relief of debtors or filing bankruptcy, making an assignment for the benefit of creditors; (3) when MUSTANG CAT deems itself insecure with respect to customer's performance; (4) Customer fails to perform any of customer's other obligation hereunder or otherwise; (5) Customer's representation or warranty is false or misleading.

**11. REMEDIES ON DEFAULT:** In the event of any default by customer, MUSTNAG CAT is entitled to any one or more of the following remedies, without any notice of default: (a) take possession of the equipment or any other equipment, including enter premises where its located; (b) terminate this Agreement; (c) seek specific performance or injunction or recover damages; (d) stop delivery of the equipment or any other equipment; (e) surrender any insurance policies and receive the unearned premiums; (f) without terminating this Agreement, MUSTANG CAT may take possession of the equipment and sell, relet or otherwise dispose of the equipment as a secured party under UCC and deduct all expenses, costs, reasonable attorneys fees, and other charges incurred by MUSTANG CAT; (g) recover deficiency from customer; and/or (h) perform by itself, or cause performance of, customer's obligation, at customer's cost. In no event shall MUSTANG CAT be required to sell or relet the equipment, nor required to rebate or pay back any gain or profit as a result of leasing the equipment. MUSTANG CAT's remedies hereunder shall not be exclusive, but shall be cumulative and in addition to all other remedies existing at law or in equity.

**12. COLLECTIONS:** In the event any action either to collect payment or enforce the terms and provisions of this agreement becomes necessary, CUSTOMER agrees to pay reasonable cost of collection and attorney's fees to MUSTIANG CAT should this matter be placed in the hands of a collection agency or an attorney for collection.

**13. INDEMNITY: CUSTOMER AGREES TO INDEMNIFY, DEFEND AND HOLD HARMLESS MUSTANG CAT AND MUSTANG CAT's PARTNERS, EMPLOYEES, AGENTS, REPRESENATIVES, SUCCESSORS AND ASSIGNS FROM ANY AND ALL CLAIM, EXPENSE, CAUSE OF ACTION, DAMAGE, LIABILITY, COST, PENALTY, TAX, ASSESSMENT, CHARGE, PUNITIVE DAMAGE OR EXPENSE BY REASON OF ANY ACT OR OMISSION OF CUSTOMER OR ITS EMPLOYEES, AGENTS, CONTRACTORS, SUBCONTRACTORS, AFFILIATES OR INVITEES, WHILE THE EQUIPMENT IS IN THE POSSESSION OR UNDER THE CONTROL OF THE CUSTOMER OR ITS AGENTS.**

**14. INSURANCE COVERAGES:** Customer shall maintain Equipment insurance and General Liability insurance, Auto Liability insurance, and Workers Compensation and Employer's Liability Insurance, each with minimum $1,000,000 per occurrence and shall deliver to MUSTANG CAT a Certificate of Insurance evidencing same. Such insurance obtained by customer shall be primary.

**15. NOTICES:** All notices hereunder shall be in writing and shall be deemed delivered if delivered personally or mailed, by certified mail, return receipt requested, to the respective addresses of the parties set forth above or any other address designated by written notice. By signing this Agreement, customer represents that it has read and agrees to the Terms and Conditions applicable to communications made by MUSTANG CAT to customer by Text or Email and which are found at https://www.mustangcat.com/legal-notices/

**16. MISCELLANEOUS:** This Agreement may only be modified by a written agreement signed by MUSTANG CAT. If any provision of this Agreement is hereafter held invalid or unenforceable, the remainder of the Agreement shall not be affected and the provisions are declared severable. If there is more than one customer, the obligations of customers hereunder are joint and several. Subject to the terms hereof, this Agreement shall be binding upon and inure to the benefit of MUSTANG CAT and customer and their respective personal representatives, successors and assigns. This Agreement shall be governed by the laws of Texas, each party hereby irrevocably consents to submit to the exclusive jurisdiction of the courts of the state of Texas in Harris County, Texas. I agree and acknowledge that to the extent equipment is equipped with a telematics system (e.g., Product Link), that data concerning such equipment, including condition, and operation are being transmitted to Caterpillar Inc., and its affiliates. The full privacy statement applicable to the transfer of telematics information, including instructions on how to ask questions about telematics and how to revoke your consent, is available at: https://www.caterpillar.com/en/legal-notices/data-governance-statement.html. **THE PARTIES HEREBY WAIVE THEIR RIGHT TO A JURY TRIAL OF ANY CLAIM OR CAUSE OF ACTION ARISING OUT OF THIS AGREEMENT OR THE SUBJECT MATTER HEREOF.**

## Entity Information

MUSTANG MACHINERY COMPANY, LLC Active Registration

Unique Entity ID
**GLNGTNV1LRP6**

Your registration was activated on 2024-04-15. It expires on 2025-04-11, which is one year after you submitted it for processing. To update or renew your registration, begin from your Entities Workspace.

## More About the Entity Status Tracker

**Getting Started with Registration**

**Entity Status Guide**

**Legend**

**What if my entity fails TIN validation?**

**What if my entity fails CAGE validation?**

**More Help**



**Validate Entity**
Completed



**Get Unique Entity ID**
Completed



**Core Data**
Completed



**Assertions**
Completed



**Reps & Certs**
Completed



**POCs**
Completed



**Submit**
Completed



**Processing**
Completed



**Active**
Completed

https://sam.gov/content/status-tracker

Blue Cross and Blue S... | Daily Treasury Yield Cu... | Dayforce HCM | Ernst & Young Accou... | Financial Ratios | http--www.irs.gov-pu... | Login to Netbenefits | Precious Accents Disc ... | Premium Aluminum ... | Pricewat

# Entity Information

MUSTANG MACHINERY COMPANY, LLC ● Active Registration

Unique Entity ID
**GLNGTNV1LRP6**

Your registration was activated on 2024-04-15. It expires on 2025-04-11, which is one year after you submitted it for processing. To update or renew your registration, begin from your Entities Workspace.

| Validate Entity | Get Unique Entity ID | Core Data | Assertions | Reps & Certs | POCs | Submit | Processing | Active |
|---|---|---|---|---|---|---|---|---|
| Completed | Completed | Completed | Completed | Completed | Completed | Completed | Completed | Completed |

Feedback




⚠ **WARNING**

This is a U.S. General Services Administration Federal Government computer system that is **"FOR OFFICIAL USE ONLY."** This system is subject to monitoring. Individuals found performing unauthorized activities are subject to disciplinary action including criminal prosecution.

This system contains Controlled Unclassified Information (CUI). All individuals viewing, reproducing or disposing of this information are required to protect it in accordance with 32 CFR Part 2002 and GSA Order CIO 2107.2 CUI Policy

# CERTIFICATE OF LIABILITY INSURANCE

DATE (MM/DD/YYYY): 10/11/2024

THIS CERTIFICATE IS ISSUED AS A MATTER OF INFORMATION ONLY AND CONFERS NO RIGHTS UPON THE CERTIFICATE HOLDER. THIS CERTIFICATE DOES NOT AFFIRMATIVELY OR NEGATIVELY AMEND, EXTEND OR ALTER THE COVERAGE AFFORDED BY THE POLICIES BELOW. THIS CERTIFICATE OF INSURANCE DOES NOT CONSTITUTE A CONTRACT BETWEEN THE ISSUING INSURER(S), AUTHORIZED REPRESENTATIVE OR PRODUCER, AND THE CERTIFICATE HOLDER.

IMPORTANT: If the certificate holder is an ADDITIONAL INSURED, the policy(ies) must be endorsed. If SUBROGATION IS WAIVED, subject to the terms and conditions of the policy, certain policies may require an endorsement. A statement on this certificate does not confer rights to the certificate holder in lieu of such endorsement(s).

| | |
|---|---|
| **PRODUCER**<br>Bowen, Miclette & Britt Insurance Agency, LLC<br>2800 North Loop West, Suite 1100<br>Houston TX 77092 | **CONTACT NAME:** Michelle Rushing<br>**PHONE (A/C, No, Ext):** 7138807100 **FAX (A/C, No):** 713-880-7166<br>**E-MAIL ADDRESS:** mrushing@bmbinc.com |
| **INSURED** MUSTANGTRA<br>Mustang Machinery Company, LLC<br>dba Mustang Cat<br>12800 Northwest Freeway<br>Houston TX 77040 | **INSURER(S) AFFORDING COVERAGE** — **NAIC #**<br>INSURER A : Liberty Insurance Corp — 42404<br>INSURER B : Liberty Mutual Fire Ins Co — 23035<br>INSURER C : Great American Insurance Company of NY — 22136<br>INSURER D :<br>INSURER E :<br>INSURER F : |

**COVERAGES** **CERTIFICATE NUMBER:** 1275958758 **REVISION NUMBER:**

THIS IS TO CERTIFY THAT THE POLICIES OF INSURANCE LISTED BELOW HAVE BEEN ISSUED TO THE INSURED NAMED ABOVE FOR THE POLICY PERIOD INDICATED. NOTWITHSTANDING ANY REQUIREMENT, TERM OR CONDITION OF ANY CONTRACT OR OTHER DOCUMENT WITH RESPECT TO WHICH THIS CERTIFICATE MAY BE ISSUED OR MAY PERTAIN, THE INSURANCE AFFORDED BY THE POLICIES DESCRIBED HEREIN IS SUBJECT TO ALL THE TERMS, EXCLUSIONS AND CONDITIONS OF SUCH POLICIES. LIMITS SHOWN MAY HAVE BEEN REDUCED BY PAID CLAIMS.

| INSR LTR | TYPE OF INSURANCE | ADDL INSD | SUBR WVD | POLICY NUMBER | POLICY EFF (MM/DD/YYYY) | POLICY EXP (MM/DD/YYYY) | LIMITS | |
|---|---|---|---|---|---|---|---|---|
| A | X COMMERCIAL GENERAL LIABILITY<br>CLAIMS-MADE X OCCUR<br>GEN'L AGGREGATE LIMIT APPLIES PER:<br>POLICY X PRO-JECT X LOC<br>OTHER: | Y | Y | EB7-691-012083-284 | 7/1/2024 | 7/1/2025 | EACH OCCURRENCE<br>DAMAGE TO RENTED PREMISES (Ea occurrence)<br>MED EXP (Any one person)<br>PERSONAL & ADV INJURY<br>GENERAL AGGREGATE<br>PRODUCTS - COMP/OP AGG<br>$ | $ 2,000,000<br>$ 300,000<br>$ 0<br>$ 2,000,000<br>$ 2,000,000<br>$ 2,000,000<br>$ |
| B | AUTOMOBILE LIABILITY<br>X ANY AUTO<br>ALL OWNED AUTOS<br>SCHEDULED AUTOS<br>HIRED AUTOS<br>NON-OWNED AUTOS | Y | Y | AS2-691-012083-334 | 7/1/2024 | 7/1/2025 | COMBINED SINGLE LIMIT (Ea accident)<br>BODILY INJURY (Per person)<br>BODILY INJURY (Per accident)<br>PROPERTY DAMAGE (Per accident)<br>$ | $ 2,000,000<br>$<br>$<br>$<br>$ |
| C | X UMBRELLA LIAB X OCCUR<br>EXCESS LIAB CLAIMS-MADE<br>DED X RETENTION $ 10,000 | Y | Y | TUU099131410 | 7/1/2024 | 7/1/2025 | EACH OCCURRENCE<br>AGGREGATE<br>$ | $ 1,000,000<br>$ 1,000,000<br>$ |
| A | WORKERS COMPENSATION AND EMPLOYERS' LIABILITY<br>Y/N<br>ANY PROPRIETOR/PARTNER/EXECUTIVE OFFICER/MEMBER EXCLUDED? N<br>(Mandatory in NH) N/A<br>If yes, describe under DESCRIPTION OF OPERATIONS below | | Y | WA7-69D-012083-214 | 7/1/2024 | 7/1/2025 | X PER STATUTE OTH-ER<br>E.L. EACH ACCIDENT<br>E.L. DISEASE - EA EMPLOYEE<br>E.L. DISEASE - POLICY LIMIT | <br>$ 1,000,000<br>$ 1,000,000<br>$ 1,000,000 |

DESCRIPTION OF OPERATIONS / LOCATIONS / VEHICLES (ACORD 101, Additional Remarks Schedule, may be attached if more space is required)

The following policy provisions and/or endorsements form part of the policies of insurance represented by this certificate of insurance. The terms contained in the policies and/or endorsements supersede the representations made herein. Electronic copies of the policy provisions and/or endorsements listed below are available by emailing contact name shown above.

General Liability:
Blanket additional insured premises and operations per form #CG 2010 04/13 and CG 2011 1219 (Lessor)
Blanket additional insured products and completed operations per form #CG 2037 04/13
Blanket waiver of subrogation per form #CG 2404 1219
See Attached...

**CERTIFICATE HOLDER**

City of La Marque
4916 Texas Ave ste c
La Marque TX 77568

**CANCELLATION**

SHOULD ANY OF THE ABOVE DESCRIBED POLICIES BE CANCELLED BEFORE THE EXPIRATION DATE THEREOF, NOTICE WILL BE DELIVERED IN ACCORDANCE WITH THE POLICY PROVISIONS.

AUTHORIZED REPRESENTATIVE

© 1988-2014 ACORD CORPORATION. All rights reserved.

AGENCY CUSTOMER ID: MUSTANGTRA

LOC #:

# ADDITIONAL REMARKS SCHEDULE



| AGENCY | NAMED INSURED |
|---|---|
| Bowen, Miclette & Britt Insurance Agency, LLC | Mustang Machinery Company, LLC<br>dba Mustang Cat<br>12800 Northwest Freeway<br>Houston TX 77040 |
| POLICY NUMBER | |
| CARRIER / NAIC CODE | EFFECTIVE DATE: |

## ADDITIONAL REMARKS

THIS ADDITIONAL REMARKS FORM IS A SCHEDULE TO ACORD FORM,

FORM NUMBER: 25 FORM TITLE: CERTIFICATE OF LIABILITY INSURANCE

Blanket primary/non-contributory per form #LC 2420 11 18

Automobile:
Blanket additional insured per form #AC 8423 08 11
Blanket waiver of subrogation per form #CA 0444 10/13
Blanket primary/non-contributory per form #AC 84 23 08/11

Worker's Compensation:
Blanket waiver of subrogation per form #WC 42 03 04 B
Blanket Alternate Employer per form #WC 00 03 01 04/84

Umbrella Liability:
Blanket additional insured per form #GAI6002 06 97
Blanket waiver of subrogation per form #GAI6002 06 97
Blanket primary/non-contributory per form #GAI6011 06 97



© 2008 ACORD CORPORATION. All rights reserved.

The ACORD name and logo are registered marks of ACORD

**THIS ENDORSEMENT CHANGES THE POLICY. PLEASE READ IT CAREFULLY.**

# ADDITIONAL INSURED – OWNERS, LESSEES OR CONTRACTORS – SCHEDULED PERSON OR ORGANIZATION

This endorsement modifies insurance provided under the following:

COMMERCIAL GENERAL LIABILITY COVERAGE PART

**A. Section II – Who Is An Insured** is amended to include as an additional insured the person(s) or organization(s) shown in the Schedule, but only with respect to liability for "bodily injury", "property damage" or "personal and advertising injury" caused, in whole or in part, by:

1. Your acts or omissions; or
2. The acts or omissions of those acting on your behalf;

in the performance of your ongoing operations for the additional insured(s) at the location(s) designated above.

However:

1. The insurance afforded to such additional insured only applies to the extent permitted by law; and
2. If coverage provided to the additional insured is required by a contract or agreement, the insurance afforded to such additional insured will not be broader than that which you are required by the contract or agreement to provide for such additional insured.

**B.** With respect to the insurance afforded to these additional insureds, the following additional exclusions apply:

This insurance does not apply to "bodily injury" or "property damage" occurring after:

1. All work, including materials, parts or equipment furnished in connection with such work, on the project (other than service, maintenance or repairs) to be performed by or on behalf of the additional insured(s) at the location of the covered operations has been completed; or
2. That portion of "your work" out of which the injury or damage arises has been put to its intended use by any person or organization other than another contractor or subcontractor engaged in performing operations for a principal as a part of the same project.

**C.** With respect to the insurance afforded to these additional insureds, the following is added to **Section III – Limits Of Insurance:**

If coverage provided to the additional insured is required by a contract or agreement, the most we will pay on behalf of the additional insured is the amount of insurance:

1. Required by the contract or agreement; or
2. Available under the applicable Limits of Insurance shown in the Declarations;

whichever is less.

This endorsement shall not increase the applicable Limits of Insurance shown in the Declarations.

 © ISO Properties, Inc., 2012 

**SCHEDULE**

| Name Of Additional Insured Person(s) Or Organization(s) | Location(s) Of Covered Operations |
|---|---|
| Any person or organization for whom you have agreed in a written contract or agreement, prior to an "occurrence" or offense, that such person or organization be added as an additional insured to your policy, where the written contract or agreement obligates you to utilize the April 2013 version of the ISO CG 20 10 additional insured endorsement. | All locations as required by a written contract or agreement entered into prior to an 'occurrence' or offense. |
| Information required to complete this Schedule, if not shown above, will be shown in the Declarations. | |

**THIS ENDORSEMENT CHANGES THE POLICY. PLEASE READ IT CAREFULLY.**

# ADDITIONAL INSURED – OWNERS, LESSEES OR CONTRACTORS – COMPLETED OPERATIONS

This endorsement modifies insurance provided under the following:

COMMERCIAL GENERAL LIABILITY COVERAGE PART
PRODUCTS/COMPLETED OPERATIONS LIABILITY COVERAGE PART

**SCHEDULE**

| Name Of Additional Insured Person(s) Or Organization(s) | Location And Description Of Completed Operations |
|---|---|
| Any person or organization for whom you have agreed in a written contract or agreement, prior to an "occurrence" or offense, that such person or organization be added as an additional insured to your policy, where the written contract or agreement obligates you to utilize the April 2013 version of the ISO CG 20 37 additional insured endorsement. | All locations as required by a written contract or agreement entered into prior to an 'occurrence' or offense. |
| Information required to complete this Schedule, if not shown above, will be shown in the Declarations. | |

**A.** **Section II – Who Is An Insured** is amended to include as an additional insured the person(s) or organization(s) shown in the Schedule, but only with respect to liability for "bodily injury" or "property damage" caused, in whole or in part, by "your work" at the location designated and described in the Schedule of this endorsement performed for that additional insured and included in the "products-completed operations hazard".

However:

1. The insurance afforded to such additional insured only applies to the extent permitted by law; and
2. If coverage provided to the additional insured is required by a contract or agreement, the insurance afforded to such additional insured will not be broader than that which you are required by the contract or agreement to provide for such additional insured.

**B.** With respect to the insurance afforded to these additional insureds, the following is added to **Section III – Limits Of Insurance:**

If coverage provided to the additional insured is required by a contract or agreement, the most we will pay on behalf of the additional insured is the amount of insurance:

1. Required by the contract or agreement; or
2. Available under the applicable Limits of Insurance shown in the Declarations;

whichever is less.

This endorsement shall not increase the applicable Limits of Insurance shown in the Declarations.

 © Insurance Services Office, Inc., 2012 

**THIS ENDORSEMENT CHANGES THE POLICY. PLEASE READ IT CAREFULLY.**

# ADDITIONAL INSURED – MANAGERS OR LESSORS OF PREMISES

This endorsement modifies insurance provided under the following:

COMMERCIAL GENERAL LIABILITY COVERAGE PART

**SCHEDULE**

| |
|---|
| **Designation Of Premises (Part Leased To You):**<br><br>Any premises you lease |
| **Name Of Person(s) Or Organization(s) (Additional Insured):**<br><br>Any manager or lessor of your premises for whom you have agreed in writing prior to a loss to provide liability insurance. |
| **Additional Premium:** $ Included |
| Information required to complete this Schedule, if not shown above, will be shown in the Declarations. |

**A.** **Section II – Who Is An Insured** is amended to include as an additional insured the person(s) or organization(s) shown in the Schedule, but only with respect to liability for "bodily injury", "property damage" or "personal and advertising injury" caused, in whole or in part, by you or those acting on your behalf in connection with the ownership, maintenance or use of that part of the premises leased to you and shown in the Schedule and subject to the following additional exclusions:

This insurance does not apply to:

1. Any "occurrence" which takes place after you cease to be a tenant in that premises.
2. Structural alterations, new construction or demolition operations performed by or on behalf of the person(s) or organization(s) shown in the Schedule.

However:

1. The insurance afforded to such additional insured only applies to the extent permitted by law; and
2. If coverage provided to the additional insured is required by a contract or agreement, the insurance afforded to such additional insured will not be broader than that which you are required by the contract or agreement to provide for such additional insured.

**B.** With respect to the insurance afforded to these additional insureds, the following is added to **Section III – Limits Of Insurance:**

If coverage provided to the additional insured is required by a contract or agreement, the most we will pay on behalf of the additional insured is the amount of insurance:

1. Required by the contract or agreement; or
2. Available under the applicable limits of insurance;

whichever is less.

This endorsement shall not increase the applicable limits of insurance.


© Insurance Services Office, Inc., 2018

Canopy option

**RATING SHEET – REQUEST FOR PROPOSALS (RFP)**
**COMPETITIVE PROCUREMENT FOR GENERAL SERVICES, SUPPLIES, AND/OR EQUIPMENT**

| | |
|---|---|
| Entity Name: | R. B. Everett & Co. |
| IFB Title or Number: | |
| Source of Funds: | American Rescue Plan Act (ARPA) (list others) |
| Evaluator's Name: | Christine Turner |
| Name of Respondent: | Rob Via |
| Date of Rating: | 11-4-2024 |

Each evaluation committee member shall independently assess the content of each response using only the evaluation criteria and weights published in the solicitation and award points up to the maximum listed for each factor. Information necessary to assess the Respondent on these criteria may be gathered from past experience with the Respondent, from the Respondent's proposal response, and/or by contacting past/current clients (references) of the Respondent. Respondents proposing to offer specific services (if allowed in IFB) should be scored only on those services. Rate Respondent in the following areas:

**Pass/Fail Criteria**

| | Factor | Pass | Fail | Comments |
|---|---|---|---|---|
| 1. | Responsiveness of Proposal | ✓ | | |
| 2. | Financial Stability | ✓ | | |
| **Must pass all above areas to proceed. If a Fail is marked, stop here.** | | | | |

**Total Score (A + B + C)**

| | Factor | Maximum Points | Score | Comments |
|---|---|---|---|---|
| A. | **Understanding of Work, Experience, and Relevant Qualifications** – Experience in services similar in size and scope; total number and types of employees, skills, knowledge and abilities, company background history, number of years in providing similar services. | 20 | 20 | |
| B. | **Capacity to Perform and Delivery/Service Schedule** – Demonstrated capacity to provide goods or services within the prescribed delivery date and time. Provided references should be considered in this evaluation. | 20 | 5 | |
| C. | **Pricing** – Prices for all goods and/or services shall be all inclusive and valid for 90 days. | 60 | 60 | |
| | **TOTAL AVAILABLE POINTS** | **100** | 85 | |

**RATING SHEET – REQUEST FOR PROPOSALS (RFP)**
**COMPETITIVE PROCUREMENT FOR GENERAL SERVICES, SUPPLIES, AND/OR EQUIPMENT**

| | |
|---|---|
| Entity Name: | City of La Marque |
| IFB Title or Number: | 2024 Mini-Excavators (Canopy) |
| Source of Funds: | American Rescue Plan Act (ARPA) (list others) |
| Evaluator's Name: | Amanda Hobby |
| Name of Respondent: | B.B. Everett |
| Date of Rating: | November 4, 2024 |

Each evaluation committee member shall independently assess the content of each response using only the evaluation criteria and weights published in the solicitation and award points up to the maximum listed for each factor. Information necessary to assess the Respondent on these criteria may be gathered from past experience with the Respondent, from the Respondent's proposal response, and/or by contacting past/current clients (references) of the Respondent. Respondents proposing to offer specific services (if allowed in IFB) should be scored only on those services. Rate Respondent in the following areas:

**Pass/Fail Criteria**

| | Factor | Pass | Fail | Comments |
|---|---|---|---|---|
| 1. | Responsiveness of Proposal | \ | | |
| 2. | Financial Stability | \ | | |
| **Must pass all above areas to proceed. If a Fail is marked, stop here.** | | | | |

**Total Score (A + B + C)**

| | Factor | Maximum Points | Score | Comments |
|---|---|---|---|---|
| A. | **Understanding of Work, Experience, and Relevant Qualifications** – Experience in services similar in size and scope; total number and types of employees, skills, knowledge and abilities, company background history, number of years in providing similar services. | 20 | 10 | |
| B. | **Capacity to Perform and Delivery/Service Schedule** – Demonstrated capacity to provide goods or services within the prescribed delivery date and time. Provided references should be considered in this evaluation. | 20 | 10 | |
| C. | **Pricing** – Prices for all goods and/or services shall be all inclusive and valid for 90 days. | 60 | 60 | |
| | **TOTAL AVAILABLE POINTS** | **100** | 80 | |

Cab option

**RATING SHEET – REQUEST FOR PROPOSALS (RFP)**
**COMPETITIVE PROCUREMENT FOR GENERAL SERVICES, SUPPLIES, AND/OR EQUIPMENT**

| | |
|---|---|
| Entity Name: | R. B. Everett & Co. |
| IFB Title or Number: | |
| Source of Funds: | American Rescue Plan Act (ARPA) (list others) |
| Evaluator's Name: | Christine Turner |
| Name of Respondent: | Rob Via |
| Date of Rating: | 11-4-2024 |

Each evaluation committee member shall independently assess the content of each response using only the evaluation criteria and weights published in the solicitation and award points up to the maximum listed for each factor. Information necessary to assess the Respondent on these criteria may be gathered from past experience with the Respondent, from the Respondent's proposal response, and/or by contacting past/current clients (references) of the Respondent. Respondents proposing to offer specific services (if allowed in IFB) should be scored only on those services. Rate Respondent in the following areas:

**Pass/Fail Criteria**

| | Factor | Pass | Fail | Comments |
|---|---|---|---|---|
| 1. | Responsiveness of Proposal | ✓ | | |
| 2. | Financial Stability | ✓ | | |
| **Must pass all above areas to proceed. If a Fail is marked, stop here.** | | | | |

**Total Score (A + B + C)**

| | Factor | Maximum Points | Score | Comments |
|---|---|---|---|---|
| A. | **Understanding of Work, Experience, and Relevant Qualifications** – Experience in services similar in size and scope; total number and types of employees, skills, knowledge and abilities, company background history, number of years in providing similar services. | 20 | 20 | |
| B. | **Capacity to Perform and Delivery/Service Schedule** – Demonstrated capacity to provide goods or services within the prescribed delivery date and time. Provided references should be considered in this evaluation. | 20 | 5 | |
| C. | **Pricing** – Prices for all goods and/or services shall be all inclusive and valid for 90 days. | 60 | 60 | |
| | **TOTAL AVAILABLE POINTS** | **100** | 85 | |

**RATING SHEET – REQUEST FOR PROPOSALS (RFP)**
**COMPETITIVE PROCUREMENT FOR GENERAL SERVICES, SUPPLIES, AND/OR EQUIPMENT**

| | |
|---|---|
| Entity Name: | City of La Marque |
| IFB Title or Number: | 2024 Mini-Excavators (Cab) |
| Source of Funds: | American Rescue Plan Act (ARPA) (list others) |
| Evaluator's Name: | Amanda Hobby |
| Name of Respondent: | B.B. Everett |
| Date of Rating: | November 4, 2024 |

Each evaluation committee member shall independently assess the content of each response using only the evaluation criteria and weights published in the solicitation and award points up to the maximum listed for each factor. Information necessary to assess the Respondent on these criteria may be gathered from past experience with the Respondent, from the Respondent's proposal response, and/or by contacting past/current clients (references) of the Respondent. Respondents proposing to offer specific services (if allowed in IFB) should be scored only on those services. Rate Respondent in the following areas:

**Pass/Fail Criteria**

| | Factor | Pass | Fail | Comments |
|---|---|---|---|---|
| 1. | Responsiveness of Proposal | ✓ | | |
| 2. | Financial Stability | ✓ | | |
| **Must pass all above areas to proceed. If a Fail is marked, stop here.** | | | | |

**Total Score (A + B + C)**

| | Factor | Maximum Points | Score | Comments |
|---|---|---|---|---|
| A. | **Understanding of Work, Experience, and Relevant Qualifications** – Experience in services similar in size and scope; total number and types of employees, skills, knowledge and abilities, company background history, number of years in providing similar services. | 20 | 10 | |
| B. | **Capacity to Perform and Delivery/Service Schedule** – Demonstrated capacity to provide goods or services within the prescribed delivery date and time. Provided references should be considered in this evaluation. | 20 | 10 | |
| C. | **Pricing** – Prices for all goods and/or services shall be all inclusive and valid for 90 days. | 60 | 60 | |
| | **TOTAL AVAILABLE POINTS** | **100** | 80 | |

(2) Mini Excavators
- Cab option
- Canopy option

R.B Everett

# City of La Marque

1111 Bayou Road
La Marque, Texas 77568

## REQUEST FOR PROPOSALS (RFP)
## COMPETITIVE PROCUREMENT FOR
## GENERAL SERVICES, SUPPLIES, AND/OR EQUIPMENT

This RFP is being supported

by federal award number [RCP-056096]

allocated to the

**City of La Marque**

under the

**American Rescue Plan Act (ARPA)**

**Coronavirus State and Local Fiscal Recovery Funds (SLFRF)**

**by the U.S. Department of the Treasury**

**Prepared By: Department of Public Works**

## Procurement Reference #2232

# American Rescue Plan Act (ARPA)
# Request for Proposals (RFP)

Date: October 1, 2024

Re: Request for Proposals (RFP) for two (2) 2024 Mini-Excavators funded with Coronavirus State and Local Fiscal Recovery Funds (SLFRF) Allocated Under the American Rescue Plan Act (ARPA)

Dear Vendor:

The City of La Marque, hereinafter called "Entity", has received an allocation of American Rescue Plan Act (ARPA) funds, and is issuing a Request for Proposals (RFP) for a general purchases and supplies contract. The item(s) are being solicited to assist the Entity in completing and implementing programs and/or projects funded with its allocation of ARPA funds.

The Sole Point of Contact for this solicitation may provide information regarding this RFP. Refer to the **Schedule of Events and Selection Summary** in Section 1 of this document for response details.

Respondent is responsible for ensuring that their RFP response is received in a timely manner and that it contains all elements of the RFP, including all required forms and any addendums issued. Respondent should complete the Solicitation Response Cover Sheet/Acknowledgement of Addenda/Submission Checklist contained in Attachment A and all other requirements identified in the RFP. RFP responses received after the deadline will not be opened and therefore not evaluated or considered for award, regardless of whether or not the delay was outside the control of the submitting provider. The City of La Marque reserves the right to negotiate with providers submitting timely responses in accordance with state and federal procurement requirements, to reject any and all bids, and to select multiple respondents if it deems it's in the best interest of the Entity and/or desires to do so.

The Entity is an Affirmative Action/Equal Opportunity Employer. Minority Business Enterprises, Small Business Enterprises, Women Business Enterprises, and Labor Surplus Area firms are encouraged to submit bids.

**CONTENTS** **PAGE**


**AMERICAN RESCUE PLAN ACT (ARPA) REQUEST FOR PROPOSALS (RFP)** 2

**REQUEST FOR PROPOSALS – GENERAL INFORMATION** 4

**SECTION 1 – SCHEDULE OF EVENTS AND SELECTION SUMMARY** 4

**SECTION 2 – INTRODUCTION AND GENERAL CONDITIONS** 6

**SECTION 3 – SCOPE OF WORK/TECHNICAL SPECIFICATIONS** 9

**SECTION 4 – EVALUATION CRITERIA** 12

**SECTION 5 – RESPONSE SUBMISSION REQUIREMENTS** 14

**LIST OF EXHIBITS** 16

EXHIBIT A: PROJECT SCOPE OF WORK 17

EXHIBIT B: REQUIRED CONTRACT PROVISIONS 18

EXHIBIT C: OTHER RELEVANT INFORMATION/SPECIAL CONDITIONS 31

**LIST OF ATTACHMENTS A THROUGH L** 32

ATTACHMENT A: SOLICITATION RESPONSE COVER SHEET/ACKNOWLEDGEMENT OF ADDENDA/SUBMISSION CHECKLIST 33

ATTACHMENT B: PRICING SHEET 35

ATTACHMENT C: SYSTEM FOR AWARD MANAGEMENT (SAM.GOV) RECORD SEARCH 36

ATTACHMENT D: CUSTOMER/CLIENT REFERENCES 38

ATTACHMENT E: CERTIFICATE OF INSURANCE (IF APPLICABLE) 41

ATTACHMENT F: ETHICS AND CONFLICT OF INTEREST ACKNOWLEDGEMENT 42

ATTACHMENT G: STATEMENT OF CONFLICTS OF INTEREST (IF ANY) 43

ATTACHMENT H: CONFLICT OF INTEREST QUESTIONNAIRE FORM (CIQ) 44

ATTACHMENT I: DISCLOSURE OF LOBBYING ACTIVITIES SF-LLL CERTIFICATION 46

ATTACHMENT J: TEC CERTIFICATE OF INTERESTED PARTIES (FORM 1295) 48

ATTACHMENT K: BIDDER'S CERTIFICATION 49

ATTACHMENT L: NON-COLLUSION AFFIDAVIT 50

**APPENDIX I – SAMPLE CONTRACT** 51

## REQUEST FOR PROPOSALS – GENERAL INFORMATION

## SECTION 1 – SCHEDULE OF EVENTS AND SELECTION SUMMARY

1.1 **SCHEDULE OF EVENTS – ALL DATES ARE TENTATIVE**

1.1.1 The Entity reserves the right to change dates at any time. At the sole discretion of the Entity, events listed in Section 1 are subject to scheduling changes and cancellation. The Entity will make public any changes to the stated schedule.

1.1.2 All requests, questions, or other communication about this solicitation shall be made in writing and addressed to the Entity's Sole Point of Contact listed in the **Schedule of Events + Response Requirements** that follow. Only the Sole Point of Contact may be contacted regarding required elements for this RFP.

1.1.3 **Respondent must review all documents and information in the *Exhibits* section and complete the required documents in the *Attachments* section. The completed Attachments, including the signed Pricing Sheet, must be contained within the Proposal Response and submitted to the Point of Contact listed in the Schedule of Events + Response Requirements that follow.**

### SCHEDULE OF EVENTS + RESPONSE REQUIREMENTS

| SCHEDULE OF EVENTS | |
|---|---|
| **RFP NOTICE DATE:** | October 1, 2024 |
| **VENDOR QUESTIONS DUE:** | October 15, 2024, 5:00 PM CST |
| **QUESTIONS ANSWERED BY:** | October 22, 2024, 5:00 PM CST |
| **PRE-PROPOSAL CONFERENCE:**<br><br>The Entity shall reject responses submitted by firms that do not attend the mandatory pre-proposal conference. | None |
| **SITE VISIT:**<br><br>The Entity shall reject responses submitted by firms that do not attend the mandatory site visit. | If needed, will be scheduled. |
| **PROPOSAL DUE DATE:** | October 31, 2024, 10:00 AM CST |
| | |
| **ESTIMATED AWARD DATE:** | November 18, 2024, 6:00 PM CST |
| **RESPONSE REQUIREMENTS** | |

| QUESTIONS & ANSWERS ONLY – SOLE POINT OF CONTACT | |
|---|---|
| The Entity will allow written questions and requests for clarification of this solicitation. Questions must be submitted by email to the Sole Point of Contact listed below. Respondents' names will be removed from questions in any responses released. | |
| **SOLE POINT OF CONTACT NAME:** | City Clerk |
| **ADDRESS:** | 1111 Bayou Road La Marque, TX 77568 |
| **EMAIL:** | bids@cityoflamarque.org |
| **PHONE:** | 409-938-9259 |
| **DELIVERY OF RESPONSE PROPOSAL – POINT OF CONTACT** | |
| **For digital delivery,** the Subject Line should include Respondent's Name, RFP number, and time/due date of RFP and completed response and all attachments uploaded to the following point of contact: | |
| **NAME:** | - |
| **TITLE:** | City Clerk |
| **DELIVERY POINT:** | Bidsubmit.cityoflamarque.org |
| | |
| **If mailed or hand-delivered,** sealed proposals (an original and 3 copies) should be submitted on the original forms provided. Each response must be sealed and should be placed in a properly identified envelope with Respondent's Name, RFP number, and time/due date of RFP. | |
| **For mail or hand-delivery,** deliver response and all attachments to: | |
| **NAME:** | - |
| **TITLE:** | City Clerk |
| **ADDRESS:** | 1111 Bayou Road LaMarque, TX 77568 |
| | |

## 1.2 SELECTION OF RESPONDENT(S)

1.2.1 The Entity intends to select Respondent(s) that best meet the needs of the Entity and that provide the best overall value. The Entity reserves the right to award multiple contracts from the finalist pool of successful Respondent(s). Respondents will be rated and ranked according to the evaluation criteria set forth below. The Entity intends to enter into negotiations with the top-ranked Respondent (i.e., the most highly qualified) and attempt to negotiate a fair and reasonable price; if negotiations fail, the Entity shall formally end negotiations with that respondent and attempt to negotiate with the next most highly qualified provider. The Entity shall proceed in like manner until it has contracted with a sufficient number of providers to respond to the identified scope of work.

1.2.2 The Entity reserves the right to check references on any projects performed by the Respondent, whether provided by the Respondent or known by the Entity.

1.2.3 The Entity is not required to accept the lowest cost proposal.

1.2.4 The Entity may make such investigation as deemed necessary to determine the ability of the Respondent to perform the work, and the Respondent shall furnish to the Entity all such information by the date specified by the Entity.

1.2.5 The Entity may conduct such investigations as it deems necessary or appropriate to assist in the evaluation of any RFP response and to establish the responsibility, qualifications, and financial ability of the Respondent, their proposed subcontractors, and other persons or organizations submitted within a Respondent's response to do the work to the Entity's satisfaction within the prescribed time.

1.2.6 The Entity reserves the right to conduct interviews of short-listed Respondent(s) prior to making a final selection.

1.2.7 The Entity reserves the right to contact references as deemed necessary to complete its analysis.

**See SECTION 4 – EVALUATION CRITERIA, for additional information on how Respondents will be evaluated and selected.**

# SECTION 2 – INTRODUCTION AND GENERAL CONDITIONS

## 2.1 GENERAL DESCRIPTION OF THE SCOPE OF WORK (SOW) – SEE *SECTION 3* AND *EXHIBIT A* FOR SOW DETAILS

The Entity has received an allocation of American Rescue Plan Act (ARPA) funds and is issuing a Request for Proposals (RFP) for a general purchases and supplies contract. The item(s) are being solicited to assist the Entity in completing and implementing programs and/or projects funded with its allocation of ARPA funds.

This solicitation includes purchase of:

2.1.1 **General Description:** Examples: two (2) 2024 Mini-Excavators

2.1.2 The scope of work includes all labor, materials, goods and/or services necessary to provide the purchased items, including any installation specified in **Exhibit A**. The respondent shall submit a written copy of all warranty information prior to final acceptance by Entity.

2.1.3 **REFERENCED BRAND EXAMPLE:** Catalogs, brand names or manufacturer's references are descriptive only and indicate type and quality desired. Proposals on brands of like nature and quality will be considered. If proposing other than the referenced brands/model number, Respondent must show manufacturer, brand or trade name, product number and provide complete descriptive information of product offered and include with response. Failure to take exception to specifications or reference data will require Respondent to furnish specified brand names, numbers, etc.

**2.2 CONSIDERATION OF AWARD**

To be considered for award, Respondents must adhere to the requirements, when applicable to Vendors, as set forth in **Exhibit B**, the ARPA Required Provisions, and provide all other required information and documentation as set forth in this solicitation.

**2.3 CONTRACT AWARD**

The Entity may award a Firm Fixed Price Contract. A Respondent's proposal must be responsive to this solicitation and include all required documents as instructed in the solicitation and listed in the *Solicitation Response Cover Sheet/Acknowledgement of Addenda/Submission Checklist* **(Attachment A).**

**2.4 TERM OF PURCHASE CONTRACT**

The Contract or Purchase Order shall be effective upon date of execution (signed by the Entity designee), shall contain terms and conditions for the purchase, including delivery date and delivery location, and shall expire upon delivery and final acceptance by the Entity. A sample contract is available for review at **Appendix I.**

**2.5 BID ACCEPTANCE**

2.5.1 Proposals must be <u>received</u>, time stamped or otherwise acknowledged before the specified hour and date. Late submittals <u>WILL NOT</u> be considered under any circumstances. The Entity will not be held responsible for any solicitation response that is mishandled prior to receipt by the Entity. The Entity will not be responsible for any technical issues that result in late delivery, inappropriately identified documents, or other submission error that may lead to disqualification (including substantive or administrative) or nonreceipt of the Respondent's response.

2.5.2 The Entity reserves the right to accept or reject any and all proposals, to accept any proposal deemed advantageous and to waive irregularity in the proposals. By submitting a response, the Respondent acknowledges and will adhere to all specifications as stated within this procurement packet.

2.5.3 Proposals CANNOT be altered or amended after the due date. Any alterations made before the due time must be initialed by Respondent or authorized agent. No response may be withdrawn after due date without approval and based on a written acceptable reason.

2.5.4 The Entity reserves the right to revise or amend the specifications prior to the due date. Such revisions or amendments, if any, will be announced by amendments or addendums to these specifications. Copies of such amendments or addendums so issued will be posted to the Entity's bidding websites. If Respondent demonstrates just reason for a change, the Entity must have at least five (5) working days' notice prior to submission due date.

2.5.5 In the event that Respondent finds discrepancies in or omissions from the specifications or other documents or be in doubt as to their meaning, Respondent should at once notify the Entity Sole Point of Contact and obtain clarification prior to submitting a response.

2.5.6 All Respondents must meet or exceed the minimum specifications to be considered a valid response. The Entity reserves the right to accept or reject all or any part of any response, waive minor technicalities and award the contract either to the lowest responsible Respondent or to the Respondent who provides goods or services at the best value for the Entity.

2.5.7 The Respondent agrees to protect the Entity from claims involving infringement of patents or copyrights.

PROPRIETARY OR CONFIDENTIAL INFORMATION; TEXAS PUBLIC INFORMATION ACT: Any proprietary, trade secret, or otherwise confidential information Respondent includes in its Proposal must be clearly labeled as proprietary or confidential information, and Respondent must identify the specific exception to disclosure in the Public Information Act (PIA). Merely making a blanket claim that the entire Proposal is protected from disclosure because it contains some proprietary information is not acceptable and shall make the entire Proposal subject to release under the PIA. Any information which is not clearly identified as proprietary or confidential shall be deemed to be subject to disclosure pursuant to the PIA.

Information, documentation, and other material in connection with this Response or any resulting Contract may be subject to public disclosure under the Texas PIA, Chapter 552 of the Texas Gov't Code.

2.5.8 There is no guarantee a contract will be awarded. The Entity reserves the right to cancel this RFP at any time.

2.5.9 All proposals become public documents and are subject to public review (upon request and as allowed by law). The submission of an RFP response will constitute representation by the Respondent that it understands and has complied with the requirements of the RFP. Submission of a response indicates the RFP information provided was sufficient in scope and detail to convey understanding of anticipated terms and conditions for performance of the work.

2.5.10 RFP Respondents assume all costs of preparation of the proposal. RFP responses become the property of the Entity.

## 2.6 PROHIBITED COMMUNICATION

On issuance of this solicitation, except for the written inquiries described in Section 2.6 above, the Entity, its representative(s), or partners will not answer any questions or otherwise discuss the contents of this solicitation with any potential respondent. This restriction does not preclude discussions between affected parties for the purposes of conducting business unrelated to this solicitation. Failure to comply with these requirements may result in disqualification of respondent's solicitation response.

## 2.7 TERMINATION CONDITIONS

See Contract at **Appendix I** for Termination Conditions.

### 2.7.1 FAILURE TO ENTER INTO A CONTRACT

Should the Selected Respondent ("Vendor"), to whom the contract is awarded, fail to enter into a contract within twenty-one (21) business days, the Entity may then, at its option, retain the Vendor's bid deposit/bond (if required) and accept the bid of the next lowest responsible bidder.

## SECTION 3 – SCOPE OF WORK/TECHNICAL SPECIFICATIONS

### 3.1 MINIMUM REQUIREMENTS

3.1.1 The selected Vendor shall have no convictions or civil judgments preceding nor thereafter this solicitation rendered against Respondent for 1) commission of fraud or a criminal offense in connection with obtaining, attempting to obtain, or performing a public (federal, state or local) transaction or contract under a public transaction; 2) violation of federal or state antitrust statutes or commission of embezzlement, theft, forgery, bribery, falsification or destruction of records, making false statements, or receiving stolen property.

3.1.2 The selected Vendor shall not ever have been indicted for or otherwise criminally or civilly charged by a government entity (federal, state, or local) with commission of any of the offenses enumerated above.

3.1.3 Where applicable, Vendor's staff must meet and maintain current certifications and or licensure requirements as mandated by state law or the appropriate licensing authority.

3.1.4 Vendor must not be debarred at the time of response submission, and prior to award of a contract. The System for Award Management (SAM.gov) and the Texas Comptroller's Debarred Vendor List will be checked to ensure the Vendor is not excluded from contract participation at the federal level. If the Vendor is debarred, the Vendor's proposal will not be evaluated.

### 3.2 SCOPE OF SERVICES Construct

3.2.1 **The required products or services shall be provided in accordance with attached Exhibits:**

- **Exhibit A:** Project Scope of Work
- **Exhibit B:** ARPA Required Provisions
- **Exhibit C:** Other Relevant Information

3.2.2 **Work Orders**

During the term of any contract awarded, the Entity may request the Vendor to perform certain tasks as described in the scope, subject to a specific work order authorization. All work authorizations shall be in writing, signed by all parties, and shall include a scope of services, a list of tasks to be performed, a time schedule, a list of deliverables and such other information or special conditions as may be necessary for the work requested.

3.2.3 **Condition of Product:** New Equipment ONLY; NO re-manufactured or "gray market" items. All items must be covered by the manufacturer's warranty. The unit(s) shall be made ready for continuous operation upon delivery. Respondent is cautioned that any unit delivered to the FOB point that does not meet specifications in every aspect will not be accepted.

3.2.4 **All Parts:** All parts not specifically mentioned which are necessary for the unit to be complete and ready for operation or which are normally furnished as standard equipment shall be furnished by the vendor. All parts shall conform in strength, quality, and workmanship to the accepted standards of the industry.

3.2.5 **Manuals:** Manuals containing illustrated parts list and operating and service instructions for the units shall be delivered with units. Manuals shall outline all necessary service and operating instructions for the units delivered and provide necessary warning and safety precautions.

3.2.6 **Warranty Requirements:** The units shall be warranted against defects in material and workmanship for a standard manufacturer's warranty and shall cover 100% parts and labor for the units. Vendor shall furnish warranty and a list of warrantied repair companies to the Entity at time of delivery. The warranty begins on the date the units are determined to meet specifications and accepted by the Entity.

**3.3 DELIVERY AND ACCEPTANCE**

3.3.1 **Freight Charges:** Shipping shall be Free on Board (FOB) destination; therefore, unit prices must include all shipping, handling, fuel surcharges, and delivery fees.

3.3.2 **Delivery Schedule:** Recommended delivery not to exceed 90 calendar days from date of award; delivery terms may be a factor in determining award. Respondent must contact the Entity point of contact to schedule delivery date and time. Respondent shall provide a minimum forty-eight (48) hours' notice prior to delivery.

**3.4 DELIVERY CONTACT(S):** Respondent shall contact the Entity for delivery a minimum of one (1) week in advance to coordinate delivery.

| | |
|---|---|
| **Delivery Contact Name:** | City Clerk |
| **Phone:** | (409) 938-9259 |
| **Email:** | bids@cityoflamarque.org |

**3.5 REGISTRATION AND TITLING (when applicable):** Permanent registration and titling will be performed by **the Entity. DO NOT REGISTER ITEM**. Respondent shall supply, as applicable, dealer's tag for item for sixty (60) days from date of delivery. The original Certificate of Origin (COO) or Manufacturer's Statement of Origin (MSO) as well as the most current version of TXDMV Form 130U or Application for Texas Title with signature shall be submitted with an invoice to the Entity.

**3.6 DELIVERY DELAYS:** If delay is foreseen, Respondent shall give written notice to the Entity and must keep the Entity advised of status of order at all times. Default in promised Delivery Days After Receipt of Order (ARO) without accepted reasons or failure to meet specifications authorizes the Entity to cancel contract/Purchase Order.

**3.7 COMPLIANT PRODUCTS:** Delivery does not occur until the Respondent delivers products, materials, or services in full compliance with the specifications to Entity's FOB destination, unless delivery is specifically accepted, in whole or in part, by the Entity. Providing products, materials, or services which do not meet all specification requirements does not constitute delivery. Entity reserves the right to require new delivery or a refund in the event that materials or products not meeting specifications are discovered after payment has been made. NO SUBSTITUTIONS PERMITTED WITHOUT WRITTEN APPROVAL OF THE ENTITY.

**3.8 ACCEPTANCE:** All equipment ordered will be subject to acceptance inspection and performance testing upon receipt. Acceptance inspection and performance testing will not take more than five (5) working days, weather permitting. Respondent will be notified within this time frame of any units not

delivered in full compliance with the purchase order specifications. In the event the goods tested fail to meet or exceed all conditions and requirements of the solicitation and Contract, the goods will be rejected in whole or in part, at the State's Entity's option, and returned to the Vendor or held for disposition at the Vendor's expense. Latent defects may result in cancellation of the Contract at no expense to the Entity.

## 3.9 RECORD KEEPING

3.9.1 Respondents shall provide, enter, or upload all documentation, communications, and records including all permits, certifications, warranties, and approvals regarding all provided services/ products as instructed by the Entity.

3.9.2 Respondents shall maintain records of all events that affect, or may be expected to affect the quality, scope, or progress of the services. All records shall be retained for a period of **five (5) years** following the closeout of the Entity's federal grant.

3.9.3 **Insurance**

3.9.3.1 If applicable, an original, certified copy of an Insurance Certificate listing the Entity as additional insured, must be submitted with the Respondent's submittal **(see Attachment E for requirements).** The successful Respondent will be required to maintain at all times during performance of the Contract, the insurance detailed below.

3.9.3.2 Workers' Compensation Insurance

3.9.3.3 Employers' Liability Insurance

3.9.3.4 Comprehensive General Liability Insurance

3.9.3.5 Excess Liability Insurance, Comprehensive General Liability Insurance, Comprehensive Automobile Liability Insurance

## 3.10 TERMS AND CONDITIONS

3.10.1 **Indemnity Clause** – The Respondent agrees to indemnify and save harmless the Entity and its officers, agents, and employees from any and all claims, causes or action, and damages of every kind, for injury to or death of any person and damages, to property arising out of or in connection with the work done by Respondent under this contract, and including acts or omissions of the Entity or its officers, agents, or employees in connection with said contract.

3.10.2 **Equal Opportunity Employer** – The successful Respondent shall warrant and agree that he/she is an Equal Opportunity Employer. Should complaints of any form of discrimination, either in dispensation of the service, or within company hiring policies be substantiated, this contract may be terminated immediately.

3.10.3 **Assignment** – The successful Respondent may not assign, sell, or otherwise transfer this contract without prior written consent of the Entity.

3.10.4 **Compliance with Laws** – The Respondent agrees to comply with the requirements of Section 603 of the Act, regulations adopted by Treasury pursuant to Section 603(f) of the Act, and guidance issued by Treasury regarding the foregoing.

3.10.4.1 Additionally, all applicable local government codes for the State of Texas also apply to this contract. All equipment, supplies and work furnished under this contract shall comply with applicable laws, ordinances, and regulations. Respondent shall obtain and pay for such

permits and inspections as are required for the legal performance of this work, unless otherwise specified. Respondent shall comply with all federal and state laws and Entity's ordinances and codes applicable to the Respondent's operation under this contract. These specifications and the contract resulting here shall be fully governed by the laws of the State of Texas and shall be fully performable in Galveston County, Texas, where venue for any proceeding arising hereunder will lie.

3.10.5 **Silence of Specifications** – The apparent silence of specifications as to any detail, or the apparent omission from it or a detailed description concerning any point, shall be regarded as meaning that only the best commercial practice is to prevail and that only material and workmanship of the finest quality shall be used. All interpretations of specifications shall be made on the basis of this statement. The Respondent should request clarification from the Entity as specified in this document.

## SECTION 4 – EVALUATION CRITERIA

**4.1 RESPONSIVENESS OF QUALIFICATIONS SUBMISSION:** **Pass/Fail**

Qualifications submission shall be responsive to all material requirements that shall enable the evaluation committee to evaluate responses in accordance with the evaluation criteria to make a recommendation to Officials of the Entity.

**4.2 FINANCIAL STABILITY OF RESPONDENT:** **Pass/Fail**

Financial stability of the Respondent to successfully undertake the project and the ability to ensure performance over the duration of the contract.

**4.3 TECHNICAL REQUIREMENTS:** **100 Points Total**

Extent to which the provided service or products meets the needs of the Entity, including, but not limited to, the criteria in the evaluation matrix and in the submission requirements section and as expressed in this document.

**4.4 EVALUATION CRITERIA:**

**Solicitation responses shall be evaluated in accordance with Part 200 of the Uniform Administrative Requirements, Cost Principles, and Audit Requirements. The Entity will make the selection on the basis of demonstrated competence and qualifications; and to a Respondent that provides a fair and reasonable price.**

The Entity evaluates the responses, prepares a Bid Tabulation sheet, determines the award on the basis of fair and reasonable pricing considered to be the Best Value to the Entity.

Only responses submitted in compliance with the **Schedule of Events + Response Requirements** section and meeting qualifications will be considered. Failure to submit the required information may be cause for rejection of the bid response. The Entity reserves the right to waive informalities and minor irregularities in bids received.

**Initial Compliance Screening**
The Entity will perform an initial screening of all solicitation responses received. Unsigned solicitation responses, and solicitation responses that do not meet the minimum qualifications above and/or do not include all required forms and information may be subject to rejection without further evaluation.

**Additional Evaluation Criteria**
All solicitations will be evaluated based on Responsiveness and Price. Responsiveness means adhering to the Terms and Conditions and specifications of the supplies requested.

***Evaluation Process:*** *The Entity's Evaluator(s) completes an evaluation of the submitted proposal using the criteria described below.* ***The proposal submitted must be a firm-fixed price.***

**EVALUATION CRITERIA**

| EVALUATION CRITERIA | SCORE |
|---|---|
| Responsiveness of Proposal | Pass/Fail |
| Financial Stability | Pass/Fail |
| Understanding of Work; Experience and Qualifications | 20 |
| Capacity to Perform, Delivery/Service Schedule, and References | 20 |
| Pricing | 60 |
| TOTAL SCORE | 100 |

## SECTION 5 – RESPONSE SUBMISSION REQUIREMENTS

This section details the requirements for submitting all required information. Respondents are advised to see **Schedule of Events + Response Requirements** on Page 4 of this document, and to carefully review all the requirements and submit all documents and information as indicated in this RFP. Additional information may be requested for clarification. Incomplete responses may lead to a submission being deemed nonresponsive and will not be considered.

To ensure some degree of uniformity in the submission, please follow the outline listed below.

### 5.1 STATEMENT OF INTEREST

The statement of interest should be limited to a maximum of two (2) pages and must include a brief introduction of the company, a statement of the Respondent's understanding of the work to be performed and that the company meets and will comply with the requirements set forth in this document.

### 5.2 EXPERIENCE AND RELEVANT QUALIFICATIONS

Respondent shall demonstrate related professional qualifications, experience, and knowledge similar to this scope of work. Response should include information similar in scope and size to the scope of work in this RFP. Limit to four (4) pages. Minimum submission shall address the following:

5.2.1 **Experience** – Respondents shall provide a concise narrative description of their firm's experience in services similar in size and scope to the requested scope of services. Describe any work performed in or for the Entity. Respondents shall provide descriptions of at least three (3) projects of similar size and scope to this Program. Projects should include project location, duration and project description and scope of work the Respondent performed.

5.2.2 **Relevant Qualifications** – Respondents must provide a brief summary to include total number and types of employees, skills, knowledge and abilities, company background history, and number of years in providing similar services as outlined in this document.

### 5.3 CAPACITY TO PERFORM

Respondent should state its firm commitment to provide goods or services within the prescribed delivery date and time.

5.3.1 **Work Capacity:** Respondent shall provide information to demonstrate capacity to perform requested work. Respondents shall provide a detailed typical schedule to show sequence of key work activities and the number of days to complete each task.

5.3.4 If applicable, **Bonding Capacity:** Respondent(s) shall provide proof of bonding capacity in a statement addressed to the Entity from a certified bonding company authorized to do business in the State of Texas. The letter must clearly state the amount of Firm's bonding capacity to be reserved for the Entity's projects. Firm shall carry a minimum bonding capacity of the project value upon execution of the Contract. The bond(s) must be made payable to the Entity. In your response, please provide a statement regarding your ability to provide proof of bonding as directed in the Exhibits that follow.

**5.4 FINANCIAL STABILITY**

Respondent shall provide a statement that includes the following:

5.4.1 A full disclosure of any events, liabilities, or contingent liabilities that could affect Respondent's financial ability to perform this contract; and

5.4.2 Other financial information sufficient for the Entity, in its sole judgement, to determine if Respondent is financially solvent or adequately capitalized.

**5.5 LEGAL ACTIONS**

Provide a list of all pending litigation and include a brief description of the reason for legal action (if applicable).

**5.6 PRICING**

5.6.1 Respondents shall complete and submit the Pricing Sheet (see **Attachment B**).

5.6.2 Prices for all goods and/or services shall be all inclusive. Pricing offered shall be valid for ninety (90) days from response due date.

5.6.3 The City of La Marque is exempt from taxes. DO NOT INCLUDE TAX IN YOUR PRICING SUBMITTAL.

5.6.4 Estimated Quantities – Quantities indicated are estimated based upon the best available information. The Entity reserves the right to increase or decrease the quantities by any amount deemed necessary to meet its needs without any adjustments in the bid price.

# LIST OF EXHIBITS

| | |
|---|---|
| EXHIBIT A | PROJECT SCOPE OF WORK |
| EXHIBIT B | REQUIRED CONTRACT PROVISIONS |
| EXHIBIT C | OTHER RELEVANT INFORMATION/SPECIAL CONDITIONS |

# EXHIBIT A – PROJECT SCOPE OF WORK

To be provided by the Entity

| Item | Description | Quantity | Unit of Measure |
|---|---|---|---|
| 1 | 2024 Mini Excavators | 2 | See Below |
| 2 | New Develon DX27Z-7 Cab Option | 2 | |
| 3 | New Develon DX27Z-7 Canopy Option | 2 | |
| 4 | | | |
| 5 | **DELIVERY LOCATION: Provide the Delivery Location** | 1500 Municipal Drive, La Marque, Texas 77568 | |
| 6 | **DELIVERY SCHEDULE: Provide the number of calendar days required for delivery after receipt of the order** | 90 days | |

**Basic Specifications:**

- Net horsepower at 2400 rpm shall be at least 23.6 hp (17.6 kW) according to ISO 9249
- SAE rated gross horsepower at 2400 rpm shall be at least 24.7 hp (18.4 kW)
- The machine must be CR (Compact Radius) with no overhang over the side of the tracks in the standard configuration (without counterweight)
- Operating weight with the cab option shall be at least 7,982 lb.
- Lift capacity max configuration without bucket fitted, blade down, and long stick shall be no less than 2,965 lb. (1,345kg) at 6'6" (2.0 m) reach and 0 ft (0 m) height over the front and no less than 2,965 lb. (1,345kg) at 6'6" (2.0 m) reach and 0 ft (0 m) height over side
- Maximum digging depth with a long stick shall be at least 10'2"
- Maximum digging height with a long stick shall be at least 16'5"
- Maximum reach with a long stick shall be at least 18'0"
- Height to top of cab shall be 8'1"
- Ground clearance shall not be less than 12.2"
- Transport width shall be 5'10" with 11.8" tracks
- Maximum vertical wall shall be no less that 7'10" with a long stick

**Engine:**

- Engine shall be US EPA Tier 4 Final compliant
- Machine shall be water cooled, 4 stroke
- Engine shall have automatic engine idle that automatically lowers engine revolutions when machine is not in use to save fuel
- Machine shall have sealed electrical connectors
- Water separator in fuel line shall be factory installed standard equipment
- Machine shall have adjustable automatic engine shutdown
- Machine shall have automatic swing break

- Machine shall be equipped with battery disconnect standard

**Power/Transmission:**

- Travel speed shall be at least 1.6 mph (2.6 km/h) in low and 2.8 mph (4.5 km/h) in high
- Traction force shall be at least 6,969 lbf (31.0 kn) in low and 3,799 lbf (16.9 kn) in high
- Factory installed, standard auto two speed which provides better fuel efficiency since the machine will automatically go into higher power/torque only when the system senses that it is required while dozing, counter rotating, and uphill travel

**Hydraulic System:**

- Machine shall have one variable displacement piston pump with an output of 26 gal/m (100 L/m) at 2400 rpm, designated for travel, boom, stick and bucket
- Equipment operating pressure shall be at least 3,553 psi (245 bar)
- Travel operating pressure shall be at let 3,553 psi (245 bar)
- Operating swing pressure shall be at least 2,625 psi (181 bar)
- Primary auxiliary circuit shall have an output of at least 18 gal/min
- Secondary auxiliary circuit shall have an output of at least 7.0 gal/min
- All fittings shall be of the O Ring Face Seal type for superior sealing against leaks
- Factory installed combined function (one-way/two-way) auxiliary high pressure hydraulic circuit shall be standard
- Auxiliary hydraulic valve shall be standard with hydraulic quick disconnects on the stick
- Machine shall be equipped with continuous auxiliary flow from factory
- Continuous flow must be able to be activated with flow in either direction and at any flow rate

**Undercarriage:**

- Track length shall be a minimum of 7'3"
- Machine shall have 11.8" rubber belt track standard from factory
- Ground pressure with 11.8" rubber belt shall be no more than 5.2 psi
- Machine equipped with fixed undercarriage available from factory, undercarriage with shall have a maximum width of 70.1"
- Machine shall come standard with tie down points on track frame

**Cab:**

- Machine shall have canopy option available from factory
- Machine shall come standard with interior cab lights with sealed pressurized cab
- Machine mut have adjustable auxiliary flow control for better controllability of attachments
- Pump flow shall decrease (auto-idle) when controls are in neutral for reduced fuel consumption and sound
- The rear window shall be able to be removed for escape in case of emergency
- Lower front window shall be able to be removed and secured within cab
- The cab door will be a hinged door design that has a mechanism that will lock the door I the open position
- Travel alarm shall be standard
- Machine shall have heat with variable temperature settings with sealed and pressurized cab available from factory
- Machine shall have multi-function capability of boom swing and upper body swing for extra machine versatility in tight areas

- Boom swing and upper body swing shall be able to be operated at the same time to maximize machine versatility and productivity
- Cab air conditioner shall have a primary filter that can be removed for inspection without any tools
- Machine shall have a 3" wide retractable seat belt as standard
- A 12-volt, 5-amp power supply with a cigar lighter type outlet shall be available for use of cell phones and two-way radios
- Machine shall have adjustable armrest that can be adjusted without tools
- Machine shall come standard with removable washable floormat
- Machine shall come standard with warning horn

**Boom / Stick:**

- The ability to order the machine with standard 49.6" or long stick 61.4" option shall be available
- Machine shall come standard with a swing boom
- Digging force with a standard stick shall be at least 4,249 lbs.
- Digging force with a long stick shall be at least 3,799 lbs.
- Bucket digging force shall be at least 7,419 lbs.
- Bucket rotation angle shall be 180 degrees
- Machine shall come with thumb ready from factory
- Machine shall have one piece boom 94.5"
- Machine shall come standard with boom light

**Blade:**

- Blade width shall be at least 70.1"
- Blade height shall be at least 13.8"
- Blade dig depth shall be at least 21.1"
- Blade lift height shall be at least 15.2"
- Dozer blade float shall be standard to give easy and fast site cleanup and leveling
- Blade shall come standard with bolt on cutting edge

**Swing System:**

- Machine swing speed shall be at least 9.0 rpm
- Machine boom left swing shall be at least 75 degrees
- Machine boom right swing shall be at least 50 degrees
- Machine shall have a spring applied, hydraulic release automatic swing break
- Machine shall have automatic swing break

**Work Tool Options:**

- Machine attachments shall come standard with pin on linkage
- A quick coupler system shall be available
- The hydraulic quick coupler must be able to be controlled from inside the cab

**Serviceability:**

- All daily maintenance areas shall be situated where they can be easily reached from ground level
- Machine shall come standard with a battery disconnect switch
- Fuse box shall be able to open without tools
- Scheduled oil sampling port for the main hydraulic system shall be provided for hydraulic oil to simplify sampling
- Radial seal air filter with double layered filter core shall be provided for better filtration

- Hydraulic system pressure taps shall be included for quick, easy, efficient, system diagnostics
- The engine fan guard shall fully enclose (360°) the engine fan
- An electronic priming fuel pump shall be standard
- Machine shall come standard with fuel water separator
- 24 Month / 2000-hour Manufacture warranty shall be standard

**Minimum Service Fill Capacities:**

- Fuel tank capacity shall not be less than 11.9 gal (45.0 L)
- Cooling system shall not hold less than 1.05 gal (4.0 L)
- Engine oil shall not hold less than 1.45 gal (5.5 L)
- Each final drive shall have a capacity of 0.16 gal (0.6 L)
- Hydraulic system shall not hold less than 9.2 gal (35.0 L)

**Owning / Operating Costs:**

- Factory-fill extended-life coolant with a minimum life of 12,000 hours, rated to -35° F (-37° C), shall be standard.
- Engine oil and filter shall have a recommended change interval of 500 hours
- Hydraulic system oil shall have a recommended change interval of 3000 hours

**Additional Features:**

- Machine boom and stick lowering check valve shall be available from factory
- 1st and 2nd Auxiliary lines shall be available from factory
- Water jacket heater shall be available from factory
- Machine LED front lights shall be available from factory
- Machine LED front and rear lights shall be available from factory
- Machine LED boom light shall be available from factory
- Machine mirrors left and right shall be available from factory
- Cab guarding shall be available from factory
- A rotating beacon shall be available from factory
- Machine shall come standard with two-point lifting
- 24" digging bucket with lift hooks attached to the back of bucket

**This project is being supported, in whole or in part, by the U.S. Department of the Treasury, in utilizing the U.S. Department of the Treasury Coronavirus State and Local Fiscal Recovery Funds (ARPA) program and is subject to all applicable Federal and State laws and regulations.**

# EXHIBIT B – ARPA REQUIRED PROVISIONS

CFR 200.327 Contract provisions. The Non-Federal entity's contracts should contain applicable provisions described in Appendix II to Part 200—Contract Provisions for Non-Federal Entity Contracts Under Federal Awards. The Non-Federal entity's contracts must contain the provisions described in Appendix II to Part 200—Contract Provisions for Non-Federal Entity Contracts Under Federal Awards, as applicable.

| THRESHOLD | PROVISION | CITATION | PROVISION APPLIES TO |
|---|---|---|---|
| | **2 CFR 200 Appendix II (A-L)** | | |
| >$250,000 (Simplified Acquisition Threshold) | Contracts for more than the simplified acquisition threshold, which is the inflation adjusted amount determined by the Civilian Agency Acquisition Council and the Defense Acquisition Regulations Council (Councils) as authorized by 41 U.S.C. 1908, must address administrative, contractual, or legal remedies in instances where contractors violate or breach contract terms, and provide for such sanctions and penalties as appropriate. | 2 CFR 200 APPENDIX II (A) | Contractor RFP/IFB Contractor RFQ Subrecipients |
| >$10,000 | All contracts in excess of $10,000 must address termination for cause and for convenience by the Non-Federal entity including the manner by which it will be affected and the basis for settlement. | 2 CFR 200 APPENDIX II (B) | Contractor RFP/IFB Contractor RFQ Subrecipients |
| None | Equal Employment Opportunity. Except as otherwise provided under 41 CFR Part 60, all contracts that meet the definition of "federally assisted construction contract" in 41 CFR Part 60-1.3 must include the equal opportunity clause provided under 41 CFR 60-1.4(b), in accordance with Executive Order 11246, "Equal Employment Opportunity" (30 FR 12319, 12935, 3 CFR Part, 1964-1965 Comp., p. 339), as amended by Executive Order 11375, "Amending Executive Order 11246 Relating to Equal Employment Opportunity," and implementing regulations at 41 CFR part 60, "Office of Federal Contract Compliance Programs, Equal Employment Opportunity, Department of Labor."<br>41 CFR 60-1.4 Equal opportunity clause.<br>(b) Federally assisted construction contracts. (1) Except as otherwise provided, each administering agency shall require the inclusion of the following language as a condition of any grant, contract, loan, insurance, or guarantee involving federally assisted construction which is not exempt from the requirements of the equal opportunity clause:<br>The [recipient] hereby agrees that it will incorporate or cause to be incorporated into any contract for construction work, or modification thereof, as defined in the regulations of the Secretary of Labor at 41 CFR Chapter 60, which is paid for in whole or in part with funds obtained from the Federal Government or borrowed on the credit of the Federal Government pursuant to a grant, contract, loan, insurance, or guarantee, or undertaken pursuant to any Federal program involving such grant, contract, loan, insurance, or guarantee, the following equal opportunity clause:<br>During the performance of this contract, the contractor agrees as follows:<br>(1) The contractor will not discriminate against any employee or applicant for employment because of race, color, religion, sex, sexual orientation, gender identity, or national origin. The contractor will take affirmative action to ensure that applicants are employed, and that employees are treated during employment without regard to their race, color, religion, sex, sexual orientation, gender identity, or national origin. Such action shall include, but not be limited to the following:<br>Employment, upgrading, demotion, or transfer; recruitment or recruitment advertising; layoff or termination; rates of pay or other forms of compensation; and selection for training, including apprenticeship. The contractor agrees to post in | 2 CFR 200 APPENDIX II (C) and 41 CFR §60-1.4(b) | Contractor RFP/IFB Contractor RFQ Subrecipients |

| THRESHOLD | PROVISION | CITATION | PROVISION APPLIES TO |
|---|---|---|---|
| | conspicuous places, available to employees and applicants for employment, notices to be provided setting forth the provisions of this nondiscrimination clause.<br>(2) The contractor will, in all solicitations or advertisements for employees placed by or on behalf of the contractor, state that all qualified applicants will receive consideration for employment without regard to race, color, religion, sex, sexual orientation, gender identity, or national origin.<br>(3) The contractor will not discharge or in any other manner discriminate against any employee or applicant for employment because such employee or applicant has inquired about, discussed, or disclosed the compensation of the employee or applicant or another employee or applicant. This provision shall not apply to instances in which an employee who has access to the compensation information of other employees or applicants as a part of such employee's essential job functions discloses the compensation of such other employees or applicants to individuals who do not otherwise have access to such information, unless such disclosure is in response to a formal complaint or charge, in furtherance of an investigation, proceeding, hearing, or action, including an investigation conducted by the employer, or is consistent with the contractor's legal duty to furnish information.<br>(4) The contractor will send to each labor union or representative of workers with which he has a collective bargaining agreement or other contract or understanding, a notice to be provided advising the said labor union or workers' representatives of the contractor's commitments under this section and shall post copies of the notice in conspicuous places available to employees and applicants for employment.<br>(5) The contractor will comply with all provisions of Executive Order 11246 of September 24, 1965, and of the rules, regulations, and relevant orders of the Secretary of Labor.<br>(6) The contractor will furnish all information and reports required by Executive Order 11246 of September 24, 1965, and by rules, regulations, and orders of the Secretary of Labor, or pursuant thereto, and will permit access to his books, records, and accounts by the administering agency and the Secretary of Labor for purposes of investigation to ascertain compliance with such rules, regulations, and orders.<br>(7) In the event of the contractor's noncompliance with the nondiscrimination clauses of this contract or with any of the said rules, regulations, or orders, this contract may be canceled, terminated, or suspended in whole or in part and the contractor may be declared ineligible for further Government contracts or federally assisted construction contracts in accordance with procedures authorized in Executive Order 11246 of September 24, 1965, and such other sanctions may be imposed and remedies invoked as provided in Executive Order 11246 of September 24, 1965, or by rule, regulation, or order of the Secretary of Labor, or as otherwise provided by law.<br>(8) The contractor will include the portion of the sentence immediately preceding paragraph (1) and the provisions of paragraphs (1) through (8) in every subcontract or purchase order unless exempted by rules, regulations, or orders of the Secretary of Labor issued pursuant to section 204 of Executive Order 11246 of September 24, 1965, so that such provisions will be binding upon each subcontractor or vendor. The contractor will take such action with respect to any subcontract or purchase order as the administering agency may direct as a means of enforcing such provisions, including sanctions for noncompliance:<br>Provided, however, that in the event a contractor becomes involved in, or is threatened with, litigation with a subcontractor or vendor as a result of such direction by the administering agency, the contractor may request the United States to enter into such litigation to protect the interests of the United States.<br>The [recipient] further agrees that it will be bound by the above equal opportunity clause with respect to its own employment practices when it participates in federally assisted construction work: Provided, that if the [recipient] so participating is a State or local government, the above equal opportunity clause is not applicable to any agency, instrumentality or subdivision of such government which does not participate in work on or under the contract. | | |

| THRESHOLD | PROVISION | CITATION | PROVISION APPLIES TO |
|---|---|---|---|
| | The [recipient] agrees that it will assist and cooperate actively with the administering agency and the Secretary of Labor in obtaining the compliance of contractors and subcontractors with the equal opportunity clause and the rules, regulations, and relevant orders of the Secretary of Labor, that it will furnish the administering agency and the Secretary of Labor such information as they may require for the supervision of such compliance, and that it will otherwise assist the recipient agency in the discharge of the agency's primary responsibility for securing compliance.<br><br>The recipient further agrees that it will refrain from entering into any contract or contract modification subject to Executive Order 11246 of September 24, 1965, with a contractor debarred from, or who has not demonstrated eligibility for, Government contracts and federally assisted construction contracts pursuant to the Executive Order and will carry out such sanctions and penalties for violation of the equal opportunity clause as may be imposed upon contractors and subcontractors by the administering agency or the Secretary of Labor pursuant to Part II, Subpart D of the Executive Order. In addition, the [recipient] agrees that if it fails or refuses to comply with these undertakings, the administering agency may take any or all of the following actions: cancel, terminate, or suspend in whole or in part this grant (contract, loan, insurance, guarantee); refrain from extending any further assistance to the [recipient] under the program with respect to which the failure or refund occurred until satisfactory assurance of future compliance has been received from such [recipient]; and refer the case to the Department of Justice for appropriate legal proceedings. | | |
| >$10,000,000 for ARPA but State Provision Applies at any amount and/or<br><br>>$2,000 for CDBG/Braided Funds Projects<br><br>See TX Prevailing Wage Laws | Davis-Bacon Act, as amended (40 U.S.C. 3141-3148). When required by Federal program legislation, all prime construction contracts in excess of $10,000,00 awarded by Non-Federal entities must include a provision for compliance with the Davis-Bacon Act (40 U.S.C. 3141-3144, and 3146-3148) as supplemented by Department of Labor regulations (29 CFR Part 5, "Labor Standards Provisions Applicable to Contracts Covering Federally Financed and Assisted Construction"). In accordance with the statute, contractors must be required to pay wages to laborers and mechanics at a rate not less than the prevailing wages specified in a wage determination made by the Secretary of Labor. In addition, contractors must be required to pay wages not less than once a week. The Non-Federal entity must place a copy of the current prevailing wage determination issued by the Department of Labor in each solicitation. The decision to award a contract or subcontract must be conditioned upon the acceptance of the wage determination. The Non-Federal entity must report all suspected or reported violations to the Federal awarding agency.<br><br>The contracts must also include a provision for compliance with the Copeland "Anti-Kickback" Act (40 U.S.C. 3145), as supplemented by Department of Labor regulations (29 CFR Part 3, "Contractors and Subcontractors on Public Building or Public Work Financed in Whole or in Part by Loans or Grants from the United States"). The Act provides that each contractor or subrecipient must be prohibited from inducing, by any means, any person employed in the construction, completion, or repair of public work, to give up any part of the compensation to which he or she is otherwise entitled. The Non-Federal entity must report all suspected or reported violations to the Federal awarding agency. | 2 CFR 200 APPENDIX II (D) | Contractor RFP/IFB<br><br>Subrecipients |
| >$100,000 | Contract Work Hours and Safety Standards Act (40 U.S.C. 3701-3708). Where applicable, all contracts awarded by the Non-Federal entity in excess of $100,000 that involve the employment of mechanics or laborers must include a provision for compliance with 40 U.S.C. 3702 and 3704, as supplemented by Department of Labor regulations (29 CFR Part 5). Under 40 U.S.C. 3702 of the Act, each contractor must be required to compute the wages of every mechanic and laborer on the basis of a standard work week of 40 hours. Work in excess of the standard work week is permissible provided that the worker is compensated at a rate of not less than one and a half times the basic rate of pay for all hours worked in excess of 40 hours in the work week. The requirements of 40 U.S.C. 3704 are applicable to construction work and provide that no laborer or mechanic must be required to work in surroundings | 2 CFR 200 APPENDIX II (E) | Contractor RFP/IFB<br><br>Subrecipients |

| THRESHOLD | PROVISION | CITATION | PROVISION APPLIES TO |
|---|---|---|---|
| | or under working conditions which are unsanitary, hazardous, or dangerous. These requirements do not apply to the purchases of supplies or materials or articles ordinarily available on the open market, or contracts for transportation or transmission of intelligence. | | |
| None | Rights to Inventions Made Under a Contract or Agreement. If the Federal award meets the definition of "funding agreement" under 37 CFR § 401.2 (a) and the recipient or subrecipient wishes to enter into a contract with a small business firm or nonprofit organization regarding the substitution of parties, assignment or performance of experimental, developmental, or research work under that "funding agreement," the recipient or subrecipient must comply with the requirements of 37 CFR Part 401, "Rights to Inventions Made by Nonprofit Organizations and Small Business Firms Under Government Grants, Contracts and Cooperative Agreements," and any implementing regulations issued by the awarding agency. | 2 CFR 200 APPENDIX II (F) | Contractor RFP/IFB<br>Contractor RFQ<br>Subrecipients |
| >$150,000 | Clean Air Act (42 U.S.C. 7401-7671q.) and the Federal Water Pollution Control Act (33 U.S.C. 1251-1387), as amended – Contracts and subgrants of amounts in excess of $150,000 must contain a provision that requires the Non-Federal award to agree to comply with all applicable standards, orders or regulations issued pursuant to the Clean Air Act (42 U.S.C. 7401-7671q) and the Federal Water Pollution Control Act as amended (33 U.S.C. 1251-1387). Violations must be reported to the Federal awarding agency and the Regional Office of the Environmental Protection Agency (EPA). | 2 CFR 200 APPENDIX II (G) | Contractor RFP/IFB<br>Contractor RFQ<br>Subrecipients |
| >$25,000 | Debarment and Suspension (Executive Orders 12549 and 12689) – A contract award (see 2 CFR 180.220) must not be made to parties listed on the governmentwide exclusions in the System for Award Management (SAM), in accordance with the OMB guidelines at 2 CFR 180 that implement Executive Orders 12549 (3 CFR part 1986 Comp., p. 189) and 12689 (3 CFR part 1989 Comp., p. 235), "Debarment and Suspension." SAM Exclusions contains the names of parties debarred, suspended, or otherwise excluded by agencies, as well as parties declared ineligible under statutory or regulatory authority other than Executive Order 12549. | 2 CFR 200 APPENDIX II (H) | Contractor RFP/IFB<br>Contractor RFQ<br>Subrecipients<br>Vendors |
| >$100,000 | Byrd Anti-Lobbying Amendment (31 U.S.C. 1352) – Contractors that apply or bid for an award exceeding $100,000 must file the required certification. Each tier certifies to the tier above that it will not and has not used Federal appropriated funds to pay any person or organization for influencing or attempting to influence an officer or employee of any agency, a member of Congress, officer or employee of Congress, or an employee of a member of Congress in connection with obtaining any Federal contract, grant or any other award covered by 31 U.S.C. 1352. Each tier must also disclose any lobbying with Non-Federal funds that takes place in connection with obtaining any Federal award. Such disclosures are forwarded from tier to tier up to the Non-Federal award. | 2 CFR 200 APPENDIX II (I) and 24 CFR §570.303 | Contractor RFP/IFB<br>Contractor RFQ<br>Subrecipients |

| THRESHOLD | PROVISION | CITATION | PROVISION APPLIES TO |
|---|---|---|---|
| | See 2 CFR §200.323 - Procurement of Recovered Materials.<br><br>Where applicable, in the performance of contract, pursuant to 2 CFR 200.323, the contractor must comply with section 6002 of the Solid Waste Disposal Act, as amended by the Resource Conservation and Recovery Act. The requirements of Section 6002 include procuring only items designated in guidelines of the Environmental Protection Agency (EPA) at 40 CFR part 247 that contain the highest percentage of recovered materials practicable, consistent with maintaining a satisfactory level of competition, where the purchase price of the item exceeds $10,000 or the value of the quantity acquired during the preceding fiscal year exceeded $10,000; procuring solid waste management services in a manner that maximizes energy and resource recovery; and establishing an affirmative procurement program for procurement of recovered materials identified in the EPA guidelines.<br><br>To the extent that the scope of work or specifications in the contract requires the contractor to provide recovered materials the scope of work or specifications are modified to require that as follows.<br><br>i. In the performance of this contract, the Contractor shall make maximum use of products containing recovered materials that are EPA-designated items unless the product cannot be acquired—<br>1. Competitively within a timeframe providing for compliance with the contract performance schedule;<br>2. Meeting contract performance requirements; or<br>3. At a reasonable price.<br>ii. Information about this requirement, along with the list of EPA-designated items, is available at EPA's Comprehensive Procurement Guidelines web site, https://www.epa.gov/smm/comprehensive-procurement-guideline-cpg-program.<br>iii. The Contractor also agrees to comply with all other applicable requirements of Section 6002 of the "Solid Waste Disposal Act." | 2 CFR 200<br>APPENDIX II (J) | Contractor RFP/IFB<br>Contractor RFQ<br>Subrecipients |
| | See 2 CFR §200.216 - Prohibition on certain telecommunications and video surveillance services or equipment<br><br>(a) Recipients and subrecipients are prohibited from obligating or expending loan or grant funds to:<br>(1) Procure or obtain;<br>(2) Extend or renew a contract to procure or obtain; or<br>(3) Enter into a contract (or extend or renew a contract) to procure or obtain equipment, services, or systems that uses covered telecommunications equipment or services as a substantial or essential component of any system, or as critical technology as part of any system. As described in Public Law 115-232, section 889, covered telecommunications equipment is telecommunications equipment produced by Huawei Technologies Company or ZTE Corporation (or any subsidiary or affiliate of such entities).<br>(i) For the purpose of public safety, security of government facilities, physical security surveillance of critical infrastructure, and other national security purposes, video surveillance and telecommunications equipment produced by Hytera Communications Corporation, Hangzhou Hikvision Digital Technology Company, or Dahua Technology Company (or any subsidiary or affiliate of such entities).<br>(ii) Telecommunications or video surveillance services provided by such entities or using such equipment.<br>(iii) Telecommunications or video surveillance equipment or services produced or provided by an entity that the Secretary of Defense, in consultation with the Director of the National Intelligence or the Director of the Federal Bureau of Investigation, reasonably believes to be an entity | 2 CFR 200<br>APPENDIX II (K) | Contractor RFP/IFB<br>Contractor RFQ<br>Subrecipients |

| THRESHOLD | PROVISION | CITATION | PROVISION APPLIES TO |
|---|---|---|---|
| | owned or controlled by, or otherwise connected to, the government of a covered foreign country.<br>(b) In implementing the prohibition under Public Law 115-232, section 889, subsection (f), paragraph (1), heads of executive agencies administering loan, grant, or subsidy programs shall prioritize available funding and technical support to assist affected businesses, institutions and organizations as is reasonably necessary for those affected entities to transition from covered communications equipment and services, to procure replacement equipment and services, and to ensure that communications service to users and customers is sustained.<br>(c) See Public Law 115-232, section 889 for additional information.<br>(d) See also § 200.471. | | |
| | See 2 CFR §200.322 - Domestic Preferences for Procurements.<br><br>(a) As appropriate and to the extent consistent with law, the Non-Federal entity should, to the greatest extent practicable under a Federal award, provide a preference for the purchase, acquisition, or use of goods, products, or materials produced in the United States (including but not limited to iron, aluminum, steel, cement, and other manufactured products). The requirements of this section must be included in all subawards including all contracts and purchase orders for work or products under this award.<br><br>(b) For purposes of this section:<br>(1) "Produced in the United States" means, for iron and steel products, that all manufacturing processes, from the initial melting stage through the application of coatings, occurred in the United States.<br>(2) "Manufactured products" means items and construction materials composed in whole or in part of non-ferrous metals such as aluminum; plastics and polymer-based products such as polyvinyl chloride pipe; aggregates such as concrete; glass, including optical fiber; and lumber. | 2 CFR 200 APPENDIX II (L) | Contractor RFP/IFB<br>Contractor RFQ<br>Subrecipients |
| | **Additional 2 CFR 200 references & Other Regulations** | | |
| None | The Federal awarding agency must establish conflict of interest policies for Federal awards. The Non-Federal entity must disclose in writing any potential conflict of interest to the Federal awarding agency or pass-through entity in accordance with applicable Federal awarding agency policy. | 2 CFR 200.112 | Contractor RFP/IFB<br>Contractor RFQ<br>Subrecipients |
| None | Contracting with HUB, small and minority businesses, women's business enterprises, and labor surplus area firms.<br>(a) The Non-Federal entity must take all necessary affirmative steps to assure that minority businesses, women's business enterprises, and labor surplus area firms are used when possible.<br>(b) Affirmative steps must include:<br>(1) Placing qualified small and minority businesses and women's business enterprises on solicitation lists;<br>(2) Assuring that small and minority businesses, and women's business enterprises are solicited whenever they are potential sources;<br>(3) Dividing total requirements, when economically feasible, into smaller tasks or quantities to permit maximum participation by small and minority businesses, and women's business enterprises;<br>(4) Establishing delivery schedules, where the requirement permits, which encourage participation by small and minority businesses, and women's | 2 CFR 200.321 | Contractor RFP/IFB<br>Contractor RFQ<br>Subrecipients |

| THRESHOLD | PROVISION | CITATION | PROVISION APPLIES TO |
|---|---|---|---|
| | business enterprises;<br>(5) Using the services and assistance, as appropriate, of such organizations as the Small Business Administration and the Minority Business Development Agency of the Department of Commerce; and<br>(6) Requiring the prime contractor, if subcontracts are to be let, to take the affirmative steps listed in paragraphs (b)(1) through (5) of this section. | | |
| >$10,000 | An NFE (Non-Federal Entity) that is a state agency or an agency of a political subdivision of a state, and the NFE's contractors must comply with Section 6002 of the Solid Waste Disposal Act.<br>Applicable NFEs must include a contract provision requiring compliance with this requirement.<br>This includes contracts awarded by a state agency or political subdivision of a state and its contractors for certain items, as designated by the EPA, with a purchase price greater than $10,000.<br>Indian Tribal Governments and nonprofit organizations are not required to comply with this provision. Additional requirements are listed below. | 2 CFR 200.323 | Contractor RFP/IFB<br>Contractor RFQ<br>Subrecipients |
| None | Financial records, supporting documents, statistical records, and all other Non-Federal entity records pertinent to a Federal award must be retained for a period of three years from the date of submission of the final expenditure report or, for Federal awards that are renewed quarterly or annually, from the date of the submission of the quarterly or annual financial report, respectively, as reported to the Federal awarding agency or pass-through entity in the case of a subrecipient. Federal awarding agencies and pass-through entities must not impose any other record retention requirements upon Non-Federal entities. **All records related to ARPA shall be maintained for 5 years per the ARPA terms, conditions, and regulations.** The only exceptions are the following:<br>(a) If any litigation, claim, or audit is started before the expiration of the 3-year period, the records must be retained until all litigation, claims, or audit findings involving the records have been resolved and final action taken. **All records related to ARPA shall be maintained for 5 years per the ARPA terms, conditions, and regulations.**<br>(b) When the Non-Federal entity is notified in writing by the Federal awarding agency, cognizant agency for audit, oversight agency for audit, cognizant agency for indirect costs, or pass-through entity to extend the retention period.<br>(c) Records for real property and equipment acquired with Federal funds must be retained for 3 years after final disposition. All records related to ARPA shall be maintained for 5 years per the ARPA terms and conditions and regulations.<br>(d) When records are transferred to or maintained by the Federal awarding agency or pass-through entity, the 3-year retention requirement is not applicable to the Non-Federal entity All records related to ARPA shall be maintained for 5 years per the ARPA terms and conditions and regulations. **All records related to ARPA shall be maintained for 5 years per the ARPA terms, conditions, and regulations.**<br>(e) Records for program income transactions after the period of performance. In some cases, recipients must report program income after the period of performance. Where there is such a requirement, the retention period for the records pertaining to the earning of the program income starts from the end of the Non-Federal entity's fiscal year in which the program income is earned.<br>(f) Indirect cost rate proposals and cost allocations plans. This paragraph applies to the following types of documents and their supporting records: Indirect cost rate computations or proposals, cost allocation plans, and any similar accounting computations of the rate at which a particular group of costs is chargeable (such as computer usage chargeback rates or composite fringe benefit rates).<br>(1) *If submitted for negotiation.* If the proposal, plan, or other computation is | 2 CFR 200.334 | Contractor RFP/IFB<br>Contractor RFQ<br>Subrecipients<br>Vendors |

| THRESHOLD | PROVISION | CITATION | PROVISION APPLIES TO |
|---|---|---|---|
| | required to be submitted to the Federal Government (or to the pass-through entity) to form the basis for negotiation of the rate, then the 3-year retention period for its supporting records starts from the date of such submission. **All records related to ARPA shall be maintained for 5 years per the ARPA terms, conditions, and regulations.**<br><br>(2) *If not submitted for negotiation.* If the proposal, plan, or other computation is not required to be submitted to the Federal Government (or to the pass-through entity) for negotiation purposes, then the 3-year retention period for the proposal, plan, or computation and its supporting records starts from the end of the fiscal year (or other accounting period) covered by the proposal, plan, or other computation. **All records related to ARPA shall be maintained for 5 years per the ARPA terms, conditions, and regulations.** | | |
| None | The Federal awarding agency and the Non-Federal entity should, whenever practicable, collect, transmit, and store Federal award-related information in open and machine-readable formats rather than in closed formats or on paper in accordance with applicable legislative requirements. A machine-readable format is a format in a standard computer language (not English text) that can be read automatically by a web browser or computer system. The Federal awarding agency or pass-through entity must always provide or accept paper versions of Federal award-related information to and from the Non-Federal entity upon request. If paper copies are submitted, the Federal awarding agency or pass-through entity must not require more than an original and two copies. When original records are electronic and cannot be altered, there is no need to create and retain paper copies. When original records are paper, electronic versions may be substituted through the use of duplication or other forms of electronic media provided that they are subject to periodic quality control reviews, provide reasonable safeguards against alteration, and remain readable. | 2 CFR 200.336 | Contractor RFP/IFB<br>Contractor RFQ<br>Subrecipients |
| None | CONTRACTS WITH COMPANIES ENGAGED IN BUSINESS WITH IRAN, SUDAN, OR FOREIGN TERRORIST ORGANIZATION PROHIBITED. A governmental entity may not enter into a governmental contract with a company that is identified on a list prepared and maintained under Section 806.051, 807.051, or 2252.153. The term "foreign terrorist organization" in this paragraph has the meaning assigned to such a term in Section 2252.151(2) of the Texas Government Code. | Texas Government Code 2252.152 | Contractor RFP/IFB<br>Contractor RFQ<br>Subrecipients |
| >$100,000 | PROVISION REQUIRED IN CONTRACT.<br>(a) This section applies only to a contract that:<br>(1) is between a governmental entity and a company with 10 or more full-time employees; and<br>(2) has a value of $100,000 or more that is to be paid wholly or partly from public funds of the governmental entity.<br>(b) A governmental entity may not enter into a contract with a company for goods or services unless the contract contains a written verification from the company that it:<br>(1) does not boycott Israel; and<br>(2) will not boycott Israel during the term of the contract. | Texas Government Code 2271 | Contractor RFP/IFB<br>Contractor RFQ<br>Subrecipients<br>Vendors |
| For Critical Infrastructure Projects | PROHIBITION ON CONTRACTS WITH CERTAIN FOREIGN-OWNED COMPANIES IN CONNECTION WITH CRITICAL INFRASTRUCTURE.<br>PROHIBITED CONTRACTS.<br>(a) A governmental entity may not enter into a contract or other agreement relating to critical infrastructure in this state with a company:<br>(1) if, under the contract or other agreement, the company would be granted direct or remote access to or control of critical infrastructure in this state, excluding access specifically allowed by the governmental entity for product | Texas Government Code, Title 10, Subtitle F, Chapter 2274.0102 | Subrecipients<br>EC 6.1 Awardees |

| THRESHOLD | PROVISION | CITATION | PROVISION APPLIES TO |
|---|---|---|---|
| | warranty and support purposes; and<br>(2) if the governmental entity knows that the company is:<br>(A) owned by or the majority of stock or other ownership interest of the company is held or controlled by:<br>(i) individuals who are citizens of China, Iran, North Korea, Russia, or a designated country; or<br>(ii) a company or other entity, including a governmental entity, that is owned or controlled by citizens of or is directly controlled by the government of China, Iran, North Korea, Russia, or a designated country; or<br>(B) headquartered in China, Iran, North Korea, Russia, or a designated country.<br>(b) The prohibition described by Subsection (a) applies regardless of whether:<br>(1) the company's or its parent company's securities are publicly traded; or<br>(2) the company or its parent company is listed on a public stock exchange as:<br>(A) a Chinese, Iranian, North Korean, or Russian company; or<br>(B) a company of a designated country. | | |
| None | Mandatory standards and policies relating to energy efficiency which are contained in the state energy conservation plan issued in compliance with the Energy Policy and Conservation Act. | 42 U.S.C. 6201 | Contractor RFP/IFB<br>Subrecipients |
| None | The Firm agrees that no otherwise qualified individual with disabilities shall, solely by reason of his/her disability, be denied the benefits of, or be subjected to discrimination, including discrimination in employment, under any program or activity receiving federal financial assistance. | Section 504 of the Rehabilitation Act of 1973, as amended. | Subrecipients |
| | **ARPA Terms & Conditions** | | |
| ARPA Terms, Conditions, & Records | 1. Use of Funds.<br>a. Recipient understands and agrees that the funds disbursed under this award may only be used in compliance with section 603(c) of the Social Security Act (the Act), Treasury's regulations implementing that section, and guidance issued by Treasury regarding the foregoing.<br>b. Recipient will determine prior to engaging in any project using this assistance that it has the institutional, managerial, and financial capability to ensure proper planning, management, and completion of such project. | Section 9901 of the American Rescue Plan Act, Pub. L. No. 117-2;<br>Section 602(b), 603(b) and/or 603(c) as applicable | Subrecipients |
| ARPA Terms, Conditions, & Records | 2. Period of Performance. The period of performance for this award begins on the date hereof and ends on December 31, 2026. As set forth in Treasury's implementing regulations, Recipients may use award funds to cover eligible costs incurred during the period that begins on March 3, 2021, and ends on December 31, 2024. | Section 9901 of the American Rescue Plan Act, Pub. L. No. 117-2;<br>Section 602(b), 603(b) and/or 603(c) as applicable | Subrecipients |
| ARPA Terms, Conditions, & Records | 3. Reporting. Recipient agrees to comply with any reporting obligations established by Treasury as they relate to this award. | Section 9901 of the American Rescue Plan Act, Pub. L. No. 117-2;<br>Section 602(b), 603(b) and/or 603(c) as applicable | Subrecipients |

| THRESHOLD | PROVISION | CITATION | PROVISION APPLIES TO |
|---|---|---|---|
| ARPA Terms, Conditions, & Records | 4. Maintenance of and Access to Records<br>a. Recipient shall maintain records and financial documents sufficient to evidence compliance with section 603(c) of the Act, Treasury's regulations implementing that section, and guidance issued by Treasury regarding the foregoing.<br>b. The Treasury Office of Inspector General and the Government Accountability Office, or their authorized representatives, shall have the right of access to records (electronic and otherwise) of Recipient in order to conduct audits or other investigations.<br>c. Records shall be maintained by Recipient for a period of five (5) years after all funds have been expended or returned to Treasury, whichever is later. | Section 9901 of the American Rescue Plan Act, Pub. L. No. 117-2;<br>Section 602(b), 603(b) and/or 603(c) as applicable | Contractor RFP/IFB<br>Contractor RFQ<br>Subrecipients<br>Vendors |
| ARPA Terms, Conditions, & Records | 5. Pre-award Costs. Pre-award costs, as defined in 2 CFR § 200.458, may not be paid with funding from this award. | Section 9901 of the American Rescue Plan Act, Pub. L. No. 117-2;<br>Section 602(b), 603(b) and/or 603(c) as applicable | Subrecipients |
| ARPA Terms, Conditions, & Records | 6. Administrative Costs. Recipient may use funds provided under this award to cover both direct and indirect costs. | Section 9901 of the American Rescue Plan Act, Pub. L. No. 117-2;<br>Section 602(b), 603(b) and/or 603(c) as applicable | Subrecipients |
| ARPA Terms, Conditions, & Records | 7. Cost Sharing. Cost sharing or matching funds are not required to be provided by Recipient. | Section 9901 of the American Rescue Plan Act, Pub. L. No. 117-2;<br>Section 602(b), 603(b) and/or 603(c) as applicable | Subrecipients |
| ARPA Terms, Conditions, & Records | 8. Conflicts of Interest. Recipient understands and agrees it must maintain a conflict of interest policy consistent with 2 CFR § 200.318(c) and that such conflict of interest policy is applicable to each activity funded under this award. Recipient and subrecipients must disclose in writing to Treasury or the pass-through entity, as appropriate, any potential conflict of interest affecting the awarded funds in accordance with 2 CFR § 200.112. | Section 9901 of the American Rescue Plan Act, Pub. L. No. 117-2;<br>Section 602(b), 603(b) and/or 603(c) as applicable | Contractor RFP/IFB<br>Contractor RFQ<br>Subrecipients<br>Vendors |
| ARPA Terms, Conditions, & Records | 9. Compliance with Applicable Law and Regulations.<br>a. Recipient agrees to comply with the requirements of section 603 of the Act, regulations adopted by Treasury pursuant to section 603(f) of the Act, and guidance issued by Treasury regarding the foregoing. Recipient also agrees to comply with all other applicable federal statutes, regulations, and executive orders, and Recipient shall provide for such compliance by other parties in any agreements it enters into with other parties relating to this award.<br>b. Federal regulations applicable to this award include, without limitation, the following:<br>i. Uniform Administrative Requirements, Cost Principles, and Audit Requirements for Federal Awards, 2 CFR Part 200, other than such provisions as Treasury may determine are inapplicable to this Award and subject to such exceptions as may be otherwise provided by Treasury. Subpart F – Audit Requirements of the Uniform Guidance, implementing the Single Audit Act, shall apply to this award.<br>ii. Universal Identifier and System for Award Management (SAM), 2 CFR Part 25, pursuant to which the award term set forth in Appendix A to 2 CFR Part 25 is | Section 9901 of the American Rescue Plan Act, Pub. L. No. 117-2;<br>Section 602(b), 603(b) and/or 603(c) as applicable | Contractor RFP/IFB<br>Contractor RFQ<br>Subrecipients<br>Vendors |

| THRESHOLD | PROVISION | CITATION | PROVISION APPLIES TO |
|---|---|---|---|
| | hereby incorporated by reference.<br>iii. Reporting Subaward and Executive Compensation Information, 2 CFR Part 170, pursuant to which the award term set forth in Appendix A to 2 CFR Part 170 is hereby incorporated by reference.<br>iv. OMB Guidelines to Agencies on Governmentwide Debarment and Suspension (Non-procurement), 2 CFR Part 180, including the requirement to include a term or condition in all lower tier covered transactions (contracts and subcontracts described in 2 CFR Part 180, subpart B) that the award is subject to 2 CFR Part 180 and Treasury's implementing regulation at 31 CFR Part 19.<br>v. Recipient Integrity and Performance Matters, pursuant to which the award term set forth in 2 CFR Part 200, Appendix XII to Part 200 is hereby incorporated by reference.<br>vi. Governmentwide Requirements for Drug-Free Workplace, 31 CFR Part 20.<br>vii. New Restrictions on Lobbying, 31 CFR Part 21.<br>viii. Uniform Relocation Assistance and Real Property Acquisitions Act of 1970 (42 U.S.C. §§ 4601-4655) and implementing regulations.<br>ix. Generally applicable federal environmental laws and regulations.<br><br>c. Statutes and regulations prohibiting discrimination applicable to this award include, without limitation, the following:<br>i. Title VI of the Civil Rights Act of 1964 (42 U.S.C. §§ 2000d et seq.) and Treasury's implementing regulations at 31 CFR Part 22, which prohibit discrimination on the basis of race, color, or national origin under programs or activities receiving federal financial assistance;<br>ii. The Fair Housing Act, Title VIII of the Civil Rights Act of 1968 (42 U.S.C. §§ 3601 et seq.), which prohibits discrimination in housing on the basis of race, color, religion, national origin, sex, familial status, or disability;<br>iii. Section 504 of the Rehabilitation Act of 1973, as amended (29 U.S.C. § 794), which prohibits discrimination on the basis of disability under any program or activity receiving federal financial assistance;<br>iv. The Age Discrimination Act of 1975, as amended (42 U.S.C. §§ 6101 et seq.), and Treasury's implementing regulations at 31 CFR Part 23, which prohibit discrimination on the basis of age in programs or activities receiving federal financial assistance; and<br>v. Title II of the Americans with Disabilities Act of 1990, as amended (42 U.S.C. §§ 12101 et seq.), which prohibits discrimination on the basis of disability under programs, activities, and services provided or made available by state and local governments or instrumentalities or agencies thereto. | | |
| ARPA Terms, Conditions, & Records | 10. Remedial Actions. In the event of Recipient's noncompliance with section 603 of the Act, other applicable laws, Treasury's implementing regulations, guidance, or any reporting or other program requirements, Treasury may impose additional conditions on the receipt of a subsequent tranche of future award funds, if any, or take other available remedies as set forth in 2 CFR § 200.339. In the case of a violation of section 603(c) of the Act regarding the use of funds, previous payments shall be subject to recoupment as provided in section 603(e) of the Act. | Section 9901 of the American Rescue Plan Act, Pub. L. No. 117-2;<br>Section 602(b), 603(b) and/or 603(c) as applicable | Subrecipients |
| ARPA Terms, Conditions, & Records | 11. Hatch Act. Recipient agrees to comply, as applicable, with requirements of the Hatch Act (5 U.S.C. §§ 1501-1508 and 7324-7328), which limit certain political activities of State or local government employees whose principal employment is in connection with an activity financed in whole or in part by this federal assistance. | Section 9901 of the American Rescue Plan Act, Pub. L. No. 117-2;<br>Section 602(b), 603(b) and/or 603(c) as applicable | Subrecipients |
| ARPA Terms, Conditions, & Records | 12. False Statements. Recipient understands that making false statements or claims in connection with this award is a violation of federal law and may result in criminal, civil, or administrative sanctions, including fines, imprisonment, civil damages and penalties, debarment from participating in federal awards or | Section 9901 of the American Rescue Plan Act, Pub. L. No. 117-2; | Contractor RFP/IFB<br>Contractor RFQ<br>Subrecipients<br>Vendors |

| THRESHOLD | PROVISION | CITATION | PROVISION APPLIES TO |
|---|---|---|---|
| | contracts, and/or any other remedy available by law. | Section 602(b), 603(b) and/or 603(c) as applicable | |
| ARPA Terms, Conditions, & Records | 13. Publications. Any publications produced with funds from this award must display the following language: "This project [is being] [was] supported, in whole or in part, by federal award number [enter project FAIN] awarded to [name of Recipient] by the U.S. Department of the Treasury." | Section 9901 of the American Rescue Plan Act, Pub. L. No. 117-2; Section 602(b), 603(b) and/or 603(c) as applicable | Subrecipients |
| ARPA Terms, Conditions, & Records | 14. Debts Owed the Federal Government.<br>a. Any funds paid to Recipient (1) in excess of the amount to which Recipient is finally determined to be authorized to retain under the terms of this award; (2) that are determined by the Treasury Office of Inspector General to have been misused; or (3) that are determined by Treasury to be subject to a repayment obligation pursuant to section 603(e) of the Act and have not been repaid by Recipient shall constitute a debt to the federal government.<br>b. Any debts determined to be owed the federal government must be paid promptly by Recipient. A debt is delinquent if it has not been paid by the date specified in Treasury's initial written demand for payment, unless other satisfactory arrangements have been made or if the Recipient knowingly or improperly retains funds that are a debt as defined in paragraph 14(a). Treasury will take any actions available to it to collect such a debt. | Section 9901 of the American Rescue Plan Act, Pub. L. No. 117-2; Section 602(b), 603(b) and/or 603(c) as applicable | Subrecipients |
| ARPA Terms, Conditions, & Records | 15. Disclaimer.<br>a. The United States expressly disclaims any and all responsibility or liability to Recipient or third persons for the actions of Recipient or third persons resulting in death, bodily injury, property damages, or any other losses resulting in any way from the performance of this award or any other losses resulting in any way from the performance of this award or any contract, or subcontract under this award.<br>b. The acceptance of this award by Recipient does not in any way establish an agency relationship between the United States and Recipient. | Section 9901 of the American Rescue Plan Act, Pub. L. No. 117-2; Section 602(b), 603(b) and/or 603(c) as applicable | Subrecipients |
| ARPA Terms, Conditions, & Records | 16. Protections for Whistleblowers.<br>a. In accordance with 41 U.S.C. § 4712, Recipient may not discharge, demote, or otherwise discriminate against an employee in reprisal for disclosing to any of the list of persons or entities provided below, information that the employee reasonably believes is evidence of gross mismanagement of a federal contract or grant, a gross waste of federal funds, an abuse of authority relating to a federal contract or grant, a substantial and specific danger to public health or safety, or a violation of law, rule, or regulation related to a federal contract (including the competition for or negotiation of a contract) or grant.<br>b. The list of persons and entities referenced in the paragraph above includes the following:<br>i. A member of Congress or a representative of a committee of Congress;<br>ii. An Inspector General;<br>iii. The Government Accountability Office;<br>iv. A Treasury employee responsible for contract or grant oversight or management;<br>v. An authorized official of the Department of Justice or other law enforcement agency;<br>vi. A court or grand jury; or<br>vii. A management official or other employee of Recipient, contractor, or subcontractor who has the responsibility to investigate, discover, or address misconduct. | Section 9901 of the American Rescue Plan Act, Pub. L. No. 117-2; Section 602(b), 603(b) and/or 603(c) as applicable | Contractor RFP/IFB<br>Contractor RFQ<br>Subrecipients<br>Vendors |

| THRESHOLD | PROVISION | CITATION | PROVISION APPLIES TO |
|---|---|---|---|
| | c. Recipient shall inform its employees in writing of the rights and remedies provided under this section, in the predominant native language of the workforce. | | |
| ARPA Terms, Conditions, & Records | 17. Increasing Seat Belt Use in the United States. Pursuant to Executive Order 13043, 62 FR 19217 (Apr. 18, 1997), Recipient should encourage its contractors to adopt and enforce on-the-job seat belt policies and programs for their employees when operating company-owned, rented or personally owned vehicles. | Section 9901 of the American Rescue Plan Act, Pub. L. No. 117-2; Section 602(b), 603(b) and/or 603(c) as applicable | Contractor RFP/IFB<br>Contractor RFQ<br>Subrecipients<br>Vendors |
| ARPA Terms, Conditions, & Records | 18. Reducing Text Messaging While Driving. Pursuant to Executive Order 13513, 74 FR 51225 (Oct. 6, 2009), Recipient should encourage its employees, subrecipients, and contractors to adopt and enforce policies that ban text messaging while driving, and Recipient should establish workplace safety policies to decrease accidents caused by distracted drivers | Section 9901 of the American Rescue Plan Act, Pub. L. No. 117-2; Section 602(b), 603(b) and/or 603(c) as applicable | Contractor RFP/IFB<br>Contractor RFQ<br>Subrecipients<br>Vendors |

# EXHIBIT C – OTHER RELEVANT INFORMATION/SPECIAL CONDITIONS

Attach any relevant specifications, e.g., municipal/state code specifications, etc., that will be applicable to this purchase.

SEE ATTACHMENTS

# DEVELON

## Mini Excavator

# DX27Z-7



### Engine

| | |
|---|---|
| Make | DEVELON |
| Model | DN1.7 |
| Number of cylinders | 3 |
| Rated power, gross (hp per SAE J1995) | 24.7 hp (18.4 kW) @ 2400 rpm |
| Rated power, net (hp per SAE J1349) | 24 hp (17.9 kW) @ 2400 rpm |
| Max. torque, net (SAE J1995) | 72.0 lbf·ft. (9.9 kgf·m) @ 1600 rpm |
| Displacement | 101.0 in.$^3$ (1.65 L) |
| Bore and stroke | 3.4" x 3.6" (87 mm x 92.4 mm) |
| Starter | 12 V, 2.3 hp (1.7 kW) |
| Battery | 12 V, 55 AH |
| Alternator | 13.5 V, 75 A |
| Air cleaner | Double elements |

### Hydraulics

| | |
|---|---|
| Main pumps | 2 x 7.6 gpm (29.0 L/min.) |
| Pilot pump (gear design) | 3.0 gpm (11.0 L/min.) |
| Relief pressure | 3408.0 psi (240.0 kg/cm$^2$) |

### Maximum System Pressure

| | |
|---|---|
| Boom/arm/bucket (normal mode) | 3129.0 psi (220.0 kg/cm$^2$) |
| Swing (crossover relief) | 2418.0 psi (170.0 kg/cm$^2$) |

### Undercarriage

| | |
|---|---|
| Upper rollers (each track) | 1 |
| Lower rollers (each track) | 3 |
| Number of shoes (links per side) | Single assembly (rubber) |

### Swing Mechanism

| | |
|---|---|
| Swing speed | 9.3 rpm |
| Swing torque | 4025.0 lbf·ft. (557.0 kgf·m) |

### Drive System

| | |
|---|---|
| Travel speed (low – high) | 1.5 – 2.6 mph (2.4 – 4.2 km/h) |
| Traction force, max. (drawbar pull) | 6900.0 lbf. (3130.0 kgf) |
| Max. grade | 58% (30°) |

### Environment

| | |
|---|---|
| Sound level (ISO 6395) | 94 dB(A) |
| Cabin sound level (ISO 6396) | 76 dB(A) |

### Refill Capacities

| | |
|---|---|
| Fuel tank | 9.5 gal. (36.0 L) |
| Cooling system (radiator capacity) | 1.3 gal. (4.8 L) |
| Engine oil | 1.5 gal. (5.8 L) |
| Final drive (each side) | 0.2 gal. (0.9 L) |
| Hydraulic system | 18.0 gal. (68.0 L) |
| Hydraulic tank | 10.0 gal. (38.0 L) |

All capacities are approximate values. Always refer to the machine's OM for exact refill levels. Check the dipstick, level eye, level plug, etc., to achieve the correct level.

### Hydraulic Cylinders

| | |
|---|---|
| Boom (1) bore x rod diameter x stroke | 2.8" x 1.6" x 22.6" (70 mm x 40 mm x 575 mm) |
| Arm[1,2] (1) bore x rod diameter x stroke | 2.8" x 1.6" x 19.9" (70 mm x 40 mm x 506 mm) |
| Bucket[1] (1) bore x rod diameter x stroke | 2.6" x 1.4" x 17.1" (65 mm x 35 mm x 435 mm) |
| Swing – boom[1] (1) bore x rod diameter x stroke | 3.1" x 1.8" x 25.3" (80 mm x 45 mm x 643 mm) |
| Blade[1] (2) bore x rod diameter x stroke | 3.3" x 1.6" x 5.1" (85 mm x 40 mm x 129 mm) |

[1] Cushion on rod end
[2] Cushion on base end

The piston rods and cylinder bodies are made of high-strength steel. A shock-absorbing mechanism is fitted in all cylinders to ensure shock-free operation and extended piston life.

NOTE: Where applicable, dimensions are in accordance with Society of Automotive Engineers (SAE) and ISO standards. Specifications and design are subject to change without notice. All dimensions are given for DEVELON mini excavators equipped with standard rubber tracks. Pictures of DEVELON mini excavators may show other than standard equipment. All dimensions are shown in inches. Respective metric dimensions are enclosed by parentheses. Rounding may impact specifications. DEVELON equipment is manufactured with a Quality Management System that is in compliance with ISO 9001:2008.

# Dimensions

| | | Standard Arm & HVAC Cabin (US20/US40) | Long Arm & HVAC Cabin (US21/US41) | Standard Arm & Canopy (US30/US50) | Long Arm & Canopy (US31/US51) |
|---|---|---|---|---|---|
| Boom type | | One-piece boom | | | |
| Arm type | | Standard arm | Long arm | Standard arm | Long arm |
| Bucket type (SAE) | | General-purpose | | | |
| Track type | | Fixed (rubber) | | | |
| Shipping length | A | 13' 8.8" (4186 mm) | 13' 9.0" (4191 mm) | 13' 8.8" (4186 mm) | 13' 9.0" (4191 mm) |
| Overall height | B | 8' 0.0" (2442 mm) | | | |
| Shipping width | C | 5' 1.0" (1550 mm) | | | |
| Tail swing radius | D | 2' 7.1" (790 mm) | 2' 9.7" (855 mm) | 2' 7.1" (790 mm) | 2' 9.7" (855 mm) |
| Tail swing overhang (rear)* | | – | | | |
| Tail swing overhang (side) | E | 0.6" (15 mm) | 3.1" (80 mm) | 0.6" (15 mm) | 3.1" (80 mm) |
| Counterweight clearance | F | 1' 8.2" (512 mm) | | | |
| Upper structure width | H | 4' 11.0" (1500 mm) | | | |
| Cabin height above house | I | 3' 2.2" (971 mm) | | | |
| Tumbler distance | J | 5' 0.6" (1540 mm) | | | |
| Overall track length | K | 6' 5.2" (1960 mm) | | | |
| Undercarriage width | L | 5' 1.0" (1550 mm) | | | |
| Track gauge width | M | 4' 1.2" (1250 mm) | | | |
| Track width | N | 11.8" (300 mm) | | | |
| Track height | O | 1' 5.8" (451 mm) | | | |
| Car body clearance | P | 8.5" (217 mm) | | | |
| Blade height | Q | 10.2" (259 mm) | | | |
| Blade clearance | R | 1' 3.1" (383 mm) | | | |
| Max. blade cut, below ground | S | 1' 1.2" (335 mm) | | | |

*Not shown on diagram
Less than zero indicated as "–"

US40/US41/US50/US51 packages include rotating piping as standard.

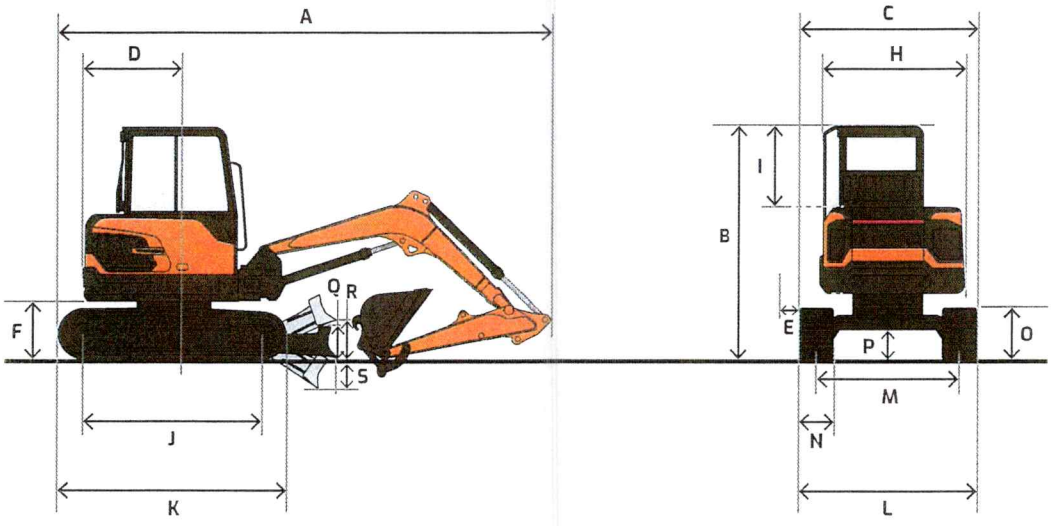

# Working Range

| | | Standard Arm & HVAC Cabin (US20/US40) | Long Arm & HVAC Cabin (US21/US41) | Standard Arm & Canopy (US30/US50) | Long Arm & Canopy (US31/US51) |
|---|---|---|---|---|---|
| Boom length | | 6' 10.3" (2090 mm) | | | |
| Arm length | | 3' 7.3" (1100 mm) | 4' 3.2" (1300 mm) | 3' 7.3" (1100 mm) | 4' 3.2" (1300 mm) |
| Bucket capacity (SAE) | | 2.8 ft.³ (0.08 m³) | | | |
| Max. digging reach | A | 15' 3.3" (4655 mm) | 15' 10.8" (4845 mm) | 15' 3.3" (4655 mm) | 15' 10.8" (4845 mm) |
| Max. digging reach (ground) | B | 14' 10.0" (4520 mm) | 15' 5.8" (4720 mm) | 14' 10.0" (4520 mm) | 15' 5.8" (4720 mm) |
| Max. digging depth | C | 8' 8.1" (2645 mm) | 9' 4.0" (2845 mm) | 8' 8.1" (2645 mm) | 9' 4.0" (2845 mm) |
| Max. dumping height | D | 9' 7.6" (2935 mm) | 10' 0.7" (3065 mm) | 9' 7.6" (2935 mm) | 10' 0.7" (3065 mm) |
| Max. digging height | E | 14' 4.6" (4385 mm) | 14' 9.8" (4515 mm) | 14' 4.6" (4385 mm) | 14' 9.8" (4515 mm) |
| Max. bucket pin height | F | 12' 0.3" (3665 mm) | 12' 5.4" (3795 mm) | 12' 0.3" (3665 mm) | 12' 5.4" (3795 mm) |
| Max. vertical wall depth | G | 5' 1.6" (1565 mm) | 5' 6.5" (1690 mm) | 5' 1.6" (1565 mm) | 5' 6.5" (1690 mm) |
| Max. vertical digging radius | H | 12' 0.5" (3670 mm) | 12' 6.2" (3815 mm) | 12' 0.5" (3670 mm) | 12' 6.2" (3815 mm) |
| Min. swing radius | I | 6' 10.5" (2095 mm) | 6' 8.5" (2045 mm) | 6' 10.5" (2095 mm) | 6' 8.5" (2045 mm) |
| Boom swing – left/right | | 66.5° / 53.5° | | | |
| Digging force, bucket | | 4894.0 lbf. (2220.0 kgf) | | | |
| Digging force, arm | | 3197.0 lbf. (1450.0 kgf) | 2866.0 lbf. (1300.0 kgf) | 3197.0 lbf. (1450.0 kgf) | 2866.0 lbf. (1300.0 kgf) |
| Counterweight | | 322 lb. (146 kg) | 542 lb. (156 kg) | 322 lb. (146 kg) | 542 lb. (156 kg) |
| Operating weight | | 6106.8 lb. (2770 kg) | 6344.4 lb. (2878 kg) | 5724.6 lb. (2642 kg) | 6062.7 lb. (2750 kg) |
| Ground pressure | | 3.8 psi (0.27 kgf/cm²) | | | |

US40/US41/US50/US51 packages include rotating piping as standard.

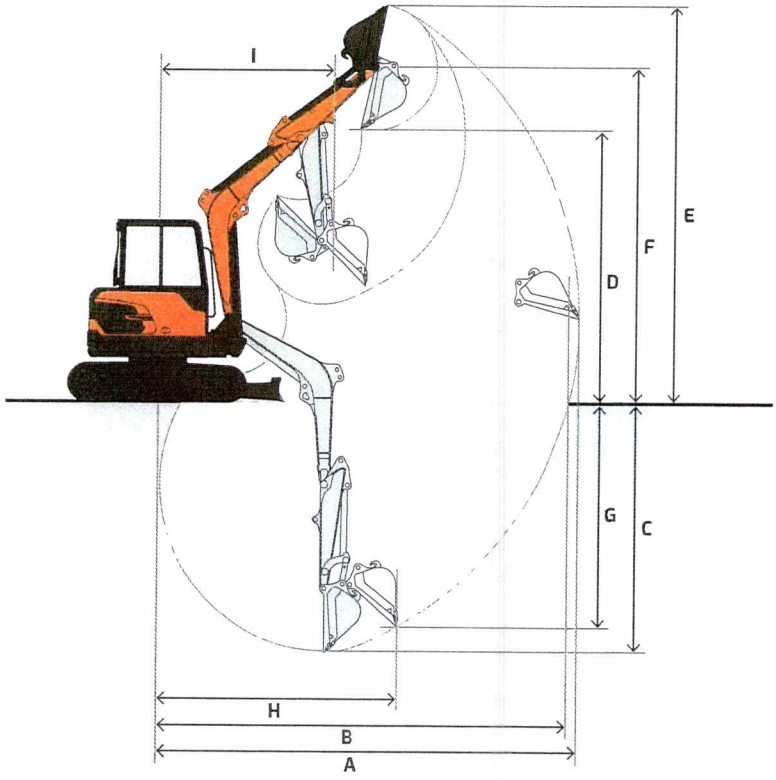

# Bucket

| | Standard Arm & HVAC Cabin (US20/US40) | Long Arm & HVAC Cabin (US21/US41) | Standard Arm & Canopy (US30/US50) | Long Arm & Canopy (US31/US51) |
|---|---|---|---|---|
| Boom | 6' 10.3" (2090 mm) | | | |
| Arm | 3' 7.3" (1100 mm) | 4' 3.2" (1300 mm) | 3' 7.3" (1100 mm) | 4' 3.2" (1300 mm) |
| Shoe size | 11.8" (300 mm) | | | |
| Track type | Fixed (rubber) | | | |
| Counterweight | 322 lb. (146 kg) | 542 lb. (156 kg) | 322 lb. (146 kg) | 542 lb. (156 kg) |

| Bucket Type | Model | Capacity* yd³ (m³) | Width in. (mm) | Weight lb. (kg) | Height in. (mm) | Length in. (mm) | Number of teeth | Connection/ Type |
|---|---|---|---|---|---|---|---|---|
| Quick-Hitch Ditching (QH03GB) | DC03GB-30QH | 0.18 (0.14) | 30 (762.0) | 214 (97.0) | 17.625 (447.6) | 23.625 (600.0) | – | Quick-hitch |
| | DC03GB-36QH | 0.22 (0.17) | 36 (914.4) | 250 (113.4) | | | | |
| | DC03GB-42QH | 0.26 (0.19) | 42 (1066.8) | 287 (130.2) | | | | |
| Quick-Hitch Heavy-Duty (QH03GB) | HD03GB-12QH | 0.06 (0.04) | 12 (304.8) | 123 (55.8) | 18.375 (466.7) | 30.875 (784.2) | 3 | Quick-hitch |
| | HD03GB-16QH | 0.09 (0.07) | 16 (406.4) | 154 (69.8) | | | 4 | |
| | HD03GB-18QH | 0.10 (0.07) | 18 (457.2) | 165 (74.8) | | | 4 | |
| | HD03GB-24QH | 0.14 (0.10) | 24 (609.6) | 198 (89.8) | | | 5 | |
| Pin-On Ditching | DC02GB-30 | 0.18 (0.14) | 31 (787.4) | 235 (106.0) | 22.75 (577.9) | 26.75 (679.5) | – | Pin-on |
| | DC02GB-36 | 0.23 (0.17) | 37 (939.8) | 270 (122.0) | | | | |
| | DC02GB-42 | 0.26 (0.20) | 43 (1092.2) | 300 (136.0) | | | | |
| | DC02GB-48 | 0.31 (0.24) | 49 (1244.6) | 330 (149.6) | | | | |
| Pin-On Heavy-Duty | HD02GB-12 | 0.06 (0.04) | 13 (330.2) | 125 (57.0) | 22.375 (568.3) | 32.0 (812.8) | 3 | Pin-on |
| | HD02GB-16 | 0.09 (0.07) | 17 (431.8) | 145 (66.0) | | | 4 | |
| | HD02GB-18 | 0.10 (0.07) | 19 (482.6) | 155 (70.0) | | | 4 | |
| | HD02GB-20 | 0.11 (0.08) | 21 (533.4) | 165 (75.0) | | | 4 | |
| | HD02GB-24 | 0.14 (0.10) | 25 (635.0) | 185 (84.0) | | | 5 | |

*Capacity based on ISO 7451 and heaped with a 1:1 angle of repose
- Equipped with bolt-on wear shrouds
- Equipped with bolt-on teeth
- Equipped with bolt-on cutting edge
- These recommendations are given as a guide only and based on typical operating conditions.

Please consult with your DEVELON dealer to properly match buckets and attachments for the application.

US40/US41/US50/US51 packages include rotating piping as standard.

# Lifting Capacity

Rating over front  Rating over side or 360°

### DX27Z-7 US20/US40 | Cabin & Standard Arm

**Boom: 6' 10.3" (2090 mm) | Arm: 3' 7.3" (1100 mm) | Counterweight: 322 lb. (146 kg) | Dozer Down | Bucket: None | Unit lb. (kg)**

| B (ft. or m) \ A (ft. or m) | 5' (1.0 m) | | 10' (2.0 m) | | 15' (3.0 m) | | Max. Reach | | A |
|---|---|---|---|---|---|---|---|---|---|
| 15' (3.0 m) | | | | | * 1260<br>* 570 | * 1260<br>* 570 | * 1320<br>* 600 | 1210<br>550 | 10.49'<br>(3.20 m) |
| 10' (2.0 m) | | | | | * 1380<br>630 | 1330<br>600 | * 1320<br>* 600 | 920<br>420 | 12.33'<br>(3.76 m) |
| 5' (1.0 m) | | | | | * 1780<br>* 810 | 1260<br>570 | * 1370<br>* 620 | 840<br>380 | 12.87'<br>(3.92 m) |
| Ground Level | | | * 3510 | 2270 | * 2010<br>* 910 | 1210<br>550 | * 1440<br>* 650 | 880<br>400 | 12.32'<br>(3.76 m) |
| -5' (-1.0 m) | * 4010<br>* 1820 | * 4010<br>* 1820 | * 3110<br>* 1410 | 2300<br>1040 | * 1730<br>* 790 | 1220<br>550 | * 1500<br>* 680 | 1120<br>510 | 10.48'<br>(3.19 m) |

### DX27Z-7 US20/US40 | Cabin & Standard Arm

**Boom: 6' 10.3" (2090 mm) | Arm: 3' 7.3" (1100 mm) | Counterweight: 322 lb. (146 kg) | Dozer Up | Bucket: None | Unit lb. (kg)**

| B (ft. or m) \ A (ft. or m) | 5' (1.0 m) | | 10' (2.0 m) | | 15' (3.0 m) | | Max. Reach | | A |
|---|---|---|---|---|---|---|---|---|---|
| 15' (3.0 m) | | | | | * 1260<br>* 570 | 1070<br>480 | 1170<br>530 | 950<br>430 | 10.49'<br>(3.20 m) |
| 10' (2.0 m) | | | | | 1290<br>580 | 1040<br>470 | 890<br>400 | 710<br>320 | 12.33'<br>(3.76 m) |
| 5' (1.0 m) | | | | | 1220<br>550 | 970<br>440 | 810<br>370 | 650<br>290 | 12.87'<br>(3.92 m) |
| Ground Level | | | 2210<br>1000 | 1680<br>760 | 1170<br>530 | 930<br>420 | 850<br>380 | 680<br>310 | 12.32'<br>(3.76 m) |
| -5' (-1.0 m) | * 4010<br>* 1820 | * 4010<br>* 1820 | 2240<br>1010 | 1710<br>770 | 1180<br>530 | 930<br>420 | 1080<br>490 | 860<br>390 | 10.48'<br>(3.19 m) |

A Distance from center of rotation
B Height

NOTE: Lifting capacities are in compliance with SAE 1097 and ISO 10567. Machine in lifting mode with power boost turned on. Load point is the end of the arm. Rated loads shown do not exceed 75% of minimum tipping loads or 87% of hydraulic capacities. Rated loads marked with an asterisk (*) are limited by hydraulic capacities. The least stable position is over the side. The total mass of machine includes the mass of the boom, arm, counterweight, all operating fluids and 165 lb. (75 kg) operator.

US40/US41/US50/US51 packages include rotating piping as standard.

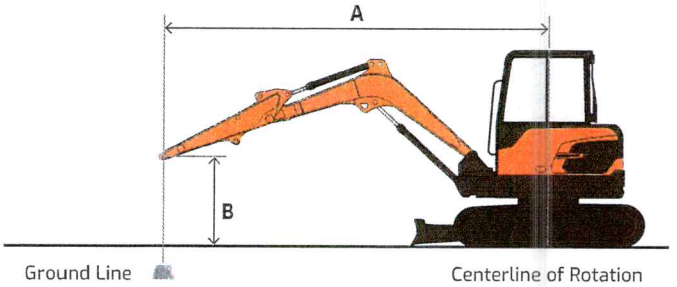

# Lifting Capacity

Rating over front  Rating over side or 360°

**DX27Z-7 US21/US41 | Cabin & Long Arm**
**Boom: 6' 10.3" (2090 mm) | Arm: 4' 3.2" (1300 mm) | Counterweight: 542 lb. (156 kg) | Dozer Down | Bucket: None | Unit lb. (kg)**

| A (ft. or m) / B (ft. or m) | 5' (1.0 m) | | 10' (2.0 m) | | 15' (3.0 m) | | 20' (4.0 m) | | Max. Reach | | |
|---|---|---|---|---|---|---|---|---|---|---|---|
| | | | | | | | | | | | A |
| 15' (3.0 m) | | | | | * 1090<br>* 500 | * 1090<br>* 500 | | | * 1220<br>* 550 | 1190<br>540 | 11.30'<br>(3.45 m) |
| 10' (2.0 m) | | | | | * 1260<br>* 570 | * 1260<br>* 570 | | | * 1230<br>* 560 | 940<br>430 | 12.99'<br>(3.96 m) |
| 5' (1.0 m) | | | | | * 1700<br>* 770 | 1390<br>630 | * 1310<br>* 590 | 910<br>410 | * 1280<br>* 580 | 870<br>390 | 13.50'<br>(4.11 m) |
| Ground Level | | | * 3510<br>* 1590 | 2500<br>1130 | * 2000<br>* 910 | 1340<br>610 | | | * 1360<br>* 620 | 900<br>410 | 12.98'<br>(3.96 m) |
| -5' (-1.0 m) | * 3410<br>* 1550 | * 3410<br>* 1550 | * 3340<br>* 1520 | 2510<br>1140 | * 1860<br>* 840 | 1330<br>600 | | | * 1430<br>* 650 | 1110<br>500 | 11.27'<br>(3.43 m) |
| -10' (-2.0 m) | | | * 1570<br>* 710 | * 1570<br>* 710 | | | | | * 1290<br>* 580 | 1290<br>* 580 | 7.15'<br>(2.18 m) |

**DX27Z-7 US21/US41 | Cabin & Long Arm**
**Boom: 6' 10.3" (2090 mm) | Arm: 4' 3.2" (1300 mm) | Counterweight: 542 lb. (156 kg) | Dozer Up | Bucket: None | Unit lb. (kg)**

| A (ft. or m) / B (ft. or m) | 5' (1.0 m) | | 10' (2.0 m) | | 15' (3.0 m) | | 20' (4.0 m) | | Max. Reach | | |
|---|---|---|---|---|---|---|---|---|---|---|---|
| | | | | | | | | | | | A |
| 15' (3.0 m) | | | | | * 1090<br>* 500 | * 1090<br>* 500 | | | 1150<br>520 | 940<br>430 | 11.30'<br>(3.45 m) |
| 10' (2.0 m) | | | | | * 1260<br>* 570 | 1160<br>530 | | | 910<br>410 | 740<br>340 | 12.99'<br>(3.96 m) |
| 5' (1.0 m) | | | | | 1350<br>610 | 1090<br>500 | 880<br>400 | 710<br>320 | 840<br>380 | 680<br>310 | 13.50'<br>(4.11 m) |
| Ground Level | | | 2440<br>1110 | 1870<br>850 | 1300<br>590 | 1040<br>470 | | | 870<br>400 | 710<br>320 | 12.98'<br>(3.96 m) |
| -5' (-1.0 m) | * 3410<br>* 1550 | * 3410<br>* 1550 | 2450<br>1110 | 1880<br>850 | 1290<br>590 | 1030<br>470 | | | 1070<br>490 | 860<br>390 | 11.27'<br>(3.43 m) |
| -10' (-2.0 m) | | | * 1570<br>* 710 | * 1570<br>* 170 | | | | | * 1290<br>* 580 | * 1290<br>* 580 | 7.15'<br>(2.18 m) |

A Distance from center of rotation
B Height

NOTE: Lifting capacities are in compliance with SAE 1097 and ISO 10567. Machine in lifting mode with power boost turned on. Load point is the end of the arm. Rated loads shown do not exceed 75% of minimum tipping loads or 87% of hydraulic capacities. Rated loads marked with an asterisk (*) are limited by hydraulic capacities. The least stable position is over the side. The total mass of machine includes the mass of the boom, arm, counterweight, all operating fluids and 165 lb. (75 kg) operator.

US40/US41/US50/US51 packages include rotating piping as standard.

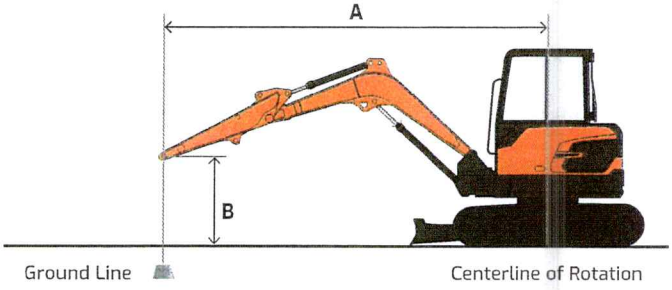

# Lifting Capacity

Rating over front  Rating over side or 360°

**DX27Z-7 US30/US50 | Canopy & Standard Arm**
**Boom: 6' 10.3" (2090 mm) | Arm: 3' 7.3" (1100 mm) | Counterweight: 322 lb. (146 kg) | Dozer Down | Bucket: None | Unit lb. (kg)**

| A (ft. or m) / B (ft. or m) | 5' (1.0 m) | | 10' (2.0 m) | | 15' (3.0 m) | | Max. Reach | | A |
|---|---|---|---|---|---|---|---|---|---|
| 15' (3.0 m) | | | | | * 1260<br>* 570 | * 1260<br>* 570 | * 1320<br>* 600 | 1160<br>520 | 10.49'<br>(3.20 m) |
| 10' (2.0 m) | | | | | * 1380<br>* 630 | 1270<br>570 | * 1320<br>* 600 | 870<br>400 | 12.33'<br>(3.76 m) |
| 5' (1.0 m) | | | | | * 1780<br>* 810 | 1200<br>540 | * 1370<br>* 620 | 790<br>360 | 12.87'<br>(3.92 m) |
| Ground Level | | | * 3510<br>* 1590 | 2160<br>980 | * 2010<br>* 910 | 1150<br>520 | * 1440<br>* 650 | 830<br>380 | 12.32'<br>(3.76 m) |
| -5' (-1.0 m) | * 4010<br>* 1820 | * 4010<br>* 1820 | * 3110<br>* 1410 | 2180<br>990 | * 1730<br>* 790 | 1160<br>520 | * 1500<br>* 680 | 1060<br>480 | 10.48'<br>(3.19 m) |

**DX27Z-7 US30/US50 | Canopy & Standard Arm**
**Boom: 6' 10.3" (2090 mm) | Arm: 3' 7.3" (1100 mm) | Counterweight: 322 lb. (146 kg) | Dozer Up | Bucket: None | Unit lb. (kg)**

| A (ft. or m) / B (ft. or m) | 5' (1.0 m) | | 10' (2.0 m) | | 15' (3.0 m) | | Max. Reach | | A |
|---|---|---|---|---|---|---|---|---|---|
| 15' (3.0 m) | | | | | 1250<br>570 | 1010<br>460 | 1120<br>510 | 900<br>410 | 10.49'<br>(3.20 m) |
| 10' (2.0 m) | | | | | 1220<br>560 | 990<br>450 | 840<br>380 | 670<br>310 | 12.33'<br>(3.76 m) |
| 5' (1.0 m) | | | | | 1150<br>520 | 920<br>420 | 760<br>350 | 610<br>280 | 12.87'<br>(3.92 m) |
| Ground Level | | | 2090<br>950 | 1590<br>720 | 1110<br>500 | 870<br>400 | 800<br>360 | 640<br>290 | 12.32'<br>(3.76 m) |
| -5' (-1.0 m) | * 4010<br>* 1820 | * 4010<br>* 1820 | 2120<br>960 | 1620<br>730 | 1110<br>500 | 880<br>400 | 1020<br>460 | 810<br>370 | 10.48'<br>(3.19 m) |

A Distance from center of rotation
B Height

NOTE: Lifting capacities are in compliance with SAE 1097 and ISO 10567. Machine in lifting mode with power boost turned on. Load point is the end of the arm. Rated loads shown do not exceed 75% of minimum tipping loads or 87% of hydraulic capacities. Rated loads marked with an asterisk (*) are limited by hydraulic capacities. The least stable position is over the side. The total mass of machine includes the mass of the boom, arm, counterweight, all operating fluids and 165 lb. (75 kg) operator.

US40/US41/US50/US51 packages include rotating piping as standard.

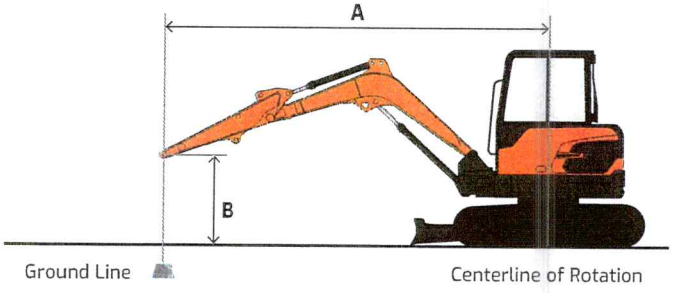

# Lifting Capacity

Rating over front  Rating over side or 360°

**DX27Z-7 US31/US51 | Canopy & Long Arm**
**Boom: 6' 10.3" (2090 mm) | Arm: 4' 3.2" (1300 mm) | Counterweight: 542 lb. (156 kg) | Dozer Down | Bucket: None | Unit lb. (kg)**

| B (ft. or m) \ A (ft. or m) | 5' (1.0 m) | | 10' (2.0 m) | | 15' (3.0 m) | | 20' (4.0 m) | | Max. Reach | | |
|---|---|---|---|---|---|---|---|---|---|---|---|
| | | | | | | | | | | | A |
| 15' (3.0 m) | | | | | * 1090<br>* 500 | * 1090<br>* 500 | | | * 1220<br>* 550 | 1130<br>510 | 11.30' (3.45 m) |
| 10' (2.0 m) | | | | | * 1260<br>* 570 | * 1260<br>* 570 | | | * 1230<br>* 560 | 890<br>400 | 12.99' (3.96 m) |
| 5' (1.0 m) | | | | | * 1700<br>* 770 | 1330<br>600 | * 1310<br>* 590 | 860<br>390 | * 1280<br>* 580 | 820<br>370 | 13.50' (4.11 m) |
| Ground Level | | | * 3510<br>* 1590 | 2370<br>1080 | * 2000<br>* 910 | 1270<br>580 | | | * 1360<br>* 620 | 860<br>390 | 12.98' (3.96 m) |
| -5' (-1.0 m) | * 3410<br>* 1550 | * 3410<br>* 1550 | * 3340<br>* 1520 | 2380<br>1080 | * 1860<br>* 840 | 1260<br>570 | | | * 1430<br>* 650 | 1050<br>480 | 11.27' (3.43 m) |
| -10' (-2.0 m) | | | * 1570<br>* 710 | * 1570<br>* 710 | | | | | * 1290<br>* 580 | 1290<br>* 580 | 7.15' (2.18 m) |

**DX27Z-7 US31/US51 | Canopy & Long Arm**
**Boom: 6' 10.3" (2090 mm) | Arm: 4' 3.2" (1300 mm) | Counterweight: 542 lb. (156 kg) | Dozer Up | Bucket: None | Unit lb. (kg)**

| B (ft. or m) \ A (ft. or m) | 5' (1.0 m) | | 10' (2.0 m) | | 15' (3.0 m) | | 20' (4.0 m) | | Max. Reach | | |
|---|---|---|---|---|---|---|---|---|---|---|---|
| | | | | | | | | | | | A |
| 15' (3.0 m) | | | | | * 1090<br>* 500 | * 1090<br>* 500 | | | 1090<br>500 | 890<br>410 | 11.30' (3.45 m) |
| 10' (2.0 m) | | | | | * 1260<br>* 570 | 1110<br>500 | | | 860<br>390 | 700<br>320 | 12.99' (3.96 m) |
| 5' (1.0 m) | | | | | 1280<br>580 | 1040<br>470 | 830<br>380 | 670<br>300 | 790<br>360 | 640<br>290 | 13.50' (4.11 m) |
| Ground Level | | | 2310<br>1050 | 1780<br>810 | 1230<br>560 | 980<br>450 | | | 830<br>370 | 670<br>300 | 12.98' (3.96 m) |
| -5' (-1.0 m) | * 3410<br>* 1550 | * 3410<br>* 1550 | 2320<br>1050 | 1790<br>810 | 1220<br>550 | 980<br>440 | | | 1010<br>460 | 820<br>370 | 11.27' (3.43 m) |
| -10' (-2.0 m) | | | * 1570<br>* 710 | * 1570<br>* 710 | | | | | * 1290<br>* 580 | * 1290<br>* 580 | 7.15' (2.18 m) |

A Distance from center of rotation
B Height

NOTE: Lifting capacities are in compliance with SAE 1097 and ISO 10567. Machine in lifting mode with power boost turned on. Load point is the end of the arm. Rated loads shown do not exceed 75% of minimum tipping loads or 87% of hydraulic capacities. Rated loads marked with an asterisk (*) are limited by hydraulic capacities. The least stable position is over the side. The total mass of machine includes the mass of the boom, arm, counterweight, all operating fluids and 165 lb. (75 kg) operator.

US40/US41/US50/US51 packages include rotating piping as standard.

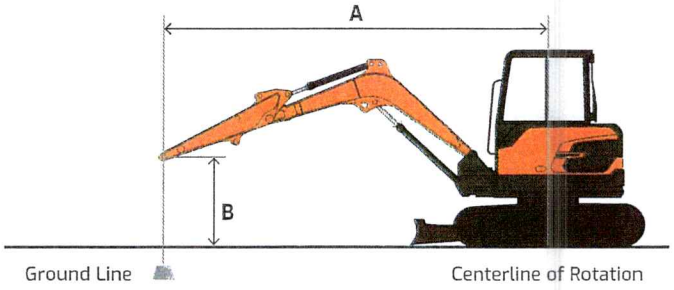

# Standard & Optional Equipment | Standard Base Package, US20

■ Standard • Optional

## Engine

| | |
|---|---|
| Emissions (EPA), T4f | ■ |
| Direct fuel injected | ■ |
| Fuel filter with water separator | ■ |
| Coolant recovery tank | ■ |
| Dual element dry-type air filter | ■ |
| Electronic engine control (ECU) | ■ |
| Auto preheat cold start assist | ■ |
| Auto idle | ■ |
| Overheat & low oil pressure engine protection | ■ |

## Hydraulic

| | |
|---|---|
| Variable axial piston main pump | ■ |
| Pilot-operated control valves | ■ |
| Pilot gear pump (tandem) | ■ |
| Axial piston swing motor | ■ |
| Spring-applied hydraulic release brake | ■ |
| Axial piston travel motor (high/low, auto) | ■ |
| Auxiliary hydraulics, two-way | ■ |
| Adjustable auxiliary flow | ■ |

## Electrical

| | |
|---|---|
| Alternator – 13.5 V, 75 A | ■ |
| 12 V battery, 400 CCA @ 0° F (-18° C) | ■ |
| Lights: cabin (1), boom (1) | ■ |
| Additional lighting | • |
| Rotating beacon | • |
| Hour meter | ■ |
| Engine restart prevention system | ■ |
| Laptop service port | ■ |
| Self-diagnostics system | ■ |

## Cabin

| | |
|---|---|
| Steel, all-weather & sound suppressed | ■ |
| ROPS/TOPS | ■ |
| Front window with wiper/washer | ■ |
| Tinted safety glass | ■ |
| Pull-up type front window | ■ |
| Lockable doors | ■ |
| Seat<br>- 2" (51 mm) seat belt<br>- Adjustable height & recline | ■ |
| Adjustable armrests | ■ |
| Air conditioner with heater | ■ |
| Mirrors | ■ |
| AM/FM stereo & Bluetooth® | ■ |
| Speakers (2) | ■ |
| Power socket, 12 V | ■ |
| Interior light | ■ |
| Storage for operator's manuals | ■ |

## Controls

| | |
|---|---|
| Joystick controls<br>- Two hydraulic joysticks control boom, arm, bucket & slew functions<br>- Thumbwheels control auxiliary hydraulics (if equipped) | ■ |
| Blade control lever | ■ |
| Pattern control change valve (SAE, ISO) | ■ |
| Engine speed control dial | ■ |
| Travel pedals with hand levers | ■ |
| Switches, console-mounted<br>- Starter switch (key)<br>- Heater/AC control panel<br>- Rotating beacon (if equipped)<br>- 12 V power socket & USB charger<br>- Keypad buttons<br>- Overload warning<br>- Travel/swing alarm<br>- Light<br>- Work lights<br>- Wiper & washer<br>- Auto idle | ■ |
| Emergency stop switch | ■ |

## Display Monitor & Warnings

| | |
|---|---|
| Buzzer<br>- Engine oil pressure<br>- Coolant temperature | ■ |
| Touch screen display monitor<br>- Digital clock<br>- Menu select button<br>- Back button<br>- Fuel gauge<br>- Engine coolant temperature<br>- Hydraulic oil temperature<br>- Mode<br>- Tachometer<br>- Operating mode/flow setting selector | ■ |
| Indicator lights<br>- Air filter restriction indicator<br>- Engine check warning light<br>- Hydraulic oil warning<br>- Fuel warning<br>- Auto idle indicator<br>- Auxiliary flow mode indicator<br>- Engine oil pressure light with audible alarm<br>- Preheat (cold start assist) indicator<br>- Two-speed travel indicator light | ■ |
| Travel alarm | • |

## Undercarriage

| | |
|---|---|
| Track rollers, upper | 1 |
| Track rollers, lower | 3 |
| Rubber tracks – 300 mm | ■ |

## Other

| | |
|---|---|
| Centralized lubrication<br>- Swing pinion<br>- Swing bearing | ■ |
| Dozer blade | ■ |
| Manuals<br>- Operation<br>- AEM Safety Manual | ■ |
| Vandalism protection<br>- Lockable panels<br>- Lockable fluid fill points | ■ |
| MY DEVELON (telematics) | ■ |

# ATTACHMENTS

**THE FOLLOWING DOCUMENTS MUST BE COMPLETED AND INCLUDED IN THE RESPONSE PACKAGE:**

| | | |
|---|---|---|
| 1. | ATTACHMENT A | SIGNED SOLICITATION RESPONSE COVER SHEET/ACKNOWLEDGEMENT OF ADDENDA/SUBMISSION CHECKLIST |
| 2. | ATTACHMENT B | PRICING SHEET |
| 3. | ATTACHMENT C | SYSTEM FOR AWARD MANAGEMENT (SAM.GOV) RECORD SEARCH |
| 4. | ATTACHMENT D | CUSTOMER/CLIENT REFERENCES |
| 5. | ATTACHMENT E | CERTIFICATE OF INSURANCE (IF APPLICABLE) |
| 6. | ATTACHMENT F | ETHICS AND CONFLICT OF INTEREST ACKNOWLEDGEMENT |
| 7. | ATTACHMENT G | STATEMENT OF CONFLICT OF INTEREST (IF ANY) |
| 8. | ATTACHMENT H | CONFLICT OF INTEREST QUESTIONNAIRE (FORM CIQ) |
| 9. | ATTACHMENT I | DISCLOSURE OF LOBBYING ACTIVITIES SF-LLL CERTIFICATION |
| 10. | ATTACHMENT J | TEXAS ETHICS COMMISSION CERTIFICATE OF INTERESTED PARTIES (FORM 1295) |
| 11. | ATTACHMENT K | BIDDER'S CERTIFICATION |
| 12. | ATTACHMENT L | NON-COLLUSION AFFIDAVIT |

## ATTACHMENT A:

### SOLICITATION RESPONSE COVER SHEET/ACKNOWLEDGMENT OF ADDENDA/SUBMISSION CHECKLIST

| | |
|---|---|
| **Title of Solicitation:** | (2) 2024 MINI-EXCAVATORS |
| **Name of Respondent:** | ROB VIA |
| **Company:** | R. B. EVERETT & COMPANY |
| **Mailing Address:** | P. O. BOX 7300 |
| **City, State, Zip:** | PASADENA, TEXAS 77508 |
| **Phone Number:** | 281-991-8161 |
| **Company Contact Email Address:** | rvia@rbeverett.com |
| **Texas Vendor ID Number:** | |
| **EIN/Federal Tax Identification Number:** | 74-0615140 |

**ACKNOWLEDGEMENT OF ADDENDA**

| ADDENDUM NO. 1 | DATE ISSUED |
|---|---|
| No Bid Bond Required | 10/22/24 |
| | |
| | |
| | |

☐ Please check this box if no addenda were issued.

# Addendum 1
# 10/22/24
# LM 24-17 Mini Excavator

Is a Bid bond required?

**No, a bid bond is not required**

I missed the pre-bid conference. Does this disqualify me from submitting a proposal?

**No. The City has waived the mandatory pre-bid attendance requirement.**

Could the City please clarify if they will allow electronic submission via their bid submission portal, or if only mailed/hand delivered responses will be accepted?

**You may submit your response either by mail or through an electronic upload; both methods are not required.**

For digital delivery: the subject line of the email should include the Respondent's Name, RFP number, and the time/due date of the RFP. The completed response, along with all attachments, should be uploaded to the following point of contact: **Bidsubmit.cityoflamarque.org**

If the response is mailed or hand-delivered, sealed proposals (an original and 3 copies) must be submitted on the original forms provided. Each response must be sealed and placed in a properly identified envelope, including the Respondent's Name, RFP number, and the time/due date of the RFP.

**Mailed/hand-delivered submissions should be addressed to:**
**City Clerk**
**1111 Bayou Road**
**La Marque, TX 77568**

## ATTACHMENT A (CONTINUED)

### SOLICITATION RESPONSE COVER SHEET/ACKNOWLEDGMENT OF ADDENDA/ SUBMISSION CHECKLIST

This checklist is provided for the Respondent's use in assuring compliance with required documentation; however, it does not include all specification requirements and does not relieve the Respondent of the need to read and comply with the specifications. Your submittal of the documents attests to the fact that you have read and/or included the documents with your response.

**SUBMISSION CHECKLIST**

| CHECK FOR COMPLETION | DOCUMENTS REQUIRED FOR SUBMISSION |
|---|---|
| ☒ | A. Solicitation Response Cover Sheet/Acknowledgement of Addenda/Submission Checklist |
| ☒ | B. Pricing Sheet |
| ☒ | C. System for Award Management (SAM.gov) Record Search |
| ☒ | D. Customer/Client References |
| ☒ | E. Certificate of Insurance (if applicable) |
| ☒ | F. Ethics and Conflict of Interest Acknowledgement |
| ☒ | G. Statement of Conflicts of Interest (if any) |
| ☒ | H. Conflict of Interest Questionnaire (Form CIQ) |
| ☒ | Please check this box if the Respondent does not identify a conflict of interest and therefore, will not be submitting the Conflict of Interest Questionnaire Form CIQ. |
| ☒ | I. Disclosure of Lobbying Activities SF-LLL Certification (Required for all proposals exceeding $100,000) |
| ☒ | Please check this box if the proposal does not exceed $100,000. |
| N/A | J. Texas Ethics Commission Certificate of Interested Parties (Form 1295) (This is a sample and is only required to be completed by the Respondent selected for award.) |
| ☒ | K. Bidder's Certification |
| ☒ | L. Non-Collusion Affidavit |
| ☐ | |
| ☐ | |

The Respondent's authorized agent must sign this document to acknowledge having read this solicitation carefully and completely, including the list of addenda, and that the information submitted is true and correct.

| | |
|---|---|
| **AUTHORIZED AGENT NAME:** | ROB VIA |
| **AUTHORIZED SIGNATURE:** |  |
| **TITLE OF AUTHORIZED AGENT:** | BUSINESS DEVELOPMENT MANAGER |
| **DATE OF SIGNATURE:** | 10/25/24 |

## ATTACHMENT B: PRICING SHEET

Respondent shall complete and submit the following pricing sheet with the proposal response package. The Entity reserves the right to make an award on the basis of best value in the interest of the Entity. ALL PRICING MUST BE FIRM FIXED PRICING.

| ITEM | DESCRIPTION | QUANTITY | UNIT OF MEASURE | UNIT PRICE | EXTENSION |
|---|---|---|---|---|---|
| 1 | Entity should enter the description and quantity of the services/products as contained in the Scope of Work in Exhibit A | | | $ | $ |
| 2 | New Develon DX27Z-7 Cab Option | 2 | | $42,646.00 | $85,292.00 |
| 3 | New Develon DX27Z-7 Canopy Option | 2 | | $36,515.00 | $73,030.00 |
| 4 | 5 Yr/5000 Hr Full Machine Warranty | 1/EACH | | $ 0 | $ 0 |
| 5 | | | | $ | $ |
| **TOTAL FIRM FIXED PRICE** | | | | | $ |
| 6 | **DELIVERY** – Number of calendar days for delivery after receipt of the order: | | | 90 calendar days | |

| | |
|---|---|
| Name of Firm: | R. B. EVERETT & COMPANY |
| RFP #: | |
| RFP Name: | ROB VIA, BUSINESS DEVELOPMENT MANAGER |

### AUTHORIZED AGENT – SIGNATURE AND CONTACT INFORMATION

The Respondent's authorized agent must sign this document to acknowledge they read this solicitation carefully and completely, and the information submitted is true and correct.

| | |
|---|---|
| **SIGNATURE OF AUTHORIZED AGENT:** |  |
| **PRINTED NAME OF AUTHORIZED AGENT:** | ROB VIA |
| **TITLE OF AUTHORIZED AGENT:** | BUSINESS DEVELOPMENT MANAGER |
| **DATE OF SIGNATURE:** | 10/25/24 |

## ATTACHMENT C: SYSTEM FOR AWARD MANAGEMENT (SAM.GOV) RECORD SEARCH

This project is funded by Coronavirus State and Local Fiscal Recovery Funds which requires all contractors and vendors to be in good standing according to SAM.gov and the Texas State Comptroller's office.

**Verification of SAM.gov Status**

1. Respondent must not be suspended or debarred at the time of the proposal submittal. The proposal response package must include a completed Non-Debarment Certification Form located **on the next page** herein.
2. All Respondents must be pre-vetted for eligibility to perform the outlined ARPA funded scope of work. A printed screenshot from the SAM.gov website verifies whether the Vendor is excluded from contract participation at the federal level.

**Contract Award**

The ARPA Award Recipient must verify the SAM.gov status of the Respondent(s) selected for contract award prior to execution of the contract as stated in the Non-Debarment Certification Form. The final verification of the Respondent's SAM.gov status is completed prior to contract award, and in addition to the initial verification documentation provided with the proposal response submittal.

| NON-DEBARMENT CERTIFICATION FORM | | | |
|---|---|---|---|
| **COMPANY/ENTITY LEGAL NAME:** R. B. EVERETT & COMPANY | | | |
| **STREET ADDRESS:** 8211 RED BLUFF RD | | | |
| **CITY:** PASADENA | **STATE:** TEXAS | **ZIP:** 77507 | |
| **CONTACT NAME:** ROB VIA | | | |
| **CONTACT EMAIL:** rvia@rbeverett.com | | **CONTACT PHONE:** 281-991-8161 | |
| ***UEI #** | WYKUKS3MAUK7 | ****TIN #** | |

*Subrecipients are required to have a Unique Entity Identifier (UEI) Number prior to an award. All entities must be pre-vetted for eligibility/ability to perform the outlined ARPA funded scope of work and a record (PDF of SAM.gov screenshot) of SAM debarment clearance must be obtained prior to entering into any final contracts. **Beneficiary Entities are required to have UEI and/or TIN.

**APPLICABLE REGULATIONS: As stated in the ARPA/SLFRF Terms & Conditions:** *"OMB Guidelines to Agencies on Governmentwide Debarment and Suspension (Nonprocurement), 2 CFR Part 180, including the requirement to include a term or condition in all lower tier covered transactions (contracts and subcontracts described in 2 CFR Part 180, subpart B) that the award is subject to 2 CFR Part 180 and Treasury's implementing regulation at 31 CFR Part 19."*

**Also, Federal Executive Order (E.O.) 12549:** "Debarment" requires that contractors, beneficiaries or subrecipient organizations and their principals – who are receiving awards, using federal funds, are not debarred, suspended, proposed for debarment, declared ineligible, or voluntarily excluded by any federal department or agency from doing business with the federal government. By signing this document, you certify that your organization and its principals are not debarred. Failure to comply or attempts to edit this language may disqualify you from receiving or retaining funds. Information on debarment is available at the following website: www.sam.gov

**Be advised that we may pursue available remedies per 2 CFR 180.360 as an ARPA recipient entity:** *"If a federal agency later determines that you failed to tell the [awarding agency] that you were excluded or disqualified at the time you entered into the covered transaction with that person/awarding agency, the agency may pursue any available remedies, including suspension and debarment."*

| [INITIAL] | CERTIFICATION & SIGNATURE |
|---|---|
| | **We hereby certify that we are not excluded, disqualified, or debarred from receiving federally funded awards.** |
| | **We hereby confirm that if that status should change within the course of this agreement, we will provide notification immediately. Failure to do so may result in this agreement's termination and/or the repayment of funds.** |

*Your signature certifies that the information provided on this form is correct and that neither you nor your principal(s) is/are presently debarred, suspended, proposed for debarment, declared ineligible, or voluntarily excluded from participation in this transaction by any federal department or agency.*

**SIGNATURE**

Rob Via, Business Development Manager — 10/25/24

**PRINTED NAME & TITLE** — **DATE**

**FOR DEPARTMENT USE ONLY**

| | | |
|---|---|---|
| SAM Debarment/Certification Record of Clearance | Yes [ ] No [ ] | Note: |
| State of Texas Debarred Vendor List Cleared | Yes [ ] No [ ] | Note: |
| Verified By: | Yes [ ] No [ ] | Date: |

## ATTACHMENT D: CUSTOMER/CLIENT REFERENCES

Respondents shall use Attachment D to describe a minimum of three (3) and maximum of five (5) references for jobs, and corresponding references, completed within last five (5) years.

**Respondent's Name:** ROB VIA

The references shall illustrate recent experience successfully completing work of a similar nature and scope as the work described in this RFP. This form may be modified as needed to comply with the requirement to document company information. ***Failure to return this attachment (or a reasonable facsimile) may result in the proposal being considered non-responsive. Failure to provide references may result in the proposal being considered non-responsive.***

**REFERENCE 1:**

| | |
|---|---|
| **Company Name:** | Furnished on receipt of order |
| **Company Address:** | |
| **Contact Name/Title/Phone:** | |
| **Contact Email:** | |
| **Contract Award Date:** | |
| **Contract Completion Date:** | |
| **Contract Project Name:** | |
| **Brief Description of Services:** | |

**REFERENCE 2:**

| | |
|---|---|
| Company Name: | |
| Company Address: | |
| Contact Name/Title/Phone: | |
| Contact Email: | |
| Contract Award Date: | |
| Contract Completion Date: | |
| Contract Project Name: | |
| Brief Description of Services: | |

**REFERENCE 3:**

| | |
|---|---|
| Company Name: | |
| Company Address: | |
| Contact Name/Title/Phone: | |
| Contact Email: | |
| Contract Award Date: | |
| Contract Completion Date: | |
| Contract Project Name: | |
| Brief Description of Services: | |

**REFERENCE 4:**

| | |
|---|---|
| Company Name: | |
| Company Address: | |
| Contact Name/Title/Phone: | |
| Contact Email: | |
| Contract Award Date: | |
| Contract Completion Date: | |
| Contract Project Name: | |
| Brief Description of Services: | |

**REFERENCE 5:**

| | |
|---|---|
| Company Name: | |
| Company Address: | |
| Contact Name/Title/Phone: | |
| Contact Email: | |
| Contract Award Date: | |
| Contract Completion Date: | |
| Contract Project Name: | |
| Brief Description of Services: | |

## ATTACHMENT E: CERTIFICATE OF INSURANCE
### (PROPOSAL RESPONDER SUPPLIES INSURANCE WITH THE PROPOSAL PACKAGE)

**INSURANCE REQUIREMENTS**

If requested, the Respondent shall supply an original, certified copy of an insurance certificate listing **the Entity** as additional insured. The successful Respondent will be required to maintain, at all times during performance of the contract, the insurance detailed below. Failure to provide this insurance certificate within the specified amount of time may result in disqualification of bid.

a. Workers' Compensation Insurance as required by laws and regulations applicable to and covering employees of Contract engaged in the performance of the work under this agreement with a limit of not less than $1,000,000.00.

b. Employers' Liability Insurance protecting Responder against common law liability, in the absence of statutory liability, for employee bodily injury arising out of the master-servant relationship with a limit of not less than $1,000,000.00.

c. Comprehensive General Liability Insurance including products/completed operation with limits of liability of not less than: Bodily Injury $1,000,000.00 per each person, $2,000,000.00 per each occurrence/ aggregate; Property Damage $1,000,000.00 per each occurrence.

d. Excess Liability Insurance Comprehensive General Liability, Comprehensive Automobile Liability and coverages afforded by the policies above, with the minimum limits of $_____ excess of specified limits.

FURNISHED ON RECEIPT OF ORDER

## ATTACHMENT F: ETHICS AND CONFLICT OF INTEREST ACKNOWLEDGEMENT

Public servants are expected to conduct themselves impartially and in a manner that inspires public confidence, while ensuring that responsible contractors have fair and equal access to governmental procurement.

The City of La Marque, Galveston County is committed to protection of government integrity, while also facilitating the recruitment and retention of the skilled personnel necessary to support its operations. To achieve this objective, The City of La Marque, Galveston County has established standards of ethical conduct and conflict of interest policies and expects all vendors, contractors, and subrecipients to adhere to the same core principles as described below.

To achieve these standards, it is essential that those doing business with the City of La Marque, Galveston County also observe the ethical standards prescribed here.

I acknowledge that it is a breach of ethics to attempt to influence any public employee, elected official, or department head to violate the standards of ethical conduct set forth in this code.

I further acknowledge that it is a breach of ethics for any employee of City of La Marque, Galveston County or a vendor doing business with the City of La Marque, Galveston County to participate directly or indirectly in a procurement when the employee or vendor knows that:

A. The employee or any member of the employee's immediate family or household has a substantial financial interest in a company responding to a City of La Marque, Galveston County procurement.

B. A business or organization in which the employee or any member of the employee's immediate family has a financial interest pertaining to the procurement.

I understand that it is a breach of ethics to offer, give, or agree to give any employee of City of La Marque, Galveston County, or for any employee to solicit, demand, accept, or agree to accept from a vendor, a gratuity of consequence or any offer of employment in connection with any decision, approval, disapproval, recommendation, preparation, or any part of a program requirement or purchase request influencing the content of specification or procurement standard, rendering of advice, investigation, auditing, or in any other advisory capacity in any proceeding or controversy, any particular matter pertaining to any program requirement, contract or subcontract, or to any solicitation or proposal therefore pending before City of La Marque, Galveston County.

I acknowledge that it is a breach of ethics for any payment, gratuity, or offer of employment to be made by or on behalf of a subcontractor under a contract to the prime contractor or higher tier subcontractor for any contract for City of La Marque, Galveston County as an inducement for the award of a contract or order.

I certify that I have read and understand the ethical standards set forth by City of La Marque, Galveston County and agree to comply with them in all business dealings with the City of La Marque, Galveston County.

| | |
|---|---|
| SIGNATURE, VENDOR AUTHORIZED REPRESENTATIVE | R. B. Everett & Company<br>COMPANY |
| Rob Via, Business Development Mgr<br>PRINTED NAME, TITLE | 10/25/24<br>DATE |

## ATTACHMENT G: STATEMENT OF CONFLICTS OF INTEREST (IF ANY)

The Respondent vendor must describe any conflicts of interest regarding the goods and or services associated with this solicitation.

**The Respondent shall complete and submit Form CIQ (Attachment I) if the service provider or key employees have conflicts regarding these services.**

The conflict of interest statement is required if the service provider or key employees have conflicts regarding the services and a plan for mitigating the conflict(s).

**The Entity** may in its sole discretion determine whether a conflict disqualifies a firm, and/or whether a conflict mitigation plan is acceptable.

**If the Respondent does not identify a conflict, then they should enter no conflict identified on the Submission Checklist (Attachment A).**

## CONFLICT OF INTEREST QUESTIONNAIRE

**FORM CIQ**

**For vendor doing business with local governmental entity**

**This questionnaire reflects changes made to the law by H.B. 23, 84th Leg., Regular Session.**

This questionnaire is being filed in accordance with Chapter 176, Local Government Code, by a vendor who has a business relationship as defined by Section 176.001(1-a) with a local governmental entity and the vendor meets requirements under Section 176.006(a).

By law this questionnaire must be filed with the records administrator of the local governmental entity not later than the 7th business day after the date the vendor becomes aware of facts that require the statement to be filed. *See* Section 176.006(a-1), Local Government Code.

A vendor commits an offense if the vendor knowingly violates Section 176.006, Local Government Code. An offense under this section is a misdemeanor.

**OFFICE USE ONLY**

Date Received

1 **Name of vendor who has a business relationship with local governmental entity.**

R. B. EVERETT & COMPANY

2 ☐ **Check this box if you are filing an update to a previously filed questionnaire.** (The law requires that you file an updated completed questionnaire with the appropriate filing authority not later than the 7th business day after the date on which you became aware that the originally filed questionnaire was incomplete or inaccurate.)

3 **Name of local government officer about whom the information is being disclosed.**

N/A

Name of Officer

4 **Describe each employment or other business relationship with the local government officer, or a family member of the officer, as described by Section 176.003(a)(2)(A). Also describe any family relationship with the local government officer. Complete subparts A and B for each employment or business relationship described. Attach additional pages to this Form CIQ as necessary.**

A. Is the local government officer or a family member of the officer receiving or likely to receive taxable income, other than investment income, from the vendor?

☐ Yes ☒ No

B. Is the vendor receiving or likely to receive taxable income, other than investment income, from or at the direction of the local government officer or a family member of the officer AND the taxable income is not received from the local governmental entity?

☐ Yes ☒ No

5 **Describe each employment or business relationship that the vendor named in Section 1 maintains with a corporation or other business entity with respect to which the local government officer serves as an officer or director, or holds an ownership interest of one percent or more.**

City of Lamarque is assigned account in sales territory.

6 ☐ Check this box if the vendor has given the local government officer or a family member of the officer one or more gifts as described in Section 176.003(a)(2)(B), excluding gifts described in Section 176.003(a-1).

7 Signature of vendor doing business with the governmental entity

10/25/24

Date

Form provided by Texas Ethics Commission www.ethics.state.tx.us Revised 1/1/2021

## CONFLICT OF INTEREST QUESTIONNAIRE
## For vendor doing business with local governmental entity

A complete copy of Chapter 176 of the Local Government Code may be found at http://www.statutes.legis.state.tx.us/Docs/LG/htm/LG.176.htm. For easy reference, below are some of the sections cited on this form.

**Local Government Code § 176.001(1-a):** "Business relationship" means a connection between two or more parties based on commercial activity of one of the parties. The term does not include a connection based on:

(A) a transaction that is subject to rate or fee regulation by a federal, state, or local governmental entity or an agency of a federal, state, or local governmental entity;

(B) a transaction conducted at a price and subject to terms available to the public; or

(C) a purchase or lease of goods or services from a person that is chartered by a state or federal agency and that is subject to regular examination by, and reporting to, that agency.

**Local Government Code § 176.003(a)(2)(A) and (B):**

(a) A local government officer shall file a conflicts disclosure statement with respect to a vendor if:

***

(2) the vendor:

(A) has an employment or other business relationship with the local government officer or a family member of the officer that results in the officer or family member receiving taxable income, other than investment income, that exceeds $2,500 during the 12-month period preceding the date that the officer becomes aware that

(i) a contract between the local governmental entity and vendor has been executed; or

(ii) the local governmental entity is considering entering into a contract with the vendor;

(B) has given to the local government officer or a family member of the officer one or more gifts that have an aggregate value of more than $100 in the 12-month period preceding the date the officer becomes aware that:

(i) a contract between the local governmental entity and vendor has been executed; or

(ii) the local governmental entity is considering entering into a contract with the vendor.

**Local Government Code § 176.006(a) and (a-1)**

(a) A vendor shall file a completed conflict of interest questionnaire if the vendor has a business relationship with a local governmental entity and:

(1) has an employment or other business relationship with a local government officer of that local governmental entity, or a family member of the officer, described by Section 176.003(a)(2)(A);

(2) has given a local government officer of that local governmental entity, or a family member of the officer, one or more gifts with the aggregate value specified by Section 176.003(a)(2)(B), excluding any gift described by Section 176.003(a-1); or

(3) has a family relationship with a local government officer of that local governmental entity.

(a-1) The completed conflict of interest questionnaire must be filed with the appropriate records administrator not later than the seventh business day after the later of:

(1) the date that the vendor:

(A) begins discussions or negotiations to enter into a contract with the local governmental entity; or

(B) submits to the local governmental entity an application, response to a request for proposals or bids, correspondence, or another writing related to a potential contract with the local governmental entity; or

(2) the date the vendor becomes aware:

(A) of an employment or other business relationship with a local government officer, or a family member of the officer, described by Subsection (a);

(B) that the vendor has given one or more gifts described by Subsection (a); or

(C) of a family relationship with a local government officer.

## ATTACHMENT I: DISCLOSURE OF LOBBYING ACTIVITIES
## SF-LLL CERTIFICATION REGARDING LOBBYING
***(TO BE SUBMITTED WITH EACH BID OR OFFER EXCEEDING $100,000)***

The undersigned certifies, to the best of his or her knowledge and belief, that:

(a) No Federal appropriated funds have been paid or will be paid, by or on behalf of the undersigned, to any person for influencing or attempting to influence an officer or employee of an agency, a Member of Congress, an officer or employee of Congress, or an employee of a Member of Congress in connection with the awarding of any Federal contract, the making of any Federal grant, the making of any Federal loan, the entering into of any cooperative agreement, and the extension, continuation, renewal, amendment, or modification of any Federal contract, grant, loan, or cooperative agreement.

(b) If any funds other than Federal appropriated funds have been paid or will be paid to any person for influencing or attempting to influence an officer or employee of any agency, a Member of Congress, an officer or employee of Congress, or an employee of a Member of Congress in connection with this Federal contract, grant, loan, or cooperative agreement, the undersigned shall complete and submit Standard Form-LLL, "Disclosure of Lobbying Activities," in accordance with its instructions.

(c) The undersigned shall require that the language in paragraphs (a) and (b) of this anti-lobbying certification be included in the award documents for all subawards at all tiers (including subcontracts, subgrants, and contracts under grants, loans, and cooperative agreements) and that all subrecipients shall certify and disclose accordingly.

This certification is a material representation of fact upon which reliance was placed when this transaction was made or entered into. Submission of this certification is a prerequisite for making or entering into this transaction imposed by 31, U.S.C. § 1352 (as amended by the Lobbying Disclosure Act of 1995).

The Contractor, R. B. EVERETT & COMPANY (insert business name), certifies or affirms the truthfulness and accuracy of each statement of its certification and disclosure, if any. In addition, the Contractor understands and agrees that the provisions of 31 U.S.C. § 3801 et seq., apply to this certification and disclosure, if any.

| | |
|---|---|
| **SIGNATURE** | *Robbie* |
| **NAME OF AUTHORIZED AGENT** | ROB VIA |
| **TITLE OF AUTHORIZED AGENT** | BUSINESS DEVELOPMENT MANAGER |
| **DATE** | 10/25/24 |

# DISCLOSURE OF LOBBYING ACTIVITIES – INSTRUCTIONS

Instructions, searching existing data sources, gathering, and maintaining the data needed, and completing and reviewing the collection of information. Send comments regarding the burden estimate or any other aspect of this collection of information, including suggestions for reducing this burden, to the Office of Management and Budget, Paperwork Reduction Project (0348-0046), Washington, DC 20503. Approved by OMB 0348-0046. Complete this form to disclose lobbying activities pursuant to 31 U.S.C. 1352

| 1.Type of Federal Action: | 2. Status of Federal Action: | 3. Report Type: |
|---|---|---|
| ☐ a. contract<br>☐ b. grant<br>☐ c. cooperative agreement<br>☐ d. loan<br>☐ e. loan guarantee<br>☐ f. loan insurance | ☐ a. bid/offer/application<br>☐ b. initial award<br>☐ c. post-award | ☐ a. initial filing<br>☐ b. material change |

| 4. Name and Address of Reporting Entity:<br>☐ Prime ☐ Subawardee Tier _____, *if known:*<br>Name:<br>Street Address:<br>City, State, Zip:<br>**Congressional District, if known:** | 5. If Reporting Entity in No. 4 is Subawardee, Enter Name and Address of Prime:<br>Name:<br>Street Address:<br>City, State, Zip:<br>**Congressional District, if known:** |
|---|---|
| 6. Federal Department/Agency: | 7. Federal Program Name/Description:<br>CFDA Number, *if applicable*: _____ |
| 8. Federal Action Number, *if known:* | 9. Award Amount, *if known:*<br>$ |
| 10a. Name and Address of Lobbying Registrant<br>Name (First, MI, Last): N/A<br>Street Address:<br>City, State, Zip: | 10b. Individuals Performing Services<br>*(including address if different from No. 10a)*<br>Name (First, MI, Last):<br>Street Address: N/A<br>City, State, Zip: |

**11.** Information requested through this form is authorized by Title 31 U.S.C., Section 1352. This disclosure of lobbying activities is a material representation of fact upon which reliance was placed by the tier above when this transaction was made or entered into. This disclosure is required pursuant to 31 U.S.C. 1352. This information will be reported to the Congress semi-annually and will be available for public inspection. Any person who fails to file the required disclosure shall be subject to a civil penalty of not less than $10,000 and not more than $100,000 for each such failure.

**Signature:** Rob Via

**Name:** ROB VIA **Title:** BUSINESS DEVELOPMENT MANAGER

**Telephone:** 281-991-8161 **Date:** 10/25/24

| Federal Use Only | Authorized for Local Reproduction<br>Standard Form – LLL (Rev. 7-97) |
|---|---|

# ATTACHMENT J:TEXAS ETHICS COMMISSION CERTIFICATE OF INTERESTED PARTIES (FORM 1295)

*(TO BE COMPLETED BY THE AWARDED VENDOR PRIOR TO CONTRACT EXECUTION)*

**CERTIFICATE OF INTERESTED PARTIES** **FORM 1295**

Complete Nos. 1 - 4 and 6 if there are interested parties.
Complete Nos. 1, 2, 3, 5, and 6 if there are no interested parties.

**OFFICE USE ONLY**

1 Name of business entity filing form, and the city, state and country of the business entity's place of business.

2 Name of governmental entity or state agency that is a party to the contract for which the form is being filed.

3 Provide the identification number used by the governmental entity or state agency to track or identify the contract, and provide a description of the services, goods, or other property to be provided under the contract.

| 4 Name of Interested Party | City, State, Country (place of business) | Nature of Interest (check applicable) | |
|---|---|---|---|
| | | Controlling | Intermediary |
| | | | |
| | | | |
| | | | |
| | | | |
| | | | |
| | | | |
| | | | |

5 Check only if there is NO Interested Party. ☐

6 UNSWORN DECLARATION

My name is _____, and my date of birth is _____.

My address is _____, _____, _____, _____, _____.
(street) (city) (state) (zip code) (country)

I declare under penalty of perjury that the foregoing is true and correct.

Executed in _____ County, State of _____, on the _____ day of _____, 20_____.
(month) (year)

_____
Signature of authorized agent of contracting business entity
(Declarant)

ADD ADDITIONAL PAGES AS NECESSARY

Form provided by Texas Ethics Commission www.ethics.state.tx.us Revised 12/22/2017

Must file online at www.ethics.state.tx.us/File

FURNISHED ON RECEIPT OF ORDER

## ATTACHMENT K: BIDDER'S CERTIFICATION

In accordance with Texas Government Code Sections 2252.001 through 2252.004 (relating to bids by nonresident contractors), the pertinent portion of the Act has been extracted and is as follows:

1. "Nonresident bidder" refers to a person who is not a resident.
2. "Resident bidder" refers to a person whose principal place of business is in this state, including a contractor whose ultimate parent company or majority owner has its principal place of business in this state.

A governmental entity may not award a governmental contract to a nonresident bidder unless the nonresident underbids the lowest bid submitted by a responsible resident bidder by an amount that is not less than the greater of the following:

1. the amount by which a resident bidder would be required to underbid the nonresident bidder to obtain a comparable contract in the state in which the nonresident's principal place of business is located; or
2. the amount by which a resident bidder would be required to underbid the nonresident bidder to obtain a comparable contract in the state in which a majority of the manufacturing relating to the contract will be performed.

I certify that R. B. EVERETT & COMPANY (Company Name) is a

[X] **Resident bidder of Texas** as defined in Section 2252.001(4), Texas Government Code,

**OR**

[ ] **Nonresident bidder** as defined in Section 2252.001(3), Texas Government Code, and our principal place of business is located at _____ (City and State).

**Note: If the Respondent is an out-of-state company, a Certificate of Authority from the Secretary of State to do business in Texas must be provided.**

| | |
|---|---|
| **SIGNATURE** |  |
| **NAME OF AUTHORIZED AGENT** | ROB VIA |
| **TITLE OF AUTHORIZED AGENT** | BUSINESS DEVELOPMENT MANAGER |
| **DATE** | 10/25/24 |

## ATTACHMENT L: NON-COLLUSION AFFIDAVIT

### NON-COLLUSION AFFIDAVIT

STATE OF TEXAS §
§
COUNTY OF HARRIS §

By the signature below, the signatory for the bidder certifies that neither he/she nor the firm, corporation, partnership or institution represented by the signatory or anyone acting for the firm bidding this project has violated the antitrust laws of this State, codified at Section 15.01, *et seq.*, Texas Business and Commerce Code, or the Federal antitrust laws, nor communicated directly or indirectly the bid made to any competitor or any other person engaged in the same line of business, nor has the signatory or anyone acting for the firm, corporation or institution submitting a bid committed any other act of collusion related to the development and submission of this bid proposal.

Signature: _____

Printed Name: ROB VIA

Title: BUSINESS DEVELOPMENT MANAGER

Company: R. B. EVERETT & COMPANY

Date: 10/25/24

SUBSCRIBED and sworn to before me the undersigned authority by Rob Via on the 25th day of October, 20 24 on behalf of said bidder.

RITA WEBB
Notary Public, State of Texas
Comm. Expires 10-15-2027
Notary ID 137497-0

_____
Notary Public in and for the
State of Texas

My commission expires: 10/15/27

# APPENDIX I – SAMPLE CONTRACT

## SAMPLE CONTRACT – INVITATION FOR BID NON-CONSTRUCTION ONLY
### CITY OF LA MARQUE
### AMERICAN RESCUE PLAN ACT (ARPA) PROGRAM
### GENERAL SERVICES, SUPPLIES, AND/OR EQUIPMENT CONTRACT

| | |
|---|---|
| **Vendor Name** | Vendor Name |
| **Vendor Unique Entity Identifier (UEI) if available** | XXXXXXXXXXXX |
| **Period of Performance Start Date** | |
| **Period of Performance End Date** | |
| **Amount of Federal Funds Obligated by this Agreement** | $000,000 |
| **Assisted Listing Number (ALN) #** 21.027 | **FAIN #** |

### INTRODUCTION

THIS CONTRACT for General Services, Supplies, and/or Equipment ("Contract") is made and entered into this [Date], by and between [City of La Marque], Texas, hereinafter referred to as the "Entity" and [Vendor Name], hereinafter referred to as the "Vendor." Entity and Vendor are sometimes each referred to as a "Party" and collectively "Parties."

The following recitals are incorporated in and made a part of this Contract.

WHEREAS, on March 11, 2021, President Biden signed the U.S. Senate-amended H.R. 1319 (P.L. 117-2) known as the American Rescue Plan Act (hereinafter "ARPA"); and

WHEREAS, under ARPA Section 603 (c)(1)(A) and (3) and the Final Rule 31 CFR 35.6, recipients may use Coronavirus State and Local Fiscal Recovery Funds ("SLFRF") to allocate funds for the provision of government services and/or make necessary investments in water, sewer, and broadband infrastructure; and

WHEREAS, the Entity has determined that it has the objective of providing services to its residents; and

WHEREAS, the Entity has been awarded ARPA funds by the U.S. Department of the Treasury ("Treasury") which have been distributed to the Entity from ARPA for covered costs and eligible expenses to be incurred during the period which began on March 3, 2021 (the date ARPA became law) until December 31, 2024 (to be fully expended by December 31, 2026); and

WHEREAS, the Entity desires to disburse funds to the Vendor to perform certain services or provide certain supplies or equipment in connection therewith as set forth in this Contract and in the Scope of Services attached hereto; and

WHEREAS, Vendor has represented to the Entity that it is duly qualified, eligible, and willing to provide the services identified herein and in the Scope of Services attached hereto.

NOW, THEREFORE, in consideration of the foregoing recitals and the terms and conditions set forth herein, the Parties hereto do mutually agree as follows:

## SECTION 1. CONTRACT ADMINISTRATION

### SECTION 1.1 CONTACT INFORMATION & NOTICES

For the purposes of this Contract, the Entity's Representative listed below will serve as the primary point of contact for the Vendor. All required reports and communication shall be directed to this liaison and other local personnel as appropriate. The Vendor shall designate a Representative to act on Vendor's behalf for all purposes, including execution of Change Orders and Requests for Payment.

Any notice or communication required or permitted to be given under this Contract must be in writing. The initial contact information of the parties, which one party may change by giving written notice to the other party, are as follows:

| | | | |
|---|---|---|---|
| **Entity Name** | City of La Marque | **Vendor Name** | R. B. EVERETT & COMPANY |
| **Entity Address 1** | 1111 Bayou Road | **Vendor Address 1** | 8211 Red Bluff Rd |
| **Entity Address 2** | La Marque, Texas 77568 | **Vendor Address 2** | Pasadena, Tx 77507 |
| **Entity Representative for Project** | | **Vendor Representative for Project** | |
| **Name** | Amanda Hobby | **Name** | Rob Via |
| **Title** | Assistant Director of Public Works | **Title** | Business Development Mgr |
| **Phone** | (409) 795-7996 | **Phone** | 281-991-8161 |
| **Email** | a.hobby@cityoflamarque.org | **Email** | rvia@rbeverett.com |
| **Entity Billing Contact** | | **Vendor Billing Contact** | |
| **Name** | Gina Galicia | **Name** | Same as Representative |
| **Title** | Accounts Payable Clerk | **Title** | |
| **Phone** | (409) 938-9214 | **Phone** | |
| **Email** | g.galicia@cityoflamarque.org | **Email** | |

## SECTION 1.2 PARTS INCORPORATED

Parts Incorporated. In addition to the Exhibits identified below which are incorporated into this Contract, it is understood and agreed that additional terms of this Contract are to be performed in accordance with the proposal documents (scope of work, images, and specifications), submitted proposal response and related exhibits, affidavits, addendums, statutory requirements, and the ARPA Terms & Conditions.

Exhibits

| | |
|---|---|
| Exhibit A1 | Scope of Work |
| Exhibit A2 | Payment & Pricing Schedule |
| Exhibit A3 | Request for Payment |
| Exhibit B | ARPA Required Contract Provisions |
| Exhibit C | Other Relevant Information/Special Conditions for Construction |
| Exhibit D | Insurance Certificate |
| Exhibit E | Bid, Performance, and Payment Bonds |
| Exhibit F | Eligibility Verification (SAM.gov) |
| Exhibit G | Certificate of Interested Parties (Form 1295) |

## SECTION 1.4 CONTRACT DOCUMENTS

By reference, the Contract Documents consist of:

a. This Contract and all exhibits listed, contained, or referenced in this Contract.

b. All Addenda issued before the Effective Date of this Contract;

c. All Alternates accepted by the Entity before the Effective Date of this Contract;

d. All Change Orders issued after the Effective Date of this Contract; and

e. The response submitted by Vendor in response to the IFB issued by Entity for this Project.

The Contract and Exhibit Documents form the entire and integrated Contract between Entity and Vendor, and supersede all prior negotiations, representations, or agreements, written or oral. To the extent of any conflict between Vendor's Proposal and any other Contract Document, the Contract Documents shall govern.

If there is an irreconcilable difference between or among the various documents that make up the Contract Documents, the interpretation that provides for a higher quality of material and/or workmanship will prevail over all other interpretations.

### 1.4.1 Term of Contract and Delivery Schedule – Commencement of Work

Entity shall issue a Notice to Proceed (NTP) identifying the date for commencement of the Work. Vendor shall achieve substantial completion of the Work within 90 calendar days after the commencement date; as such completion date may be extended by approved Change Orders. THE TIME SET FOR COMPLETION OF THE WORK IS AN ESSENTIAL ELEMENT OF THE CONTRACT. In any event, all of the services required and performed hereunder shall be completed no later than December 31, 2024.

### 1.4.2 Pre-Existing Conditions

Vendor acknowledges that it has been provided access to the existing improvements and conditions on the Project site and that it has thoroughly investigated those conditions. Vendor's investigation was instrumental in preparing its bid to perform the Work. Vendor shall not make or be entitled to any adjustment to the Contract Time or the Contract Sum arising from Project conditions that the Vendor discovered or, in the exercise of reasonable care, should have discovered

in Vendor's investigation.

1.4.3 Liquidated Damages

Vendor and Entity agree that a breach of this Contract as to completion time will cause damage to the Entity, but further agree that such damage cannot be accurately measured. Therefore, the Parties agree that $100.00 shall be subtracted from the Contract amount for each and every calendar day that the Work or any portion of the Work remains uncompleted after the expiration of the time period specified in the Notice to Proceed, or as extended by a change order.

1.4.4 Dispute Resolution

Disputes arising under the Contract shall be submitted to a process of resolution pursuant to alternative dispute resolution practices, such as mediation, binding arbitration, or non-binding arbitration pursuant to industry standards, prior to being submitted to a court for adjudication. It is understood that the Entity shall have the right to request mediation if services being provided are deemed deficient in any way.

1.4.5 Acquisition, Merger, Sale and/or Transfer of Business, etc.

It is understood by all parties that if, during the life of the Contract, the Vendor disposes of his/her business concern by acquisition, merger, sale, and or/transfer or by any means conveys his/her interest(s) to another party, all obligations are transferred to that new party. In this event, the new vendor will be required to submit all documentation/legal instruments that were required in the original bid/contract. Any change shall be approved by the Entity, who retains the right to reject the transfer of the contract.

1.4.6 Termination of Contract For Cause

This Contract may be terminated by the Entity for cause, including any nonperformance by the Vendor; failure of the Vendor to fulfill in a timely and proper manner its obligations under this Contract; or violation of any of the covenants, agreements, or stipulations of the Contract, upon thirty (30) days' written notice to Vendor including a statement of the reasons, therefore. The determination of the Entity as to the cause of termination and the appropriateness thereof shall be final and binding upon both Entity and Vendor. Cause for termination shall include any material failure by Vendor to comply with any terms of this Contract.

a. In such event, all finished or unfinished services, documents, data, maps, studies, surveys, drawings, models, photographs, and reports prepared by the Vendor under this Contract shall, at the option of the Entity, become its property, and the Vendor shall be entitled to receive just and equitable compensation for any work satisfactorily completed hereunder.

b. Notwithstanding the above, the Vendor shall not be relieved of liability to the Entity for damages sustained by the Entity by virtue of any breach of this Contract by the Vendor, and the Entity may withhold any payments to the Vendor for the purposes of set-off until such time as the exact amount of damages due the Entity from the Vendor is determined.

c. The Vendor agrees to indemnify and hold the Entity harmless from any liability to subcontractors or suppliers concerning payment for work performed or goods supplied arising out of the lawful termination of the Contract by the Entity under this provision.

d. In case of default by the Vendor, the Entity may procure the goods or services from other sources and hold the Vendor responsible for any excess cost.

e. Continuation of the terms of the Contract beyond the fiscal year is contingent on availability of funds in the following year's budget. In the event of unavailability of such funds, the Entity reserves the right to cancel the Contract.

f. If this Contract is terminated for cause, excluding funding discontinuance or disapproval, Vendor shall have the right to attempt to cure its failure during the thirty (30) day period prior to termination to the satisfaction of the Entity at the Entity's sole discretion.

### 1.4.7 Termination of Contract For Convenience of the Entity

The Entity may terminate this Contract at any time by giving at least thirty (30) days' notice in writing to the Vendor. If the Vendor is terminated by the Entity as provided herein, the Vendor will be paid for actual services provided or delivered purchases that are determined acceptable at the sole discretion of the Entity, less payments of compensation previously made. Vendor

### 1.4.8 Post Expiration and Termination Procedures

Upon expiration or in the event of a prior termination, all remaining and unspent ARPA funds, shall immediately become the sole and separate property of the Entity and the Vendor shall perform all acts and execute all instruments necessary to transfer and assign such funds to the Entity. All finished or unfinished documents, data, studies, reports, and work products prepared by the Vendor under this Contract or with grant funds shall, at the option of the Entity, become Entity's property.

### 1.4.9 Transitional Period

In the event services are terminated by contract expiration or by voluntary termination by either the Vendor or the Entity, the Vendor shall continue all terms and conditions of said Contract for a period not to exceed thirty (30) days at the Entity's request.

### 1.4.10 Ownership of Material

The Entity shall retain all of its rights and interest in any and all documents and property, both hard copy and digital furnished by the Entity to the Vendor for the purpose of assisting the Vendor in the performance of this Contract. All such items shall be returned immediately to the Entity at the expiration or termination of the Contract or completion of any related services pursuant thereto, whichever comes first. None of the documents and/or property shall, without the written consent of the Entity, be disclosed to others or used by the Vendor or permitted by the Vendor to be used by their parties at any time except in the performance of the resulting Contract. Ownership of all data, materials and documentation originated and prepared for the Entity pursuant to this Contract shall belong exclusively to the Entity. All data, reports, computerized information, programs, and materials related to this Project shall be delivered to and become the property of the Entity upon completion of the Project. The Vendor shall not have the right to use, sell, or disclose the total of the interim or final work products, or make available to third parties, without the prior written consent of the Entity.

## SECTION 1.5 CONTRACT SUM AND PAYMENTS

The Vendor shall be compensated per the schedule below. Payment to the Vendor shall be based on satisfactory completion of identified services and/or deliverables and payment/invoicing terms as stated in the IFB, or as mutually agreed upon and contained in this Contract. Payment is expressly contingent upon the availability of ARPA funding.

### 1.5.1 Contract Sum

Entity shall pay Vendor for performance of its obligations under this Contract, including the Base Proposal and Alternate Proposals (if any), the sum of [Spelled out dollar amount here] ($000,000.00), and make payment in accordance with the provisions of this Section.

### 1.5.2 Payment & Pricing Schedule

A Payment & Pricing Schedule (see **Exhibit A2**) subdividing the Project into its respective parts (f needed), and which includes values for all items comprising the Project will serve as the basis for payments made to Vendor.

### 1.5.3 Vendor's Payment Obligations

Vendor shall promptly pay all bills for labor and material performed and furnished by others in connection with this Contract.

a. Firm shall submit an invoice upon completion of each milestone. Deliverables will be considered complete only upon inspection and written acceptance by the Entity. Each invoice shall include deliverable(s) completed and

## SECTION 3. SCOPE OF WORK

### SECTION 3.1 GENERAL

Vendor has overall responsibility for and shall furnish all materials, equipment, tools, and labor necessary and reasonably inferable to complete the Work, or any phase of the Work, in accordance with Entity's requirements and the terms of the Contract Documents, including the Drawings, Specifications, Addenda, details, and other documents prepared by Vendor and listed in the attached Exhibits, if applicable.

Vendor's duties as set forth herein shall at no time be in any way diminished by reason of any approval by the Entity nor shall Vendor be released from any liability by reason of such approval by Entity, it being understood that Entity at all times is ultimately relying upon Vendor's skill and knowledge in performing the services required hereunder.

### SECTION 3.2 PROJECT CONTROL

Vendor shall supervise and direct the Work and shall be solely responsible for means, methods, techniques, sequences, and procedures for the Work. Vendor shall promptly correct any defective or non-conforming Work at Vendor's sole expense and without cost to Entity.

### SECTION 3.3 SUBVENDORS

Vendor shall award and enter into all Subcontracts necessary and appropriate to provide all labor and materials for the scope of work.

a. Vendor shall monitor the Work of the Subcontractors as required and coordinate such Work with a goal to attain Substantial Completion not later than the date for Substantial Completion and at a cost not to exceed the Contract Sum.

b. Upon request, Vendor shall provide Entity with complete, unaltered copies of all Subcontracts, and all amendments thereto.

### SECTION 3.4 HUB SUBCONTRACTING PLAN

Vendor shall comply with the requirements of the HUB Subcontracting Plan and shall not make any changes to the HUB Subcontracting Plan without Entity's written approval.

### SECTION 3.5 KEY TASKS

a. Provide services and purchase of equipment in accordance with delivery schedules and other prescribed timelines herein.

b. Provide a warranty on all purchased equipment.

c. Provide excellent customer service. Firm shall be responsive to requests and communicate on a regular basis with the Entity.

d. Provide and maintain all original and copies of supporting documentation.

e. Furnish progress reporting as determined or requested by the Entity.

f. Support and assist the Entity during state/federal monitoring or auditing activities, including providing financial information, reports, and other requests that may be required.

### SECTION 3.6 SCHEDULING

Vendor is solely responsible for delivery of the services/equipment in accordance with the Contract Documents on or before the date specified in the Schedule.

### SECTION 3.7 NON-CONFORMING WORK

Entity may reject any defective or non-conforming Work on the Project of which Entity becomes aware and Vendor shall promptly correct any such defect at Vendor's own cost without increasing the Contract Sum. Upon discovering that any portion of the Work does not conform with Entity's design concept and/or requirements, including the Design Guidelines and Standard Specifications, due to an error or omission in any Construction Document materials prepared or furnished by or on behalf of Vendor, Vendor shall promptly correct such condition at no additional cost to Entity. If Vendor refuses or fails to correct (or improperly corrects) any such condition within a reasonable time after notice, Entity may cause the condition to be corrected and offset the cost of such correction against any monies owed to Vendor; provided, however, if no monies are owed Vendor at the time the condition is discovered or at the time the condition is corrected by Entity, Vendor shall promptly reimburse the Entity for all expenses incurred to correct the condition. Vendor shall warranty all corrective Work, whether performed by or through Vendor or by a third party retained by Entity in accordance with the immediately preceding sentence due to Vendor's refusal or failure to correct properly any non-conforming Work.

### SECTION 3.8 INDEMNIFICATION

Vendor covenants and agrees to indemnify, hold harmless and defend, at its own sole expense, the Entity and its officers, agents, servants, and employees from and against any and all claims or suits for property loss or damage and/or personal injury, including death, to any and all persons, of whatsoever kind or character, whether real or asserted, arising out of or in connection with the execution, performance, attempted performance, or nonperformance of the services under this Contract and/or the operations, activities, and services of the activities described herein; and Vendor hereby assumes all liability and responsibility of the entity and its officers, agents, servants, and employees for any and all claims or suits for property loss or damage and/or personal injury, including death, to any and all persons, of whatsoever kinds or character, whether real or asserted, arising out of or in connection with the execution, performance, attempted performance, or nonperformance of the services or this Contract and/or the operations, activities, and services described herein. Vendor likewise covenants and agrees to and does hereby indemnify and hold harmless entity from and against any and all injury, damage, or destruction of property of entity, arising out of or in connection with all acts or omissions of Vendor, its officers, members, agents, employees, contractors, subcontractors, invitees, licensees, and project participants. Vendor agrees to and shall release Entity, its agents, employees, officers, and legal representatives from all liability for injury, death, damage, or loss to persons or property sustained in connection with or incidental to performance of the services under this Contract.

Vendor shall require all of its contractors and subcontractors to include in its contracts and subcontracts a release and indemnity in favor of the Entity in substantially the same form as above. The indemnity and liability release provided for above shall not apply to any liability resulting from the sole negligence or fault of the Entity, its officers, agents, employees or separate Vendors, and in the event of joint and concurring negligence or fault of the Entity and Vendor, responsibility and indemnity, if any, shall be apportioned in accordance with the laws of the State of Texas, without waiving any governmental immunity available to the entity under Texas law and without waiving any defenses of the parties under Texas law.

The provisions of this section are solely for the benefit of the parties and are not intended to create or grant any rights, contractual or otherwise, to any other person or entity. This section survives termination or expiration of this Contract.

### SECTION 3.9 INSURANCE & BONDING

If applicable, Vendor shall provide Insurance and Bid, Performance, and Payment Bonds as prescribed by Entity in the Solicitation documentation and included here as **Exhibit D** and **Exhibit E.**

## SECTION 4. REQUIRED PROVISIONS

The Vendor shall comply with the following items:

### SECTION 4.1 TERMS AND CONDITIONS

The Vendor agrees to comply with the requirements of Section 503 of the American Rescue Plan Act (ARPA), regulations adopted by Treasury pursuant to Section 603(f) of the Act, and guidance issued by Treasury regarding the foregoing. Vendor also specifically agrees to comply with the ARPA Terms & Conditions attached to this Contract in **Exhibit B.**

## SECTION 4.2 DEBARMENT AND SUSPENSION

Vendor has provided proof of registration, active/good standing, and non-debarment status in the System for Award Management. Should this status change, the Vendor must notify the Entity immediately.

## SECTION 4.3 ASSURANCES OF COMPLIANCE WITH TITLE VI

The Vendor shall comply with Title VI of the Civil Rights Act of 1964, which prohibits recipients of federal financial assistance from excluding from a program or activity, denying benefits of, or otherwise discriminating against a person on the basis of race, color, or national origin (42 U.S.C. § 2000d et seq.), as implemented by the Department of the Treasury's Title VI regulations, 31 CFR Part 22, which are herein incorporated by reference and made a part of this contract. Title VI also includes protection to persons with "Limited English Proficiency" in any program or activity receiving federal financial assistance, 42 U.S.C. § 2000d et seq., as implemented by the Department of the Treasury's Title VI regulations, 31 CFR Part 22, and herein incorporated by reference and made a part of this contract.

## SECTION 4.4 LOBBYING CERTIFICATION & DISCLOSURE

No Federal appropriated funds have been paid or will be paid, by or on behalf of the undersigned, to any person for influencing or attempting to influence an officer or employee of an agency, a Member of Congress, an officer or employee of Congress, or an employee of a Member of Congress in connection with the awarding of any Federal contract, the making of any Federal grant, the making of any Federal loan, the entering into of any cooperative agreement, and the extension, continuation, renewal, amendment, or modification of any Federal contract, grant, loan, or cooperative agreement.

## SECTION 4.5 ETHICS MATTERS

Vendor and its employees, agents, representatives, and subcontractors have ready and understand the Entity's Conflict of Interest Policy, State of Texas Standards of Conduct and Conflict of Interest Provisions available at Government Code Chapter 572: Personal Financial Disclosure, Standards of Conduct, and Conflict of Interest (state.tx.us), and applicable state ethics laws and rules available. Neither Vendor nor its employees, agents, representatives, or subcontractors will assist or cause Entity employees to violate the Conflict of Interest policies, provisions described by State of Texas Standards of Conduct and Conflict of Interest Provisions, or applicable state ethics laws or rules.

## SECTION 4.6 MAINTENANCE AND ACCESS TO RECORDS

The Vendor shall maintain records and financial documents sufficient to evidence in compliance with Section 603(c) of the Act, Treasury's regulations implementing that section, and guidance issued by Treasury regarding the foregoing.

The Treasury Office of Inspector General, the Government Accountability Office and the Texas Office of the State Comptroller, or their authorized representatives, shall have the right of access to records (electronic and otherwise) of the Vendor in order to conduct audits or other investigations and all records shall be made available upon request. Records shall be maintained by the Vendor for a period of five (5) years after all funds have been expended or returned to the Treasury, whichever is later.

# SECTION 5. MISCELLANEOUS PROVISIONS

## SECTION 5.1 GENERAL

a. In any case one or more of the provisions contained in this Contract shall for any reason be held to be invalid, illegal, or unenforceable in any respect, such invalidity, illegality, or unenforceability shall not affect any other provision thereof and this Contract shall be construed as if such invalid, illegal, or unenforceable provision had never been contained herein.

b. If any action at law or in equity is necessary to enforce or interpret the terms of this Contract, the prevailing party shall be entitled to reasonable attorney's fees, costs, and necessary disbursements in addition to any other relief to which such party may be entitled.

c. This Contract may be amended by mutual agreement of the parties hereto and a writing to be attached to be

incorporated into this Contract.

d. Licenses, Permits, Taxes, Fees, Laws, and Regulations

i. Vendor warrants that it will obtain, maintain in effect, and pay the cost for all licenses, permits, or certifications that may be necessary for Vendor's performance of this Contract.

ii. Vendor will be responsible for the payment of all taxes, excises, fees, payroll deductions, employee benefits (if any), fines, penalties or other payments required by federal, state, or local law or regulation in connection with Vendor's performance of this Contract.

iii. Vendor will comply with and will be responsible for requiring its officers and employees to comply with all applicable federal, state, and local laws and regulations, and the rules and regulations of the Entity.

## SECTION 5.2 CAPACITY TO PERFORM

By execution of this Contract, Vendor is certifying that they have the capacity to perform and complete the Scope of Work as provided.

## SECTION 5.3 LIMITATION OF LIABILITY

Except for the obligation of Entity to pay Vendor certain fees, costs, and expenses to the extent expressly set forth in this Contract, the Entity shall have no liability to Vendor or to anyone claiming through or under Vendor by reason of the execution or performance of this Contract. Notwithstanding any obligation or liability of Entity to Vendor, no present or future partner or affiliate of the Entity or any agent, officer, director, or employee of the Entity or anyone claiming under the Entity, has or shall have any personal liability to Vendor or to anyone claiming through or under Vendor by reason of the execution or performance of this Contract.

## SECTION 5.4 ASSIGNMENT

This Contract is a personal service contract for the services of Vendor, and neither Vendor's interest in this Contract (including, but not limited to Vendor's fees due hereunder), nor Vendor's duties hereunder may be assigned or delegated to a third party except as specifically set forth in this Contract.

## SECTION 5.5 GOVERNING LAW AND VENUE

The Vendor agrees to comply with the requirements of Section 603 of the Act, regulations adopted by Treasury pursuant to Section 603(f) of the Act, and guidance issued by Treasury regarding the foregoing.

Additionally, all applicable local government codes for the State of Texas also apply to this Contract. All equipment, supplies, and work furnished under this Contract shall comply with applicable laws, ordinances, and regulations. Vendor shall obtain and pay for such permits and inspections as are required for the legal performance of this work, unless otherwise specified. Vendor shall comply with all federal and state laws and Entity's Ordinances and Codes applicable to the Vendor's operation under this Contract. These Specifications and the Contract resulting here from shall be fully governed by the laws of the State of Texas and shall be fully performable in La Marque (Entity Name), Texas, where venue for any proceeding arising hereunder will lie.

This Contract will be governed by the laws of the State of Texas without reference to its conflicts of law provisions. Venue for any suits arising from this Contract will be in a court of competent jurisdiction in Galveston County, Texas.

## SECTION 5.6 WAIVERS

No delay or omission by either Party in exercising any right or power accruing upon the non-compliance or failure of performance by the other Party of any provision of this Contract or the Contract Documents will impair any such right or power or be construed to be a waiver thereof. A waiver by either Party of any of the covenants, conditions, or agreements of this Contract or any of the Contract Documents to be performed by the other party will not be construed to be a waiver of any subsequent breach of this Contract or the Contract Documents or of any other covenant, condition or agreement contained in this Contract or the Contract Documents.

## SECTION 5.7 SEVERABILITY

If any provision of this Contract is for any reason be held invalid or unenforceable in any respect, such invalidity or unenforceability shall not affect any other provision of this Contract and this Contract will be construed as if such invalid or unenforceable provision had not been included herein.

**SECTION 5.8 NEW LAWS**

Parties agree that if there is a change in any laws, rules, or regulations affecting the performance related to this Contract and enacted after the Effective Date of this Contract, the Parties will enter into good faith negotiations to renegotiate the affected terms of this Contract. N/A

BY: _____
(Entity Official)

_____
(Printed Name)

_____
(Title)

_____
(Date)

BY: _____
(Vendor's Authorized Representative)

_____
(Printed Name)

_____
(Title)

_____
(Date)

## SECTION 6. EXHIBITS

**THE FOLLOWING DOCUMENTS MUST BE COMPLETED AND ATTACHED TO THE CONTRACT:**

| | |
|---|---|
| Exhibit A1 | Scope of Work |
| Exhibit A2 | Payment & Pricing Schedule |
| Exhibit A3 | Request for Payment |
| Exhibit B | ARPA Required Provisions (ARPA Terms & Conditions) |
| Exhibit C | Other Relevant Information |
| Exhibit D | Insurance Certificate (if applicable) |
| Exhibit E | Bid, Performance, and Payment Bonds (if applicable) |
| Exhibit F | Eligibility Verification (SAM.gov) |
| Exhibit G | Certificate of Interested Parties (Form 1295) |

## Exhibit A1 – Scope of Work

To be populated with solicitation Scope of Work

N/A

## Exhibit A2 – Payment & Pricing Schedule

The terms for payment for the contract are as follows:

**Payment Schedule:**

Payment will be made within 30 days of a Request for Payment and only after delivery of all services and/or purchases and acceptance by the Entity.

**Pricing Schedule:**

Prices for all goods and/or services shall be all inclusive.

Entity is an agency of the State of Texas and materials and services utilized in the provision of services or purchases may be exempt from state and local taxes. Vendor is responsible for taking full advantage of all tax exemptions applicable to the Project. Entity will deduct from the Requests for Payment and from the Request for Final Payment any taxes paid for materials or services that were entitled to tax exemption.

**Lump Sum Price:** Vendor shall provide pricing in the table below to complete the scope of services contained in **Exhibit A1**, Scope of Work, in accordance with the specifications contained in this document. Costs include all applicable services (i.e. labor, materials, profit, bonding, insurance, permitting, general conditions, and other costs) to provide a turnkey product.

(Note to Entity: Component pricing should be based on the identified components of the scope of work contained in **Exhibit A1**). An example is provided below:

| SCOPE OF WORK | PRICE |
|---|---|
| | $ |
| N/A | $ |
| | $ |
| | $ |
| **TOTAL LUMP SUM PRICE (TOTAL OF ABOVE LINE ITEMS)** | $ |

## Exhibit A3 – Request for Payment

| | | | |
|---|---|---|---|
| **Project Name:** | | | |
| **Vendor Name:** | | | |
| **Date of Request:** | | | |
| **Contact Name:** | | | |
| **Contact Phone:** | | **Contact Email:** | |

| Item for Payment | Description | Unit Cost or Percent Complete | # of Units | Total Amount |
|---|---|---|---|---|
| | | | | |
| | | | | |
| | | | | |
| **TOTAL** | | | | |

| X | Attachments |
|---|---|
| | |
| | |

| Submitted By | |
|---|---|
| **Name and Title** | |
| **Signature** | |

**CERTIFICATION:** I certify that this Request for Payment contains costs associated with the provision of services in accordance with the terms of the contract. I also certify that all required documentary evidence has been submitted along with the Request for Payment as instructed, including any documentation associated with requirement to pay prevailing wages.

By signing this Request for Payment, I certify to the best of my knowledge and belief that information provided in this Request is true, complete, and accurate. I am aware that any false, fictitious, or fraudulent information, or the omission of any material fact, may subject me to criminal, civil or administrative penalties for fraud, false statements, false claims or otherwise.

**WARNING**: Section 1001 of Title 18 U.S. code makes it a criminal offense to make willful, false statements or misrepresentation of any material fact involving the use of or obtain federal funds.

# Exhibit B – ARPA Required Provisions

2 CFR 200.327 Contract provisions. The Non-Federal entity's contracts should contain applicable provisions described in Appendix II to Part 200—Contract Provisions for Non-Federal Entity Contracts Under Federal Awards. The Non-Federal entity's contracts must contain the provisions described in Appendix II to Part 200—Contract Provisions for Non-Federal Entity Contracts Under Federal Awards, as applicable.

| THRESHOLD | PROVISION | CITATION | PROVISION APPLIES TO |
|---|---|---|---|
| | 2 CFR 200 Appendix II (A-L) | | |
| >$250,000 (Simplified Acquisition Threshold) | Contracts for more than the simplified acquisition threshold, which is the inflation adjusted amount determined by the Civilian Agency Acquisition Council and the Defense Acquisition Regulations Council (Councils) as authorized by 41 U.S.C. 1908, must address administrative, contractual, or legal remedies in instances where contractors violate or breach contract terms, and provide for such sanctions and penalties as appropriate. | 2 CFR 200 APPENDIX II (A) | Contractor RFP/IFB<br>Contractor RFQ<br>Subrecipients |
| >$10,000 | All contracts in excess of $10,000 must address termination for cause and for convenience by the Non-Federal entity including the manner by which it will be affected and the basis for settlement. | 2 CFR 200 APPENDIX II (B) | Contractor RFP/IFB<br>Contractor RFQ<br>Subrecipients |
| None | Equal Employment Opportunity. Except as otherwise provided under 41 CFR Part 60, all contracts that meet the definition of "federally assisted construction contract" in 41 CFR Part 60-1.3 must include the equal opportunity clause provided under 41 CFR 60-1.4(b), in accordance with Executive Order 11246, "Equal Employment Opportunity" (30 FR 12319, 12935, 3 CFR Part, 1964-1965 Comp., p. 339), as amended by Executive Order 11375, "Amending Executive Order 11246 Relating to Equal Employment Opportunity," and implementing regulations at 41 CFR part 60, "Office of Federal Contract Compliance Programs, Equal Employment Opportunity, Department of Labor."<br>41 CFR 60-1.4 Equal opportunity clause.<br>(b) Federally assisted construction contracts. (1) Except as otherwise provided, each administering agency shall require the inclusion of the following language as a condition of any grant, contract, loan, insurance, or guarantee involving federally assisted construction which is not exempt from the requirements of the equal opportunity clause:<br>The [recipient] hereby agrees that it will incorporate or cause to be incorporated into any contract for construction work, or modification thereof, as defined in the regulations of the Secretary of Labor at 41 CFR Chapter 60, which is paid for in whole or in part with funds obtained from the Federal Government or borrowed on the credit of the Federal Government pursuant to a grant, contract, loan, insurance, or guarantee, or undertaken pursuant to any Federal program involving such grant, contract, loan, insurance, or guarantee, the following equal opportunity clause:<br>During the performance of this contract, the contractor agrees as follows:<br>(9) The contractor will not discriminate against any employee or applicant for employment because of race, color, religion, sex, sexual orientation, gender identity, or national origin. The contractor will take affirmative action to ensure that applicants are employed, and that employees are treated during employment without regard to their race, color, religion, sex, sexual orientation, gender identity, or national origin. Such action shall include, but not be limited to the following:<br>Employment, upgrading, demotion, or transfer; recruitment or recruitment advertising; layoff or termination; rates of pay or other forms of compensation; and selection for training, including apprenticeship. The contractor agrees to post in conspicuous places, available to employees and applicants for employment, notices to be provided setting forth the provisions of this nondiscrimination clause.<br>(10) The contractor will, in all solicitations or advertisements for employees placed by | 2 CFR 200 APPENDIX II (C) and 41 CFR §60-1.4(b) | Contractor RFP/IFB<br>Contractor RFQ<br>Subrecipients |

| THRESHOLD | PROVISION | CITATION | PROVISION APPLIES TO |
|---|---|---|---|
| | or on behalf of the contractor, state that all qualified applicants will receive consideration for employment without regard to race, color, religion, sex, sexual orientation, gender identity, or national origin.<br>(11) The contractor will not discharge or in any other manner discriminate against any employee or applicant for employment because such employee or applicant has inquired about, discussed, or disclosed the compensation of the employee or applicant or another employee or applicant. This provision shall not apply to instances in which an employee who has access to the compensation information of other employees or applicants as a part of such employee's essential job functions discloses the compensation of such other employees or applicants to individuals who do not otherwise have access to such information, unless such disclosure is in response to a formal complaint or charge, in furtherance of an investigation, proceeding, hearing, or action, including an investigation conducted by the employer, or is consistent with the contractor's legal duty to furnish information.<br>(12) The contractor will send to each labor union or representative of workers with which he has a collective bargaining agreement or other contract or understanding, a notice to be provided advising the said labor union or workers' representatives of the contractor's commitments under this section and shall post copies of the notice in conspicuous places available to employees and applicants for employment.<br>(13) The contractor will comply with all provisions of Executive Order 11246 of September 24, 1965, and of the rules, regulations, and relevant orders of the Secretary of Labor.<br>(14) The contractor will furnish all information and reports required by Executive Order 11246 of September 24, 1965, and by rules, regulations, and orders of the Secretary of Labor, or pursuant thereto, and will permit access to his books, records, and accounts by the administering agency and the Secretary of Labor for purposes of investigation to ascertain compliance with such rules, regulations, and orders.<br>(15) In the event of the contractor's noncompliance with the nondiscrimination clauses of this contract or with any of the said rules, regulations, or orders, this contract may be canceled, terminated, or suspended in whole or in part and the contractor may be declared ineligible for further Government contracts or federally assisted construction contracts in accordance with procedures authorized in Executive Order 11246 of September 24, 1965, and such other sanctions may be imposed and remedies invoked as provided in Executive Order 11246 of September 24, 1965, or by rule, regulation, or order of the Secretary of Labor, or as otherwise provided by law.<br>(16) The contractor will include the portion of the sentence immediately preceding paragraph (1) and the provisions of paragraphs (1) through (8) in every subcontract or purchase order unless exempted by rules, regulations, or orders of the Secretary of Labor issued pursuant to section 204 of Executive Order 11246 of September 24, 1965, so that such provisions will be binding upon each subcontractor or vendor. The contractor will take such action with respect to any subcontract or purchase order as the administering agency may direct as a means of enforcing such provisions, including sanctions for noncompliance:<br>Provided, however, that in the event a contractor becomes involved in, or is threatened with, litigation with a subcontractor or vendor as a result of such direction by the administering agency, the contractor may request the United States to enter into such litigation to protect the interests of the United States.<br>The [recipient] further agrees that it will be bound by the above equal opportunity clause with respect to its own employment practices when it participates in federally assisted construction work: Provided, that if the [recipient] so participating is a State or local government, the above equal opportunity clause is not applicable to any agency, instrumentality or subdivision of such government which does not participate in work on or under the contract.<br>The [recipient] agrees that it will assist and cooperate actively with the administering agency and the Secretary of Labor in obtaining the compliance of contractors and subcontractors with the equal opportunity clause and the rules, regulations, and | | |

| THRESHOLD | PROVISION | CITATION | PROVISION APPLIES TO |
|---|---|---|---|
| | relevant orders of the Secretary of Labor, that it will furnish the administering agency and the Secretary of Labor such information as they may require for the supervision of such compliance, and that it will otherwise assist the recipient agency in the discharge of the agency's primary responsibility for securing compliance.<br><br>The recipient further agrees that it will refrain from entering into any contract or contract modification subject to Executive Order 11246 of September 24, 1965, with a contractor debarred from, or who has not demonstrated eligibility for, Government contracts and federally assisted construction contracts pursuant to the Executive Order and will carry out such sanctions and penalties for violation of the equal opportunity clause as may be imposed upon contractors and subcontractors by the administering agency or the Secretary of Labor pursuant to Part II, Subpart D of the Executive Order. In addition, the [recipient] agrees that if it fails or refuses to comply with these undertakings, the administering agency may take any or all of the following actions: cancel, terminate, or suspend in whole or in part this grant (contract, loan, insurance, guarantee); refrain from extending any further assistance to the [recipient] under the program with respect to which the failure or refund occurred until satisfactory assurance of future compliance has been received from such [recipient]; and refer the case to the Department of Justice for appropriate legal proceedings. | | |
| >$10,000,000 for ARPA but State Provision Applies at any amount and/or<br><br>>$2,000 for CDBG/Braided Funds Projects<br><br>See TX Prevailing Wage Laws | Davis-Bacon Act, as amended (40 U.S.C. 3141-3148). When required by Federal program legislation, all prime construction contracts in excess of $10,000,00 awarded by Non-Federal entities must include a provision for compliance with the Davis-Bacon Act (40 U.S.C. 3141-3144, and 3146-3148) as supplemented by Department of Labor regulations (29 CFR Part 5, "Labor Standards Provisions Applicable to Contracts Covering Federally Financed and Assisted Construction"). In accordance with the statute, contractors must be required to pay wages to laborers and mechanics at a rate not less than the prevailing wages specified in a wage determination made by the Secretary of Labor. In addition, contractors must be required to pay wages not less than once a week. The Non-Federal entity must place a copy of the current prevailing wage determination issued by the Department of Labor in each solicitation. The decision to award a contract or subcontract must be conditioned upon the acceptance of the wage determination. The Non-Federal entity must report all suspected or reported violations to the Federal awarding agency.<br><br>The contracts must also include a provision for compliance with the Copeland "Anti-Kickback" Act (40 U.S.C. 3145), as supplemented by Department of Labor regulations (29 CFR Part 3, "Contractors and Subcontractors on Public Building or Public Work Financed in Whole or in Part by Loans or Grants from the United States"). The Act provides that each contractor or subrecipient must be prohibited from inducing, by any means, any person employed in the construction, completion, or repair of public work, to give up any part of the compensation to which he or she is otherwise entitled. The Non-Federal entity must report all suspected or reported violations to the Federal awarding agency. | 2 CFR 200 APPENDIX II (D) | Contractor RFP/IFB<br><br>Subrecipients |
| >$100,000 | Contract Work Hours and Safety Standards Act (40 U.S.C. 3701-3708). Where applicable, all contracts awarded by the Non-Federal entity in excess of $100,000 that involve the employment of mechanics or laborers must include a provision for compliance with 40 U.S.C. 3702 and 3704, as supplemented by Department of Labor regulations (29 CFR Part 5). Under 40 U.S.C. 3702 of the Act, each contractor must be required to compute the wages of every mechanic and laborer on the basis of a standard work week of 40 hours. Work in excess of the standard work week is permissible provided that the worker is compensated at a rate of not less than one and a half times the basic rate of pay for all hours worked in excess of 40 hours in the work week. The requirements of 40 U.S.C. 3704 are applicable to construction work and provide that no laborer or mechanic must be required to work in surroundings or under working conditions which are unsanitary, hazardous, or dangerous. These requirements do not apply to the purchases of supplies or materials or articles ordinarily available on the open market, or contracts for transportation or | 2 CFR 200 APPENDIX II (E) | Contractor RFP/IFB<br><br>Subrecipients |

| THRESHOLD | PROVISION | CITATION | PROVISION APPLIES TO |
|---|---|---|---|
| | transmission of intelligence. | | |
| None | Rights to Inventions Made Under a Contract or Agreement. If the Federal award meets the definition of "funding agreement" under 37 CFR § 401.2 (a) and the recipient or subrecipient wishes to enter into a contract with a small business firm or nonprofit organization regarding the substitution of parties, assignment or performance of experimental, developmental, or research work under that "funding agreement," the recipient or subrecipient must comply with the requirements of 37 CFR Part 401, "Rights to Inventions Made by Nonprofit Organizations and Small Business Firms Under Government Grants, Contracts and Cooperative Agreements," and any implementing regulations issued by the awarding agency. | 2 CFR 200 APPENDIX II (F) | Contractor RFP/IFB<br>Contractor RFQ<br>Subrecipients |
| >$150,000 | Clean Air Act (42 U.S.C. 7401-7671q.) and the Federal Water Pollution Control Act (33 U.S.C. 1251-1387), as amended – Contracts and subgrants of amounts in excess of $150,000 must contain a provision that requires the Non-Federal award to agree to comply with all applicable standards, orders or regulations issued pursuant to the Clean Air Act (42 U.S.C. 7401-7671q) and the Federal Water Pollution Control Act as amended (33 U.S.C. 1251-1387). Violations must be reported to the Federal awarding agency and the Regional Office of the Environmental Protection Agency (EPA). | 2 CFR 200 APPENDIX II (G) | Contractor RFP/IFB<br>Contractor RFQ<br>Subrecipients |
| >$25,000 | Debarment and Suspension (Executive Orders 12549 and 12689) – A contract award (see 2 CFR 180.220) must not be made to parties listed on the governmentwide exclusions in the System for Award Management (SAM), in accordance with the OMB guidelines at 2 CFR 180 that implement Executive Orders 12549 (3 CFR part 1986 Comp., p. 189) and 12689 (3 CFR part 1989 Comp., p. 235), "Debarment and Suspension." SAM Exclusions contains the names of parties debarred, suspended, or otherwise excluded by agencies, as well as parties declared ineligible under statutory or regulatory authority other than Executive Order 12549. | 2 CFR 200 APPENDIX II (H) | Contractor RFP/IFB<br>Contractor RFQ<br>Subrecipients<br>Vendors |
| >$100,000 | Byrd Anti-Lobbying Amendment (31 U.S.C. 1352) – Contractors that apply or bid for an award exceeding $100,000 must file the required certification. Each tier certifies to the tier above that it will not and has not used Federal appropriated funds to pay any person or organization for influencing or attempting to influence an officer or employee of any agency, a member of Congress, officer or employee of Congress, or an employee of a member of Congress in connection with obtaining any Federal contract, grant or any other award covered by 31 U.S.C. 1352. Each tier must also disclose any lobbying with Non-Federal funds that takes place in connection with obtaining any Federal award. Such disclosures are forwarded from tier to tier up to the Non-Federal award. | 2 CFR 200 APPENDIX II (I) and 24 CFR §570.303 | Contractor RFP/IFB<br>Contractor RFQ<br>Subrecipients |

| THRESHOLD | PROVISION | CITATION | PROVISION APPLIES TO |
|---|---|---|---|
| | See 2 CFR §200.323 - Procurement of Recovered Materials.<br><br>Where applicable, in the performance of contract, pursuant to 2 CFR 200.323, the contractor must comply with section 6002 of the Solid Waste Disposal Act, as amended by the Resource Conservation and Recovery Act. The requirements of Section 6002 include procuring only items designated in guidelines of the Environmental Protection Agency (EPA) at 40 CFR part 247 that contain the highest percentage of recovered materials practicable, consistent with maintaining a satisfactory level of competition, where the purchase price of the item exceeds $10,000 or the value of the quantity acquired during the preceding fiscal year exceeded $10,000; procuring solid waste management services in a manner that maximizes energy and resource recovery; and establishing an affirmative procurement program for procurement of recovered materials identified in the EPA guidelines.<br><br>To the extent that the scope of work or specifications in the contract requires the contractor to provide recovered materials the scope of work or specifications are modified to require that as follows.<br><br>ii. In the performance of this contract, the Contractor shall make maximum use of products containing recovered materials that are EPA-designated items unless the product cannot be acquired—<br>1. Competitively within a timeframe providing for compliance with the contract performance schedule;<br>2. Meeting contract performance requirements; or<br>3. At a reasonable price.<br>iv. Information about this requirement, along with the list of EPA-designated items, is available at EPA's Comprehensive Procurement Guidelines web site, https://www.epa.gov/smm/comprehensive-procurement-guideline-cpg-program.<br>v. The Contractor also agrees to comply with all other applicable requirements of Section 6002 of the "Solid Waste Disposal Act." | 2 CFR 200<br>APPENDIX II (J) | Contractor RFP/IFB<br>Contractor RFQ<br>Subrecipients |
| | See 2 CFR §200.216 - Prohibition on certain telecommunications and video surveillance services or equipment<br><br>(a) Recipients and subrecipients are prohibited from obligating or expending loan or grant funds to:<br>(1) Procure or obtain;<br>(2) Extend or renew a contract to procure or obtain; or<br>(3) Enter into a contract (or extend or renew a contract) to procure or obtain equipment, services, or systems that uses covered telecommunications equipment or services as a substantial or essential component of any system, or as critical technology as part of any system. As described in Public Law 115-232, section 889, covered telecommunications equipment is telecommunications equipment produced by Huawei Technologies Company or ZTE Corporation (or any subsidiary or affiliate of such entities).<br>(i) For the purpose of public safety, security of government facilities, physical security surveillance of critical infrastructure, and other national security purposes, video surveillance and telecommunications equipment produced by Hytera Communications Corporation, Hangzhou Hikvision Digital Technology Company, or Dahua Technology Company (or any subsidiary or affiliate of such entities).<br>(ii) Telecommunications or video surveillance services provided by such entities or using such equipment.<br>(iii) Telecommunications or video surveillance equipment or services produced or provided by an entity that the Secretary of Defense, in consultation with the Director of the National Intelligence or the Director of the Federal Bureau of Investigation, reasonably believes to be an entity owned or | 2 CFR 200<br>APPENDIX II (K) | Contractor RFP/IFB<br>Contractor RFQ<br>Subrecipients |

| THRESHOLD | PROVISION | CITATION | PROVISION APPLIES TO |
|---|---|---|---|
| | controlled by, or otherwise connected to, the government of a covered foreign country.<br>(b) In implementing the prohibition under Public Law 115-232, section 889, subsection (f), paragraph (1), heads of executive agencies administering loan, grant, or subsidy programs shall prioritize available funding and technical support to assist affected businesses, institutions and organizations as is reasonably necessary for those affected entities to transition from covered communications equipment and services, to procure replacement equipment and services, and to ensure that communications service to users and customers is sustained.<br>(c) See Public Law 115-232, section 889 for additional information.<br>(d) See also § 200.471. | | |
| | See 2 CFR §200.322 - Domestic Preferences for Procurements.<br><br>(a) As appropriate and to the extent consistent with law, the Non-Federal entity should, to the greatest extent practicable under a Federal award, provide a preference for the purchase, acquisition, or use of goods, products, or materials produced in the United States (including but not limited to iron, aluminum, steel, cement, and other manufactured products). The requirements of this section must be included in all subawards including all contracts and purchase orders for work or products under this award.<br><br>(b) For purposes of this section:<br>(1) "Produced in the United States" means, for iron and steel products, that all manufacturing processes, from the initial melting stage through the application of coatings, occurred in the United States.<br>(2) "Manufactured products" means items and construction materials composed in whole or in part of non-ferrous metals such as aluminum; plastics and polymer-based products such as polyvinyl chloride pipe; aggregates such as concrete; glass, including optical fiber; and lumber. | 2 CFR 200 APPENDIX II (L) | Contractor RFP/IFB<br>Contractor RFQ<br>Subrecipients |
| | **Additional 2 CFR 200 references & Other Regulations** | | |
| None | The Federal awarding agency must establish conflict of interest policies for Federal awards. The Non-Federal entity must disclose in writing any potential conflict of interest to the Federal awarding agency or pass-through entity in accordance with applicable Federal awarding agency policy. | 2 CFR 200.112 | Contractor RFP/IFB<br>Contractor RFQ<br>Subrecipients |
| None | Contracting with HUB, small and minority businesses, women's business enterprises, and labor surplus area firms.<br>(a) The Non-Federal entity must take all necessary affirmative steps to assure that minority businesses, women's business enterprises, and labor surplus area firms are used when possible.<br>(b) Affirmative steps must include:<br>(1) Placing qualified small and minority businesses and women's business enterprises on solicitation lists;<br>(2) Assuring that small and minority businesses, and women's business enterprises are solicited whenever they are potential sources;<br>(3) Dividing total requirements, when economically feasible, into smaller tasks or quantities to permit maximum participation by small and minority businesses, and women's business enterprises;<br>(4) Establishing delivery schedules, where the requirement permits, which | 2 CFR 200.321 | Contractor RFP/IFB<br>Contractor RFQ<br>Subrecipients |

| THRESHOLD | PROVISION | CITATION | PROVISION APPLIES TO |
|---|---|---|---|
| | encourage participation by small and minority businesses, and women's business enterprises;<br>(5) Using the services and assistance, as appropriate, of such organizations as the Small Business Administration and the Minority Business Development Agency of the Department of Commerce; and<br>(6) Requiring the prime contractor, if subcontracts are to be let, to take the affirmative steps listed in paragraphs (b)(1) through (5) of this section. | | |
| >$10,000 | An NFE (Non-Federal Entity) that is a state agency or an agency of a political subdivision of a state, and the NFE's contractors must comply with Section 6002 of the Solid Waste Disposal Act.<br>Applicable NFEs must include a contract provision requiring compliance with this requirement.<br>This includes contracts awarded by a state agency or political subdivision of a state and its contractors for certain items, as designated by the EPA, with a purchase price greater than $10,000.<br>Indian Tribal Governments and nonprofit organizations are not required to comply with this provision. Additional requirements are listed below. | 2 CFR 200.323 | Contractor RFP/IFB<br>Contractor RFQ<br>Subrecipients |
| None | Financial records, supporting documents, statistical records, and all other Non-Federal entity records pertinent to a Federal award must be retained for a period of three years from the date of submission of the final expenditure report or, for Federal awards that are renewed quarterly or annually, from the date of the submission of the quarterly or annual financial report, respectively, as reported to the Federal awarding agency or pass-through entity in the case of a subrecipient. Federal awarding agencies and pass-through entities must not impose any other record retention requirements upon Non-Federal entities. **All records related to ARPA shall be maintained for 5 years per the ARPA terms, conditions, and regulations.** The only exceptions are the following:<br>(a) If any litigation, claim, or audit is started before the expiration of the 3-year period, the records must be retained until all litigation, claims, or audit findings involving the records have been resolved and final action taken. **All records related to ARPA shall be maintained for 5 years per the ARPA terms, conditions, and regulations.**<br>(b) When the Non-Federal entity is notified in writing by the Federal awarding agency, cognizant agency for audit, oversight agency for audit, cognizant agency for indirect costs, or pass-through entity to extend the retention period.<br>(c) Records for real property and equipment acquired with Federal funds must be retained for 3 years after final disposition. All records related to ARPA shall be maintained for 5 years per the ARPA terms and conditions and regulations.<br>(d) When records are transferred to or maintained by the Federal awarding agency or pass-through entity, the 3-year retention requirement is not applicable to the Non-Federal entity All records related to ARPA shall be maintained for 5 years per the ARPA terms and conditions and regulations. **All records related to ARPA shall be maintained for 5 years per the ARPA terms, conditions, and regulations.**<br>(e) Records for program income transactions after the period of performance. In some cases, recipients must report program income after the period of performance. Where there is such a requirement, the retention period for the records pertaining to the earning of the program income starts from the end of the Non-Federal entity's fiscal year in which the program income is earned.<br>(f) Indirect cost rate proposals and cost allocations plans. This paragraph applies to the following types of documents and their supporting records: Indirect cost rate computations or proposals, cost allocation plans, and any similar accounting computations of the rate at which a particular group of costs is chargeable (such as computer usage chargeback rates or composite fringe benefit rates).<br>(1) *If submitted for negotiation.* If the proposal, plan, or other computation is | 2 CFR 200.334 | Contractor RFP/IFB<br>Contractor RFQ<br>Subrecipients<br>Vendors |

| THRESHOLD | PROVISION | CITATION | PROVISION APPLIES TO |
|---|---|---|---|
| | required to be submitted to the Federal Government (or to the pass-through entity) to form the basis for negotiation of the rate, then the 3-year retention period for its supporting records starts from the date of such submission. **All records related to ARPA shall be maintained for 5 years per the ARPA terms, conditions, and regulations.**<br>(2) *If not submitted for negotiation.* If the proposal, plan, or other computation is not required to be submitted to the Federal Government (or to the pass-through entity) for negotiation purposes, then the 3-year retention period for the proposal, plan, or computation and its supporting records starts from the end of the fiscal year (or other accounting period) covered by the proposal, plan, or other computation. **All records related to ARPA shall be maintained for 5 years per the ARPA terms, conditions, and regulations.** | | |
| None | The Federal awarding agency and the Non-Federal entity should, whenever practicable, collect, transmit, and store Federal award-related information in open and machine-readable formats rather than in closed formats or on paper in accordance with applicable legislative requirements. A machine-readable format is a format in a standard computer language (not English text) that can be read automatically by a web browser or computer system. The Federal awarding agency or pass-through entity must always provide or accept paper versions of Federal award-related information to and from the Non-Federal entity upon request. If paper copies are submitted, the Federal awarding agency or pass-through entity must not require more than an original and two copies. When original records are electronic and cannot be altered, there is no need to create and retain paper copies. When original records are paper, electronic versions may be substituted through the use of duplication or other forms of electronic media provided that they are subject to periodic quality control reviews, provide reasonable safeguards against alteration, and remain readable. | 2 CFR 200.336 | Contractor RFP/IFB<br>Contractor RFQ<br>Subrecipients |
| None | CONTRACTS WITH COMPANIES ENGAGED IN BUSINESS WITH IRAN, SUDAN, OR FOREIGN TERRORIST ORGANIZATION PROHIBITED. A governmental entity may not enter into a governmental contract with a company that is identified on a list prepared and maintained under Section 806.051, 807.051, or 2252.153. The term "foreign terrorist organization" in this paragraph has the meaning assigned to such a term in Section 2252.151(2) of the Texas Government Code. | Texas Government Code 2252.152 | Contractor RFP/IFB<br>Contractor RFQ<br>Subrecipients |
| >$100,000 | PROVISION REQUIRED IN CONTRACT.<br>(a) This section applies only to a contract that:<br>(1) is between a governmental entity and a company with 10 or more full-time employees; and<br>(2) has a value of $100,000 or more that is to be paid wholly or partly from public funds of the governmental entity.<br>(b) A governmental entity may not enter into a contract with a company for goods or services unless the contract contains a written verification from the company that it:<br>(1) does not boycott Israel; and<br>(2) will not boycott Israel during the term of the contract. | Texas Government Code 2271 | Contractor RFP/IFB<br>Contractor RFQ<br>Subrecipients<br>Vendors |
| For Critical Infrastructure Projects | PROHIBITION ON CONTRACTS WITH CERTAIN FOREIGN-OWNED COMPANIES IN CONNECTION WITH CRITICAL INFRASTRUCTURE.<br>PROHIBITED CONTRACTS.<br>(a) A governmental entity may not enter into a contract or other agreement relating to critical infrastructure in this state with a company:<br>(1) if, under the contract or other agreement, the company would be granted direct or remote access to or control of critical infrastructure in this state, excluding access specifically allowed by the governmental entity for product | Texas Government Code, Title 10, Subtitle F, Chapter 2274.0102 | Subrecipients<br>EC 6.1 Awardees |

| THRESHOLD | PROVISION | CITATION | PROVISION APPLIES TO |
|---|---|---|---|
| | warranty and support purposes; and<br>(2) if the governmental entity knows that the company is:<br>(A) owned by or the majority of stock or other ownership interest of the company is held or controlled by:<br>(i) individuals who are citizens of China, Iran, North Korea, Russia, or a designated country; or<br>(ii) a company or other entity, including a governmental entity, that is owned or controlled by citizens of or is directly controlled by the government of China, Iran, North Korea, Russia, or a designated country; or<br>(B) headquartered in China, Iran, North Korea, Russia, or a designated country.<br>(b) The prohibition described by Subsection (a) applies regardless of whether:<br>(1) the company's or its parent company's securities are publicly traded; or<br>(2) the company or its parent company is listed on a public stock exchange as:<br>(A) a Chinese, Iranian, North Korean, or Russian company; or<br>(B) a company of a designated country. | | |
| None | Mandatory standards and policies relating to energy efficiency which are contained in the state energy conservation plan issued in compliance with the Energy Policy and Conservation Act. | 42 U.S.C. 6201 | Contractor RFP/IFB<br>Subrecipients |
| None | The Firm agrees that no otherwise qualified individual with disabilities shall, solely by reason of his/her disability, be denied the benefits of, or be subjected to discrimination, including discrimination in employment, under any program or activity receiving federal financial assistance. | Section 504 of the Rehabilitation Act of 1973, as amended. | Subrecipients |
| | ARPA Terms & Conditions | | |
| ARPA Terms, Conditions, & Records | 1. Use of Funds.<br>a. Recipient understands and agrees that the funds disbursed under this award may only be used in compliance with section 603(c) of the Social Security Act (the Act), Treasury's regulations implementing that section, and guidance issued by Treasury regarding the foregoing.<br>b. Recipient will determine prior to engaging in any project using this assistance that it has the institutional, managerial, and financial capability to ensure proper planning, management, and completion of such project. | Section 9901 of the American Rescue Plan Act, Pub. L. No. 117-2;<br>Section 602(b), 603(b) and/or 603(c) as applicable | Subrecipients |
| ARPA Terms, Conditions, & Records | 2. Period of Performance. The period of performance for this award begins on the date hereof and ends on December 31, 2026. As set forth in Treasury's implementing regulations, Recipients may use award funds to cover eligible costs incurred during the period that begins on March 3, 2021, and ends on December 31, 2024. | Section 9901 of the American Rescue Plan Act, Pub. L. No. 117-2;<br>Section 602(b), 603(b) and/or 603(c) as applicable | Subrecipients |
| ARPA Terms, Conditions, & Records | 3. Reporting. Recipient agrees to comply with any reporting obligations established by Treasury as they relate to this award. | Section 9901 of the American Rescue Plan Act, Pub. L. No. 117-2;<br>Section 602(b), 603(b) and/or 603(c) as applicable | Subrecipients |

| THRESHOLD | PROVISION | CITATION | PROVISION APPLIES TO |
|---|---|---|---|
| ARPA Terms, Conditions, & Records | 4. Maintenance of and Access to Records<br>a. Recipient shall maintain records and financial documents sufficient to evidence compliance with section 603(c) of the Act, Treasury's regulations implementing that section, and guidance issued by Treasury regarding the foregoing.<br>b. The Treasury Office of Inspector General and the Government Accountability Office, or their authorized representatives, shall have the right of access to records (electronic and otherwise) of Recipient in order to conduct audits or other investigations.<br>c. Records shall be maintained by Recipient for a period of five (5) years after all funds have been expended or returned to Treasury, whichever is later. | Section 9901 of the American Rescue Plan Act, Pub. L. No. 117-2;<br>Section 602(b), 603(b) and/or 603(c) as applicable | Contractor RFP/IFB<br>Contractor RFQ<br>Subrecipients<br>Vendors |
| ARPA Terms, Conditions, & Records | 5. Pre-award Costs. Pre-award costs, as defined in 2 CFR § 200.458, may not be paid with funding from this award. | Section 9901 of the American Rescue Plan Act, Pub. L. No. 117-2;<br>Section 602(b), 603(b) and/or 603(c) as applicable | Subrecipients |
| ARPA Terms, Conditions, & Records | 6. Administrative Costs. Recipient may use funds provided under this award to cover both direct and indirect costs. | Section 9901 of the American Rescue Plan Act, Pub. L. No. 117-2;<br>Section 602(b), 603(b) and/or 603(c) as applicable | Subrecipients |
| ARPA Terms, Conditions, & Records | 7. Cost Sharing. Cost sharing or matching funds are not required to be provided by Recipient. | Section 9901 of the American Rescue Plan Act, Pub. L. No. 117-2;<br>Section 602(b), 603(b) and/or 603(c) as applicable | Subrecipients |
| ARPA Terms, Conditions, & Records | 8. Conflicts of Interest. Recipient understands and agrees it must maintain a conflict of interest policy consistent with 2 CFR § 200.318(c) and that such conflict of interest policy is applicable to each activity funded under this award. Recipient and subrecipients must disclose in writing to Treasury or the pass-through entity, as appropriate, any potential conflict of interest affecting the awarded funds in accordance with 2 CFR § 200.112. | Section 9901 of the American Rescue Plan Act, Pub. L. No. 117-2;<br>Section 602(b), 603(b) and/or 603(c) as applicable | Contractor RFP/IFB<br>Contractor RFQ<br>Subrecipients<br>Vendors |
| ARPA Terms, Conditions, & Records | 9. Compliance with Applicable Law and Regulations.<br>a. Recipient agrees to comply with the requirements of section 603 of the Act, regulations adopted by Treasury pursuant to section 603(f) of the Act, and guidance issued by Treasury regarding the foregoing. Recipient also agrees to comply with all other applicable federal statutes, regulations, and executive orders, and Recipient shall provide for such compliance by other parties in any agreements it enters into with other parties relating to this award.<br>b. Federal regulations applicable to this award include, without limitation, the following:<br>i. Uniform Administrative Requirements, Cost Principles, and Audit Requirements for Federal Awards, 2 CFR Part 200, other than such provisions as Treasury may determine are inapplicable to this Award and subject to such exceptions as may be otherwise provided by Treasury. Subpart F – Audit Requirements of the Uniform Guidance, implementing the Single Audit Act, shall apply to this award.<br>ii. Universal Identifier and System for Award Management (SAM), 2 CFR Part 25, pursuant to which the award term set forth in Appendix A to 2 CFR Part 25 is hereby incorporated by reference. | Section 9901 of the American Rescue Plan Act, Pub. L. No. 117-2;<br>Section 602(b), 603(b) and/or 603(c) as applicable | Contractor RFP/IFB<br>Contractor RFQ<br>Subrecipients<br>Vendors |

| THRESHOLD | PROVISION | CITATION | PROVISION APPLIES TO |
|---|---|---|---|
| | iii. Reporting Subaward and Executive Compensation Information, 2 CFR Part 170, pursuant to which the award term set forth in Appendix A to 2 CFR Part 170 is hereby incorporated by reference.<br>iv. OMB Guidelines to Agencies on Governmentwide Debarment and Suspension (Non-procurement), 2 CFR Part 180, including the requirement to include a term or condition in all lower tier covered transactions (contracts and subcontracts described in 2 CFR Part 180, subpart B) that the award is subject to 2 CFR Part 180 and Treasury's implementing regulation at 31 CFR Part 19.<br>v. Recipient Integrity and Performance Matters, pursuant to which the award term set forth in 2 CFR Part 200, Appendix XII to Part 200 is hereby incorporated by reference.<br>vi. Governmentwide Requirements for Drug-Free Workplace, 31 CFR Part 20. (Subrecipient Only)<br>vii. New Restrictions on Lobbying, 31 CFR Part 21.<br>viii. Uniform Relocation Assistance and Real Property Acquisitions Act of 1970 (42 U.S.C. §§ 4601-4655) and implementing regulations.<br>ix. Generally applicable federal environmental laws and regulations.<br><br>c. Statutes and regulations prohibiting discrimination applicable to this award include, without limitation, the following:<br>i. Title VI of the Civil Rights Act of 1964 (42 U.S.C. §§ 2000d et seq.) and Treasury's implementing regulations at 31 CFR Part 22, which prohibit discrimination on the basis of race, color, or national origin under programs or activities receiving federal financial assistance;<br>ii. The Fair Housing Act, Title VIII of the Civil Rights Act of 1968 (42 U.S.C. §§ 3601 et seq.), which prohibits discrimination in housing on the basis of race, color, religion, national origin, sex, familial status, or disability;<br>iii. Section 504 of the Rehabilitation Act of 1973, as amended (29 U.S.C. § 794), which prohibits discrimination on the basis of disability under any program or activity receiving federal financial assistance;<br>iv. The Age Discrimination Act of 1975, as amended (42 U.S.C. §§ 6101 et seq.), and Treasury's implementing regulations at 31 CFR Part 23, which prohibit discrimination on the basis of age in programs or activities receiving federal financial assistance; and<br>v. Title II of the Americans with Disabilities Act of 1990, as amended (42 U.S.C. §§ 12101 et seq.), which prohibits discrimination on the basis of disability under programs, activities, and services provided or made available by state and local governments or instrumentalities or agencies thereto. | | |
| ARPA Terms, Conditions, & Records | 10. Remedial Actions. In the event of Recipient's noncompliance with section 603 of the Act, other applicable laws, Treasury's implementing regulations, guidance, or any reporting or other program requirements, Treasury may impose additional conditions on the receipt of a subsequent tranche of future award funds, if any, or take other available remedies as set forth in 2 CFR § 200.339. In the case of a violation of section 603(c) of the Act regarding the use of funds, previous payments shall be subject to recoupment as provided in section 603(e) of the Act. | Section 9901 of the American Rescue Plan Act, Pub. L. No. 117-2;<br>Section 602(b), 603(b) and/or 603(c) as applicable | Subrecipients |
| ARPA Terms, Conditions, & Records | 11. Hatch Act. Recipient agrees to comply, as applicable, with requirements of the Hatch Act (5 U.S.C. §§ 1501-1508 and 7324-7328), which limit certain political activities of State or local government employees whose principal employment is in connection with an activity financed in whole or in part by this federal assistance. | Section 9901 of the American Rescue Plan Act, Pub. L. No. 117-2;<br>Section 602(b), 603(b) and/or 603(c) as applicable | Subrecipients |
| ARPA Terms, Conditions, & Records | 12. False Statements. Recipient understands that making false statements or claims in connection with this award is a violation of federal law and may result in criminal, civil, or administrative sanctions, including fines, imprisonment, civil damages and penalties, debarment from participating in federal awards or contracts, and/or any | Section 9901 of the American Rescue Plan Act, Pub. L. No. 117-2;<br>Section 602(b), | Contractor RFP/IFB<br>Contractor RFQ<br>Subrecipients<br>Vendors |

| THRESHOLD | PROVISION | CITATION | PROVISION APPLIES TO |
|---|---|---|---|
| | other remedy available by law. | 603(b) and/or 603(c) as applicable | |
| ARPA Terms, Conditions, & Records | 13. Publications. Any publications produced with funds from this award must display the following language: "This project [is being] [was] supported, in whole or in part, by federal award number [enter project FAIN] awarded to [name of Recipient] by the U.S. Department of the Treasury." | Section 9901 of the American Rescue Plan Act, Pub. L. No. 117-2; Section 602(b), 603(b) and/or 603(c) as applicable | Subrecipients |
| ARPA Terms, Conditions, & Records | 14. Debts Owed the Federal Government.<br>a. Any funds paid to Recipient (1) in excess of the amount to which Recipient is finally determined to be authorized to retain under the terms of this award; (2) that are determined by the Treasury Office of Inspector General to have been misused; or (3) that are determined by Treasury to be subject to a repayment obligation pursuant to section 603(e) of the Act and have not been repaid by Recipient shall constitute a debt to the federal government.<br>b. Any debts determined to be owed the federal government must be paid promptly by Recipient. A debt is delinquent if it has not been paid by the date specified in Treasury's initial written demand for payment, unless other satisfactory arrangements have been made or if the Recipient knowingly or improperly retains funds that are a debt as defined in paragraph 14(a). Treasury will take any actions available to it to collect such a debt. | Section 9901 of the American Rescue Plan Act, Pub. L. No. 117-2; Section 602(b), 603(b) and/or 603(c) as applicable | Subrecipients |
| ARPA Terms, Conditions, & Records | 15. Disclaimer.<br>a. The United States expressly disclaims any and all responsibility or liability to Recipient or third persons for the actions of Recipient or third persons resulting in death, bodily injury, property damages, or any other losses resulting in any way from the performance of this award or any other losses resulting in any way from the performance of this award or any contract, or subcontract under this award.<br>b. The acceptance of this award by Recipient does not in any way establish an agency relationship between the United States and Recipient. | Section 9901 of the American Rescue Plan Act, Pub. L. No. 117-2; Section 602(b), 603(b) and/or 603(c) as applicable | Subrecipients |
| ARPA Terms, Conditions, & Records | 16. Protections for Whistleblowers.<br>c. In accordance with 41 U.S.C. § 4712, Recipient may not discharge, demote, or otherwise discriminate against an employee in reprisal for disclosing to any of the list of persons or entities provided below, information that the employee reasonably believes is evidence of gross mismanagement of a federal contract or grant, a gross waste of federal funds, an abuse of authority relating to a federal contract or grant, a substantial and specific danger to public health or safety, or a violation of law, rule, or regulation related to a federal contract (including the competition for or negotiation of a contract) or grant.<br>d. The list of persons and entities referenced in the paragraph above includes the following:<br>i. A member of Congress or a representative of a committee of Congress;<br>ii. An Inspector General;<br>iii. The Government Accountability Office;<br>iv. A Treasury employee responsible for contract or grant oversight or management;<br>v. An authorized official of the Department of Justice or other law enforcement agency;<br>vi. A court or grand jury; or<br>vii. A management official or other employee of Recipient, contractor, or subcontractor who has the responsibility to investigate, discover, or address misconduct.<br>e. Recipient shall inform its employees in writing of the rights and remedies provided | Section 9901 of the American Rescue Plan Act, Pub. L. No. 117-2; Section 602(b), 603(b) and/or 603(c) as applicable | Contractor RFP/IFB<br>Contractor RFQ<br>Subrecipients<br>Vendors |

| THRESHOLD | PROVISION | CITATION | PROVISION APPLIES TO |
|---|---|---|---|
| | under this section, in the predominant native language of the workforce. | | |
| ARPA Terms, Conditions, & Records | 17. Increasing Seat Belt Use in the United States. Pursuant to Executive Order 13043, 62 FR 19217 (Apr. 18, 1997), Recipient should encourage its contractors to adopt and enforce on-the-job seat belt policies and programs for their employees when operating company-owned, rented or personally owned vehicles. | Section 9901 of the American Rescue Plan Act, Pub. L. No. 117-2; Section 602(b), 603(b) and/or 603(c) as applicable | Contractor RFP/IFB<br>Contractor RFQ<br>Subrecipients<br>Vendors |
| ARPA Terms, Conditions, & Records | 18. Reducing Text Messaging While Driving. Pursuant to Executive Order 13513, 74 FR 51225 (Oct. 6, 2009), Recipient should encourage its employees, subrecipients, and contractors to adopt and enforce policies that ban text messaging while driving, and Recipient should establish workplace safety policies to decrease accidents caused by distracted drivers | Section 9901 of the American Rescue Plan Act, Pub. L. No. 117-2; Section 602(b), 603(b) and/or 603(c) as applicable | Contractor RFP/IFB<br>Contractor RFQ<br>Subrecipients<br>Vendors |

## Exhibit C – Other Related Information

To be inserted

## Exhibit D – Insurance Certificate

To be inserted

FURNISHED ON RECEIPT OF ORDER

## Exhibit E – Bid, Performance, and Payment Bonds

To be inserted

NOT REQUIRED

## Exhibit F – Eligibility Verification (SAM.gov)

Vendor to provide a dated printout of their active status without exclusions from SAM.gov website

SEE ATTACHED.

An official website of the United States government Here's how you know

**Important Reps and Certs Update** Show Details
*Jul 18, 2024*

**Entity Validation Processing** Show Details
*Jul 16, 2024*

See All Alerts

SAM.GOV®

Home Search Data Bank Data Services Help

## Entity Workspace

Get Started

Show Workspace For
Non-Federal Entities

Non-Federal Entities

BioPreferred Reporting

Service Contract Reporting

Filter By

Keyword

Entity

Status

Expiration Date

FSD Number

Address Update

Reset

*Results per page*

*Sort by*

of 1

R.B. EVERETT & COMPANY Active Registration

Unique Entity ID:
WYKUXS3MAUK7

CAGE/NCAGE:
3K387

Doing Business As:
(blank)

Physical Address:
8211 RED BLUFF RD
PASADENA, TX 77507-1039 USA

Purpose of Registration:
All Awards

*Expiration Date*
Jun 25, 2025

Feedback

## Our Website

About This Site
Our Community
Release Notes
System Alerts

## Policies

Terms of Use
Privacy Policy
Restricted Data Use
Freedom of Information Act
Accessibility

## Our Partners

Acquisition.gov
USASpending.gov
Grants.gov
More Partners

## Customer Service

Help
Check Entity Status
Federal Service Desk
External Resources
Contact

## Exhibit G – Certificate of Interested Parties (Form 1295)

Form 1295 (Certificate of Interested Parties) must be completed on the Texas Ethics Commission's website as part of this project prior to contract execution. Form 1295 can be accessed here: https://www.ethics.state.tx.us/filinginfo/1295/ and must be returned with the certification number assigned after completion

FURNISHED ON RECEIPT OF ORDER

# CITY COUNCIL AGENDA FORM

Meeting Date: March 10, 2025
Prepared by: Shannon Breaux
Department: Public Works

Agenda Item: 9.V.
Reviewed by:

**AGENDA ITEM DESCRIPTION:**

Awarding a contract for the Wisteria Drainage Improvements Project to Mar-Con Services, LLC for the amount of $535,088.50 - *Public Works*

**STAFF BRIEFING:**

The Wisteria Drainage Improvements project aims to enhance stormwater management and mitigate flooding along Wisteria Street. The project includes the installation of reinforced concrete pipes, storm inlets, junction boxes, pavement restoration, and associated improvements.

**Bid Process & Contractor Selection:**

Bids were publicly opened on February 6, 2025.
Two responsive bids were received:

- **Mar-Con Services, LLC:** $535,088.50 (Recommended Lowest Responsible Bidder)
- **ISJ Underground Utilities:** $594,046.40

After a thorough review of bid documents, references, and financials, Mar-Con Services, LLC is recommended for contract award.

**Project Design & Contract Documents:**

- The project was designed by LJA Engineering, Inc**.**, which also provided bid phase and construction management services.
- Construction contract documents outline technical specifications, compliance with CDBG grant requirements, labor standards, and performance criteria.

**Construction Timeline:**

- The contract duration is **120 calendar days** from the Notice to Proceed (NTP).

## HISTORY:

### Project Initiation & Engineering Design

- The City of La Marque identified drainage deficiencies along Wisteria Street, necessitating stormwater improvements.
- LJA Engineering, Inc. was contracted to design the project and manage the bidding and construction phases under Project No. E019-1014.
- Engineering design was completed in September 2024, with construction plans and contract documents finalized by December 2024.

### Bidding & Contractor Selection

- The project was publicly advertised for bids, and a mandatory pre-bid meeting was held on January 30, 2025.
- Bids were opened on February 6, 2025, at City Council Chambers.

**Two responsive bids** were received:

- **Mar-Con Services, LLC (Pasadena, TX)** – **$535,088.50.** (Lowest Responsible Bidder)
- **ISJ Underground Utilities (Arcola, TX)** – **$594,046.40.**
- Two additional bidders were disqualified due to incorrect bid form submissions.
- After reviewing bidder qualifications, references, and prior work experience, LJA. Engineering recommended awarding the contract to Mar-Con Services, LLC.

### Next Steps

- City Council approval of the contract award to **Mar-Con Services, LLC**.
- Issuance of **Notice to Proceed** and start of construction.
- Ongoing construction management by **LJA Engineering**.

## FISCAL IMPACT:

**Fiscal Impact:**

| | Amount ($) |
|---|---|
| Grant Amount | 500,000.00 |
| City Match | 75,000.00 |
| Engineering Fees – Design | 49,000.00 |
| Engineering Fees – Bidding | 8,000.00 |

| | Amount ($) |
|---|---|
| Engineering Fees – Construction | 18,000.00 |
| Administration Fee | 35,400.00 |
| Construction Budget | 464,600.00 |
| Mar-Con Bid | 535,088.50 |
| Amount Remaining After Grant | 70,488.50 |
| **Final City Total for Project** | **145,488.50** |

The total financial commitment from the City is **$145,488.50**, which includes the **$75,000 City match** and the **$70,488.50 remaining after the grant funds are applied**.

The City must decide how to proceed with the project in light of the bid exceeding the available budget. Below are the options for consideration:

**Option 1: Proceed with Full Project**

- **Total Cost to City:** $145,488.50
- The City covers the additional $70,488.50 beyond the grant funds to complete the full scope of work.

**Option 2: Reduce Scope of Work**

- **Cost TBD based on revised scope.**
- The project is adjusted to fit within the available budget, requiring modifications to the scope and potential re-bidding.
- May delay the project and incur additional engineering costs.

**Option 3: Cancel Project**

- **Total Cost to City:** $57,000
- The City pays for the completed design ($49,000) and bidding fees ($8,000) without proceeding with construction.
- No further costs, but no infrastructure improvements.

# CITY OF LA MARQUE
# CONSTRUCTION PLANS FOR:

**KEITH BELL**
MAYOR

**JOE CAMPIAN**
MAYOR PRO-TEM

**KIMBERLY YANCY**
COUNCILMAN, DISTRICT A

**JOE CAMPIAN**
COUNCILMAN, DISTRICT B

**MICHAEL CARLSON**
COUNCILMAN, DISTRICT C

**JAMES ROSS**
COUNCILMAN, DISTRICT D

**CESAR GARCIA**
CITY MANAGER

DRAWING INDEX


1. COVER SHEET
2. GENERAL NOTES – LOCATION & VICINITY MAPS
3. PROJECT LAYOUT – HORIZONTAL & VERTICAL CONTROL
4. WISTERIA DRIVE – PLAN & PROFILE – BEGINNING TO BL "A" STA. 5+00
5. WISTERIA DRIVE – PLAN & PROFILE – BL "A" STA. 5+00 TO END
6. PAVEMENT DETAILS
7. STORM SEWER DETAILS – SHEET 1 OF 2
8. STORM SEWER DETAILS – SHEET 2 OF 2
9. WATER DETAILS
10. STORM WATER POLLUTION PREVENTION – PLAN & DETAILS
11. TRAFFIC CONTROL PLAN – ROLLING CONSTRUCTION
12. STANDARD BARRICADE DETAILS


CITY OF LA MARQUE, TEXAS

THIS IS TO CERTIFY THAT THESE PLANS HAVE BEEN FOUND TO BE IN GENERAL COMPLIANCE WITH THE CURRENT REQUIREMENT ESTABLISHED BY THE CITY OF LA MARQUE.

DINH V. HO, P.E., CITY ENGINEER — DATE

NOTE: CITY APPROVAL VALID FOR ONE YEAR AFTER DATE OF SIGNATURES

# WISTERIA DRAINAGE IMPROVEMENTS

## LJA PROJECT NO. E019-1014
## SEPTEMBER, 2024

THESE DOCUMENTS ARE FOR INTERIM REVIEW AND ARE NOT INTENDED FOR CONSTRUCTION, BIDDING, OR PERMIT PURPOSES.

MARK E. HAVRAN
TEXAS P.E. NO. 118610
DATE: SEPTEMBER, 2024


**LJA Engineering, Inc.**
11821 East Freeway
Suite 360
Houston, Texas 77029
Phone 713.450.1300
Fax 713.450.1385
FRN - F-1386


11/26/24

H:\ACAD\Clients\E019\1014\Design\E019-1014-01 COVER.dwg (XREF)

## GENERAL NOTES:

1. CONTRACTOR SHALL CONTACT LJA ENGINEERING, INC. MR. LES DODSON AT (281) 627-2633 AT LEAST 48 HOURS PRIOR TO CONSTRUCTION FOR NOTIFICATION OF COMMENCEMENT.
2. CONTACT CITY OF LA MARQUE AT (409) 938-9213, MR. RICK SAILLER, REGARDING CITY OF LA MARQUE WATER, SANITARY SEWER AND STORM SEWER FACILITIES, 48 HOURS PRIORS TO COMMENCEMENT OF CONSTRUCTION.
3. ALL WORK SHALL BE DONE IN ACCORDANCE WITH APPLICABLE LOCAL REQUIREMENTS.
4. REMOVE AND REPLACE CULVERTS AT ROADWAYS OR ENTRY WAYS WHEN ENCOUNTERED BY OPEN CUT CONSTRUCTION. NO COMPENSATION, AS SEPARATE PAY, WILL BE MADE FOR REMOVING AND REPLACING CULVERTS. SHOULD CONTRACTOR DAMAGE CULVERTS, REPLACE WITH LIKE MATERIAL CULVERTS.
5. MAILBOX RELOCATION IS INCIDENTAL TO INSTALLATION OF STORM SEWER. CONTRACTOR MUST NOT INTERFERE WITH MAIL DELIVERY. MAILBOX TO BE RESTORED TO EXISTING OR BETTER CONDITION UPON COMPLETION OF WATERLINE ACTIVITY.
6. SIGN REMOVAL AND RELOCATION IS INCIDENTAL TO INSTALLATION OF STORM SEWER. SIGN TO BE RESTORED TO EXISTING OR BETTER CONDITION UPON COMPLETION OF WATERLINE ACTIVITY.
7. LOCATION OF EXISTING UTILITY SERVICE LINES (WATER, SEWER, GAS, TELEPHONE, ELECTRICAL, CABLE TELEVISION, ETC.) ARE APPROXIMATE LOCATIONS AND WERE DETERMINED FROM AVAILABLE RECORDS WHICH ARE NOT GUARANTEED. CONTRACTOR TO LOCATE SERVICE LINES AND /OR OTHER OBSTRUCTIONS AHEAD OF EXCAVATION.
8. CONTRACTOR SHALL COVER OPEN EXCAVATION IN TRAFFIC PATH WITH ANCHORED STEEL PLATES DURING NON-WORKING HOURS.
9. CONTRACTOR TO MAKE ARRANGEMENTS WITH THE APPROPRIATE UTILITY COMPANY FOR SECURING POLES, IF NECESSARY, WHILE CONSTRUCTION PASSES BY POLES. COSTS OF SECURING POLES WILL BE PAID FOR BY THE CONTRACTOR.
10. CONSTRUCTION STAKING (ALIGNMENT AND GRADE) TO BE PROVIDED BY THE CONTRACTOR AT NO SEPARATE PAY.
11. CONTRACTOR SHALL PROTECT EXISTING UNDERGROUND FACILITIES DURING INSTALLATION OF PROPOSED WORK.
12. CONTRACTOR TO USE CAUTION WHEN CROSSING ALL EXISTING FACILITIES. ANY DAMAGE TO BE REPAIRED AT THE CONTRACTORS EXPENSE WITH NO SEPARATE PAY.
13. ALL WORK SHALL CONFORM TO THE STANDARDS OF THE LOCAL GOVERNMENTAL ENTITIES. CONTRACTOR IS RESPONSIBLE FOR REPLACEMENT AND /OR REPAIR OF ANY DAMAGE TO CONTROL MARKERS AND IRON RODS. THE CONTRACTOR WILL BE REQUIRED TO REPLACE THE DAMAGED CONTROL MARKERS OR IRON RODS BY OR UNDER THE SUPERVISION OF A REGISTERED PUBLIC SURVEYOR.
14. WHERE CONTRACTOR'S WORK AND /OR EQUIPMENT CAUSES AN OBSTRUCTION TO TRAFFIC, CONTRACTOR SHALL PROVIDE AND INSTALL TRAFFIC CONTROL DEVICES IN ACCORDANCE WITH PART VI OF THE "TEXAS MANUAL ON UNIFORM TRAFFIC DEVICES" (TEXAS M.U.T.C.D., MOST RECENT EDITION, AS REVISED) DURING CONSTRUCTION.
15. CONTRACTOR SHALL MAINTAIN SIGNING AND BARRICADES DURING CONSTRUCTION REPLACEMENT OF DAMAGED SIGNS OR BARRICADES SHALL BE WITHIN 24 HOURS.
16. CONTRACTOR IS RESPONSIBLE FOR MAINTAINING THE STREET PAVEMENT SURFACE DURING THE CONSTRUCTION PERIOD. THE STREET WILL BE KEPT CLEAN TO PREVENT DIRT OR MUD BUILDUP AND SUBSEQUENT RAINFALL PRODUCING SLICK STREETS, CAUSING UNSAFE DRIVING CONDITIONS.
17. PAVED SURFACES SHALL BE PROTECTED FROM DAMAGE FROM TRACKED EQUIPMENT.
18. NO STREET SHALL BE BLOCKED WITHOUT SPECIFIC WRITTEN APPROVAL OF THE APPROPRIATE GOVERNMENTAL ENTITY.
19. NOTIFY ALL PROPERTY OWNERS A MINIMUM OF TWENTY-FOUR (24) HOURS PRIOR TO BLOCKAGE OF DRIVEWAYS OR ENTERING OF UTILITY EASEMENTS.
20. INGRESS AND EGRESS SHALL BE PROVIDED AT DRIVEWAYS IMMEDIATELY AFTER INSTALLATION LINE WORK.
21. CONTRACTOR SHALL MAINTAIN DRAINAGE TO ORIGINAL OR BETTER CONDITION THROUGHOUT THE CONSTRUCTION OF THE PROJECT. NO SEPARATE PAY.
22. BACKFILLING AND CLEANUP SHALL IMMEDIATELY FOLLOW PIPE LAYING OPERATION, CONSTRUCTION SHALL BE SUSPENDED IF CLEANUP IS NOT SATISFACTORY.
23. SURPLUS EXCAVATED MATERIAL SHALL BE REMOVED AND DISPOSED OFF SITE AS DIRECTED BY THE ENGINEER. IF THE ENGINEER NOTIFIES THE CONTRACTOR THAT THE OWNER DOES NOT HAVE USE FOR THIS MATERIAL, THE SURPLUS MATERIAL BECOMES THE PROPERTY OF THE CONTRACTOR AND HIS RESPONSIBILITY TO DISPOSE OF THE MATERIAL.
24. OBTAIN ALL PERMITS, NOT PROVIDED BY OWNER, PRIOR TO STARTING CONSTRUCTION.
25. THE CONTRACTOR WILL BE RESPONSIBLE TO MAINTAIN AN UPDATED REDLINED "AS BUILT" SET OF PLANS ON SITE.
26. WHERE NONMETALLIC PIPE IS INSTALLED, DURABLE WATERLINE TAPE SHALL BE INSTALLED CONCURRENTLY (APPROXIMATELY ONE FOOT ABOVE PIPE) FOR DETECTION PURPOSES.

## SEPARATION DISTANCES:

**§290.44(E)** LOCATION OF WATERLINES. THE FOLLOWING RULES APPLY TO INSTALLATIONS OF WATERLINES, WASTEWATER MAINS OR LATERALS, AND OTHER CONVEYANCES/APPURTENANCES IDENTIFIED AS POTENTIAL SOURCES OF CONTAMINATION. FURTHERMORE, ALL RATINGS SPECIFIED SHALL BE DEFINED BY ASTM OR AWWA STANDARDS UNLESS STATED OTHERWISE. NEW MAINS, SERVICE LINES, OR LATERALS ARE THOSE THAT ARE INSTALLED WHERE NO MAIN, SERVICE LINE, OR LATERAL PREVIOUSLY EXISTED, OR WHERE EXISTING MAINS, SERVICE LINES, OR LATERALS ARE REPLACED WITH PIPES OF DIFFERENT SIZE OR MATERIAL.

**§290.44(E)(1)** WHEN NEW POTABLE WATER DISTRIBUTION LINES ARE CONSTRUCTED, THEY SHALL BE INSTALLED NO CLOSER THAN NINE FEET IN ALL DIRECTIONS TO WASTEWATER COLLECTION FACILITIES. ALL SEPARATION DISTANCES SHALL BE MEASURED FROM THE OUTSIDE SURFACE OF EACH OF THE RESPECTIVE PIECES.

**§290.44(E)(2)** POTABLE WATER DISTRIBUTION LINES AND WASTEWATER MAINS OR LATERALS THAT FORM PARALLEL UTILITY LINES SHALL BE INSTALLED IN SEPARATE TRENCHES.

**§290.44(E)(3)** NO PHYSICAL CONNECTION SHALL BE MADE BETWEEN A DRINKING WATER SUPPLY AND A SEWER LINE. ANY APPURTENANCE SHALL BE DESIGNED AND CONSTRUCTED SO AS TO PREVENT ANY POSSIBILITY OF SEWAGE ENTERING THE DRINKING WATER SYSTEM.

**§290.44(E)(4)** WHERE THE NINE-FOOT SEPARATION DISTANCE CANNOT BE ACHIEVED, THE FOLLOWING CRITERIA SHALL APPLY.

**§290.44(E)(4)(A)** NEW WATERLINE INSTALLATION--PARALLEL LINES.

**§290.44(E)(4)(A)(I)** WHERE A NEW POTABLE WATERLINE PARALLELS AN EXISTING, NON-PRESSURE OR PRESSURE RATED WASTEWATER MAIN OR LATERAL AND THE LICENSED PROFESSIONAL ENGINEER LICENSED IN THE STATE OF TEXAS IS ABLE TO DETERMINE THAT THE EXISTING WASTEWATER MAIN OR LATERAL IS NOT LEAKING, THE NEW POTABLE WATERLINE SHALL BE LOCATED AT LEAST TWO FEET ABOVE THE EXISTING WASTEWATER MAIN OR LATERAL, MEASURED VERTICALLY, AND AT LEAST FOUR FEET AWAY, MEASURED HORIZONTALLY, FROM THE EXISTING WASTEWATER MAIN OR LATERAL. EVERY EFFORT SHALL BE EXERTED NOT TO DISTURB THE BEDDING AND BACKFILL OF THE EXISTING WASTEWATER MAIN OR LATERAL.

**§290.44(E)(4)(A)(II)** WHERE A NEW POTABLE WATERLINE PARALLELS AN EXISTING PRESSURE RATED WASTEWATER MAIN OR LATERAL AND IT CANNOT BE DETERMINED BY THE LICENSED PROFESSIONAL ENGINEER IF THE EXISTING LINE IS LEAKING, THE EXISTING WASTEWATER MAIN OR LATERAL SHALL BE REPLACED WITH AT LEAST 150 PSI PRESSURE RATED PIPE. THE NEW POTABLE WATERLINE SHALL BE LOCATED AT LEAST TWO FEET ABOVE THE NEW WASTEWATER LINE, MEASURED VERTICALLY, AND AT LEAST FOUR FEET AWAY, MEASURED HORIZONTALLY, FROM THE REPLACED WASTEWATER MAIN OR LATERAL.

**§290.44(E)(4)(A)(III)** WHERE A NEW POTABLE WATERLINE PARALLELS A NEW WASTEWATER MAIN, THE WASTEWATER MAIN OR LATERAL SHALL BE CONSTRUCTED OF AT LEAST 150 PSI PRESSURE RATED PIPE. THE NEW POTABLE WATERLINE SHALL BE LOCATED AT LEAST TWO FEET ABOVE THE WASTEWATER MAIN OR LATERAL, MEASURED VERTICALLY, AND AT LEAST FOUR FEET AWAY, MEASURED HORIZONTALLY, FROM THE WASTEWATER MAIN OR LATERAL.

**§290.44(E)(4)(B)** NEW WATERLINE INSTALLATION--CROSSING LINES.

**§290.44(E)(4)(B)(I)** WHERE A NEW POTABLE WATERLINE CROSSES AN EXISTING, NON-PRESSURE RATED WASTEWATER MAIN OR LATERAL, ONE SEGMENT OF THE WATERLINE PIPE SHALL BE CENTERED OVER THE WASTEWATER MAIN OR LATERAL SUCH THAT THE JOINTS OF THE WATERLINE PIPE ARE EQUIDISTANT AND AT LEAST NINE FEET HORIZONTALLY FROM THE CENTERLINE OF THE WASTEWATER MAIN OR LATERAL. THE POTABLE WATERLINE SHALL BE AT LEAST TWO FEET ABOVE THE WASTEWATER MAIN OR LATERAL. WHENEVER POSSIBLE, THE CROSSING SHALL BE CENTERED BETWEEN THE JOINTS OF THE WASTEWATER MAIN OR LATERAL. IF THE EXISTING WASTEWATER MAIN OR LATERAL IS DISTURBED OR SHOWS SIGNS OF LEAKING, IT SHALL BE REPLACED FOR AT LEAST NINE FEET IN BOTH DIRECTIONS (18 FEET TOTAL) WITH AT LEAST 150 PSI PRESSURE RATED PIPE.

**§290.44(E)(4)(B)(II)** WHERE A NEW POTABLE WATERLINE CROSSES AN EXISTING, PRESSURE RATED WASTEWATER MAIN OR LATERAL, ONE SEGMENT OF THE WATERLINE PIPE SHALL BE CENTERED OVER THE WASTEWATER MAIN OR LATERAL SUCH THAT THE JOINTS OF THE WATERLINE PIPE ARE EQUIDISTANT AND AT LEAST NINE FEET HORIZONTALLY FROM THE CENTERLINE OF THE WASTEWATER MAIN OR LATERAL. THE POTABLE WATERLINE SHALL BE AT LEAST SIX INCHES ABOVE THE WASTEWATER MAIN OR LATERAL WHENEVER POSSIBLE, THE CROSSING SHALL BE CENTERED BETWEEN THE JOINTS OF THE WASTEWATER MAIN OR LATERAL. IF THE EXISTING WASTEWATER MAIN OR LATERAL SHOWS SIGNS OF LEAKING, IT SHALL BE REPLACED FOR AT LEAST NINE FEET IN BOTH DIRECTIONS (18 FEET TOTAL) WITH AT LEAST 150 PSI PRESSURE RATED PIPE.

**§290.44(E)(4)(B)(III)** WHERE A NEW POTABLE WATERLINE CROSSES A NEW, NON-PRESSURE RATED WASTEWATER MAIN OR LATERAL AND THE STANDARD PIPE SEGMENT LENGTH OF THE WASTEWATER MAIN OR LATERAL IS AT LEAST 18 FEET, ONE SEGMENT OF THE WATERLINE PIPE SHALL BE CENTERED OVER THE WASTEWATER MAIN OR LATERAL SUCH THAT THE JOINTS OF THE WATERLINE PIPE ARE EQUIDISTANT AND AT LEAST NINE FEET HORIZONTALLY FROM THE CENTERLINE OF THE WASTEWATER MAIN OR LATERAL. THE POTABLE WATERLINE SHALL BE AT LEAST TWO FEET ABOVE THE WASTEWATER MAIN OR LATERAL. WHENEVER POSSIBLE, THE CROSSING SHALL BE CENTERED BETWEEN THE JOINTS OF THE WASTEWATER MAIN OR LATERAL. THE WASTEWATER PIPE SHALL HAVE A MINIMUM PIPE STIFFNESS OF 115 PSI AT 5.0% DEFLECTION. THE WASTEWATER MAIN OR LATERAL SHALL BE EMBEDDED IN CEMENT STABILIZED SAND (SEE CLAUSE (VI) OF THIS SUBPARAGRAPH) FOR THE TOTAL LENGTH OF ONE PIPE SEGMENT PLUS 12 INCHES BEYOND THE JOINT ON EACH END.

**§290.44(E)(4)(B)(IV)** WHERE A NEW POTABLE WATERLINE CROSSES A NEW, NON-PRESSURE RATED WASTEWATER MAIN OR LATERAL AND A STANDARD LENGTH OF THE WASTEWATER PIPE IS LESS THAN 18 FEET IN LENGTH, THE POTABLE WATER PIPE SEGMENT SHALL BE CENTERED OVER THE WASTEWATER LINE. THE MATERIALS AND METHOD OF INSTALLATION SHALL CONFORM WITH ONE OF THE FOLLOWING OPTIONS.

**§290.44(E)(4)(B)(IV)(I)** WITHIN NINE FEET HORIZONTALLY OF EITHER SIDE OF THE WATERLINE, THE WASTEWATER PIPE AND JOINTS SHALL BE CONSTRUCTED WITH PIPE MATERIAL HAVING A MINIMUM PRESSURE RATING OF AT LEAST 150 PSI. AN ABSOLUTE MINIMUM VERTICAL SEPARATION DISTANCE OF TWO FEET SHALL BE PROVIDED. THE WASTEWATER MAIN OR LATERAL SHALL BE LOCATED BELOW THE WATERLINE.

**§290.44(E)(4)(B)(IV)(II)** ALL SECTIONS OF WASTEWATER MAIN OR LATERAL WITHIN NINE FEET HORIZONTALLY OF THE WATERLINE SHALL BE ENCASED IN AN 18-FOOT (OR LONGER) SECTION OF PIPE. FLEXIBLE ENCASING PIPE SHALL HAVE A MINIMUM PIPE STIFFNESS OF 115 PSI AT 5.0% DEFLECTION. THE ENCASING PIPE SHALL BE CENTERED ON THE WATERLINE AND SHALL BE AT LEAST TWO NOMINAL PIPE DIAMETERS LARGER THAN THE WASTEWATER MAIN OR LATERAL. THE SPACE AROUND THE CARRIER PIPE SHALL BE SUPPORTED AT FIVE-FOOT (OR LESS) INTERVALS WITH SPACERS OR BE FILLED TO THE SPRINGLINE WITH WASHED SAND. EACH END OF THE CASING SHALL BE SEALED WITH WATERTIGHT NON-SHRINK CEMENT GROUT OR A MANUFACTURED WATERTIGHT SEAL. AN ABSOLUTE MINIMUM SEPARATION DISTANCE OF SIX INCHES BETWEEN THE ENCASEMENT PIPE AND THE WATERLINE SHALL BE PROVIDED. THE WASTEWATER LINE SHALL BE LOCATED BELOW THE WATERLINE.

**§290.44(E)(4)(B)(IV)(III)** WHEN A NEW WATERLINE CROSSES UNDER A WASTEWATER MAIN OR LATERAL, THE WATERLINE SHALL BE ENCASED AS DESCRIBED FOR WASTEWATER MAINS OR LATERALS IN SUBCLAUSE (II) OF THIS CLAUSE OR CONSTRUCTED OF DUCTILE IRON OR STEEL PIPE WITH MECHANICAL OR WELDED JOINTS AS APPROPRIATE. AN ABSOLUTE MINIMUM SEPARATION DISTANCE OF ONE FOOT BETWEEN THE WATERLINE AND THE WASTEWATER MAIN OR LATERAL SHALL BE PROVIDED. BOTH THE WATERLINE AND WASTEWATER MAIN OR LATERAL MUST PASS A PRESSURE AND LEAKAGE TEST AS SPECIFIED IN AWWA C600 STANDARDS.

**§290.44(E)(4)(B)(V)** WHERE A NEW POTABLE WATERLINE CROSSES A NEW, PRESSURE RATED WASTEWATER MAIN OR LATERAL, ONE SEGMENT OF THE WATERLINE PIPE SHALL BE CENTERED OVER THE WASTEWATER LINE SUCH THAT THE JOINTS OF THE WATERLINE PIPE ARE EQUIDISTANT AND AT LEAST NINE FEET HORIZONTALLY FROM THE CENTER LINE OF THE WASTEWATER MAIN OR LATERAL. THE POTABLE WATERLINE SHALL BE AT LEAST SIX INCHES ABOVE THE WASTEWATER MAIN OR LATERAL. WHENEVER POSSIBLE, THE CROSSING SHALL BE CENTERED BETWEEN THE JOINTS OF THE WASTEWATER MAIN OR LATERAL. THE WASTEWATER PIPE SHALL HAVE A MINIMUM PRESSURE RATING OF AT LEAST 150 PSI. THE WASTEWATER MAIN OR LATERAL SHALL BE EMBEDDED IN CEMENT STABILIZED SAND (SEE CLAUSE (VI) OF THIS SUBPARAGRAPH) FOR THE TOTAL LENGTH OF ONE PIPE SEGMENT PLUS 12 INCHES BEYOND THE JOINT ON EACH END.

**§290.44(E)(4)(B)(VI)** WHERE CEMENT STABILIZED SAND BEDDING IS REQUIRED, THE CEMENT STABILIZED SAND SHALL HAVE A MINIMUM OF 10% CEMENT PER CUBIC YARD OF CEMENT STABILIZED SAND MIXTURE, BASED ON LOOSE DRY WEIGHT VOLUME (AT LEAST 2.5 BAGS OF CEMENT PER CUBIC YARD OF MIXTURE). THE CEMENT STABILIZED SAND BEDDING SHALL BE A MINIMUM OF SIX INCHES ABOVE AND FOUR INCHES BELOW THE WASTEWATER MAIN OR LATERAL. THE USE OF BROWN COLORING IN CEMENT STABILIZED SAND FOR WASTEWATER MAIN OR LATERAL BEDDING IS RECOMMENDED FOR THE IDENTIFICATION OF PRESSURE RATED WASTEWATER MAINS DURING FUTURE CONSTRUCTION.

**§290.44(E)(5)** WATERLINE AND WASTEWATER MAIN OR LATERAL MANHOLE OR CLEANOUT SEPARATION. THE SEPARATION DISTANCE FROM A POTABLE WATERLINE TO A WASTEWATER MAIN OR LATERAL MANHOLE OR CLEANOUT SHALL BE A MINIMUM OF NINE FEET. WHERE THE NINE-FOOT SEPARATION DISTANCE CANNOT BE ACHIEVED, THE POTABLE WATERLINE SHALL BE ENCASED IN A JOINT OF AT LEAST 150 PSI PRESSURE CLASS PIPE AT LEAST 18 FEET LONG AND TWO NOMINAL SIZES LARGER THAN THE NEW CONVEYANCE. THE SPACE AROUND THE CARRIER PIPE SHALL BE SUPPORTED AT FIVE-FOOT INTERVALS WITH SPACERS OR BE FILLED TO THE SPRINGLINE WITH WASHED SAND. THE ENCASEMENT PIPE SHALL BE CENTERED ON THE CROSSING AND BOTH ENDS SEALED WITH CEMENT GROUT OR MANUFACTURED SEALANT.

**§290.44(E)(6)** LOCATION OF FIRE HYDRANTS. FIRE HYDRANTS SHALL NOT BE INSTALLED WITHIN NINE FEET VERTICALLY OR HORIZONTALLY OF ANY WASTEWATER MAIN, WASTEWATER LATERAL, OR WASTEWATER SERVICE LINE REGARDLESS OF CONSTRUCTION.

## WATER NOTES

1. WATERLINE AND FITTING MATERIAL OF CONSTRUCTION

   A. WATERLINES LESS THAN 4-INCH

   PIPE: PVC, SCHEDULE 40 (UNLESS OTHERWISE DESIGNATED ON PLANS). FITTINGS: PVC, SCHEDULE 40 (UNLESS OTHERWISE DESIGNATED ON PLANS).
   JOINTS: SOLVENT WELD.

   B. WATERLINES 4-INCH TO 12-INCH

   PIPE: PVC, AWWA C900, DR 18 WITH DUCTILE IRON FITTINGS PER AWWA C110 OR C153. ALL BURIED BOLTING SHALL BE TYPE 304 STAINLESS STEEL. FITTINGS SHALL BE COATED (INTERIOR) WITH CEMENT-MORTAR LINING IN ACCORDANCE WITH ANSI/AWWA C104/A 21.4-03. ALL BENDS TO BE RESTRAINED JOINT "MEGA-LUG" CONSTRUCTION

   JOINTS: PUSH-ON (RUBBER GASKETED) OR MECHANICAL (RUBBER GASKETED).

   THRUST CONTROL: RESTRAINED JOINT, MEGA-LUG.

   C. WATERLINES 14-INCH TO 48-INCH

   PIPE: PVC, AWWA C905-10 (UNLESS OTHERWISE NOTED ON PLANS), WITH DUCTILE IRON FITTINGS PER AWWA C110 OR C153. ALL BURIED BOLTING SHALL BE TYPE 304 STAINLESS STEEL. FITTINGS SHALL BE COATED (INTERIOR) WITH CEMENT-MORTAR LINING IN ACCORDANCE WITH ANSI/AWWA C104/A 21.4-03. ALL BENDS TO BE RESTRAINED JOINT "MEGA-LUG" CONSTRUCTION

   JOINTS: PUSH-ON (RUBBER GASKETED) OR MECHANICAL (RUBBER GASKETED).

   THRUST CONTROL: RESTRAINED JOINT, MEGA-LUG.

   D. WATERLINE OFFSETS (USED ONLY IF DESIGNATED ON PLANS)

   OFFSETS TO BE IN ACCORDANCE WITH DETAILS ON PLANS.

   E. WATERLINE CASING

   STEEL IN ACCORDANCE WITH AWWA C200, MINIMUM WALL THICKNESS AND SIZE AS DESIGNATED ON PLANS.

   CONTRACTOR SHALL INSTALL CASINGS PER DETAILS ON PLANS.

   F. SERVICE LINES

   SERVICE LINES, AS SHOWN ON THE PLANS AND WHERE DIRECTED BY CITY OF LA MARQUE, ARE TO BE INSTALLED PER DETAILS ON PLANS.

2. PIPE BEDDING TO MEET THE REQUIREMENTS IN SPECIFICATION AND DETAILS ON PLANS. TYPE AND DEPTH OF BEDDING IS DEPENDENT UPON PIPE MATERIAL, LOCATION, AND TYPE OF CONSTRUCTION OF THE PROPOSED LINE.
3. VALVE BOXES LOCATED IN DRAINAGE DITCHES OR IN BACK SLOPE SHALL BE FLUSH WITH THE FINISHED GRADE.
4. WATER LINE INSTALLATION AND TESTING SHALL COMPLY WITH AWWA AND THE TEXAS COMMISSION ENVIRONMENTAL QUALITY REQUIREMENTS. (TCEQ)
5. FLUSHING, DISINFECTION, AND BACTERIOLOGICAL SAMPLING OF WATER LINE SHALL BE DONE IN ACCORDANCE WITH TCEQ REGULATIONS AND AWWA STANDARDS.
6. DISINFECTION OF WATER LINE SHALL INCLUDE 50 PPM CHLORINE SOLUTION WHEN THE WATER LINE IS FLUSHED. BACTERIALOGICAL SAMPLES SHALL BE COLLECTED FOR EACH COMPLETED SECTION OF THE WATER LINE AND THESE SAMPLES MUST BE FOUND TO CONTAIN NO COLIFORM ORGANISMS PRIOR TO PLACING THE WATER LINE IN SERVICE. SAMPLES TO BE WITNESSED, ACCEPTED AND TRANSPORTED TO THE LAB BY CITY OF LA MARQUE PERSONNEL.
7. AT OPEN DITCH ROADS WATER LINES SHALL HAVE A (5) FIVE FOOT OF COVER FROM NATURAL GROUND WITH A MINIMUM(3) THREE FOOT COVER FROM THE FLOW LINE OF THE DITCH. AT CURB AND GUTTER ROADS WATER LINES SHALL HAVE A (4) FOUR FOOT COVER FROMK TOP OF CURB.
8. CONTRACTOR SHALL MAINTAIN A MINIMUM OF 6" CLEARANCE AT STORM SEWER CROSSINGS AND A MINIMUM OF (2) TWO FEET CLEARANCE BETWEEN THE PROPOSED WATERLINE AND ALL PIPELINES, UNLESS OTHERWISE NOTED ON PLANS.
9. ALL BURIED BOLTS SHALL BE 304 STAINLESS STEEL.
10. ALL FITTINGS TO BE MECHANICAL JOINT WITH MEGA-LUG.
11. GATE VALVES SHALL OPEN COUNTERCLOCKWISE, IN ACCORDANCE WITH CITY OF LA MARQUE CRITERIA.
12. SERVICE LEADS ARE INCLUDED IN THIS CONTRACT.
13. TAPPING SADDLES TO BE FULL CIRCLE STAINLESS STEEL; TAPPING VALVES TO BE FLANGED / MECHANICAL JOINT. VALVE TO OPEN COUNTERCLOCKWISE.
14. CONTRACTOR IS TO COORDINATE ANY WATER OUTAGES WITH EFFECTED PROPERTY OWNER AND THE CITY OF LA MARQUE.
15. CONTRACTOR IS TO NOTIFY THE CITY OF LA MARQUE 24 HRS IN ADVANCE OF THE NEED TO CLOSE ANY VALVES AND THE CITY SHALL PERFORM CLOSINGS / OPENINGS.
16. WATER LINES MUST HAVE 2" CONNECTIONS FOR FLUSHING AND BACTERIOLOGIAL (CHLORINATION). NO SEPARATE PAY.
17. FIRE HYDRANT LEADS TO BE PVC PER AWWA C-900, CLASS DR-18. THE LEADS SHALL HAVE MECHANICAL JOINT FITTINGS. (SEE DETAIL IN PLANS). MECHANICAL JOINT BOLTS AND NUTS TO BE "304 S.S." ALL THREAD HARNESS BOLTS AND NUTS TO BE TYPE 304 S.S.. PLACE PEA GRAVEL AROUND WEEP HOLES.
18. FIRE HYDRANTS SHALL HAVE A MINIMUM (3) THREE INCH CLEARANCE AND A MAXIMUM (6) SIX INCH CLEARANCE BETWEEN NATURAL GROUND AND HYDRANT FLANGE. ALL FIRE HYDRANTS SHALL BE AUDITED, SAND BLASTED, AND PAINTED PER CITY OF LA MARQUE SPECIFICATIONS. INSTALLED WITH STRAPS NOT CHAINS. NO SEPARATE PAY.
19. AT EXISTING VALVES TO BE ABANDONED, CONTRACTOR IS TO CLOSE VALVE, REMOVE VALVE BOX AND FILL OLD VALVE BOX CAVITY WITH NON-SHRINK EPOXY GROUT TO 6" BELOW SURFACE. SURFACE TO MATCH SURROUNDING AREA (GRASS IN GRASS, ETC.). BID ITEM COVERS ALL ABANDONED VALVES AND BOX REMOVALS. VALVES ALONG EXISTING LINES TO BE ABANDONED ARE TO BE ABANDONED.
20. CONTRACTOR TO PROVIDE SERVICE LEADS AS INDICATED ON PLAN SHEETS 06-12.
21. WHEN WORKING ON PRIVATE PROPERTY TO RECONNECT EXISTING WATER SERVICES, CONTRACTOR MUST USE EXTREME CARE TO PROTECT EXISTING FACILITIES. ANY DAMAGES TO EXISTING FENCES, SHRUBBERY, FLOWER BEDS, DRIVEWAYS, WALKWAYS, ETC. TO BE RESTORED TO ORIGINAL OR BETTER CONDITION. INCLUDE COST OF ANY DAMAGES ON PRIVATE PROPERTY TO UNIT PRICE BID PER EACH FOR "HOUSE SERVICE CONNECTION FROM HOUSE TO METERS."
22. CONTRACTOR IS TO PROVIDE PROTECTION AT OPEN TRENCH EXCAVATION AND BORE PITS TO PREVENT SILT RUN-OFF INTO EXISTING STORM SEWERS. FILTER FABRIC FENCING ADJACENT TO EXCAVATION OR GRAVEL BAGS AT INLETS MAY BE USED. INCLUDE COST OF FENCING AND/OR HAY BALES IN PRICE BID FOR MULTIPLE SWPPP ITEMS.
23. HYDROMULCH SEED ALL DISTURBED AREAS NOT COVERED BY DRIVEWAY SURFACE, UNLESS ORTHERWISE DIRECTED BY THE CITY OR ITS REPRESENTATIVE.
24. CONTRACTOR TO DELIVER SALVAGED FIRE HYDRANTS AND OTHER SALVAGED ITEMS TO THE CITY OF LA MARQUE W.W.T.P. FACILITY.
25. DO NOT LOCATE FIRE HYDRANTS CLOSER THAN 3 FEET FROM CURBED DRIVEWAYS OR 5 FOOT FROM NONCURBED DRIVEWAYS.
26. BENDS OR OFFSETS IN FIRE HYDRANT BRANCH WILL NOT BE ALLOWED.

## UTILITY NOTES

**CAUTION: AT&T TEXAS/SWBT FACILITIES**

1. THE LOCATIONS OF AT&T TEXAS/SWBT FACILITIES ARE SHOWN IN AN APPROXIMATE WAY ONLY. THE CONTRACTOR SHALL DETERMINE THE EXACT LOCATION BEFORE COMMENCING WORK. HE AGREES TO BE FULLY RESPONSIBLE FOR ANY AND ALL DAMAGES WHICH MIGHT BE OCCASIONED BY THIS FAILURE TO EXACTLY LOCATE AND PRESERVE THESE UNDERGROUND UTILITIES.
2. THE CONTRACTOR SHALL CALL 1-800-344-8377 A MINIMUM OF 48 HOURS PRIOR TO CONSTRUCTION TO HAVE UNDERGROUND LINES FIELD LOCATED.
3. WHEN EXCAVATING WITHIN EIGHTEEN INCHES (18") OF THE INDICATED LOCATION OF AT&T TEXAS/SWBT FACILITIES, ALL EXCAVATIONS MUST BE ACCOMPLISHED USING NON-MECHANIZED EXCAVATION PROCEDURES. WHEN BORING, THE CONTRACTOR SHALL EXPOSE THE AT&T TEXAS/SWBT FACILITIES.
4. WHEN AT&T TEXAS/SWBT FACILITIES ARE EXPOSED, THE CONTRACTOR WILL PROVIDE SUPPORT TO PREVENT DAMAGE TO THE CONDUIT DUCTS OR CABLES. WHEN EXCAVATING NEAR TELEPHONE POLES THE CONTRACTOR SHALL BRACE THE POLE FOR SUPPORT.
5. THE PRESENCE OR ABSENCE OF AT&T TEXAS/SWBT UNDERGROUND CONDUIT FACILITIES OR BURIED CABLE FACILITIES SHOWN ON THESE PLANS DOES NOT MEAN THAT THERE ARE NO DIRECT BURIED CABLES OR OTHER CABLES IN CONDUIT IN THE AREA.
6. PLEASE CONTACT THE AT&T TEXAS DAMAGE PREVENTION MANAGER KEVIN RAY AT (713) 614-1983 OR EMAIL AT KR7896@ATT.COM IF CABLE LOCATE REQUESTS ARE NOT COMPLETED FOR OUR AT&T TEXAS/SWBT FACILITIES.

**WARNING: TEXAS NEW MEXICO OVERHEAD ELECTRIC FACILITIES**

OVERHEAD LINES MAY EXIST ON THE PROPERTY. WE HAVE NOT ATTEMPTED TO MARK THOSE LINES SINCE THEY ARE CLEARLY VISIBLE, BUT YOU SHOULD LOCATE THEM PRIOR TO BEGINNING ANY CONSTRUCTION. TEXAS LAW, SECTION 752, HEALTH & SAFETY CODE, FORBIDS ALL ACTIVITIES IN WHICH PERSONS OR THINGS MAY COME WITHIN SIX (6) FEET OF LIVE OVERHEAD HIGH VOLTAGE LINES. PARTIES RESPONSIBLE FOR THE WORK, INCLUDING CONTRACTORS, ARE LEGALLY RESPONSIBLE FOR THE SAFETY OF CONSTRUCTION WORKERS UNDER THIS LAW. THIS LAW CARRIES BOTH CRIMINAL AND CIVIL LIABILITY. TO ARRANGE FOR LINES TO BE TURNED OFF OR REMOVED CALL TEXAS NEW MEXICO POWER COMPANY, AT 1-888-866-7456.

**CAUTION: UNDERGROUND GAS FACILITIES**

THE CONTRACTOR SHALL CONTACT THE UTILITY COORDINATING COMMITTEE AT 1-800-545-6005 OR 811 A MINIMUM OF 48 HOURS PRIOR TO CONSTRUCTION TO HAVE A MAIN AND SERVICE LINES FIELD LOCATED.

- WHEN CENTERPOINT ENERGY PIPELINE MARKINGS ARE NOT VISIBLE, CALL (713) 207-5463 OR (713) 945-8037 (7:00 A.M. TO 4:30 P.M.) FOR STATUS OF LINE LOCATION REQUEST BEFORE EXCAVATION BEGINS.
- WHEN EXCAVATING WITHIN EIGHTEEN INCHES (18") OF THE INDICATED LOCATION OF CENTERPOINT ENERGY FACILITIES, ALL EXCAVATION MUST BE ACCOMPLISHED USING NON-MECHANIZED EXCAVATION PROCEDURES.
- WHEN CENTERPOINT ENERGY FACILITIES ARE EXPOSED, SUFFICIENT SUPPORT MUST BE PROVIDED TO THE FACILITIES TO PREVENT EXCESSIVE STRESS ON THE PIPING.
- FOR EMERGENCIES REGARDING GAS LINES CALL (713) 659-2111 OR (713) 207-4200.

THE CONTRACTOR IS FULLY RESPONSIBLE FOR ANY DAMAGES CAUSED BY HIS FAILURE TO EXACTLY LOCATE AND PRESERVE THESE UNDERGROUND FACILITIES.

**CAUTION: UNDERGROUND CABLE FACILITIES**

TELEPHONE AND TELEVISION CABLE EXISTS UNDERGROUND THROUGHOUT THE PROPOSED PROJECT AREA. CONTRACTOR TO CONTACT "DIG-TESS" AT 1-800-344-8377 AT LEAST 48 HOURS PRIOR TO BEGINNING ANY CONSTRUCTION FOR LOCATION AND MARKING OF UNDERGROUND CABLE.

**CAUTION: UNDERGROUND ELECTRICAL FACILITIES**

THE CONTRACTOR SHALL CONTACT THE UTILITY COORDINATING COMMITTEE AT 1-800-545-6005 OR 811 A MINIMUM OF 48 HOURS PRIOR TO CONSTRUCTION TO HAVE A MAIN AND SERVICE LINES FIELD LOCATED.

- ALL INFORMATION CONCERNING TYPE AND LOCATION OF UNDERGROUND UTILITIES IS NOT GUARANTEED TO BE ACCURATE OR ALL INCLUSIVE. THE CONTRACTORS ARE RESPONSIBLE MAKING THEIR OWN DETERMINATIONS AS TO TYPE AND LOCATION OF UNDERGROUND UT

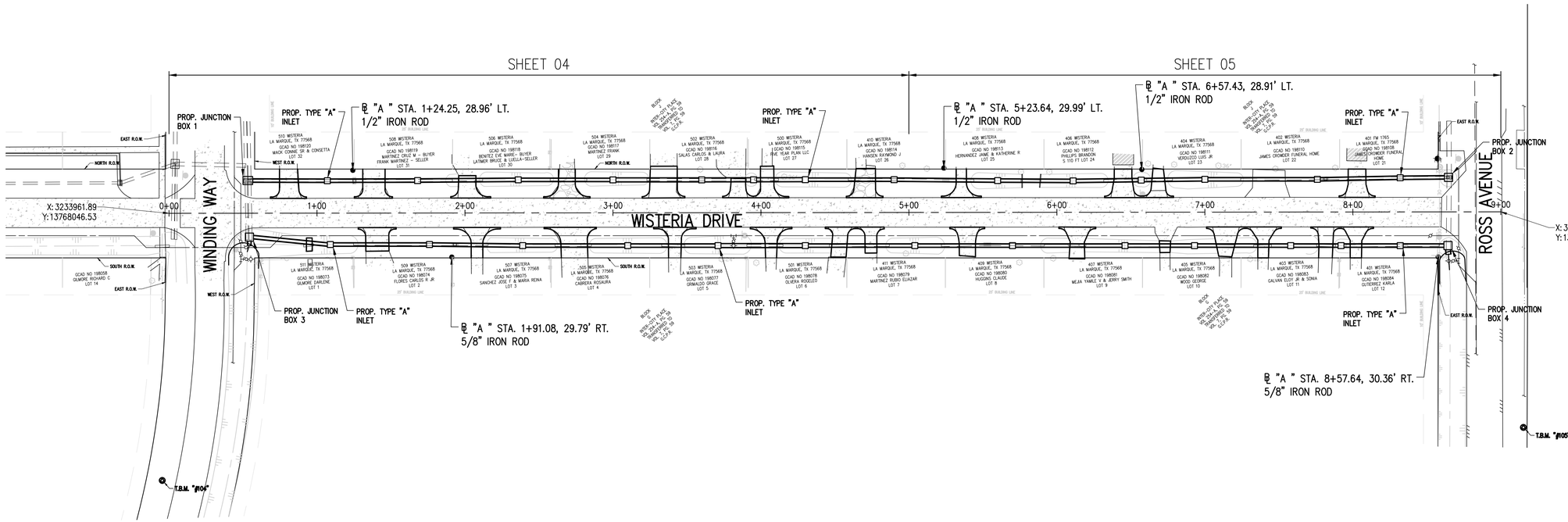


**BENCHMARK:**
**NATIONAL GEODETIC SURVEY MARKER B-1508 (PID AW5579)**
Steel rod stamped"B1508 1987" The marker is north 128' and east 100' from the centerline intersection of Ross Street and Oak Street.
NORTHING: 13705605.80 EASTING: 3255585.35
ELEV. 14.37 (NAVD 1988)

T.B.M.#105
SW top of bolt on 2.0' dia metal Power Pole (Shown hereon.)
NORTHING: 13708938.47 EASTING: 3256576.88
6.13 (NAVD 1988)

T.B.M.#104
Box cut in concrete (Shown hereon.)
NORTHING: 13708859.55 EASTING: 3255659.68
ELEV. 6.05 (NAVD 1988)

40 0 40 80
SCALE IN FEET

THESE DOCUMENTS ARE FOR INTERIM REVIEW AND ARE NOT INTENDED FOR CONSTRUCTION, BIDDING, OR PERMIT PURPOSES.

MARK E. HAVRAN
TEXAS P.E. NO. 118610
DATE:SEPTEMBER, 2024

| Revision | By | Chk. | Appr. | Date |
|---|---|---|---|---|
| | | | | |
| | | | | |
| | | | | |
| | | | | |

# CITY OF LA MARQUE
## WISTERIA DRAINAGE IMPROVEMENTS

## PROJECT LAYOUT
## HORIZONTAL & VERTICAL CONTROL

**LJA Engineering, Inc.**
11821 East Freeway
Suite 360
Houston, Texas 77029
Phone 713.450.1300
Fax 713.450.1385
FRN - F-1386

| | |
|---|---|
| DESIGN: M.E.H. | JOB No. E019-1014 Cont. No. |
| DRAWN: B.A.K. | DATE: SEPTEMBER, 2024 |
| CHECKED: | SCALE: 1" = 40' |
| APPROVED: | SHEET No. 03 Of 12 |

H:\ACAD\Clients\019\1014\Design\019-1014-03 Layout.dwg

08/30/24

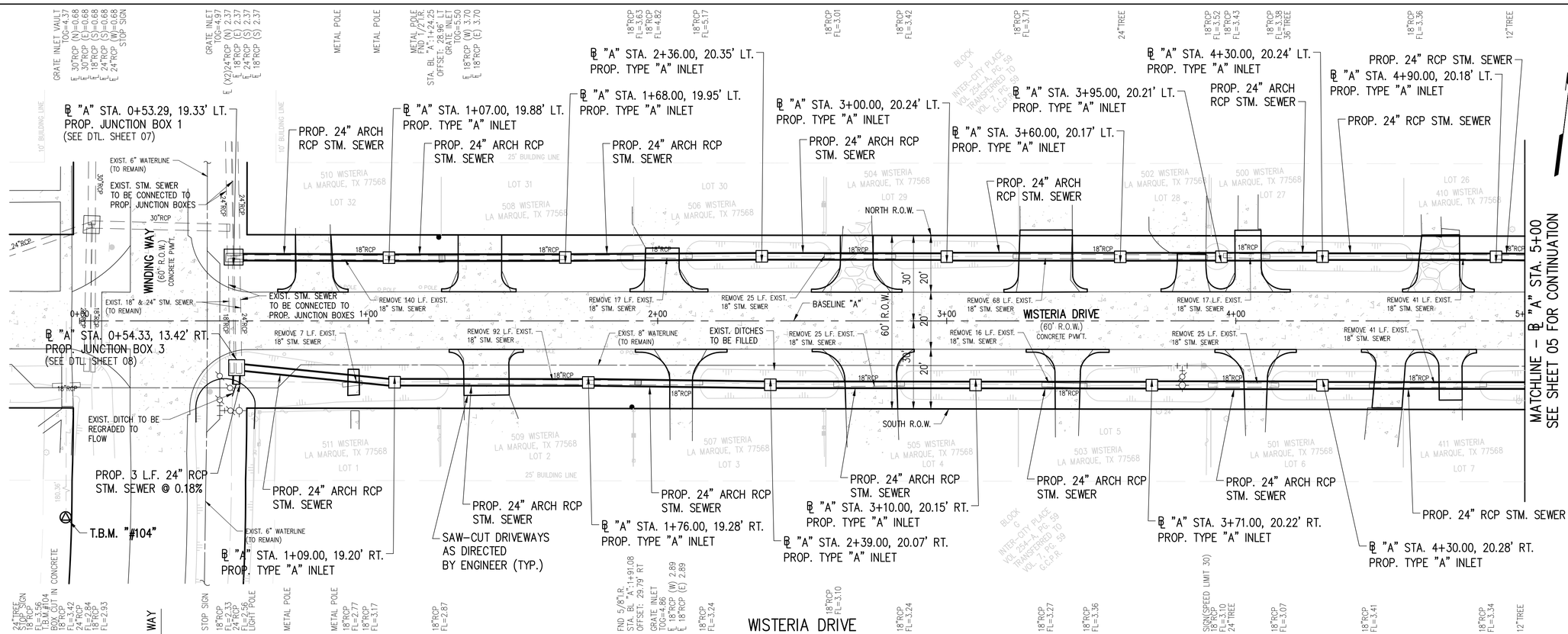


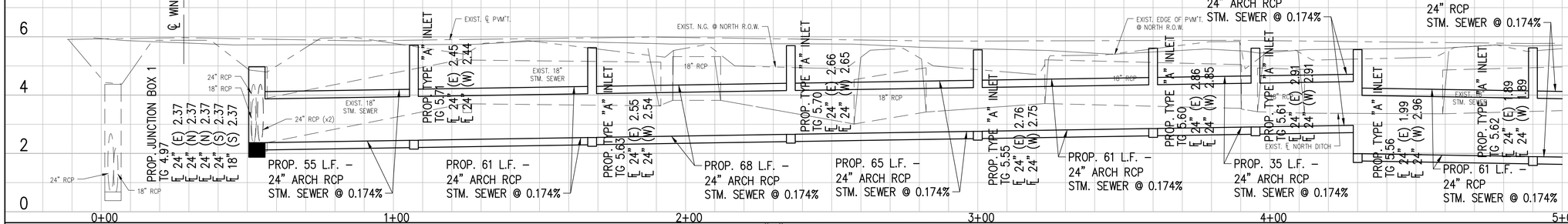


BASELINE "A" STATION - NORTH PROFILE

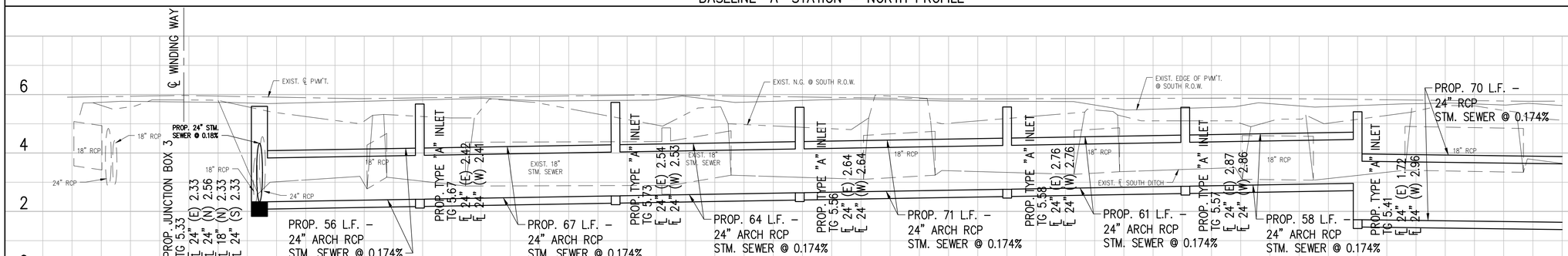


BASELINE "A" STATION - SOUTH PROFILE

09/19/24

BENCHMARK:
NATIONAL GEODETIC SURVEY MARKER B-1508 (PID AW5579)

Steel rod stamped"B1508 1987" The marker is north 128' and east 100' from the centerline intersection of Ross Street and Oak Street.
NORTHING: 13705605.80 EASTING: 3255585.35
ELEV. 14.37 (NAVD 1988)

T.B.M.#104
Box cut in concrete (Shown hereon.)
NORTHING: 13708859.55 EASTING: 3255659.68
ELEV. 6.05 (NAVD 1988)

SCALE IN FEET: 20 0 20 40

TO ARRANGE FOR LINES TO BE TURNED OFF OR REMOVED, CALL CENTERPOINT AT 713-207-2222

For your safety, you are required by Texas law to call 811 at least 48 hours before you dig so that underground lines can be marked. This Verification does not fulfill you obligation to call 811.

VERIFICATION OF PRIVATE UTILITIES

Mike Brower DATE 08/09/24
CenterPoint Energy/Natural Gas Facilities Verifications ONLY
(This Signature verifies that you have shown CNP Natural Gas lines correctly - not to be used for conflict verification) (Gas service lines are not shown)
Signature Valid for six months

Mike Brower DATE 08/09/24
CenterPoint Energy/UNDERGROUND Electrical Facilities Verifications ONLY
(This Signature verifies existing underground facilities - not to be used for conflict verification)
Signature Valid for six months

Jesse Rodriguez 08/08/2024 DATE
AT&T Texas / SWBT Facilities
(Approved for AT&T Texas / SWBT UNDERGROUND Conduit Facilities only)
Signature Valid for one year

THESE DOCUMENTS ARE FOR INTERIM REVIEW AND ARE NOT INTENDED FOR CONSTRUCTION, BIDDING, OR PERMIT PURPOSES.
MARK E. HAVRAN
TEXAS P.E. NO. 118610
DATE:SEPTEMBER, 2024

| Revision | By | Chk. | Appr. | Date |
|---|---|---|---|---|

# CITY OF LA MARQUE
## WISTERIA DRAINAGE IMPROVEMENTS

## WISTERIA DRIVE
## PLAN & PROFILE
## BEGINNING TO BL "A" STA. 5+00


LJA Engineering, Inc.
11821 East Freeway
Suite 360
Houston, Texas 77029
Phone 713.450.1300
Fax 713.450.1385
FRN - F-1386


| | |
|---|---|
| DESIGN: M.E.H. | JOB No. E019-1014 Cont. No. |
| DRAWN: B.A.K. | DATE: SEPTEMBER, 2024 |
| CHECKED: | SCALE: 1"=20' HORIZ.; 1"=2' VER. |
| APPROVED: | SHEET No. 04 Of 12 |

H:\ACAD\Clients\(019)1014\Design\019-1014-04 PP 01.dwg (XREF: 019-1013 Border, Base: profiles)

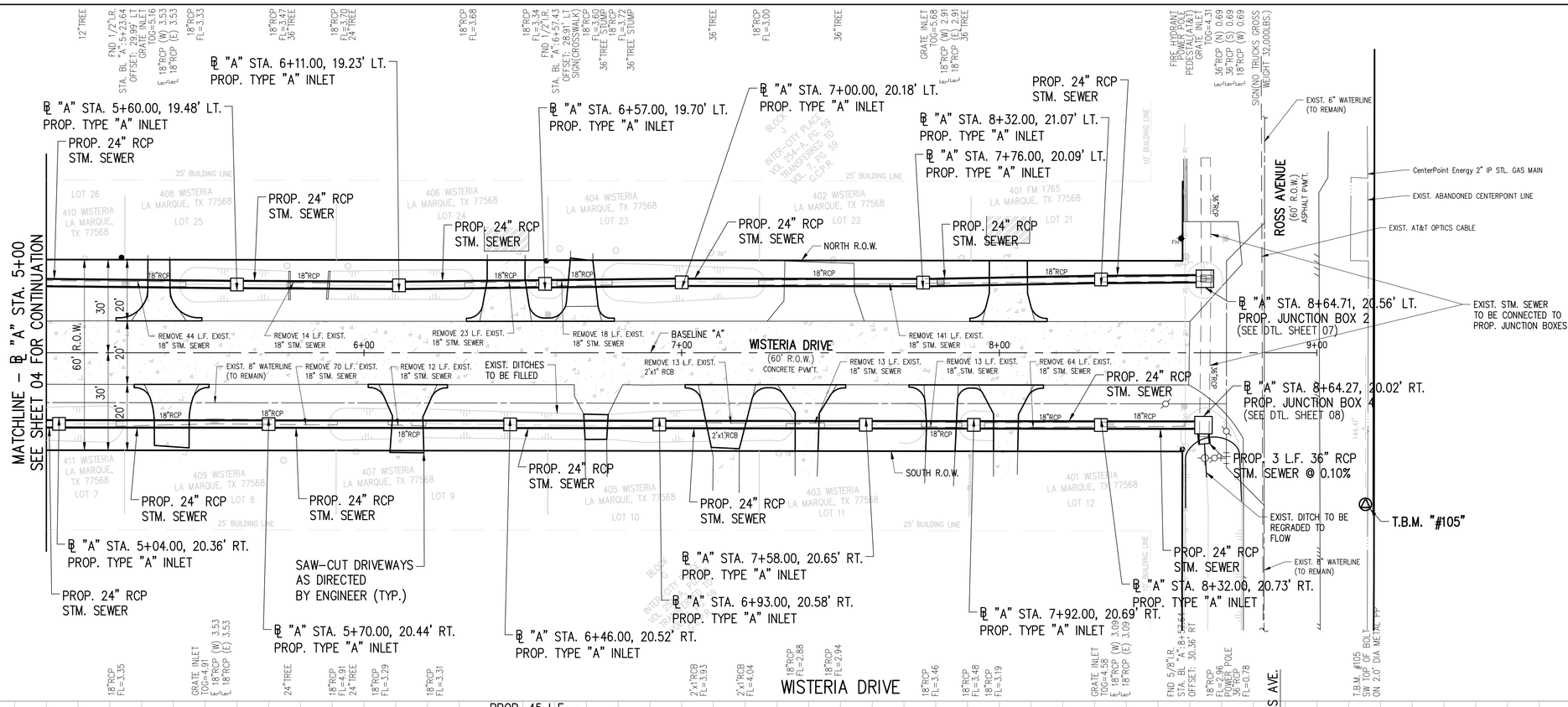


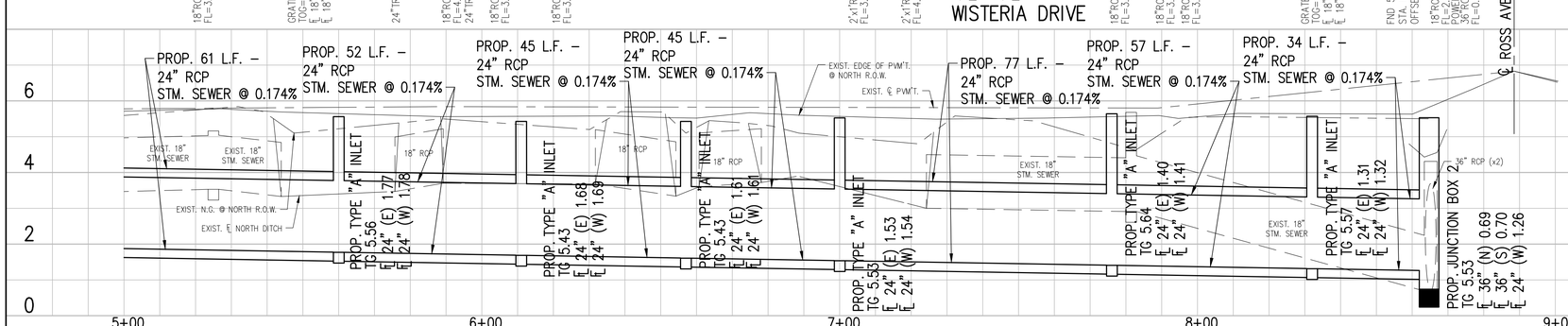


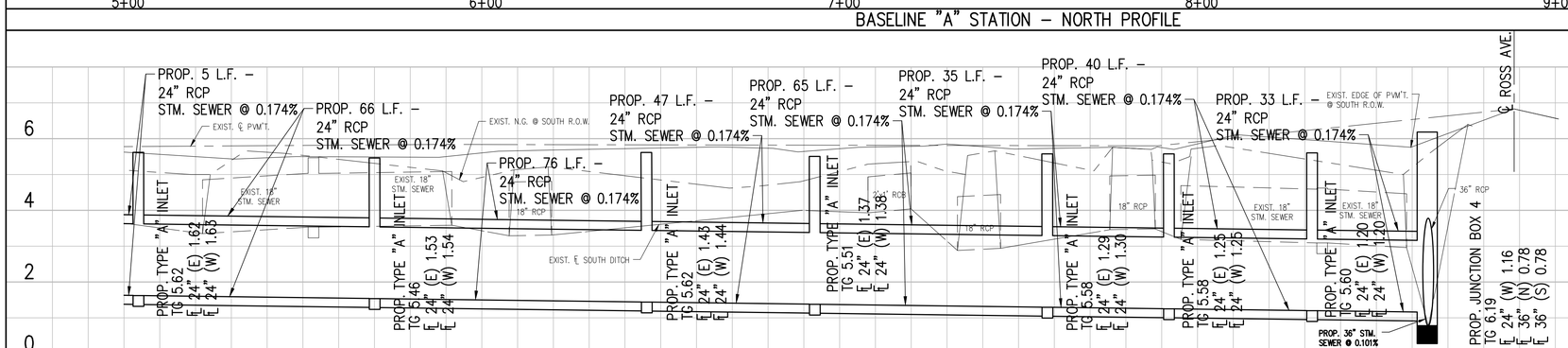


BENCHMARK:
NATIONAL GEODETIC SURVEY MARKER B-1508 (PID AW5579)

Steel rod stamped"B1508 1987" The marker is north 128' and east 100' from the centerline intersection of Ross Street and Oak Street.
NORTHING: 13705605.80 EASTING: 3255585.35
ELEV. 14.37 (NAVD 1988)

T.B.M.#105
SW top of bolt on 2.0' dia metal Power Pole (Shown hereon.)
NORTHING: 13708938.47 EASTING: 3256576.88
6.13 (NAVD 1988)

SCALE IN FEET: 20 0 20 40

TO ARRANGE FOR LINES TO BE TURNED OFF OR REMOVED, CALL CENTERPOINT AT 713-207-2222

For your safety, you are required by Texas law to call 811 at least 48 hours before you dig so that underground lines can be marked. This Verification does not fulfill you obligation to call 811.

VERIFICATION OF PRIVATE UTILITIES

Mike Brower DATE 08/09/24
CenterPoint Energy/Natural Gas Facilities Verifications ONLY
(This Signature verifies that you have shown CNP Natural Gas lines correctly – not to be used for conflict verification) (Gas service lines are not shown)
Signature Valid for six months

Mike Brower DATE 08/09/24
CenterPoint Energy/UNDERGROUND Electrical Facilities Verifications ONLY
(This Signature verifies existing underground facilities – not to be used for conflict verification)
Signature Valid for six months

Jesse Rodriguez DATE 08/08/2024
AT&T Texas / SWBT Facilities
(Approved for AT&T Texas / SWBT UNDERGROUND Conduit Facilities only)
Signature Valid for one year

THESE DOCUMENTS ARE FOR INTERIM REVIEW AND ARE NOT INTENDED FOR CONSTRUCTION, BIDDING, OR PERMIT PURPOSES.
MARK E. HAVRAN
TEXAS P.E. NO. 118610
DATE:SEPTEMBER, 2024

| Revision | By | Chk. | Appr. | Date |
|---|---|---|---|---|
| | | | | |

# CITY OF LA MARQUE
## WISTERIA DRAINAGE IMPROVEMENTS
## WISTERIA DRIVE PLAN & PROFILE
## BL "A" STA. 5+00 TO END


LJA Engineering, Inc.
11821 East Freeway
Suite 360
Houston, Texas 77029
Phone 713.450.1300
Fax 713.450.1385
FRN - F-1386


| | |
|---|---|
| DESIGN: M.E.H. | JOB No. E019-1014 Cont. No. |
| DRAWN: B.A.K. | DATE: SEPTEMBER, 2024 |
| CHECKED: | SCALE: 1"=20' HORIZ.; 1"=2' VER. |
| APPROVED: | SHEET No. 05 Of 12 |

H:\ACAD\Clients\019\1014\Design\019-1014-05 PP 02.dwg (XREF: 019-1013 Border, Base, profiles)

09/19/24

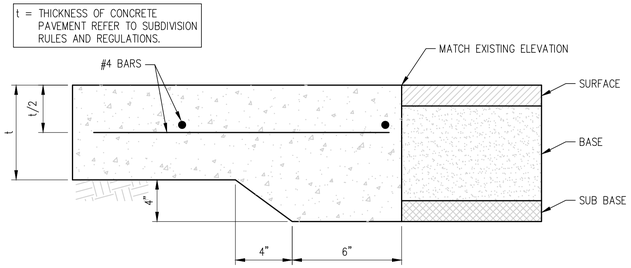


## CONCRETE TO ASPHALT STANDARD PAVING HEADER

N.T.S.

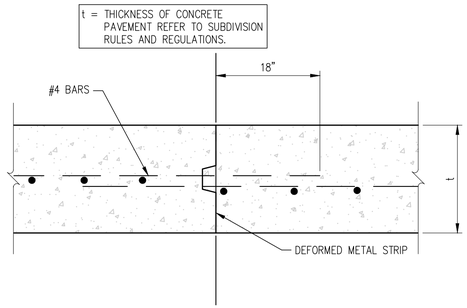


## CONSTRUCTION JOINT DETAIL

N.T.S.

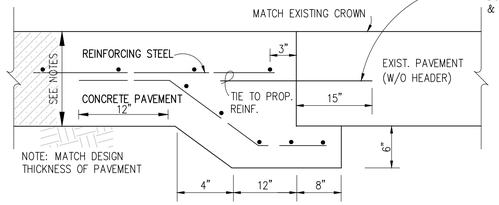


## CONCRETE TO CONCRETE STANDARD PAVING HEADER

N.T.S.

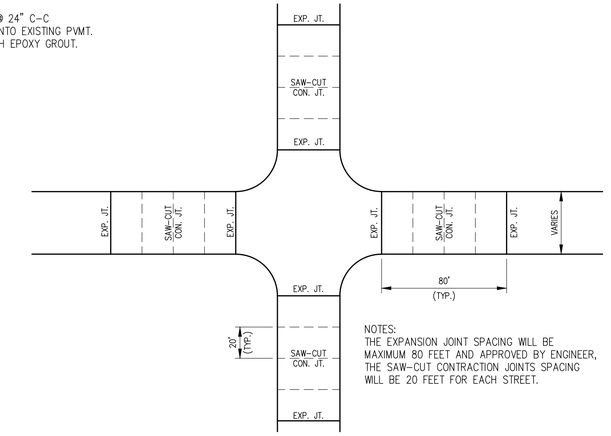


NOTES:
THE EXPANSION JOINT SPACING WILL BE MAXIMUM 80 FEET AND APPROVED BY ENGINEER, THE SAW-CUT CONTRACTION JOINTS SPACING WILL BE 20 FEET FOR EACH STREET.

## TYPICAL EXPANSION JOINT LAYOUT

N.T.S.

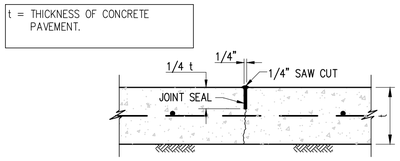


## SAW CUT CONTRACTION JOINT DETAIL

N.T.S.

NOTES:
1. WHERE SAWED JOINTS ARE PERMITTED BY THE ENGINEER, THEY SHALL BE SAWED AS SOON AS SAWING CAN BE ACCOMPLISHED, WITHOUT DAMAGE TO THE PAVEMENT, AND AS DIRECTED BY THE ENGINEER. ONCE SAWING HAS COMMENCED, IT SHALL BE CONTINUED UNTIL COMPLETED. THE SAW CUT SHALL BE MADE WITH ONE PASS OF THE CONCRETE SAW. SAWING MUST BE ACCOMPLISHED EVEN IN RAIN OR COLD WEATHER. ALL SAWING MUST BE COMPLETED WITHIN TWENTY-FOUR HOURS OF THE CONCRETE PAVEMENT PLACEMENT.

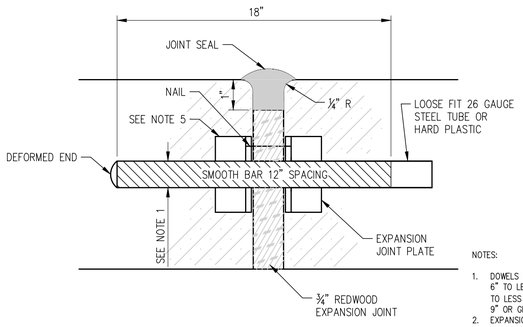


## EXPANSION JOINT DETAIL

N.T.S.

NOTES:
1. DOWELS FOR PAVEMENT EXPANSION SHALL BE 3/4"ø FOR 6" TO LESS THAN 7" PAVEMENT THICKNESS, 1"ø FOR 7" TO LESS THAN 9" PAVEMENT THICKNESS AND 1 1/4"ø FOR 9" OR GREATER PAVEMENT THICKNESS.
2. EXPANSION JOINT SHALL BE PLACED AT THE END OF EACH CURB RETURN AND AT MAXIMUM 80' SPACING.
3. ALL JOINT SEAL MATERIAL SHALL BE ASPHALT RUBBER ACCORDANCE WITH ASTM DESIGNATION D3405.
4. IF DEFORMED METAL STRIPS ARE ALLOWED, THEY SHALL BE STAKED IN PLACE WITH #3 BARS.
5. PRE-MANUFACTURED JOINT PLATE.

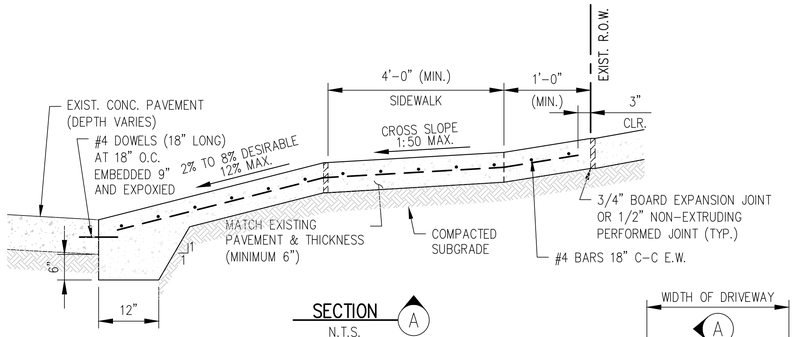


## SECTION A

N.T.S.

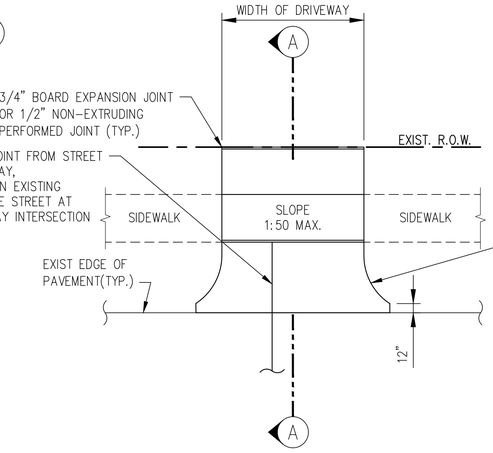


## DRIVEWAY AT CONC. PAVEMENT (IN RESIDENTIAL AREAS)

N.T.S.

NOTES:

1. PROPOSED DRIVEWAY SHALL BE BUILT WITH PORTLAND CEMENT CONCRETE, 5 SACK MINIMUM PER CUBIC YARD.
2. COMPACTION OF SUBGRADE TO 95% OF STANDARD PROTECTOR DENSITY (ASTM D698) (± 2% OPTIMUM MOISTURE) FOR PROPOSED DRIVEWAY CONNECTION. THE CITY ENGINEER RESERVES THE RIGHT TO INSPECT AND REQUIRE LABORATORY TEST TO BE CONDUCTED.
3. A PROPOSED DRIVEWAY TO BE BUILT ON A CORNER LOT CANNOT BE LOCATED WITHIN ANY PORTION OF THE PUBLIC STREET CURB RADII.
4. IF EXISTING STREET REBAR IS CUT OFF, THEN #4 DOWELS (18" LONG) NEED TO BE INSTALLED AT 18" SPACING, EMBEDDED 9 INCHES AND EXPOXIED.
5. 3" NON-METALLIC CHAIRS ARE REQUIRED.

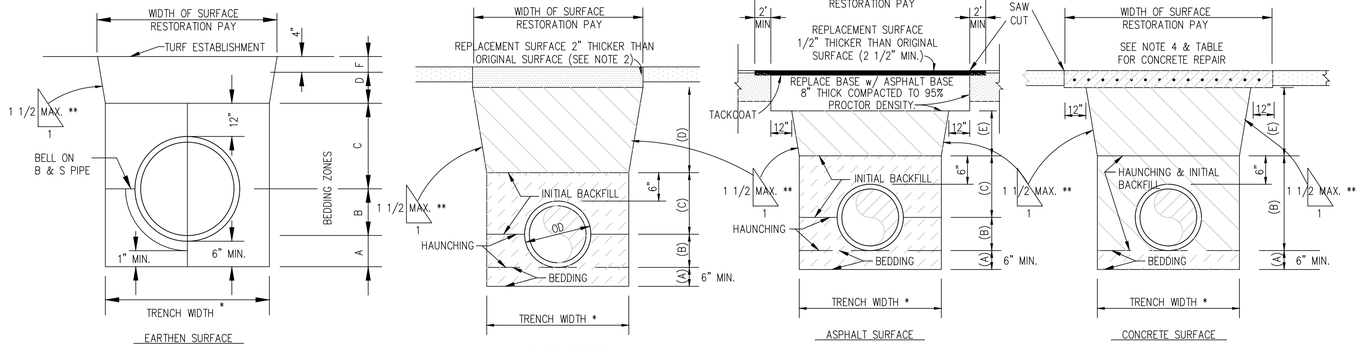


* PIPE LESS THAN 30"' MAX. 1'-6" + DIAMETER MIN. 1'-0" + DIAMETER

PIPE 30"' AND LARGER MAX. 2'-0" + DIAMETER MIN. 1'-4" + DIAMETER

** SLOPE FOR PAYMENT CALCULATIONS

ZONE MATERIALS
- AS- AGGREGATE STONE (MAY BE USED INLIEU OF CS IF APPROVED BY ENGINEER).
- BS- BANKSAND.
- CS- CEMENT STABILIZED SAND.
- EF- EARTH FILL (PLACED AFTER PIPE IS LAID)
- ES- EARTH FILL SELECT (PLACED WITH PIPE LAYING).
- TS- TOP SOIL.

| PIPE MATERIAL | ZONE MATERIALS A | B | C | D | E | F |
|---|---|---|---|---|---|---|
| CORRUGATED METAL PIPE | CS | CS | CS | EF | CS | TS |
| REINFORCED CONCRETE PIPE | CS | CS | CS | EF | CS | TS |
| DUCTILE IRON (PRESSURE PIPE) | BS | BS | BS | EF | CS | TS |
| DUCTILE IRON (GRAVITY PIPE) | CS | CS | CS | EF | CS | TS |
| PVC (PRESSURE PIPE) | BS | BS | BS | EF | CS | TS |
| PVC (GRAVITY PIPE) | CS | CS | CS | EF | CS | TS |
| STEEL | BS | BS | BS | EF | CS | TS |

EMBEDMENT, BACKFILL AND SURFACE RESTORATION NOTES
1. PAVEMENT REPAIRS SHALL BE MADE WITH LIKE MATERIALS TO THE EXISTING PAVEMENT UNLESS OTHERWISE NOTED.
2. UNPAVED DRIVEWAYS (NOT SURFACED WITH ASPHALT) SHALL BE REPAIRED WITH A MINIMUM OF 6 INCHES OF CRUSHED LIMESTONE.
3. PAVEMENT REPAIR SHALL EXTEND A MINIMUM OF 12 INCHES OUTSIDE THE TRENCH LINE ONTO UNDISTURBED SOIL.
4. CONCRETE PAVEMENT REPAIR TO INCLUDE:
   - A. SAW CUT (1" DEPTH) EXISTING CONCRETE PAVEMENT
   - B. CUT AND BEND REINFORCEMENT STEEL OUT OF PATH OF TRENCH
   - C. COMPLETE PIE LAYING BACKFILL OPERATION.
   - D. BEND STEEL BACK TO ORIGINAL LOCATION, SPLICE AS NECESSARY. SEE TABLE FOR BAR SIZES AND LENGTH OF SPLICE BAR.
   - E. REPLACEMENT CONCRETE SHALL BE 2 INCHES THICKER THAN THE ORIGINAL PAVEMENT.
5. SEE SPECIFICATION ITEM 2221 FOR SPECIFIC REQUIREMENTS FOR ZONE MATERIALS.

TABLE OF SLAB DEPTH & REINFORCEMENT

| Min. Depth of Slab | Width of Trench | Size of Bar | Spacing | Length of Bar |
|---|---|---|---|---|
| 8" | 18" | 4 | 9" | 40" |
| 8" | 24" | 4 | 8" | 46" |
| 8" | 30" | 4 | 7" | 52" |
| 8" | 36" | 4 | 6" | 58" |
| 10" | 42" | 4 | 8 1/2" | 64" |
| 10" | 48" | 4 | 7 1/2" | 70" |
| 10" | 54" | 4 | 7" | 76" |
| 10" | 60" | 4 | 6 1/2" | 82" |
| 10" | 66" | 5 | 9" | 88" |
| 10" | 72" | 6 | 8 1/2" | 94" |
| 10" | 78" | 6 | 8" | 100" |
| 10" | 84" | 6 | 7 1/2" | 106" |

## EMBEDMENT, BACKFILL AND SURFACE RESTORATION

N.T.S.

t = THICKNESS OF CONCRETE PAVEMENT REFER TO SUBDIVISION RULES AND REGULATIONS.

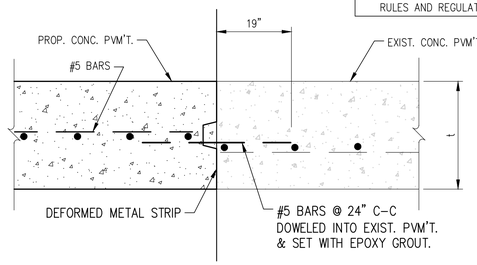


## CONCRETE TO CONCRETE TIE-IN

N.T.S.

THESE DOCUMENTS ARE FOR INTERIM REVIEW AND ARE NOT INTENDED FOR CONSTRUCTION, BIDDING, OR PERMIT PURPOSES.

MARK E. HAVRAN
TEXAS P.E. NO. 118610
DATE:SEPTEMBER, 2024

| Revision | By | Chk. | Appr. | Date |
|---|---|---|---|---|
| | | | | |

# CITY OF LA MARQUE WISTERIA DRAINAGE IMPROVEMENTS

## PAVEMENT DETAILS


**LJA Engineering, Inc.**
11821 East Freeway
Suite 360
Houston, Texas 77029
Phone 713.450.1300
Fax 713.450.1385
FRN - F-1386


| | |
|---|---|
| DESIGN: M.E.H. | JOB No. E019-1014 Cont. No. |
| DRAWN: B.A.K. | DATE: SEPTEMBER, 2024 |
| CHECKED: | SCALE: N.T.S. |
| APPROVED: | SHEET No. 06 Of 12 |

H:\ACAD\Clients\019\1014\Design\019-1014-06 PAVDETAILS.dwg (XREF: 135-0440 Border)

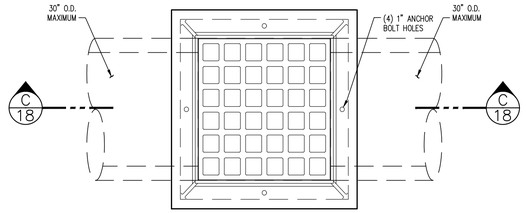


PLAN

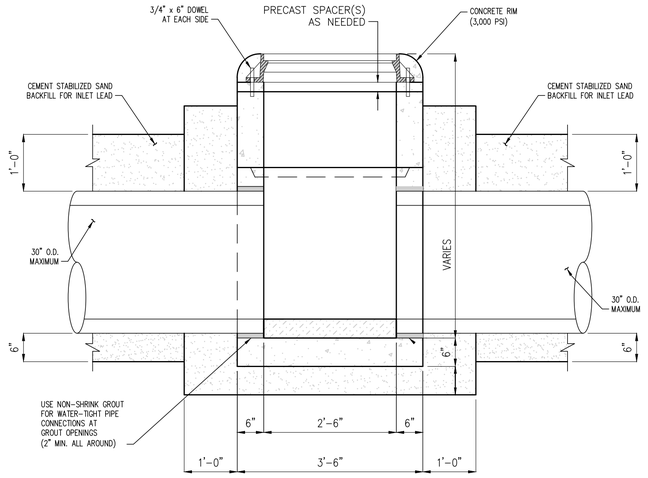


TYPE "A" GRATE INLET

N.T.S.

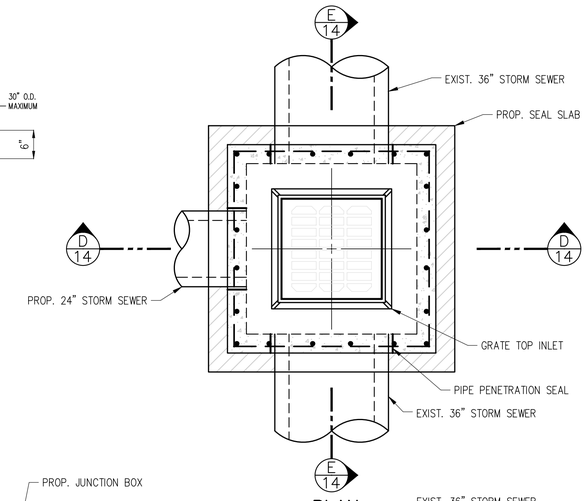


PLAN

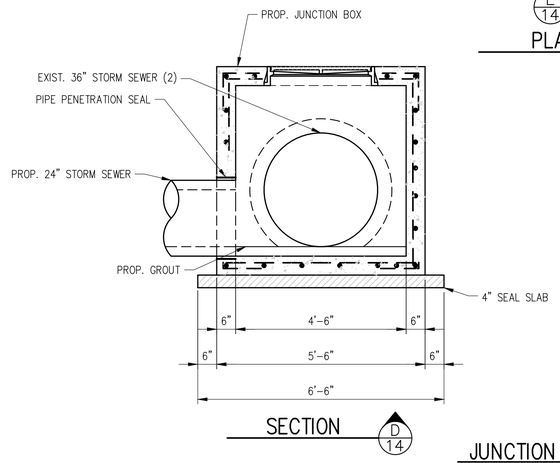


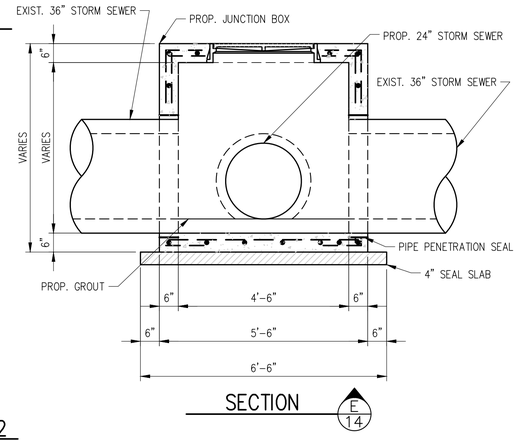


JUNCTION BOX 2

SCALE: 1/2" = 1'-0"

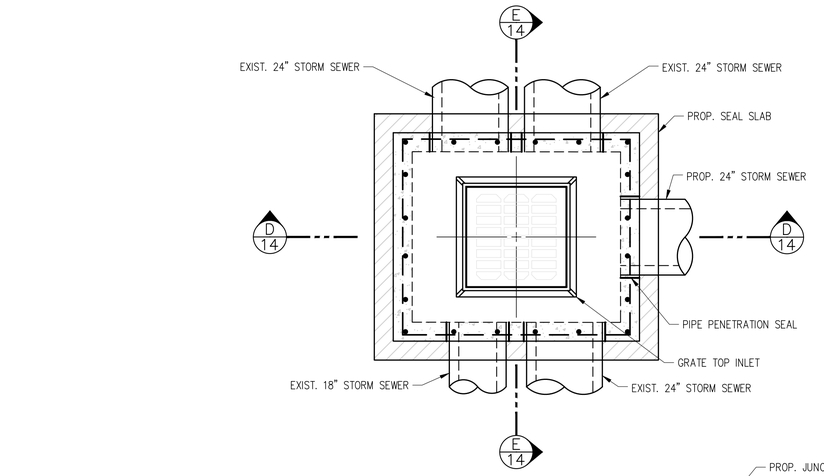


PLAN

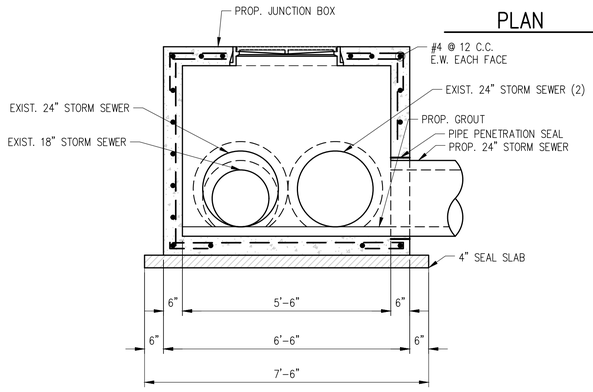


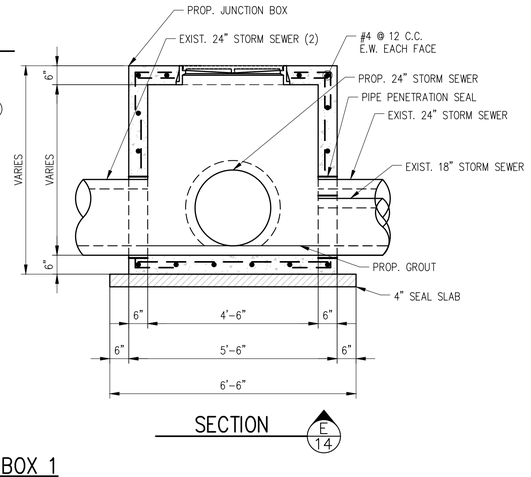


JUNCTION BOX 1

SCALE: 1/2" = 1'-0"

THESE DOCUMENTS ARE FOR INTERIM REVIEW AND ARE NOT INTENDED FOR CONSTRUCTION, BIDDING, OR PERMIT PURPOSES.

MARK E. HAVRAN
TEXAS P.E. NO. 118610
DATE:SEPTEMBER, 2024

| Revision | By | Chk. | Appr. | Date |
|---|---|---|---|---|
| | | | | |

# CITY OF LA MARQUE
## WISTERIA DRAINAGE IMPROVEMENTS

## STORM SEWER DETAILS
## SHEET 1 OF 2


**LJA Engineering, Inc.**
11821 East Freeway
Suite 360
Houston, Texas 77029
Phone 713.450.1300
Fax 713.450.1385
FRN - F-1386


| | |
|---|---|
| DESIGN: M.E.H. | JOB No. E019-1014 Cont. No. |
| DRAWN: B.A.K. | DATE: SEPTEMBER, 2024 |
| CHECKED: | SCALE: AS SHOWN |
| APPROVED: | SHEET No. 07 Of 12 |

H:\ACAD\Clients\019\1014\Design\019-1014-07 STM DETS 1.dwg (XREF: 135-044 Border)

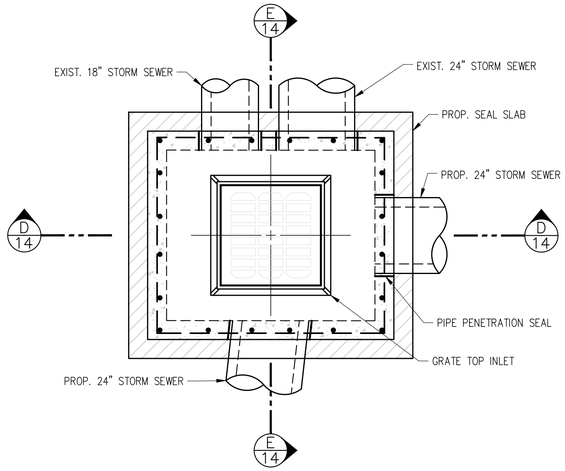


PLAN

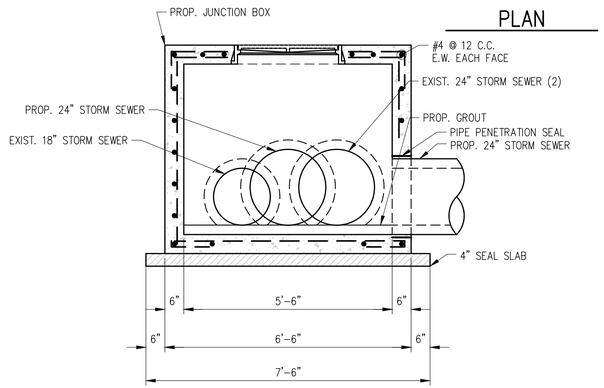


SECTION D 14

JUNCTION BOX 3

SCALE: 1/2" = 1'-0"

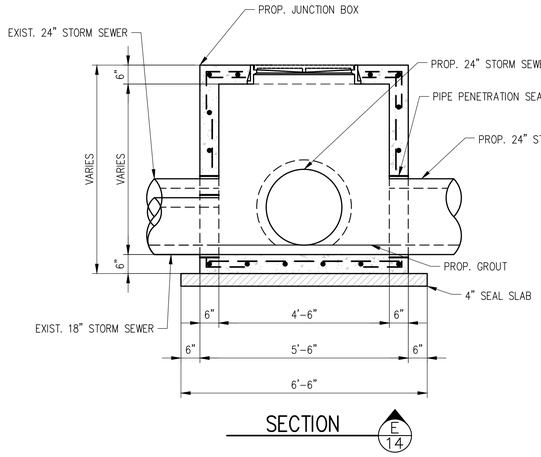


SECTION E 14

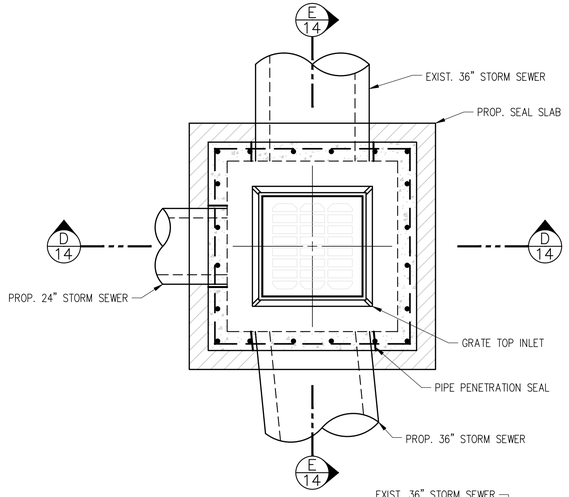


PLAN

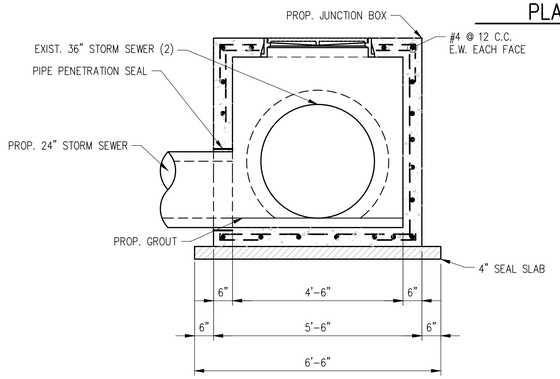


SECTION D 14

JUNCTION BOX 4

SCALE: 1/2" = 1'-0"

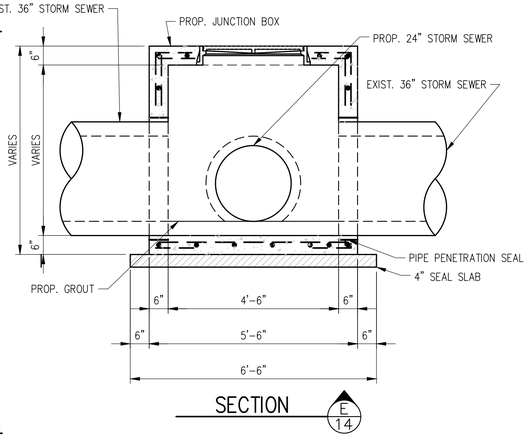


SECTION E 14

THESE DOCUMENTS ARE FOR INTERIM REVIEW AND ARE NOT INTENDED FOR CONSTRUCTION, BIDDING, OR PERMIT PURPOSES.

MARK E. HAVRAN
TEXAS P.E. NO. 118610
DATE:SEPTEMBER, 2024

| Revision | By | Chk. | Appr. | Date |
|---|---|---|---|---|
| | | | | |

# CITY OF LA MARQUE
## WISTERIA DRAINAGE IMPROVEMENTS

## STORM SEWER DETAILS
## SHEET 2 OF 2


**LJA Engineering, Inc.**
11821 East Freeway
Suite 360
Houston, Texas 77029
Phone 713.450.1300
Fax 713.450.1385
FRN - F-1386


| | |
|---|---|
| DESIGN: M.E.H. | JOB No. E019-1014 Cont. No. |
| DRAWN: B.A.K. | DATE: SEPTEMBER, 2024 |
| CHECKED: | SCALE: AS SHOWN |
| APPROVED: | SHEET No. 08 Of 12 |

H:\ACAD\Clients\019\1014\Design\019-1014-08 STM DETS 2.dwg (XREF: 135-044 Border)

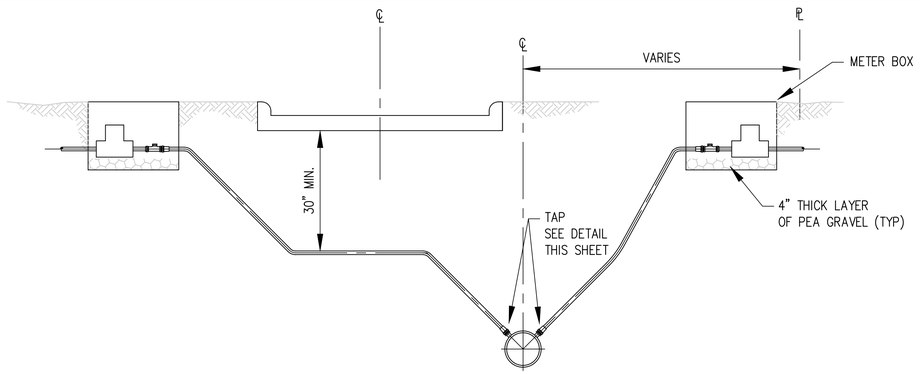


1. TWO SERVICE LINES MAY BE INSTALLED IN SAME TRENCH PROVIDED 4 INCHES OF CLEARANCE IS MAINTAINED. A MAXIMUM OF ONE METER MAY BE SET PER SERVICE LINE.
2. JETTING OR OPEN CUTTING FOR LONG SERVICE CONNECTIONS IS NOT PERMITTED UNLESS SPECIFICALLY REQUIRED BY THE PLANS.
3. ALL SEVICE LINES ARE TO BE POLYETHYLENE TUBING (MINIMUM 250 PSI RATED).
4. NO COUPLINGS ARE PERMITTED IN THE SERVICE LINE BETWEEN THE WATER MAIN AND METER BOX.
5. METER BOX AND METER TO BE PROVIDED AND INSTALLED BY THE CONTRACTOR.
6. WHERE POLYETHYLENE TUBING CONNECTS TO COMPRESSION FITTINGS, USE STAINLESS STEEL INSERTS.
7. CURB STOPS TO BE MUELLER, BALL VALVE TYPE, WITH COMPRESSION FITTINGS, EQUIPPED WITH LOCK WING.
8. WHERE CLEARANCE PROBLEMS EXIST, ANGLE CURB STOP (MUELLER MODEL 14258) WITH COMPRESSION FITTINGS MAY BE SUBSTITUTED WITH AGREEMENT BY THE ENGINEER.
9. WATER METERS TO BE HERSEY, POSITIVE DISPLACEMENT METERS.

## 3/4" TO 2" SERVICE CONNECTIONS

N.T.S.

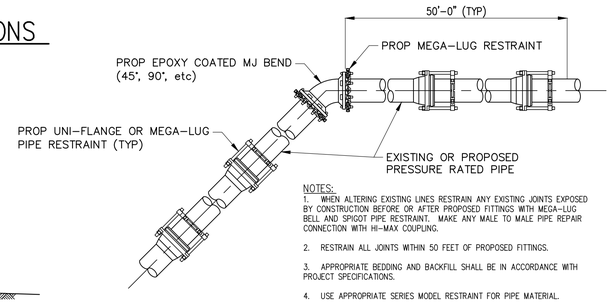


NOTES:
1. WHEN ALTERING EXISTING LINES RESTRAIN ANY EXISTING JOINTS EXPOSED BY CONSTRUCTION BEFORE OR AFTER PROPOSED FITTINGS WITH MEGA-LUG BELL AND SPIGOT PIPE RESTRAINT. MAKE ANY MALE TO MALE PIPE REPAIR CONNECTION WITH HI-MAX COUPLING.
2. RESTRAIN ALL JOINTS WITHIN 50 FEET OF PROPOSED FITTINGS.
3. APPROPRIATE BEDDING AND BACKFILL SHALL BE IN ACCORDANCE WITH PROJECT SPECIFICATIONS.
4. USE APPROPRIATE SERIES MODEL RESTRAINT FOR PIPE MATERIAL.

## RESTRAINT DETAIL FOR PRESSURE LINE WITH BEND-HORIZONTAL ADJUSTMENT

N.T.S.

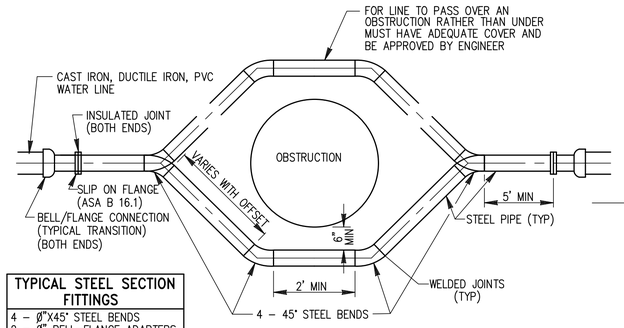


| TYPICAL STEEL SECTION FITTINGS |
|---|
| 4 - Ø"X45° STEEL BENDS |
| 2 - Ø" BELL-FLANGE ADAPTERS |
| 2 - Ø" SLIP-ON FLANGES 150 # |
| 2 - Ø" INSULATED JOINT KITS |

## STEEL PIPE OFFSET

### STEEL PIPE OFFSET NOTES

1. RESTRAIN EXISTING PIPING BEYOND STEEL SECTION AS REQUIRED TO PREVENT MOVEMENT.
2. STEEL PIPE TO BE STANDARD WALL THICKNESS.
3. STEEL PIPE TO BE COATED INSIDE AND OUTSIDE WITH FUSION BONDED EPOXY PER AWWA C-213.
4. INSULATED JOINT SHALL CONSIST OF INSULATING GASKETS, PLASTIC BOLTS SLEEVES AND WASHERS OF INSULATING GASKET MATERIAL BACKED BY CAD-PLATED WASHERS, OR OTHER MEANS APPROVED BY THE ENGINEER.

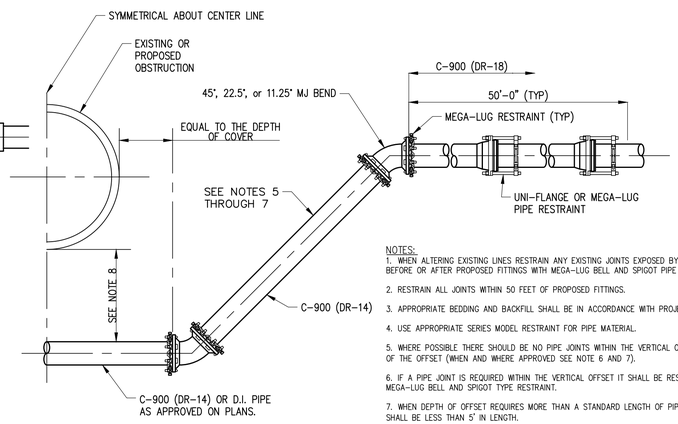


NOTES:
1. WHEN ALTERING EXISTING LINES RESTRAIN ANY EXISTING JOINTS EXPOSED BY CONSTRUCTION BEFORE OR AFTER PROPOSED FITTINGS WITH MEGA-LUG BELL AND SPIGOT PIPE RESTRAINT.
2. RESTRAIN ALL JOINTS WITHIN 50 FEET OF PROPOSED FITTINGS.
3. APPROPRIATE BEDDING AND BACKFILL SHALL BE IN ACCORDANCE WITH PROJECT SPECIFICATIONS.
4. USE APPROPRIATE SERIES MODEL RESTRAINT FOR PIPE MATERIAL.
5. WHERE POSSIBLE THERE SHOULD BE NO PIPE JOINTS WITHIN THE VERTICAL OR HORIZONTAL RUN OF THE OFFSET (WHEN AND WHERE APPROVED SEE NOTE 6 AND 7).
6. IF A PIPE JOINT IS REQUIRED WITHIN THE VERTICAL OFFSET IT SHALL BE RESTRAINED WITH MEGA-LUG BELL AND SPIGOT TYPE RESTRAINT.
7. WHEN DEPTH OF OFFSET REQUIRES MORE THAN A STANDARD LENGTH OF PIPE NO SEGMENT SHALL BE LESS THAN 5' IN LENGTH.
8. THE MINIMUM CLEARANCE SHALL BE DETERMINED BY THE AMOUNT OF BEDDING AND BACKFILL REQUIRED BY THE PROSPECTIVE PIPE AND THEIR USAGE. SEE THE BEDDING AND BACKFILL DETAILS FOR DIMENSIONS.

## RESTRAINED MECHANICAL JOINT VERTICAL OFFSET

N.T.S.

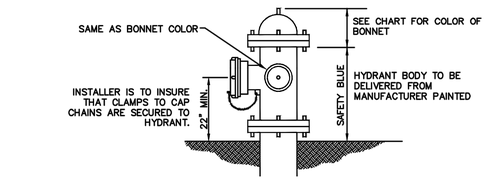


COLOR CODE

| | |
|---|---|
| FIRE HYDRANT BARREL | SAFETY RED (225A123) |
| FIRE HYDRANT CAPS | SAME AS BONNET COLOR |

COLOR CODE (BONNETS AND CAPS)

| MAIN SIZE | |
|---|---|
| 6" | GLOSS WHITE CODE NO. 225A100 |
| 8" | SAFETY ORANGE CODE NO. 225A122 |
| 10" AND 12" | JOHN DEERE GREEN CODE NO. 225A133 |
| 16" AND 20" | JOHN DEERE YELLOW CODE NO. 225A138 |
| 22" AND UP | SAFETY RED CODE NO. 225A123 |

## 2 FIRE HYDRANT - COLOR CODE

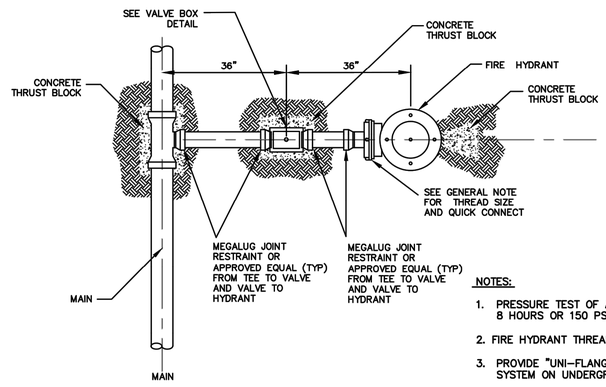


## 3 FIRE HYDRANT - PLAN

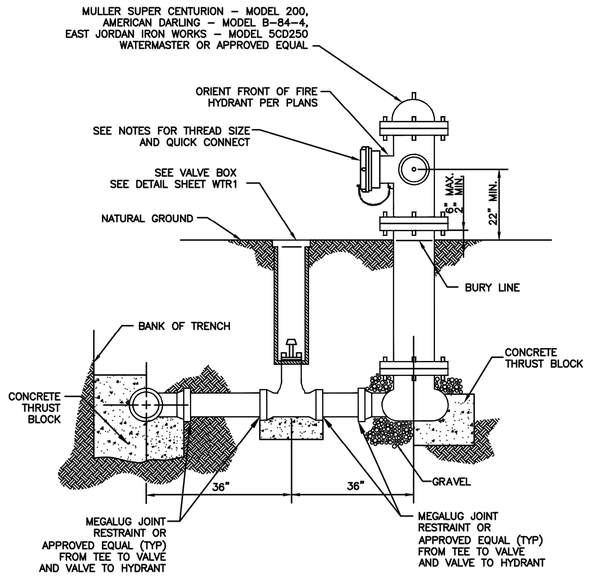


## 1 FIRE HYDRANT

NOTES:

1. PRESSURE TEST OF ALL WATER LINES SHALL BE AT 125 PSI FOR DURATION OF 8 HOURS OR 150 PSI FOR 4 HOURS.
2. FIRE HYDRANT THREAD SIZE: PUMPER CONNECTION 4-492 SIZE=4.492".
3. PROVIDE "UNI-FLANGE" OR APPROVED EQUAL PIPE RESTRAINT AND CASING SYSTEM ON UNDERGROUND PRESSURE PIPE SYSTEMS.
4. FIRE HYDRANT ASSEMBLIES SHALL NORMALLY BE LOCATED THREE FEET BEHIND BACK OF CURB, DEFLECT WATERLINES AS NECESSARY TO MAINTAIN THREE FOOT CLEARANCE. REQUIRED ASSEMBLY SHALL INCLUDE ONE LINE SIZE BY SIX INCH TEE, ONE SIX INCH GATE VALVE AND BOX, ONE FIRE HYDRANT AND SIX INCH LEAD PIPING AND TIE BACKS.
5. ALL CONCRETE THRUST BLOCKING SHALL BE PLACED TO FORM A SOLID CONNECTION BETWEEN FITTINGS, VALVES, AND FIRE HYDRANTS AND UNDISTURBED EARTH. CONCRETE FOR THRUST BLOCKING SHALL HAVE A MINIMUM OF 2500 P.S.I. COMPRESSIVE STRENGTH AT 28 DAYS.
6. INSTALL CONCRETE BLOCK BENEATH FIRE HYDRANTS BEFORE PLACING CONCRETE THRUST BLOCKING TO INSURE THAT FIRE HYDRANTS ARE INSTALLED LEVEL.
7. ALL FIRE HYDRANTS AND VALVE BOXES ARE TO BE ADJUSTED TO FINISH GRADE AFTER PAVING IS COMPLETE.
8. ALL FIRE HYDRANTS ARE TO BE EQUIPPED WITH HYDRA-STORZ QUICK CONNECT HYDRANT SYSTEM (1/4 X 5" BASE) WITH DEBRIS CAP. MANUFACTURED BY HYDRA-SHIELD, INC. OR APPROVED EQUAL. DEBRIS CAP IS TO BE TETHERED WITH A 12" STAINLESS STEEL CABLE, UTILIZING THE EYELET ON THE FIRE HYDRANT AND THE DEBRIS CAP.
9. CONTRACTOR SHALL NOTIFY CITY ENGINEER 48 HOURS BEFORE START OF CONSTRUCTION.
10. ALL FIRE HYDRANT RESTRAINTS TO BE MJ FITTING.

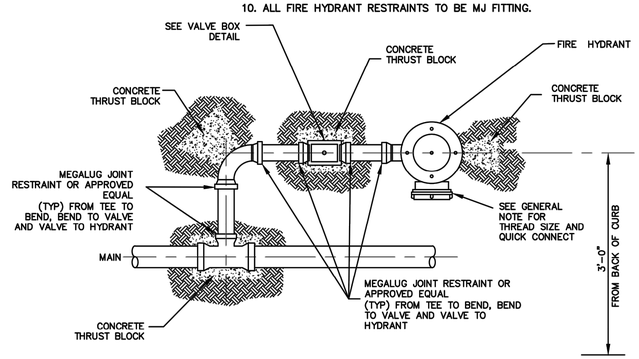


## 4 ALTERNATE FIRE HYDRANT - PLAN

THESE DOCUMENTS ARE FOR INTERIM REVIEW AND ARE NOT INTENDED FOR CONSTRUCTION, BIDDING, OR PERMIT PURPOSES.

MARK E. HAVRAN
TEXAS P.E. NO. 118610
DATE:SEPTEMBER, 2024

| Revision | By | Chk. | Appr. | Date |
|---|---|---|---|---|
| | | | | |

# CITY OF LA MARQUE
# WISTERIA DRAINAGE IMPROVEMENTS

## WATER DETAILS


**LJA Engineering, Inc.**
11821 East Freeway
Suite 360
Houston, Texas 77029
Phone 713.450.1300
Fax 713.450.1385
FRN - F-1386


| | |
|---|---|
| DESIGN: M.E.H. | JOB No. E019-1014 Cont. No. |
| DRAWN: B.A.K. | DATE: SEPTEMBER, 2024 |
| CHECKED: | SCALE: AS SHOWN |
| APPROVED: | SHEET No. 09 Of 12 |

H:\ACAD\Clients\019\1014\Design\019-1014-09 WATER DETAILS.dwg (XREF: 135-044 Border)

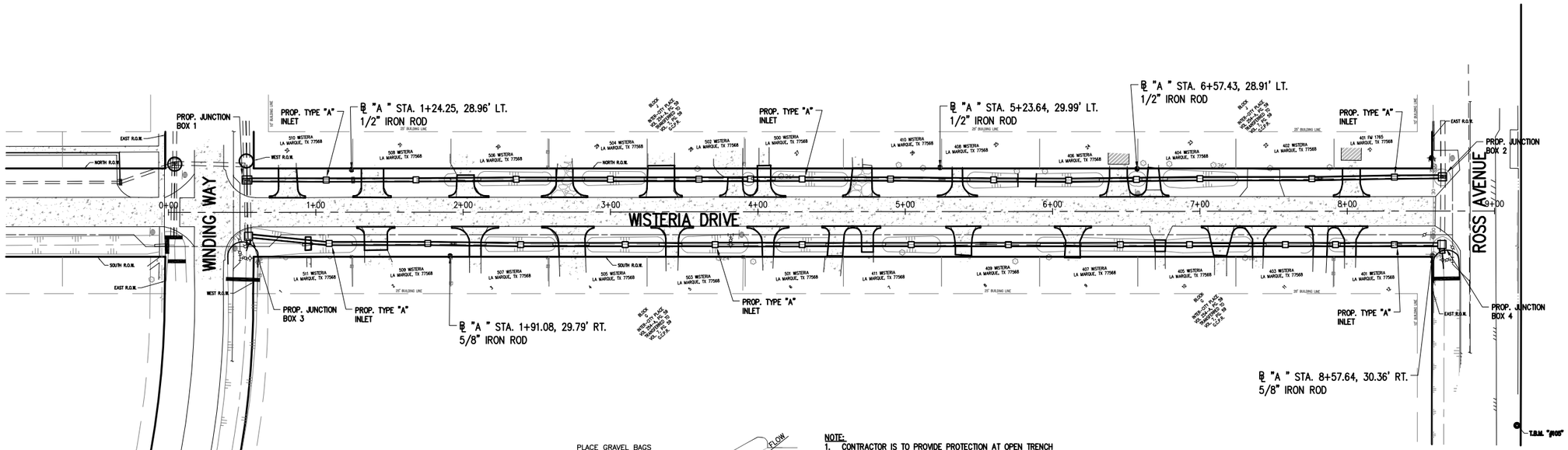


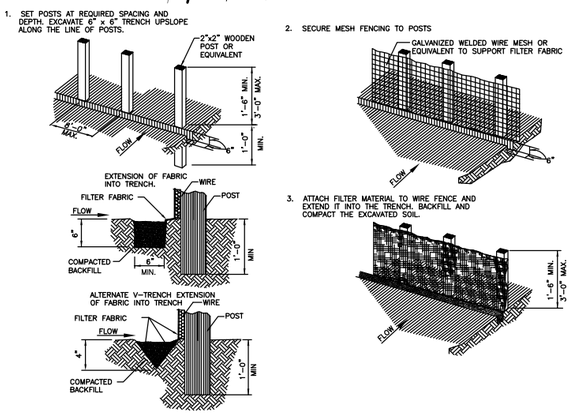


GENERAL NOTES:

1. SECURELY FASTEN MESH FENCING TO POSTS WITH STAPLES OR TIE WIRES.
2. SECURELY FASTEN FILTER FABRIC TO MESH FENCING.
3. WHEN TWO SECTIONS OF FILTER FABRIC ADJOIN EACH OTHER, OVERLAP 6 INCHES AT A POST, FOLD TOGETHER, AND ATTACH TO A POST.
4. REMOVE SEDIMENT DEPOSITS WHEN SILT REACHES ONE-THIRD OF THE HEIGHT OF THE FENCE IN DEPTH.

## REINFORCED FILTER FABRIC BARRIER

SCALE: N.T.S.

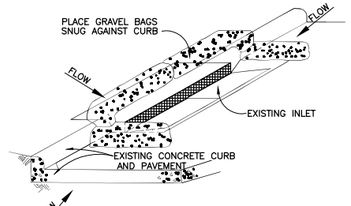


## INLET PROTECTION BARRIERS (GRAVEL BAGS)

N.T.S.

**NOTE:**

1. **CONTRACTOR IS TO PROVIDE PROTECTION AT OPEN TRENCH EXCAVATION AND BORE PITS TO PREVENT SILT RUN-OFF INTO EXISTING STORM SEWERS. FILTER FABRIC FENCING ADJACENT TO EXCAVATION OR GRAVEL BAGS AT INLETS MAY BE USED. INCLUDE COST OF FENCING AND/OR HAY BALES IN PRICE BID FOR MULTIPLE SWPPP ITEMS.**

GENERAL NOTES:

1. GRAVEL BAGS ARE TO BE USED FOR THIS APPLICATION.
2. PROVIDE WOVEN OR UNWOVEN GEOTEXTILE FILTER FABRIC FOR BAGS.
3. PROVIDE COARSE SAND AND AGGREGATE MIX FOR FILL MATERIAL FOR BAGS. USE ONLY PARTICLES CONSISTING OF CLEAN, HARD, DURABLE MATERIALS FREE FROM ADHERENT COATINGS, SALT, ALKALI, DIRT, CLAY, LOAM, SHALE, SOFT OR FLAKY MATERIALS, OR ORGANIC AND INJURIOUS MATTER.
4. REMOVE SEDIMENT DEPOSIT WHEN THE SEDIMENT HAS ACCUMULATED TO ONE-THIRD THE HEIGHT OF THE BARRIER.

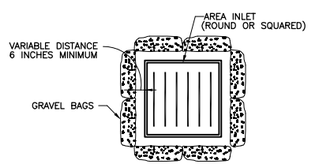


## AREA INLET PROTECTION BARRIER

N.T.S.

ENVIRONMENTAL MITIGATION NOTES:

1. BEST MANAGEMENT PRACTICES: DURING PROJECT CONSTRUCTION, THERE WILL BE SOME INCREASE IN AMBIENT DUST PARTICULATE FROM MACHINERY AND SOIL DISTURBANCES. THESE WILL BE ONLY TEMPORARY IN NATURE AND ALL EFFORTS WILL BE MADE THROUGH PROPER CONSTRUCTION METHODS TO ENSURE DUST CONTROL AND PROPERLY FUNCTIONING EQUIPMENT. PROJECT ENGINEERS SHOULD ENSURE THAT BEST MANAGEMENT PRACTICES ARE USED TO CONTROL RUNOFF FROM CONSTRUCTION SITES TO PREVENT DETRIMENTAL IMPACT TO SURFACE AND GROUND WATER.

2. BEST MANAGEMENT PRACTICES: CONTRACTOR SHALL EMPLOY NATIONWIDE STANDARD CONSERVATION MEASURES SET FORTH BY USFWS. PROVIDE CONSTRUCTION WORKERS WITH A LIST OF FEDERAL THREATENED AND ENDANGERED SPECIES AND STATE LISTED RARE SPECIES. IF CONSTRUCTION WORKERS IDENTIFY OR ENCOUNTER THREATENED OR ENDANGERED SPECIES OR STATE LISTED RARE SPECIES, CONSTRUCTION SHOULD CEASE IMMEDIATELY AND TEXAS PARKS & WILDLIFE SHOULD BE CONTACTED FOR GUIDANCE. AVOID ACTIVITIES REQUIRING VEGETATION REMOVAL OR DISTURBANCE DURING PEAK BIRD NESTING SEASON (MARCH THROUGH AUGUST) TO PREVENT THE DESTRUCTION OF MIGRATORY BIRDS, NESTS, OR eggs. WHEN PROJECT ACTIVITIES CANNOT OCCUR OUTSIDE THE BIRD NESTING SEASON, CONDUCT SURVEYS PRIOR TO SCHEDULED ACTIVITY TO DETERMINE IF ACTIVE NESTS ARE PRESENT WITHIN THE AREA OF IMPACT. IF EVIDENCE OF MIGRATORY BIRDS IS FOUND, A QUALIFIED BIOLOGIST WITH USFWS SHOULD BE NOTIFIED.

3. INADVERTENT DISCOVERY CONDITION: IF HISTORIC PROPERTIES ARE DISCOVERED OR CULTURAL MATERIALS ARE ENCOUNTERED DURING CONSTRUCTION OR DISTURBANCE ACTIVITIES OR UNANTICIPATED EFFECTS ON HISTORIC PROPERTIES ARE FOUND, WORK SHOULD CEASE IN THE IMMEDIATE AREA AND THC'S HISTORY PROGRAMS, THC'S ARCHEOLOGY DIVISION, SHOULD BE CONTACTED TO CONSULT ON FURTHER ACTIONS THAT MAY BE NECESSARY TO PROTECT HISTORIC PROPERTIES OR CULTURAL REMAINS. WORK CAN CONTINUE IN AREAS WHERE NO HISTORIC PROPERTIES ARE PRESENT. THE ALABAMA COUSHATTA TRIBE OF TEXAS RESPONDED WITH THE FOLLOWING COMMENTS: "WHILE WE ARE INTERESTED IN YOUR PROJECT, WE DO NOT HAVE THE RESOURCES TO DEVOTE OUR FULL ATTENTION TO THIS PROJECT OR IT IS OUTSIDE OF OUR CURRENT URGENT NEED SCOPE OF WORK REFERENCE POINT. PLEASE KEEP US ABREAST OF FURTHER WORK OF YOUR ORGANIZATION AS OUR FOCUS MAY CHANGE IN THE FUTURE. WE URGE CAUTION AND CARE IN THE PROTECTION OF NATURAL RESOURCES AND OF ANY HERITAGE ITEMS OF INTEREST YOU MAY DISCOVER. PLEASE LET US KNOW IF THERE IS A DISCOVERY AND IF WE CAN BE OF ASSISTANCE IN THE MATTER."

**BENCHMARK:**
**NATIONAL GEODETIC SURVEY MARKER B-1508 (PID AW5579)**
Steel rod stamped"B1508 1987" The marker is north 128' and east 100' from the centerline intersection of Ross Street and Oak Street.
NORTHING: 13705605.80 EASTING: 3255585.35
ELEV. 14.37 (NAVD 1988)

T.B.M.#105
SW top of bolt on 2.0' dia metal Power Pole (Shown hereon.)
NORTHING: 13708938.47 EASTING: 3256576.88
6.13 (NAVD 1988)

T.B.M.#104
Box cut in concrete (Shown hereon.)
NORTHING: 13708859.55 EASTING: 3255659.68
ELEV. 6.05 (NAVD 1988)

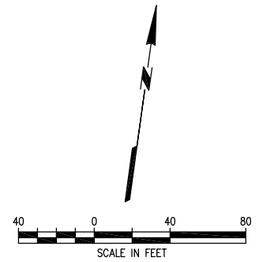


## LEGEND

- INLET PROTECTION BARRIER (GRAVEL BAGS)
- REINFORCED FILTER FABRIC BARRIER
- AREA INLET PROTECTION BARRIER

THESE DOCUMENTS ARE FOR INTERIM REVIEW AND ARE NOT INTENDED FOR CONSTRUCTION, BIDDING, OR PERMIT PURPOSES.
MARK E. HAVRAN
TEXAS P.E. NO. 118610
DATE:SEPTEMBER, 2024

| Revision | By | Chk. | Appr. | Date |
|---|---|---|---|---|
| | | | | |

# CITY OF LA MARQUE
# WISTERIA DRAINAGE IMPROVEMENTS

## STORM WATER POLLUTION PREVENTION PLAN & DETAILS


**LJA Engineering, Inc.**
11821 East Freeway
Suite 360
Houston, Texas 77029
Phone 713.450.1300
Fax 713.450.1385
FRN - F-1386


| | |
|---|---|
| DESIGN: M.E.H. | JOB No. E019-1014 Cont. No. |
| DRAWN: B.A.K. | DATE: DECEMBER, 2024 |
| CHECKED: | SCALE: 1" = 40' |
| APPROVED: | SHEET No. 10 Of 12 |

H:\ACAD\Clients\019\1014\Design\019-1014-10 SWPPP.dwn

09/03/24

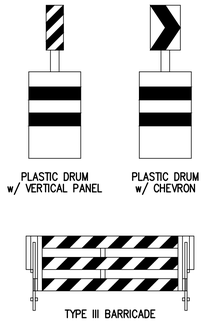


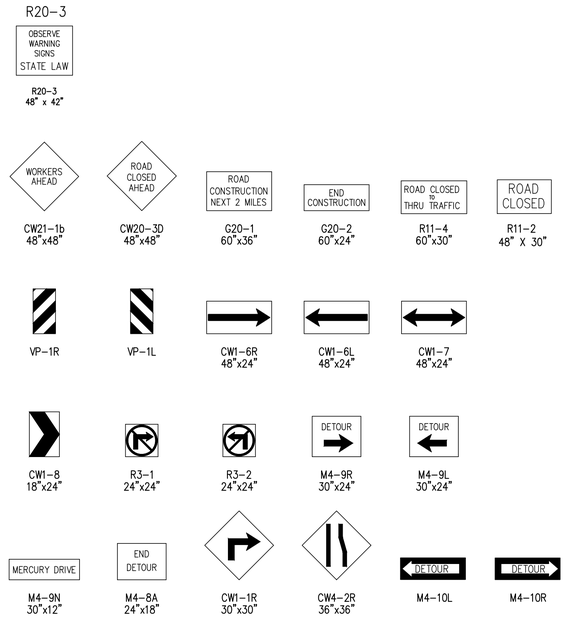


## TRAFFIC NOTES

1. CONTRACTOR SHALL PROVIDE AND INSTALL TRAFFIC CONTROL DEVICES IN CONFORMANCE WITH PART VI OF TEXAS MANUAL ON UNIFORM TRAFFIC CONTROL DEVICES (TMUTCD – LATEST EDITION WITH REVISIONS) DURING CONSTRUCTION.
2. NO LANES SHALL BE BLOCKED FROM 7 A.M. TO 9 A.M. AND 4 P.M. TO 6 P.M. MONDAY THRU FRIDAY.
3. OFF DUTY POLICE OFFICERS/FLAGGERS ARE REQUIRED TO DIRECT TRAFFIC WHEN LANES ARE BLOCKED.
4. CONTRACTOR SHALL COVER THE EXCAVATION WITH STEEL PLATES ANCHORED PROPERLY DURING NON-WORKING HOURS AND ALLOW NORMAL TRAFFIC TO FLOW. **IF COVERING IS NOT FEASIBLE, USE TRANTEX FR 336 EFX 36" DELINEATOR OR APPROVED EQUAL WITH SHEETING AND BASE EPOXIED TO PAVEMENT NEXT TO EXCAVATION DURING NON-WORKING HOURS.**
5. APPROVED COPIES OF "TRAFFIC CONTROL PLANS" SHALL BE AVAILABLE FOR INSPECTION AT ALL TIMES.
6. IF THE CONTRACTOR CHOOSES TO USE A DIFFERENT METHOD OF TRAFFIC CONTROL PLAN DURING THE CONSTRUCTION THAN WHAT IS OUTLINED IN THE CONTRACT DRAWINGS, (S)HE SHALL BE RESPONSIBLE TO PREPARE AND SUBMIT ALTERNATE PLANS* TO TRAFFIC SECTION OF HCPID FOR APPROVAL TEN WORKING DAYS PRIOR TO IMPLEMENTATION.

   ***THESE PLANS SHALL BE DRAWN TO SCALE ON REPRODUCIBLE MYLARS AND SEALED BY A LICENSED ENGINEER IN THE STATE OF TEXAS. PLANS WILL BECOME A PART OF THE CONTRACT DRAWINGS.**
7. IF THE PROJECT IS WITHIN 400 FEET FROM A SIGNALIZED INTERSECTION, THE CONTRACTOR SHALL CONTACT HARRIS COUNTY PUBLIC INFRASTRUCTURE DEPARTMENT, SIGNAL DIVISION, AT 713-881-3210 FIVE (5) WORKING DAYS PRIOR TO THE START OF CONSTRUCTION.

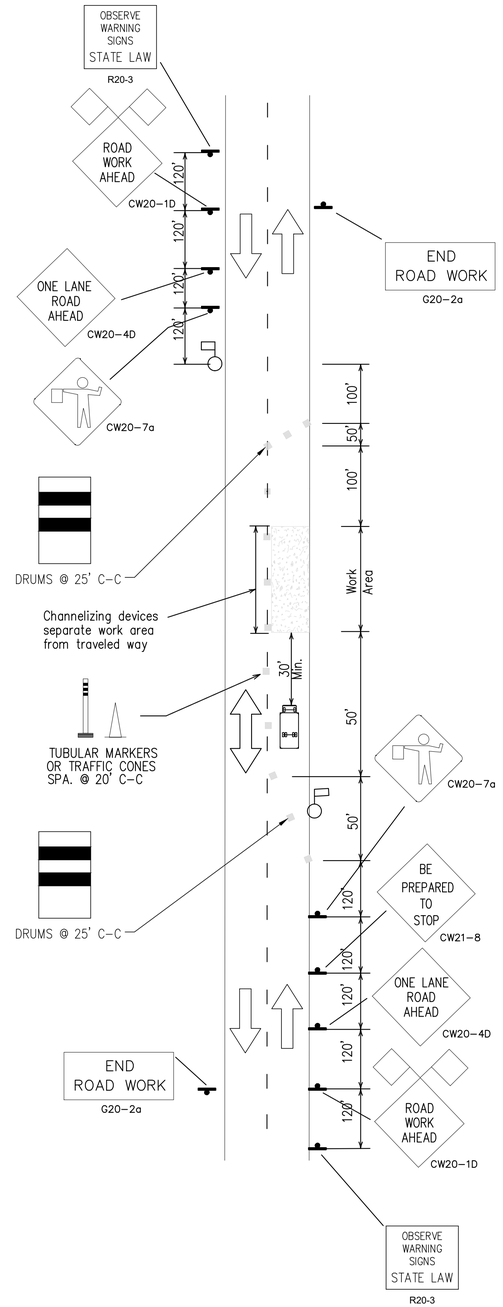


## DAILY WORK AREA

**NOTE:**
WORK TO BE ACCOMPLISHED BY CLOSURE OF 1/2 OF THE ROADWAY IN CONFORMANCE WITH DETAILS FOR "DAILY WORK AREA" AS SHOWN IN THIS SHEET. ROADWAY TO BE REOPENED TO TRAFFIC AT THE END OF EACH WORK DAY. CONTRACTOR WILL BE RESPONSIBLE FOR THE PROVISION AND MAINTENANCE OF PROPER SIGNING, CONSTRUCTION CONES, AND OTHER TRAFFIC CONTROL MEASURES. COORDINATE DAILY WORK AREA WITH HARRIS COUNTY W.C.&I.D. No. 1.

## General Notes

1. WORKERS AHEAD Sign may be installed at two or more locations on the approach to the work zone if visibility or the work zone is less than 1500 feet. Sign R20-3 should preceed all signs.
2. Flaggers should use two-way radios or other method to communicate.
3. Length of work area should be based on the ability of flaggers to communicate.
4. Distance along curve or area of obstruction should be long enough to develop enough time for a motorist to identify and react to flagger signals.

## LEGEND

- CONSTRUCTION AREA
- OPEN TO TRAFFIC
- HEAVY WORK VEHICLE
- FLASHING ARROW BOARD
- SIGN POST
- TUBULAR MARKERS ,CONES OR DRUMS
- FLAGGER

THESE DOCUMENTS ARE FOR INTERIM REVIEW AND ARE NOT INTENDED FOR CONSTRUCTION, BIDDING, OR PERMIT PURPOSES.

MARK E. HAVRAN
TEXAS P.E. NO. 118610
DATE:SEPTEMBER, 2024

| Revision | By | Chk. | Appr. | Date |
|---|---|---|---|---|
| | | | | |

# CITY OF LA MARQUE
# WISTERIA DRAINAGE IMPROVEMENTS

## TRAFFIC CONTROL PLAN
## ROLLING CONSTRUCTION

**LJA Engineering, Inc.**
11821 East Freeway
Suite 360
Houston, Texas 77029
Phone 713.450.1300
Fax 713.450.1385
FRN - F-1386

| | |
|---|---|
| DESIGN: M.E.H. | JOB No. E019-1014 Cont. No. |
| DRAWN: B.A.K. | DATE: SEPTEMBER, 2024 |
| CHECKED: | SCALE: N.T.S. |
| APPROVED: | SHEET No. 11 Of 12 |

H:\ACAD\Clients\019\1014\Design\019-1014-11 TCP Rolling Construction.dwg (XREF: 125-1028 Border)

08/28/24

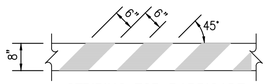


STRIPING FOR BARRICADE

For all types of barricades with rails less than 3'–0" long. Stripes 4" wide shall be used. Identification markings may be shown only on back side of barricade rails.

Striping should cover the full width of the rail striping of rails, panels, etc., should slope downward at an angle of 45 degrees in direction traffic is to pass.

Where a barricade extends entirely across a roadway, it is desirable that the stripes slope downward in the direction which traffic must turn in detouring. When both right and left turns are provided for, the chevron striping may slope downward in both directions from the center of the barricade.

Barricades with stripes which begin at the upper right side and slope downward to the lower left side are to be designated as "Right" (R) Barricades. Barricades with stripes which begin at the upper left side and slope downward to the lower right side are to be designated as "Left" (L) Barricades.

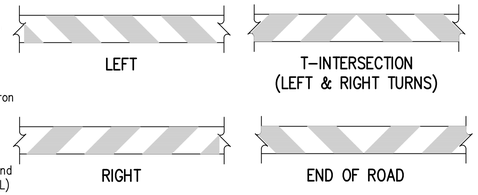


STRIPING DIRECTION DETAILS

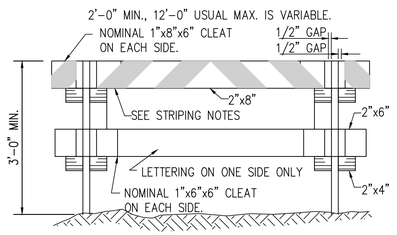


STANDARD DETAIL

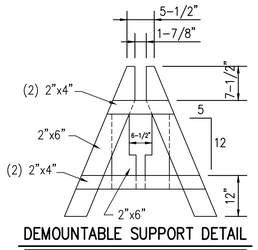


DEMOUNTABLE SUPPORT DETAIL

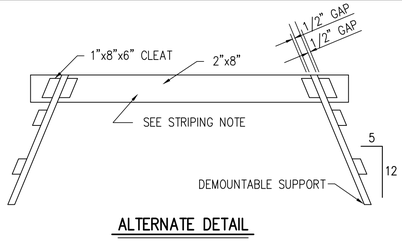


ALTERNATE DETAIL

TYPE I BARRICADE




STANDARD DETAIL

* 3' MAX. WIDTH FOR "A" FRAME CONFIGURATION,
4' & LONGER USE DEMOUNTABLE SUPPORT SHOWN ABOVE.




"A" FRAME SUPPORT DETAIL




ALTERNATE DETAIL

TYPE II BARRICADE

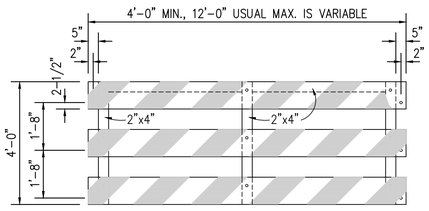


PANEL DETAIL

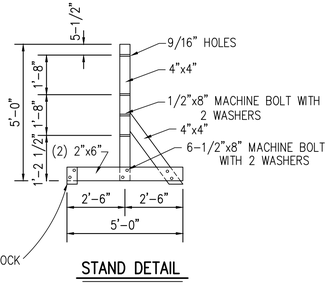


STAND DETAIL

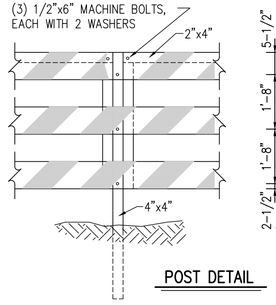


POST DETAIL

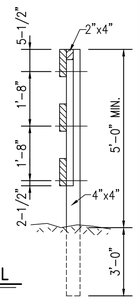


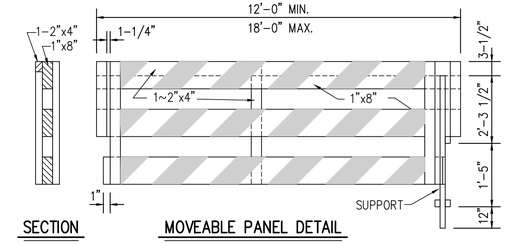


SECTION

MOVEABLE PANEL DETAIL

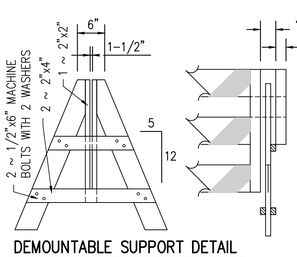


DEMOUNTABLE SUPPORT DETAIL

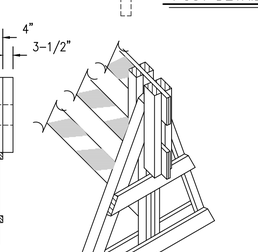


ASSEMBLY DETAIL

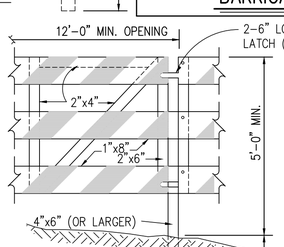


GATE DETAIL

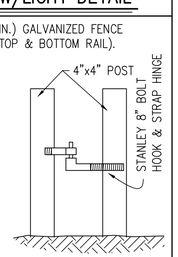


GATE HINGE DETAIL

TYPE III BARRICADE

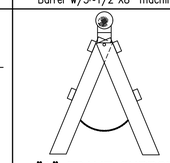


BARRICADE W/LIGHT DETAIL

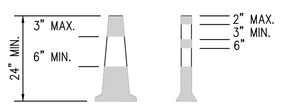


CONES

Traffic cones and tubular markers shall be a minimum of 24 inches in height with a broadened base and may be made of various materials to withstand impact without damage to themselves or to vehicles. Larger sizes should be used on freeways and other roadways where speeds are relatively high or wherever more conspicuous guidance is needed. Orange shall be the predominant color on cones and tubular markers. They should be kept clean and bright for maximum target value. For nighttime use they shall be reflectorized or equipped with lighting devices for maximum visibility. Reflectorized material shall have a smooth, sealed outer surface which will display the same approximate color day and night.

Reflectorization of tubular markers shall be a minimum of two three–inch bands placed a maximum of 2" from the top with a maximum of 6" between the bands. Reflectorization of cones shall be provided by a minimum 6" band placed a maximum of 3" from the top.

Cones or tubular markers are only suitable for temporary usage (up to 8 hours) with other channelization devices such as vertical panels or barricades preferred for longer term usage. Care should be taken to insure that they remain in their proper location and in an upright position.




Wood or Metal panel required under metal drum when set on asphalt pavement unless otherwise directed by the Engineer.

DRUMS

Drums, set on end, and used for traffic warning or channelization shall be approximately 35" in height and minimum of 18" in diameter. The contractor, at his option, may use drums made from steel barrels or black polyethylene plastic drum liners weighing approximately eight pounds each. The markings on drums shall be horizontal, circumferential, reflectorized orange and reflectorized white stripes, 4 to 8 inches wide. The first reflectorized stripe should start within two (2) inches of the top of the drum. There shall be at least two orange and two white stripes on each drum. If there are non–reflectorized spaces between the horizontal orange and white stripes, they shall be no more than 2 inches wide. Metal drums shall be painted black or orange before reflectorized stripes are added. All drums on a project will be the same color. When drums are placed in the roadway, appropriate warning signs should be used. During hours of darkness, a flashing warning light should be placed on drums used singly as a warning device. Steady burn electric lights of channelization should be placed on drums used in series for traffic channelization. Drums shall be weighted with sand.

CWI–8 CHEVRON signs, CWI–6A ARROW signs or VP–1 Vertical Panels mounted above drums may be used as supplements to drum delineation. (Vertical Panels w/ post shall be bolted to Barrel w/3–1/2"X8" machine bolts w/2 washers on 9" spacing.

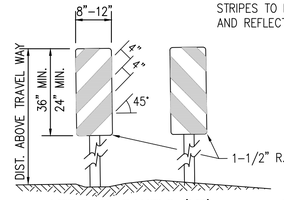


VERTICAL PANELS (VP)

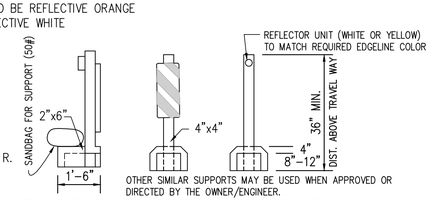


TYPICAL PORTABLE VERTICAL PANEL OR DELINEATOR

Vertical Panels are normally used as channelizing devices to indicate tangent or nearly tangent roadway alignment where good target value of a device is needed in daytime as well as the nighttime. In addition, vertical panels should be used at the edge of shoulder drop–offs and other areas such as lane transitions where positive day and night delineation may be required. Vertical Panels should be mounted back to back if used at the edge of cuts adjacent to two–way two lane roadways. Stripes should allways slope downward toward the traveled way.

# CHANNELIZING DEVICES

## BARRICADE NOTES

The most recent edition of the TEXAS Manual on Uniform Traffic Control Devices (MUTCD), and its revisions, shall govern the construction and use of all items herein described.

Channelizing devices other than barricades should normally be used for channelization purposes.

Barricades should be placed perpendicular to the traffic flow. Other channelizing devices, such as drums, vertical panels or portable barriers, should be used where needed to separate traffic from the work area. In all cases, the barricades should be located to warn and direct traffic.

Barricades may be designed and constructed from wolmanized wood or any other suitable material in a manner approved by the Owner/Engineer. The barricade shown hereon are typical and are suggested details for wood support systems. The details of rail width and striping, number and spacing of rails, minimum length and height (above pavement) of rails must be adhered to, whether or not the alternate designs are used. (See Detail This Sheet).

Barricades are to be constructed in a first–class workmanship manner of clean sound material. All surfaces above ground, which are not striped, shall be white except unpainted galvanized metal or aluminum components. Components made of lumber shall be painted with a minimum of two coats of an approved brand of exterior white paint to secure thorough coverage and a uniform white color.

The reflectorized white and reflectorized orange (reflectorized red) stripes for barricades, drums, and vertical panels shall be constructed of "High intensity sheeting and shall be maintained to meet the appearance, color, and reflectivity requirements set by the MUTCD.

The Contractor shall maintain each barricade in a clean and good condition.

Barricades shall be removed upon completion of the work and/or the elimination of the hazard on any section.

Type I Barricades shall consist of a striped upper horizontal rail mounted on demountable supports at either end and fabricated in such manner that the rail or rails can be assembled or disassembled to or from the supports with ease. The standard Barricade design has a lower rail not required on the alternate design. A Type I Barricade is intended for use where the hazard is relatively small, for minor maintenance and repair work or for the continuous marking of a restricted roadway. Type I rails that are striped on both sides should be striped in opposite directions.

Type II Barricades shall consist of an upper an lower rail fastened to a support. The support should be of an "A" frame configuration, hinged or otherwise fastened at the top to permit convenient folding and stacking for transporting from one work site to another. Since portability is a prime consideration, the materials chosen for the barricades should be as light weight as possible and structurally sound. Sandbags should be used for ballast when required. A Type II Barricade is intended for use where the area is quite confined such as on city streets, or the continuous marking of a restricted roadway, or for temporary daytime use.

Type III Barricades should consist of three striped horizontal rails and assembled as a panel for mounting to posts or skids. Type III Barricades are typically permanent in nature and are required to function in one location for a relatively long time. When the Type III (Moveable) Barricades are constructed on bases or skids instead of posts set into the ground, it may be desirable to ballast the bases with sandbags to provide added resistance to overturning during periods of high winds.

An orange flag may be mounted on Type I, Type II and Type III Barricades for increased daytime emphasis. For night time use, it is desirable to add flashing warning light when barricades are used singly and a steady burn light when barricades are used in a series for channelization.

### CONSTRUCTION OF BARRICADES

The barricades may be fixed or moveable, depending on the location and application.

Movable barricades are appropriate where the construction or maintenance operations are of short duration, and/or are progressively shifted along a roadway. The design of movable mounting must be such as to resist overturning by ordinary strong winds or by chance contact with vehicles. Fixed barricades are justified only for major construction or reconstruction.

Movable Type III Barricades are generally of heavy construction with a heavy base.

BARRICADE CHARACTERISTICS

| TYPE | I | II | III |
|---|---|---|---|
| WIDTH OF RAIL | 8 IN. MIN. – 12 IN. MAX. | 8 IN. MIN. – 12 IN. MAX. | 8 IN. MIN. – 12 IN. MAX. |
| LENGTH OF RAIL | 2 FT. MIN. – VARIABLE MAX. | 2 FT. MIN. – VARIABLE MAX. | 2 FT. MIN. – VARIABLE MAX. |
| WIDTH OF STRIPES * | 6 IN. | 6 IN. | 6 IN. |
| HEIGHT | 3 FT. MIN. | 3 FT. MIN. | 3 FT. MIN. |
| NUMBER OF REFLECTORIZED RAIL FACES | 2 (ONE EACH DIRECTION) | 4 (TWO EACH DIRECTION) | 3 (IF FACING TRAFFIC IN ONE DIRECTION) OR 6 (IF FACING TRAFFIC IN TWO DIRECTIONS) |

FOR WOODEN BARRICADES, NOMINAL LUMBER DIMENSIONS WILL BE SATISFACTORY.

* FOR RAILS LESS THAN 3 FT. LONG, 4 IN. WIDE STRIPES MAY BE USED.

THESE DOCUMENTS ARE FOR INTERIM REVIEW AND ARE NOT INTENDED FOR CONSTRUCTION, BIDDING, OR PERMIT PURPOSES.

MARK E. HAVRAN
TEXAS P.E. NO. 118610
DATE:SEPTEMBER, 2024

| Revision | By | Chk. | Appr. | Date |
|---|---|---|---|---|
| | | | | |

**CITY OF LA MARQUE**
**WISTERIA DRAINAGE IMPROVEMENTS**

**STANDARD BARRICADE DETAILS**


**LJA Engineering, Inc.**
11821 East Freeway
Suite 360
Houston, Texas 77029
Phone 713.450.1300
Fax 713.450.1385
FRN - F-1386


| | |
|---|---|
| DESIGN: M.E.H. | JOB No. E019–1014 Cont. No. |
| DRAWN: B.A.K. | DATE: SEPTEMBER, 2024 |
| CHECKED: | SCALE: N.T.S. |
| APPROVED: | SHEET No. 12 Of 12 |

H:\ACAD\Clients\019\1014\Design\019-1014-12 STD BAR.dwg (XREF: 135-0440 Border)

09/03/24

# CITY OF LA MARQUE

**GALVESTON COUNTY, TEXAS**

**CONTRACT DOCUMENTS AND TECHNICAL SPECIFICATIONS FOR CONSTRUCTION OF**

# WISTERIA DRAINAGE IMPROVEMENTS

**LJA PROJECT NO. E019-1014**

**DECEMBER, 2024**

STATE OF TEXAS
MARK E. HAVRAN
118610
LICENSED PROFESSIONAL ENGINEER

**COPYRIGHT BY**
**LJA ENGINEERING, INC.**
**11821 EAST FREEWAY, SUITE 360**
**HOUSTON, TEXAS 77029**
**FIRM REGISTRATION NO. F-1386**

**CITY OF LA MARQUE**

**GALVESTON COUNTY, TEXAS**

**CONTRACT DOCUMENTS AND TECHNICAL SPECIFICATIONS**

**FOR CONSTRUCTION OF**

# WISTERIA DRAINAGE IMPROVEMENTS

**LJA PROJECT NO. E019-1014**

**DECEMBER, 2024**

# TABLE OF CONTENTS


| | |
|---|---|
| I | INVITATION TO BIDDERS |
| II | INSTRUCTIONS TO BIDDERS |
| II-A | CDBG – INSTRUCTIONS TO BIDDERS FOR CONSTRUCTION |
| III | BID FORM |
| IV | STANDARD FORM OF AGREEMENT BETWEEN OWNER AND CONTRACTOR |
| V | PERFORMANCE BOND |
| VI | PAYMENT BOND |
| VII | LABOR CLASSIFICATION AND MINIMUM WAGE SCALE |
| VII-A | TEXAS WORKERS' COMPENSATION |
| VIII | STANDARD GENERAL CONDITIONS OF THE CONSTRUCTION CONTRACT |
| VIII-A | CDBG – GENERAL CONDITIONS FOR CONSTRUCTION CONTRACTS |
| IX | SUPPLEMENTARY CONDITIONS OF AGREEMENT |

X SECTION 3 POLICY

X-A STATEMENT OF BIDDER'S QUALIFICATIONS

X-B NON-COLLUSION AFFIDAVIT OF PRIME BIDDER

X-C CERTIFICATION OF BIDDER REGARDING CIVIL RIGHTS LAWS AND REGULATIONS

X-D CERTIFICATION REGARDING LOBBYING

X-E DISCLOSURE OF LOBBYING ACTIVITIES AND INSTRUCTIONS

X-F MINORITY/FEMALE GOALS AND TIMETABLES

X-G HUD-4010 FEDERAL LABOR STANDARDS PROVISIONS

X-H TITLE 29 – LABOR

X-I CONCERNING LABOR STANDARDS AND PREVAILING WAGE REQUIREMENTS

X-J PROJECT-SPECIFIC GENERAL WAGE DECISION

X-K TDA – TEMPORARY SIGNAGE REQUIREMENTS

X-L REQUIRED CONTRACT PROVISIONS

X-M CERTIFICATE OF INTERESTED PARTIES FORM 1295 AND INSTRUCTIONS

X-N CONFLICT OF INTEREST QUESTIONNAIRE

X-O CONTRACTOR'S LOCAL OPPORTUNITY PLAN

X-P CERTIFICATE OF LIABILITY INSURANCE

X-Q SECTION 504 CERTIFICATION

X-R CERTIFICATE OF CONSTRUCTION COMPLETION (COCC)

X-S FINAL PAYMENT AFFIDAVIT

X-T ENVIRONMENTAL MITIGATION MEASURES

X-U SAMPLE CHANGE ORDER FORM

## XI TECHNICAL SPECIFICATIONS

| Item | Title |
|---|---|
| 1400 | Measurement and Payment |
| 1401 | Demolition of Abandoned Facilities |
| 1533 | Barricades, Signs and Traffic Handling |
| 1541 | Trench Safety Systems |
| 1567 | Source Control-Erosion and Sedimentation |
| 2107 | Turf Establishment |
| 2210 | Site Grading |
| 2220 | Structural Excavation and Backfill |
| 2221 | Excavation Trenching and Backfilling for Utilities |
| 2223 | Crushed Limestone Bedding |
| 2227 | Waste Material Disposal |
| 2232 | Cement Stabilized Base |
| 2234 | Flexible Base |
| 2242 | Cement Stabilized Subgrade |
| 2245 | Lime-Stabilized Subgrade |
| 2401 | Dewatering and Drainage of Excavation |
| 2500 | Storm Sewers |
| 2513 | Hot-Mix Asphaltic Concrete Pavement |
| 2515 | Concrete Pavement |
| 2555 | Water Piping |
| 2566 | Utilities Separation Distances |
| 3051 | Concrete Structures |
| 3200 | Concrete Reinforcement |
| 3310 | Concrete |
| 3312 | Cement-Stabilized Sand Backfill |
| 3314 | Compacted Sand Fill Under Structures |
| 3604 | Non-Shrink Grout |
| 5501 | Miscellaneous Metal |
| 15061 | Steel Piping and Fittings |
| 15062 | Ductile Iron Pipe and Fittings |

**SPECIAL PROVISIONS**

Special Provision No. 1 to General Conditions

# I

# INVITATION TO BIDDERS

# I

## INVITATION TO BIDDERS

Sealed Bids, in duplicate, addressed to The Mayor and City Council, City of La Marque, La Marque, Texas, Galveston County, will be received at City Hall, 1111 Bayou Road, La Marque, Texas, 77568 until 10:00 A.M. Thursday, February 6, 2025, and then publicly opened and read in the City Council Chambers, 1109-B Bayou Road, La Marque, Texas for furnishing all labor, material, and equipment and performing all work required for the construction of **"Wisteria Drainage Improvements".**

BIDS will be submitted in sealed envelopes upon the blank forms provided and marked in the upper left-hand corner "Bid for Construction of **Wisteria Drainage Improvements**" to be opened at 10:00 A.M. Thursday, February 6, 2025. BIDS received after closing time will be returned unopened.

All Bids shall be accompanied by a cashier's or certified check upon a national or state bank in the amount of five percent (5%) of the total maximum bid price payable without recourse to the City of La Marque, La Marque, Texas, or a bid bond in the same amount from a reliable surety company, as a guarantee that bidder will enter into a Contract. The notice of award of Contract shall be given by the Owner within sixty (60) days following the opening of bids. Checks submitted as bid security will be returned to the respective bidders within ten (10) days after bids are opened, except checks, or bonds, which the Owner elects to hold until the successful bidder has executed the Contract. Thereafter, the remaining checks, including security of successful bidder, will be returned within five (5) days. Remaining bid bonds will not be returned unless requested by Bidder.

The successful bidder must furnish Performance Bond and Payment Bond upon the forms which are attached hereto in the amount of one hundred (100%) percent of the contract price within 15 days after receipt of the contract documents. Payment and performance bonds shall be issued from sureties with a minimum "A" or "A-" rating from Best's Key Rating Guide and who are licensed by the Texas Department of Insurance to do business in Texas and to issue said bonds. The bonds must be signed by an authorized representative of the surety and licensed by the State Board of Insurance.

Secure Plans and Specifications from LJA Engineering, Inc., at https://bids.lja.com for One Hundred Dollars ($100.00 non-refundable plus cost of delivery) ($50.00 for electronic copy) for each set of documents, which sum will not be refunded. A printed set can be picked up at LJA Engineering, Inc. East Houston Office, 11821 East Freeway, Suite 360, Houston, Texas 77029

Plans and/or Exhibits and Specifications may be examined at the following locations:

City of La Marque
City Hall
1111 Bayou Road
La Marque, Texas 77568

(409) 938-9200

| | |
|---|---|
| LJA Engineering, Inc.<br>East Houston Office<br>11821 East Freeway, Suite 360<br>Houston, Texas 77029 | (713) 450-1300<br>https://bids.lja.com |
| ConstructConnect<br>Attn: Nicholas Johnson<br>3825 Edwards Rd.<br>Suite 800<br>Cincinnati, OH 45209 | (800) 364-2059 |
| Dodge Data & Analytics<br>2860 S. State Hwy 161<br>Suite 160 #501<br>Grand Prairie, TX 75052-7361 | (800) 393-6343 |
| Associated General Contractors of Texas<br>2400 Augusta, Suite 305<br>Houston, Texas 77057 | (713) 334-7100 |
| Amtek Plan Room<br>9000 Hempstead Rd. Suite 130<br>Houston, Texas 77008 | (713) 254-7983 |

In conformance with applicable statutes, the general prevailing wage rates in the locality in which the work is to be performed have been ascertained, and such rates shall be the minimum paid for labor employed upon this project.

The Owner reserves the right to reject any or all bids and to waive informalities in bidding. In case of ambiguity or lack of clearness in stating the prices in any bid, the Owner reserves the right to consider the most advantageous construction thereof, or to reject the bid. The award will be made to the responsible bidder submitting the lowest acceptable bid.

A **Mandatory Pre-Bid Conference** for prospective bidders, suppliers, etc., will be held on Thursday, January 30, 2025 at 10:00 A.M., at City Council Chambers, 1109-B Bayou Road, La Marque, Texas 77568 in accordance with the Instructions to Bidders, Paragraph 21.

City of La Marque
Kierra Nance
City Clerk

# II

# INSTRUCTIONS TO BIDDERS

**The City may not accept this bid until it has received from the bidder a completed and signed TEC Form 1295 complete with a certificate number assigned by the Texas Ethics Commission ("TEC"), pursuant to Texas Government Code § 2252.908 and the rules promulgated thereunder by the TEC. The undersigned understands that failure to provide said form complete with a certificate number assigned by the TEC will result in a non-conforming bid and will prohibit the City from considering this bid for acceptance.**

II

## INSTRUCTIONS TO BIDDERS

1. Texas Ethics Commission Form 1295.

   HOUSE BILL 1295. Provision of Texas Ethics Commission Form 1295 ("TEC Form 1295") pursuant to Texas Government Code § 2252.908 (the "Interested Party Disclosure Act" or the "Act"): Unless bidder is exempt from such requirements pursuant to Texas Government Code Section2252.908(c)(4), the City may not award the contract to a bidder unless the bidder has provided to the City a completed and signed TEC Form 1295 which has been assigned a certificate number by the Texas Ethics Commission (the "TEC"). Pursuant to the rules prescribed by the TEC, the TEC Form 1295 must be completed online through the TEC's website, assigned a certificate number, printed, signed, and provided to the City. For purposes of completing the TEC Form 1295, the entity's name is **City of La Marque**; the contract ID number is **E019-1014**; and the description of goods and services is **Wisteria Drainage Improvements**. Neither the City nor its consultants have the ability to verify the information included in a TEC Form 1295, and neither have an obligation nor undertake responsibility for advising any bidder with respect to the proper completion of the TEC Form 1295. **ALL BIDDERS MUST SUBMIT THEIR TEC FORM 1295 WITH THEIR BID.**

2. Defined Terms

   Terms used in these Instructions to Bidders which are defined in the Standard General Conditions of the Construction Contract, EJCDC C-700 (2007 edition) have the meanings assigned to them in the General Conditions. The term "Successful Bidder" means the lowest, qualified, responsible Bidder to whom Owner (on the basis of Owner's evaluation as hereinafter provided) makes an award.

3. Copies of Bidding Documents

   3.1 Complete sets of the Bidding Documents in the number and for the deposit sum, if any, stated in the Invitation to Bidders may be obtained from Engineer (unless another issuing office is designated in the Advertisement or Invitation to Bid). The deposit will not be refunded to Bidders.

   3.2 Complete sets of Bidding Documents shall be used in preparing Bids; neither Owner nor Engineer assumes any responsibility for errors or misinterpretations resulting from the use of incomplete sets of Bidding Documents.

   3.3 Owner and Engineer in making copies of Bidding Documents available on the above terms do so only for the purpose of obtaining Bids on the Work and do not confer a license or grant for any other use.

4. Qualification of Bidder

4.1 Child Support Enforcement Requirements

Under Section 231.006 of the Texas Family Code,
- a sole proprietorship in which the sole proprietor is a delinquent child support obligor;
- a partnership in which a partner is a delinquent child support obligor;
- a corporation in which a majority shareholder is a delinquent child support obligor; or
- an other entity in which a substantial owner is a delinquent child support obligor are not eligible to bid on or receive state contract.

"Child support obligor" is a person who is obligated by court order or written repayment agreement to pay child support. A "Delinquent child support obligor" is a child support obligor who is 30 days or more delinquent in paying child support. A "substantial owner of another entity" is an entity other than a sole proprietorship, partnership, or corporation.

4.2 To demonstrate qualifications to perform the Work, each Bidder must be prepared to submit within 5 days of Owner's request written evidence of the types set forth in the Supplementary Conditions, such as financial data, previous experience and evidence of authority to conduct business in the jurisdiction where the Project is located. Each Bid must contain evidence of Bidder's qualification to do business in the state where the Project is located or covenant to obtain such qualification prior to award of the Contract.

5. Examination of Contract Documents and Site

5.1 Before submitting a Bid, each Bidder must (a) examine the Contract Documents thoroughly, (b) visit the site to familiarize himself with local conditions that may in any manner affect cost, progress or performance of the Work, (c) familiarize himself with federal, state, and local laws, ordinances, rules and regulations that may in any manner affect cost, progress or performance of the Work, and (d) study and carefully correlate Bidder's observations with the Contract Documents.

5.2 Bidders Responsibility - Bidders are required to inform themselves of the conditions under which the work is to be performed and all other factors that might affect the manner or method of work. The Owner does not make any representations as to the conditions under which the work is to be performed. The Bidder, if awarded the contract, shall not be allowed any extra compensation by reason of any condition which affects the work if such condition could have been discernible by the Bidder prior to the bidding.

5.3 Reference is made to the Supplementary Conditions for the identification of those reports of investigations and tests of subsurface and latent physical conditions at the site or otherwise affecting cost, progress or performance of the Work which have been relied upon by Engineer in preparing the Drawings or Specifications. Owner will make copies of such reports available to any Bidder requesting them. These reports are not guaranteed as to accuracy or completeness, nor are they part of the Contract Documents. Before submitting his Bid, each Bidder will, at his own expense, make such additional investigations and tests as the Bidder may deem necessary to determine his Bid for performance of the Work in accordance with the

time, price and other terms and conditions of the Contract Documents.

5.4 On request, Owner will provide each Bidder access to the site to conduct such investigations and tests as each Bidder deems necessary for submission of his Bid.

5.5 The lands upon which the Work is to be performed, rights-of-way for access thereto and other lands designated for use by Contractor in performing the Work are identified in the Supplementary Conditions, General Requirements or Drawings.

5.6 The submission of a Bid will constitute an incontrovertible representation by the Bidder that he has complied with every requirement scope and detail to indicate and convey understanding of all terms and conditions for performance of the Work.

6. Interpretations

All questions about the meaning or intent of the Contract Documents shall be submitted to Engineer in writing. Replies will be issued by Addenda mailed or delivered to all parties recorded by Engineer as having received the Bidding Documents. Questions received less than five (5) days prior to the date for opening of Bids will not be answered. Only questions answered by formal written Addenda will be binding. Oral and other interpretations or clarifications will be without legal effect.

7. Bid Security

7.1 Bid Security shall be made payable to Owner, in amount of two (2%) percent of the Bidder's maximum Bid price and in the form of a certified or bank check or a Bid Bond issued by a Surety meeting the requirements of Paragraph 5.02 of the General Conditions.

7.2 The Bid Security of the Successful Bidder will be retained until such Bidder has executed the Agreement and furnished the required Contract Security, whereupon it will be returned; if the successful Bidder fails to execute and deliver the Agreement and furnish the required Contract Security within 15 days of the Notice of Award, Owner may annul the Notice of Award and the Bid Security of that Bidder will be forfeited. The Bid Security of any Bidder whom Owner believes to have a reasonable chance of receiving the award may be retained by Owner until the earlier of the tenth day after the "effective date of the Agreement" (which term is defined in the General Conditions) by Owner to Contractor and the required Contract Security is furnished or the sixty-first day after the Bid opening. Remaining security of checks or cashier's checks will be returned to the respective bidders within ten (10) days after bids are opened. Bid bonds will not be returned unless requested by Bidder.

8. Contract Time

The number of days within which, or the date by which, the Work is to be completed (the Contract Time) is set forth in the Bid Form and will be included in the Agreement.

9. Liquidated Damages

Provisions for liquidated damages, if any, are set forth in Article 3.2., Standard Form of Agreement Between Owner and Contractor.

10. Substitute Material and Equipment

The Contract, if awarded, will be on the basis of material and equipment described in the Drawings or specified in the Specifications without considerations of possible substitute or "or-equal" items. Whenever it is indicated in the drawings or specified in the Specifications that a substitute or "or-equal" item of material or equipment may be furnished or used by Contractor if acceptable to Engineer, application for such acceptance will not be considered by Engineer until after the "effective date of the Agreement." The procedure for submittal of any such application by Contractor and consideration by Engineer is set forth in Paragraphs 6.05 of the General Conditions.

11. Subcontractors, Etc.

11.1 If the Supplementary Conditions require the identity of certain Subcontractors and other persons and organizations to be submitted to Owner in advance of the Notice of Award, the apparent Successful Bidder, and any other Bidder so requested, will within seven days after the day of the Bid opening submit to Owner a list of all Subcontractors and other persons and organizations (including those who are to furnish the principal items of material and equipment) proposed for those portions of the Work as to which such identification is so required. Such list shall be accompanied by an experience statement with pertinent information as to similar projects and other evidence of qualification for each such Subcontractor, person and organization if requested by Owner. If Owner or Engineer after due investigation has reasonable objection to any proposed Subcontractor, other person or organization, either may before giving the Notice of Award request the apparent Successful Bidder to submit an acceptable substitute without an increase in Bid price. If the apparent Successful Bidder declines to make any such substitution, the Contract shall not be awarded to such Bidder, but his declining to make any such substitution will not constitute grounds for sacrificing his Bid Security. Any Subcontractor, other person or organization so listed and to whom Owner or Engineer does not make written objection prior to the giving of the Notice of Award will be deemed acceptable to Owner and Engineer.

11.2 No Contractor shall be required to employ any Subcontractor, other person, or organization against whom he has reasonable objection.

12. Bid Form

12.1 The Bid Form is attached hereto; additional copies may be obtained from Engineer.

12.2 Bid Forms must be completed in ink or by typewriter. The Bid price of each item on the form must be stated in words and numerals; in case of a conflict, words will take precedence.

12.3 Bids by Corporations must be executed in the corporate name by the president or a

vice-president (or other corporate officer accompanied by evidence of authority to sign) and the corporate seal must be affixed and attested by the secretary or an assistant secretary. The corporate address and state of incorporation shall be shown below the signature.

12.4 Bids by partnerships must be executed in the partnership name and signed by a partner, whose title must appear under the signature and the official address of the partnership must be shown below the signature.

12.5 All names must be typed or printed below the signature.

12.6 The Bid shall contain an acknowledgment of receipt of all Addenda (the numbers of which shall be filled in on the Bid Form).

12.7 The address to which communications regarding the Bid are to be directed must be shown.

12.8 The Bid Form includes supplemental pay items to facilitate payment for charges and alterations that may be required to complete work. Quantities have been established for Supplemental Items shown on Section III, the Bid Form. Contractor is to bid unit prices and provide extension of unit prices and quantities for total amount bid. The actual work as provided by the General Provisions, Technical Specifications, and shown on Plans and/or Exhibits is described in the Bid Form items other than supplemental pay items. When work covered by supplemental items is requested by Owner or Contractor and approved by Engineer, payment will be based on the quantity actually constructed and unit prices bid in Bid Form. Award will be based on Total Amount Bid.

13. Submission of Bids

Bids shall be submitted at the time and place indicated in the Invitation to Bidders and shall be included in an opaque sealed envelope, marked with the Project title and name and address of the bidder and accompanied by the Bid Security and other required documents. If the Bid is sent through the mail or other delivery system, the sealed envelope shall be enclosed in a separate envelope with the notation “BID ENCLOSED” on the face thereof.

14. Modification and Withdrawal of Bids

14.1 Bids may be modified or withdrawn by an appropriate document duly executed (in the manner that a Bid must be executed) and delivered to the place where Bids are to be submitted at any time prior to the opening of Bids.

14.2 If within twenty-four hours after Bids are opened, any Bidder files a duly signed written notice with Owner and promptly thereafter demonstrates to the reasonable satisfaction of Owner that there was a material and substantial mistake in the preparation of his Bid, that Bidder may withdraw his Bid and the Bid Security will be returned. Thereafter, that Bidder will be disqualified from further bidding on the Work.

15. Opening of Bids - Bids will be Opened Publicly

When Bids are opened publicly they will be read aloud, and an abstract of the amounts of the base Bids and major alternates (if any) will be made available after the date of Bid openings.

16. Bids to Remain Open

All Bids shall remain open for sixty days after the day of the Bid opening, but Owner may, in his sole discretion, release any Bid and return the Bid Security prior to that date.

17. Award of Contract

17.1 Owner reserves the right to reject any and all Bids, to waive any and all informalities and to negotiate contract terms with the Successful Bidder, and the right to disregard all nonconforming, non-responsive or conditional Bids. Discrepancies between words and figures will be resolved in favor of words. Discrepancies between the indicated sum of any column of figures and the correct sum thereof will be resolved in favor of the correct sum.

17.2 In evaluating Bids, Owner shall consider the qualifications of the Bidders, whether or not the Bids comply with the prescribed requirements and alternates and unit prices if requested in the Bid forms. It is Owner's intent to accept alternates (if any are accepted) in the order in which they are listed in the Bid form but Owner may accept them in any order or combination.

17.3 Owner may consider the qualifications and experience of Subcontractors and other persons and organizations (including those who are to furnish the principal items of material or equipment) proposed for those portions of the Work as to which the identity of Subcontractors and other persons and organizations must be submitted as provided in the Supplementary Conditions. Operating costs, maintenance considerations, performance data and guarantees of materials and equipment may also be considered by Owner.

17.4 Owner may conduct such investigations as he deems necessary to assist in the evaluation of any Bid and to establish the responsibility, qualifications and financial ability of the Bidders, proposed Subcontractors and other persons and organizations to do the Work in accordance with the Contract Documents to Owner's satisfaction within the prescribed time.

17.5 Owner reserves the right to reject the Bid of any Bidder who does not pass any such evaluation to Owner's satisfaction.

17.6 If the Contract is to be awarded, it will be awarded to the lowest responsible Bidder whose evaluation by Owner indicates to Owner that the award will be in the best interests of the Project.

17.7 If the Contract is to be awarded, Owner will give the Successful Bidder a Notice of Award within sixty days after the day of the Bid opening.

17.8 Funds: The Owner has available sufficient funds to pay the Contractor in cash, in

accordance with the provisions of the Contract.

18. Performance and Other Bonds

Paragraph 5.01 of the General Conditions and the Supplementary Conditions set forth Owner's requirements as to performance and other Bonds. When the Successful Bidder delivers the executed Agreement to Owner it shall be accompanied by the required Contract Security.

19. Signing of Agreement

When Owner gives a Notice of Award to the Successful Bidder, it will be accompanied by at least three unsigned counterparts of the Agreement and all other Contract Documents attached. Within ten days thereafter Owner will deliver all fully signed counterparts to Contractor. Engineer will identify those portions of the Contract Documents not fully signed by Owner and Contractor and such identification shall be binding on all parties.

20. Special Requirements

20.1 Preparation of Bids: Unless otherwise directed in the Invitation of Bidders, bids shall be submitted in duplicate upon the forms provided, or copies thereof. The bids shall be prepared in compliance with the requirements of the Invitation to Bidders, these instructions, and any instructions printed on the prescribed forms. All blank spaces on the Bid Forms shall be filled in as noted, in ink or typed, with both words and figures; amounts shall be extended and totaled, and no change shall be made in the phraseology of the forms or of the bid items thereon. In case of discrepancy between the written amount and the figures, the written amounts will be used. If optional items are shown on the Bid form, and the Bidder elects not to bid on these optional items, then "No Bid" must be entered in the blank spaces provided. Any bid may be deemed irregular which contains any omission, alteration, erasure, addition, or change of any nature, or which does not include prices for each and every bid item (excluding optional items). Further, any bid in which the prices are obviously unbalanced, or which fails in any manner to conform to the bidding procedures as set forth, shall also be considered irregular. A Bidder may withdraw his bid before the time of closing by submitting a written request for its withdrawal to the person who holds the bid. In order to ensure consideration, the bid must be enclosed in a sealed envelope which is clearly marked with the notation "Bid Enclosed" and further identified by the name and number of the project. Unless directed otherwise in the Invitation and to Bidders, the bid shall be addressed to the Owner.

20.2 Subsurface Information: Any information provided in regard to subsurface data, test borings, etc., is to be considered approximate. Any soils report that the Engineer has obtained will be provided to the Bidders for their use. The interpretation of soils information, results of soil borings, etc., is in no way guaranteed.

20.3 Open Specifications: Where equipment or materials are specified by a trade or brand name, it is not the intention of the Owner to discriminate against an equal product of another manufacturer, but rather to set a definite standard of quality and/or performance; and to establish an equal basis for the evaluation of bids. Where the words "equivalent", or "equal to" are used, they shall be understood to

mean that the thing referred to shall be the equivalent of or equal to, in the opinion or judgment of the Engineer, the product or item specified by name. Unless otherwise specified, all materials shall be the best of their respective kinds and shall be, in all cases, fully equivalent to approved samples. Notwithstanding that the words “equivalent”, “equal to”, or other such expressions may be used in the specifications in connection with a material, manufactured article or process, the material, article, or process, specifically designated shall be used, unless a substitute shall be approved in writing by the Engineer. The Engineer has the right to require the use of such specifically designated materials, articles, or processes.

20.4 Price of Materials and Sales Tax: The Contractor is responsible for compliance with all current State Laws and Provisions of the State Comptroller’s office on price of materials and sales tax. The Owner is a tax-exempt organization and materials which become the property of the Owner upon acceptance of contract may be provided without tax if the Contractor maintains proper records and procedures.

21. **Mandatory Pre-Bid Conference**

A **Mandatory Pre-Bid Conference** between the Owner, Engineers, Prospective Bidders, Suppliers, and others will be held to discuss the scope of the Work and to answer questions concerning the Work. No addendum will be issued at this conference, but an addendum will be issued afterwards, if necessary, to answer questions. The **Mandatory Pre-Bid Conference** will be held on Thursday, January 30, 2025 at 10:00 A.M. local time at City of La Marque, Council Chambers, 1109-B Bayou Road, La Marque, Texas, 77568. No bid will be accepted by Owner if Bidder fails to attend the **Mandatory Pre-Bid Conference**.

# II-A

# CDBG - INSTRUCTIONS TO BIDDERS FOR CONSTRUCTION

# Instructions to Bidders for Construction

*Updated from TDA July 2022 Appendix F: Sample Construction Bid Packet*

1. Use of Separate Bid Forms

These contract documents include a complete set of bid and contract forms which are for the convenience of the bidders and are not to be detached from the contract document, completed or executed. Separate bid forms are provided for your use.

2. Interpretations or Addenda

No oral interpretations will be made to any bidder. Each request for clarification shall be made in writing to the Grant Recipient or engineer no less than seven (7) days prior to the bid opening. Each interpretation made will be in the form of an Addendum to the contract documents and will be distributed to all parties holding contract documents no less than seven (7) days prior to the bid opening. It is, however, the bidder's responsibility to make inquiry as to any addenda issued. All such addenda shall become part of the contract documents and all bidders shall be bound by such addenda, whether or not received by the bidders.

If an addendum to the bid package is necessary, it must be distributed to each potential bidder. The distribution of an addendum shall be verified either by statements of receipt or registered/certified mail receipts, which shall be included in the public works construction file. The addendum shall allow adequate time for consideration in bid preparation (usually at least one week). If adequate time is not available, the bid opening date must be extended and the Grant Recipient must republish the invitation for bids containing the place, time, and date for the new bid opening. Note that any change to the original bid opening date will require republication of the invitation for bids at least once in a locally published newspaper. The republished notice will include the place, time and date for the new bid opening and must be published at least seven days prior to the new bid opening date.

3. Inspection of Site

Each bidder should visit the site of the proposed work and should become acquainted with the existing conditions and facilities, the difficulties and restrictions pertaining to the performance of the contract. The bidder should thoroughly examine and become familiar with the drawings, technical specifications and all other contract documents. The contractor by the execution of the contract shall in no way be relieved of any obligation under it due to failure to receive or examine any form or legal document or to visit the site or the conditions existing at the site. The City/ County will be justified in rejecting any claim based on lack of inspection of the site prior to the bid.

4. Alternate bid items

No alternate bids or bid items will be considered unless they are specifically requested by the technical specifications.

5. Bids

   a. All bids must be submitted on the forms provided and are subject to all requirements of the Contract Documents, including the Drawings.

b. All bids must be regular in every respect and no interlineation, excisions or special conditions may be made or included by the bidder.

c. Bid documents, including but not limited to the bid, the bid bond(s), the contractor's certifications, local opportunity plan, and the statement of the bidder's qualifications, shall be sealed in an envelope and clearly labeled with the words "Bid Documents", the project number, name of bidder and the date and time of bid opening.

d. The City / County may consider as irregular any bid on which there is an alteration of or departure from the bid form and, at its option, may reject any irregular bid.

e. If a contract is awarded, it will be awarded to a responsible bidder on the basis of the lowest/best bid and the selected alternate bid items, if any. The contract will require the completion of the work in accordance with the contract documents.

6. Bid Modifications Prior to Bid Opening

a. Any bidder may modify its bid by submitting a modification or supplemental bid at any time prior to the scheduled closing time for receipt of bids, provided such modification or supplemental bid is received by the locality prior to the closing time. The modification or supplemental bid should not reveal the original bid price but should provide only the addition, subtractions or other modifications to the original bid so that the final prices or terms will not be known by the locality until the sealed bid is open.

7. Bid Bond

a. A bid bond in the amount of 5% of the bid issued by an acceptable surety shall be submitted with each bid [for contracts greater than $100, 000,]. A certified check or bank draft payable to the locality or negotiable U.S. Government Bonds (as par value) may be submitted in lieu of the Bid Bond.

b. The bid bond or its comparable will be returned to the bidder as soon as practical after the opening of the bids.

8. Statement of Bidders Qualifications

Each bidder shall submit on the form furnished for that purpose a statement of the bidder's qualifications. The Grant Recipient shall have the right to take such steps as it deems necessary to determine the ability of the bidder to perform its obligations under the contract, and the bidder shall furnish the Grant Recipient all such information and data for this purpose as it may request. The right is reserved to reject any bid where an investigation of the available data does not satisfy the Grant Recipient that the bidder is qualified to carry out properly the terms of the contract.

9. Unit Price

The unit price for each of the several items in the bid shall include its pro rata share of overhead so that the sum of the products obtained by multiplying the quantity shown for each item by the unit price bid represents the total bid. Any bid not conforming to this requirement may be rejected as informal. Special

attention is drawn to this condition, as the unit prices will be used to determine the total bid price and the amount of any change orders resulting from an increase or decrease in quantities.

10. Corrections

Erasures or other corrections in the bid must be noted over the signature of the bidder.

11. Time for Receiving Bids

Bids received prior to the advertised hour of opening shall be kept securely sealed. The officer appointed to open the bids shall decide when the specified time has arrived and no bid received thereafter will be considered; except that when a bid arrives by mail after the time fixed for opening, but before the reading of all other bids is completed, and it is shown to the satisfaction of the Grant Recipient that the late arrival of the bid was solely due to delay in the mail for which the bidder was not responsible, such bid will be received and considered.

12. Opening of Bids

The City/County shall, at the time and place fixed for the opening of bids, open each bid and publicly read it aloud, irrespective of any irregularities therein. Bidders and other interested individuals may be present.

13. Withdrawal of Bids

Bidder may withdraw the bid before the time fixed for the opening of bids, by communicating its purpose in writing to the Grant Recipient. Upon receipt of such notice, the unopened bid will be returned to the bidder. The bid guaranty of any bidder withdrawing his bid will be returned promptly.

14. Award of Contract/Rejection of Bids

a. The contract will be awarded to the responsive, responsible Bidder submitting the lowest/best bid. The bidder selected will be notified at the earliest possible date. The locality reserves the right to reject any or all bids and to waive any informality in bids received where such rejection or waiver is in its interest.

b. The Grant Recipient reserves the right to consider as unqualified to do the work any bidder who does not habitually perform with his own forces the major portions of the work involved in construction of the improvements embraced in this contract.

15. Execution of Agreement/Performance and Payment Bonds

a. Performance Bonds - Requires all prime contractors which enter into a formal contract in excess of $100,000 with the State, a county, or a municipality; a department, board, or agency of the state, a county, or a municipality; and a school district or a subdivision thereof, to obtain a Performance Bond in the amount of the contract before commencing with work
b. Payment Bonds- Requires all prime contractors which enter into a formal contract with the State, a county, or a municipality; a department, board, or agency of the state, a county, or

a municipality; and a school district or a subdivision thereof, to furnish to the governmental entity a payment bond in the amount of the contract. The payment bond must be filed within 30 days from the date of the Notice of Award:

- Municipalities: If the contract is in excess of $50,000, a payment bond is required.
- Counties: If the contract is in excess of $25,000, a payment bond is required.

c. The failure of the successful bidder to execute the agreement and supply the required bonds within thirty (30) days from the date of the notice of award-or within such extended period as the locality may grant, shall constitute a default and the locality may, at its option, either award the contract to the next lowest responsible bidder, or re-advertise for bids. In either case, the locality may charge against the bidder the difference between the amount of the bid, and the amount for which a contract is subsequently executed irrespective of whether this difference exceeds the amount of the bid bond. If a more favorable bid is received through re-advertisement, the defaulting bidder shall have no claim against the locality for a refund.

16. Wages and Salaries

Attention is particularly called to the requirement of paying not less than the prevailing Davis Bacon Related Acts (DBRA) wage rates specified in the Contract Documents. These rates are minimums to be paid during the life of the contract. It is therefore the responsibility of the Bidder to inform themselves as to local labor conditions.

17. Equal Employment Opportunity

Attention is called to the requirements for ensuring that employees and applicants for employment are not discriminated against because of race, color, religion, sex, sexual identity, gender identity, or national origin, and other civil rights requirements.

18. Certification Regarding Lobbying –

Contractors who apply or bid for an award of $100,000 or more shall provide the required certification that it will not and has not used Federal appropriated funds to pay any person or organization for influencing or attempting to influence an officer of employee of any agency, a member of Congress, officer or employee of Congress, or an employee of a member of Congress in connection with obtaining a Federal contract, grant or any other award covered by 31 USC § 1352.

# III

# BID FORM

III
BID FORM

To: The Mayor and City Council of the City of La Marque, Galveston County, Texas, for the Construction of "**Wisteria Drainage Improvements**".

The undersigned, as bidder, declares that the only person or parties interested in this proposal as principals are those named herein, that this proposal is made without collusion with any other person, firm or corporation; that he has carefully examined the Invitation to Bidders, the Instructions to Bidders, this Bid Form, the Agreement, the General Conditions, the Special Provisions, the Supplementary Conditions, the Technical Specifications, and the Plans therein referred to and has carefully examined the locations, conditions, and classes of materials of the proposed work; and agrees that he will provide all necessary labor, machinery, tools, apparatus, and other items incidental to construction, and will do all the work and furnish all the materials called for in the Contract and Specifications in the manner prescribed herein and according to the requirements of the Engineer as therein set forth.

It is understood that the following quantities of work to be done at unit prices are approximate only, and are intended principally to serve as a guide in evaluating bids. It is further understoon that all items of work for which there are no specific pay items are included in the bid items shown on this Bid Form.

It is further agreed that the quantities of work to be done at unit prices and materials to be furnished may be considered necessary, in the opinion of the Engineer, to complete the work fully as planned and contemplated, and that all quantities of work, whether increased or decreased are to be performed at the unit prices set forth below except as provided for in the specifications.

It is further agreed that lump sum prices may be increased to cover additional work ordered by the Engineer, but not shown on the Plans and/or Exhibits or required by the specifications, in accordance with the provisions of the General Conditions. Similarly, they may be decreased to cover deletion of work so ordered.

It is understood and agreed that the work is to be complete in full within **One Hundred Twenty (120)** calendar days after the date stated in the work order on which work is to be commenced.

Accompanying this Bid Form is a Certified or Cashier's Check or Bidder's Bond in an amount of at least five percent (5%) of the maximum amount bid, payable to the Owner for _____Dollars ($_____).

Usual disposition of bid securities is cited in paragraph 3 of Section I, Invitation to Bidders and paragraph 7.2 of Section II, Instructions to Bidders; however, if bidder whose bid is accepted by Owner fails to execute the Agreement and/or fails to execute a performance bond and a payment bond within fifteen days after its acceptance, the bid security shall become the property of the Owner, and shall be considered as payment for damages due to delay and other inconveniences suffered by the Owner on account of such failure of the bidder. Further, should the Owner bring suit in court to enforce any terms of this bid, it is agreed that the bidder or his surety shall pay to the Owner his cost and reasonable attorney's fees. It is understood that the Owner reserves the right to reject any and all bids.

**BID FORM**

| ITEM NO. | DESCRIPTION | APPROX. QTY. | UNITS | UNIT PRICE IN WORDS | UNIT PRICE | TOTAL AMOUNT |
|---|---|---|---|---|---|---|
| **BASE BID ITEMS** | | | | | | |
| 1 | Existing Driveway Excavation, Complete in Place | 720 | SY | _____Dollars_ _____Cents | $_____ | $_____ |
| 2 | Embankment for Fill Purposes, Placement and Compaction to 95% Standard Procter Density, Complete in Place. | 2,110 | CY | _____Dollars_ _____Cents | $_____ | $_____ |
| 3 | Lime for 8-Inch Stabilized Sub-Grade (6% by Dryweight), Complete in Place (40 lb/sy) | 4 | TON | _____Dollars_ _____Cents | $_____ | $_____ |
| 4 | 8-Inch Stabilized Sub-Grade (Manipulation), Complete in Place | 715 | SY | _____Dollars_ _____Cents | $_____ | $_____ |
| 5 | 6-Inch Reinforced Concrete Pavement for Driveways (Minimum 5.5 Sacks per Cubic Yard), Complete in Place | 715 | SY | _____Dollars_ _____Cents | $_____ | $_____ |
| 6 | 36-Inch Reinforced Concrete Pipe, ASTM C-76, Class III, Complete in Place | 5 | LF | _____Dollars_ _____Cents | $_____ | $_____ |
| 7 | 24-Inch Reinforced Concrete Pipe, ASTM C-76, Class III, Complete in Place | 882 | LF | _____Dollars_ _____Cents | $_____ | $_____ |

| ITEM NO. | DESCRIPTION | APPROX. QTY. | UNITS | UNIT PRICE IN WORDS | UNIT PRICE | TOTAL AMOUNT |
|---|---|---|---|---|---|---|
| 8 | 24-Inch Arch Reinforced Concrete Pipe, ASTM C-76, Class III, Complete in Place | 757 | LF | _____Dollars_ _____Cents | $_____ | $_____ |
| 9 | Junction Box 1 Per Detail, Complete in Place | 1 | EA | _____Dollars_ _____Cents | $_____ | $_____ |
| 10 | Junction Box 2 Per Detail, Complete in Place | 1 | EA | _____Dollars_ _____Cents | $_____ | $_____ |
| 11 | Junction Box 3 Per Detail, Complete in Place | 1 | EA | _____Dollars_ _____Cents | $_____ | $_____ |
| 12 | Junction Box 4 Per Detail, Complete in Place | 1 | EA | _____Dollars_ _____Cents | $_____ | $_____ |
| 13 | Remove Existing Culverts (36-Inch or Less), Complete in Place | 940 | LF | _____Dollars_ _____Cents | $_____ | $_____ |
| 14 | Type "A" Inlet Per Detail, Complete in Place | 27 | EA | _____Dollars_ _____Cents | $_____ | $_____ |
| 15 | Regrade Existing Ditch to Flowline as Specified in Plans, Complete In Place | 40 | LF | _____Dollars_ _____Cents | $_____ | $_____ |

| ITEM NO. | DESCRIPTION | APPROX. QTY. | UNITS | UNIT PRICE IN WORDS | UNIT PRICE | TOTAL AMOUNT |
|---|---|---|---|---|---|---|
| 16 | Traffic Control Plan, Complete in Place | 1 | LS | _____Dollars_ _____Cents | $_____ | $_____ |
| 17 | Trench Safety System, Complete in Place | 1,644 | LF | _____Dollars_ _____Cents | $_____ | $_____ |
| 18 | Turf Establishment, Full Sodding, Complete in Place | 915 | SY | _____Dollars_ _____Cents | $_____ | $_____ |
| 19 | SWPPP, Area Inlet Protection Barrier, Installed, Maintained, And Removed, Complete in Place | 2 | EA | _____Dollars_ _____Cents | $_____ | $_____ |
| 20 | SWPPP, Reinforced Filter Fabric Fence, Installed, Maintained, And Removed, Complete in Place | 70 | LF | _____Dollars_ _____Cents | $_____ | $_____ |
| | | | | **TOTAL AMOUNT BASE BID ITEMS** | _____ (Items 1 thru 20) | |
| **SUPPLEMENTARY ITEMS** | | | | | | |
| 21 | "Extra" Bank Sand, As Directed by Owner's Representative, Complete in Place | 100 | CY | _____Dollars_ _____Cents | (Minimum Bid $15.00 per Cubic Yard) $_____ | $_____ |

| ITEM NO. | DESCRIPTION | APPROX. QTY. | UNITS | UNIT PRICE IN WORDS | UNIT PRICE | TOTAL AMOUNT |
|---|---|---|---|---|---|---|
| 22 | "Extra" Crushed Limestone Bedding, As Directed by Owner's Representative, Complete in Place | 50 | CY | _____Dollars_ _____Cents | (Minimum bid $30.00 per Cubic Yard) $_____ | $_____ |
| 23 | "Extra" Cement Stabilized Sand, 2.0 Sacks per Ton, As Directed by Owner's Representative, Complete in Place | 350 | TON | _____Dollars_ _____Cents | (Minimum Bid $35.00 per Ton) $_____ | $_____ |
| 24 | "Extra" Class A Concrete, As Directed by Owner's Representative, Complete in Place | 300 | CY | _____Dollars_ _____Cents | (Minimum bid $100.00 per Cubic Yard) $_____ | $_____ |
| 25 | "Extra" Reinforcing Steel, As Directed by Owner's Representative, Complete in Place | 300 | LB | _____Dollars_ _____Cents | (Minimum Bid $2.00 per Pound) $_____ | $_____ |
| 26 | Surface Restoration, Concrete Surface, As Directed by Owner's Representative, Complete in Place | 100 | SY | _____Dollars_ _____Cents | (Minimum Bid $75.00 per Square Yard) $_____ | $_____ |
| 27 | Turf Establishment, Hydromulch Seeding, As Directed by Owner's Representative, Complete in Place | 0.5 | AC | _____Dollars_ _____Cents | (Minimum Bid $3,500.00 per Acre) $_____ | $_____ |

| ITEM NO. | DESCRIPTION | APPROX. QTY. | UNITS | UNIT PRICE IN WORDS | UNIT PRICE | TOTAL AMOUNT |
|---|---|---|---|---|---|---|
| | | | | | (Minimum Bid $70.00 per Linear Foot) | |
| 28 | 8-Inch Waterline (PVC, AWWA C-900, DR-18) with Ductile Iron Fittings, Open Cut, Joint Restraints (as necessary), Including Sections of Ductile Iron (AWWA C-151, Class 350) (as necessary) and Offsets as Shown on Plans, All Depths, As Directed by Owner's Representative, Complete in Place | 50 | LF | _____Dollars_ _____Cents | $_____ | $_____ |
| | | | | | (Minimum Bid $2,500.00 per Each) | |
| 29 | 8" Insertion Valve (AWWA) with Adjustable Box, Joint Restraint (as necessary), Accessories, Concrete Collar, As Directed by Owner's Representative, Complete in Place | 1 | EA | _____Dollars_ _____Cents | $_____ | $_____ |
| | | | | | (Minimum Bid $3,000.00 Per Each) | |
| 30 | 8-Inch Gate Valve (AWWA) with Adjustable Box, Joint Restraint (as necessary), Accessories, Concrete Collar, As Directed by Owner's Representative, Complete in Place | 1 | EA | _____Dollars_ _____Cents | $_____ | $_____ |
| | | | | | (Minimum Bid $5,500.00 per Each) | |
| 31 | Remove Existing Fire Hydrant and Replace with Fire Hydrant Assembly, With Restrained Joints, 4-Foot Bury, Concrete Collar, Thrust Block, As Directed by Owner's Representative, Complete in Place | 1 | EA | _____Dollars_ _____Cents | $_____ | $_____ |

| ITEM NO. | DESCRIPTION | APPROX. QTY. | UNITS | UNIT PRICE IN WORDS | UNIT PRICE | TOTAL AMOUNT |
|---|---|---|---|---|---|---|
| 32 | Construct New Polyethylene Tubing Service Connection (2-Inch or Smaller), Short Side, Including Tap, Pipe, Valves, and Connection to Meter, As Directed by Owner's Representative, Complete in Place | 14 | EA | _____Dollars_ _____Cents | (Minimum Bid $700.00 per Each) $_____ | $_____ |
| 33 | Construct New Polyethylene Tubing Service Connection (2-Inch or Smaller), Long Side, Auger Beneath Road, Including Tap, Pipe, Valves, and Connection to Meter, As Directed by Owner's Representative, Complete in Place | 12 | EA | _____Dollars_ _____Cents | (Minimum Bid $800.00 per Each) $_____ | $_____ |
| 34 | Sign Relocation and Relocate, As Directed by Owner's Representative, Complete in Place | 4 | EA | _____Dollars_ _____Cents | (Minimum Bid $125.00) $_____ | $_____ |
| 35 | Concrete Storm Manhole (4-Foot Diameter), As Directed by Owner's Representative, Complete in Place | 1 | EA | _____Dollars_ _____Cents | (Minimum Bid $3,500.00) $_____ | $_____ |

**TOTAL AMOUNT SUPPLEMENTARY ITEMS** _____
(Items 21 thru 35)

| ITEM NO. | DESCRIPTION | APPROX. QTY. | UNITS | UNIT PRICE IN WORDS | UNIT PRICE | TOTAL AMOUNT |
|---|---|---|---|---|---|---|
| **ALTERNATE BID ITEMS** | | | | | | |
| 36 | 18-Inch HP Storm Pipe, Pipe Conforms to TxDOT SS Item 4122, AASHTO M330, ASTN F2881 Type S, Complete in Place | LF | 1514 | _____Dollars_ _____Cents | $_____ | $_____ |
| 37 | 24-Inch HP Storm Pipe, Pipe Conforms to TxDOT SS Item 4122, AASHTO M330, ASTN F2881 Type S, Complete in Place | LF | 882 | _____Dollars_ _____Cents | $_____ | $_____ |

**TOTAL AMOUNT ALTERNATE BID ITEMS** _____
(Items 36 thru 37)

**BID SUMMARY**

**TOTAL AMOUNT BASE BID ITEMS** _____
(Items 1 thru 20)

**TOTAL AMOUNT SUPPLEMENTARY BID .ITEMS** _____
(Items 21 thru 35)

**TOTAL AMOUNT ALTERNATE BID ITEMS** _____
(Items 36 thru 37)

**TOTAL AMOUNT BASE BID, SUPPLEMENTAL, AND ALTERNATE BID ITEMS** _____
(Items 1 thru 37)

Company: _____

Signed: _____

By: _____

Print Name & Title: _____

ATTEST: _____
(Seal, if Bidder is Corporation)

Mailing Address _____

City and State Zip _____

Delivery Address _____

City and State Zip _____

Telephone Number _____

FAX Number _____

E-Mail Address _____

SUBSTITUTIONS:

1. _____
(Add) (Deduct)
_____ $ _____

2. _____
(Add) (Deduct)
_____ $ _____

3. _____
(Add) (Deduct)
_____ $ _____

In the event of the award of a contract to the undersigned, the undersigned will furnish a performance bond for the full amount of the contract, to secure proper compliance with the terms and provisions of the contract, to insure and guarantee the work until final completion and acceptance, and will furnish a payment bond in the same amount to guarantee payment of all lawful claims for labor performed and materials furnished in the fulfillment of the contract. The work proposed to be done shall be accepted when fully complete and finished in accordance with the Plans and/or Exhibits and Specifications to the satisfaction of the Engineer.

The undersigned certified that the bid prices contained in this bid form have been carefully checked and are submitted as correct and final.

Note: Unit and lump sum prices must be shown in words and figures for each item listed in this proposal, and in the event of discrepancy, the words shall control. Should bid prices on any items be ommited, the right is reserved to apply the lowest prices submitted by any other bidders for the omitted items in payment for work done under this proposal.

Receipt is hereby acknowledged of the following addenda to the contract documents:

Addendum No. 1 Dated _____ Received _____

Addendum No. 2 Dated _____ Received _____

Addendum No. 3 Dated _____ Received _____

"Under Texas Family Code, Section 231.006 a sole proprietorship, corporation, or other entity in which a sole proprietor, partner, a majority shareholder of a corporation or an owner of 10% or more of an other business entity is 30 days or more delinquent in paying child support under a court order or a written repayment agreement is not eligible to bid on or receive a state contract." To comply with Section 231.006, the affidavit below must be signed by the person who is authorized to sign and submit a bid, and thereby bind the bidder, and it must be returned with the bid. A failure to do so will result in the disqualification of the bid.

"I, _____ am authorized to sign this bid on behalf of
(Name and Title)

_____, a _____
(Name and Title) (insert type of business, i.e., sole proprietorship, partnership, corporation, or other)

I certify that no _____
(insert sole proprietor for sole proprietorhsip, or partner for a partnership, or majority shareholder for a corporation, or 10% or more owner for entity)

is 30 days or more delinquent in child support payment required by court order or written repayment agreement."

_____ _____
(Date) (Signature)

Given under my hand and seal of office this _____ day of _____, A.D. 20___.

_____
Notary Public in and for

_____ County, Texas

# IV

# STANDARD FORM OF AGREEMENT BETWEEN OWNER AND CONTRACTOR

**IV**

**STANDARD FORM OF AGREEMENT**
**BETWEEN OWNER AND CONTRACTOR**

This Agreement is dated as of the _____ day of _____ in the year 20__ by and between the City of La Marque (hereinafter called Owner) and _____, (hereinafter called Contractor). Owner and Contractor in consideration of the mutual covenants hereinafter set forth, agree as follows:

Article 1. WORK

Contractor shall complete all Work as specified or indicated in the Contract Documents. The Work is generally described as follows:

Demolition of driveways to remove existing culverts and inlets, filling of existing ditches, and installation of new storm sewer and inlets along the street.

The Project for which the Work under the Contract Documents may be the whole or only a part is generally described as follows:

Removal of existing culverts and ditches to install new storm sewer along the road.

Article 2. ENGINEER

The Project has been designed by LJA Engineering, Inc., East Houston Office, 11821 East Freeway, Suite 360, Houston, Texas 77029, who is hereinafter called Engineer and who is to act as Owner's Representative, assume all duties and responsibilities and will have the rights and authority assigned to Engineer in the Contract Documents in connection with completion of the Work in accordance with the Contract Documents.

Article 3. CONTRACT TIME

3.1 The Work will be substantially completed within One Hundred Ten (110 ) Calendar Days after the date when the Contract Time commences to run as provided in Paragraph 2.03 of the General Conditions, and completed and ready for final payment in accordance with Paragraph 14.07 of the General Conditions within One Hundred Twenty (120) Calendar Days after the date when the Contract Time commences to run.

3.2 Liquidated Damages. Owner and Contractor recognize that time is of the essence in this Agreement and that Owner will suffer financial loss if the Work is not completed within the time specified in Paragraph 3.1 above, plus any extensions thereof allowed in accordance with Article 12 of the General Conditions. They also recognize the delays, expense

and difficulties involved in proving the actual loss suffered by Owner if the Work is not completed on time. Accordingly, instead of requiring any such proof, Owner and Contractor agree that as liquidated damages for delay (not as a penalty) Contractor shall pay Owner Five Hundred ($ 500.00) for each day that expires after the time specified in Paragraph 3.1 for substantial completion until the Work is substantially complete.

After Substantial Completion, if Contractor shall neglect, refuse or fail to complete the remaining Work within the time specified in Paragraph 3.1 for completion and readiness for final payment or any proper extension thereof granted by Owner, Contractor shall pay Owner Five Hundred ($ 500.00) for each day that expires after the time specified in Paragraph 3.1 for completion and readiness for final payment.

## Article 4. CONTRACT PRICE

4.1 Owner shall pay Contractor for completion of the Work in accordance with the Contract Documents an amount in current funds equal to the sum of the amounts determined pursuant to Section III Bid Form.

TOTAL OF AMOUNT BID_____

_____

(use words)

$_____(dollars)

As provided in Paragraph 11.03 of the General Conditions estimated quantities are not guaranteed, and determinations of actual quantities and classification are to be made by Engineer as provided in Paragraph 9.08 of the General Conditions. Unit prices have been computed as provided in Paragraph 11.03.B of the General Conditions. Unit prices specified as per lump sum have been computed in accordance with Paragraph 11.02 of the General Conditions.

## Article 5. PAYMENT PROCEDURES

Contractor shall submit Applications for Payment in accordance with Article 14 of the General Conditions. Applications for Payment will be processed by Engineer as provided in the General Conditions.

5.1 *Progress Payments; Retainage:* Owner shall make progress payments on account of the Contract Price on the basis of Contractor's Applications for Payment as recommended by Engineer, on or about the 30th day of each month during construction as provided in Paragraphs 5.1.1. and 5.1.2. below. All such payments will be measured by the schedule of values established in Paragraph 2.07 of the General Conditions (and in the case of Unit Price Work based on the number of units completed) or, in the event there is no schedule of values, as provided in the General Requirements.

5.1.1 Prior to Substantial Completion: Progress payments will be made equal to the percentage of work completed, as established above, and materials and/or

equipment not incorporated into the work completed but delivered, suitably stored, and accompanied by suitable documentation satisfactory to the Owner as provided in Paragraph 14.2 of the General Conditions. Progress payments will be made less retainage as indicated in Paragraph 5.1.2 below, but in each case, less the aggregate of payments previously made and less such amounts as the Engineer shall determine, or Owner may withhold, in accordance with Paragraph 14.02.B.5 of the General Conditions.

5.1.2 Retainage Prior to Substantial Completion: If the total Contract Price at the time of Contract Execution is Four Hundred Thousand Dollars ($400,000.00) or more, the agreed retainage until Substantial Completion will be five percent (5%), otherwise the agreed retainage until Substantial Completion will be ten percent (10%).

5.1.3 Retainage After Substantial Completion: On projects where a long period of time is expected to occur between the Substantial Completion and final acceptance, retainage may be reduced at the discretion of the Engineer with agreement from the Owner. The reduced retainage will not ever be less than the expected value of any work requiring correction or unfinished work. A portion of the retainage must always be held, under Section 17.183 of the Water Code, until issuance of the Certificate of Acceptance.

5.2 *Final Payment:* Upon final completion and acceptance of the Work in accordance with Paragraph 14.07.B1 of the General Conditions, Owner shall pay the remainder of the Contract Price as recommended by Engineer as provided in said Paragraph 14.07.B.1

## Article 6. INTEREST

All moneys except retainage not paid when due as provided in Article 14 of the General Conditions shall bear interest at the maximum rate allowed by law at the place of the Project.

## Article 7. CONTRACTOR'S REPRESENTATIONS

In order to induce Owner to enter into this Agreement Contractor makes the following representations:

7.1 Contractor has examined and carefully studied the Contract Documents (including the Addenda listed in Article 8) and the other related data identified in the Documents including "technical data."

7.2 Contractor has visited the site and become familiar with and is satisfied as to the general, local and site conditions that may affect cost, progress, performance and furnishing of the Work.

7.3 Contractor is familiar with and is satisfied as to all federal, state and local Laws and Regulations that may affect cost, progress, performance or furnishing of the Work.

7.4 Contractor has carefully studied all reports of explorations and tests of subsurface conditions at or contiguous to the site and all drawings of physical conditions in or relating to existing surface or subsurface structures at or contiguous to the site (except

Underground Facilities) which have been identified in the Supplementary Conditions as provided in Paragraph 4.02 of the General Conditions. Contractor accepts the determination set forth in the Supplementary Conditions of the extent of the "technical data" contained in such reports and drawings upon which Contractor is entitled to rely as provided in Paragraph 4.02 of the General Conditions. Contractor acknowledges that such reports and drawings are not Contract Documents and may not be complete for Contractor's purposes. Contractor acknowledges that Owner and Engineer do not assume responsibility for the accuracy or completeness of information and data shown or indicated in the Contract Documents with respect to Underground Facilities at or contiguous to the site. Contractor has obtained and carefully studied (or assumes responsibility for having done so) all such additional supplementary examinations, investigations, explorations, tests, studies and data concerning conditions (surface, subsurface and Underground Facilities) at or contiguous to the site or otherwise which may affect cost, progress, performance or furnishing of the Work or which relate to any aspect of the means, methods, techniques, sequences and procedures of construction to be employed by Contractor and safety precautions and programs incident thereto. Contractor does not consider that any additional examinations, investigations, explorations, tests, studies or data are necessary for the performance and furnishing of the Work at the Contract Price, within the Contract Times and in accordance with the other terms and conditions of the Contract Documents.

7.5 Contractor is aware of the general nature of work to be performed by Owner and others at the site that relates to the Work as indicated in the Contract Documents.

7.6 Contractor has correlated the information known to Contractor, information and observations obtained from visits to the site, reports and drawings identified in the Contract Documents and all additional examinations, investigations, explorations, tests, studies and data with the Contract Documents.

7.7 Contractor has given Engineer written notice of all conflicts, errors, ambiguities or discrepancies that Contractor has discovered in the Contract Documents and the written resolution thereof by Engineer is acceptable to Contractor, and the Contract Documents are generally sufficient to indicate and convey understanding of all terms and conditions for performance and furnishing of the Work.

Article 8. CONTRACT DOCUMENTS

The Contract Documents which comprise the entire agreement between Owner and Contractor concerning the Work consist of the following:

8.1 Invitation to Bidders - (Section I)

8.2 Instructions to Bidders - (Section II)

8.3 CDBG-Instructions to Bidders for Construction – (Section II-A)

8.4 Bid Form (Pages 1 to 11 inclusive) as included herein - (Section III)

8.5 This Agreement (Pages 1 to 7 inclusive) - (Section IV)

8.6 Performance, Payment and other Bonds, included herein - (Section V and VI)

8.7 Labor Classification and Minimum Wage Scale - (Section VII)

8.8 Texas Workers' Compensation - (Section VII-A)

8.9 General Conditions - (Section VIII)

8.10 CDBG-General Conditions for Construction Contracts – (Section VIII-A)

8.11 Supplementary Conditions of Agreement - (Section IX)

8.12 Section 3 Policy – (Section X)

8.13 Statement of Bidder’s Qualifications – (Section X-A)

8.14 Non-Collusion Affidavit of Prime Bidder – (Section X-B)

8.15 Certification of Bidder Regarding Civil Rights Laws and Regulations – (Section X-C)

8.16 Certification Regarding Lobbying – (Section X-D)

8.17 Disclosure of Lobbying Activities and Instructions – (Section X-E)

8.18 Minority/Female Goals and Timetables – (Section X-F)

8.19 HUD-4010 Federal Labor Standards Provisions – (Section X-G)

8.20 Title 29-Labor – (Section X-H)

8.21 Concerning Labor Standards and Prevailing Wage Requirements – (Section X-I)

8.22 Project-Specific General Wage Decision – (Section X-J)

8.23 TDA-Temporary Signage Requirements – (Section X-K)

8.24 Required Contract Provisions – (Section X-L)

8.25 Certificate of Interested Parties Form 1295 and Instructions – (Section X-M)

8.26 Conflict of Interest Questionnaire – (Section X-N)

8.27 Contractor’s Local Opportunity Plan – (Section X-O)

8.28 Certificate of Liability Insurance – (Section X-P)

8.29 Section 504 Certification – (Section X-Q)

8.30 Specifications bearing the title "Technical Specifications" and “Special Provisions” as listed in Table of Contents thereof- (Section XI)

8.31 Plans, consisting of a Cover Sheet and sheets number 2 through 12

8.32 Addenda as issued

8.33 Any modification, including Change Orders, duly delivered after Execution of Agreement

There are no Contract Documents other than those listed above in this Article 8. The Contract Documents may only be altered, amended or repealed by a modification (as defined in Article 3 Paragraphs 3.04.A and 3.04.B of the General Conditions).

Article 9. MISCELLANEOUS

9.1 Terms used in this Agreement which are defined in Article 1 of the General Conditions will have the meanings indicated in the General Conditions.

9.2 No assignment by a party hereto of any rights under or interests in the Contract Documents will be binding on another party hereto without the written consent of the party sought to be bound; and specifically but without limitation, moneys that may become due and moneys that are due may not be assigned without such consent (except to the extent that the effect of this restriction may be limited by law), and unless specifically stated to the contrary in any written consent to an assignment, no assignment will release or discharge the assignor from any duty or responsibility under the Contract Documents.

9.3 Owner and Contractor each binds itself, its partners, successors, assigns and legal representatives to the other party hereto, its partners, successors, assigns and legal representatives in respect to all covenants, agreements and obligations contained in the Contract Documents.

9.4 Any provision or part of the Contract Documents held to be void or unenforceable under any Law or Regulation shall be deemed stricken, and all remaining provisions shall continue to be valid and binding upon Owner and Contractor, who agree that the Contract Documents shall be reformed to replace such stricken provision or part thereof with a valid and enforceable provision that comes as close as possible to expressing the intention of the stricken provision.

9.5 Other Provisions

None

IN WITNESS WHEREOF, Owner and Contractor have signed this Agreement in triplicate. One counterpart each has been delivered to Owner, Contractor, and Engineer. All portions of the Contract Documents have been signed, initialed or identified by Owner and Contractor or identified by Engineer on their behalf.

This Agreement will be effective on _____, 2024.

| OWNER: | CONTRACTOR: |
|---|---|
| City of La Marque | _____ |
| By: _____ | By: _____ |
| Keith Bell, Mayor | Name |
| | _____ |
| | Title |

(CORPORATE SEAL)

| | |
|---|---|
| Attest _____ | Attest_____ |
| Kierra Nance, City Clerk | Name |
| | _____ |
| | Title |

| OWNER: | CONTRACTOR: |
|---|---|
| Address for giving notices | Address for giving notices |
| City of La Marque | _____ |
| 1111 Bayou Road | _____ |
| La Marque, Texas 77568 | _____ |

# V

# PERFORMANCE BOND

**V**

**PERFORMANCE BOND**

STATE OF TEXAS }
COUNTY OF GALVESTON }

KNOW ALL MEN BY THESE PRESENTS:

That _____,
hereinafter called Principal, and

_____,
hereinafter called Surety, are held and firmly bound unto the City of La Marque hereinafter called Owner, in the full and just sum of

_____ Dollars,

($_____) good and lawful money of the United States of America for the payment of which well and truly to be made, the said Principal and Surety hereby jointly and severally bind ourselves, heirs, executors, administrators, successors and assigns firmly by these presents.

WHEREAS, the Principal has entered into a certain written contract with the Owner, Agreement dated _____, to which contract is hereby referred to and made a part hereof as fully and to the same extent as if copied at length herein.

NOW, THEREFORE, THE CONDITION OF THIS OBLIGATION IS SUCH that if the said Principal shall faithfully perform said Contract and shall in all respects duly and faithfully observe and perform all and singular the covenants, conditions, and agreements in and by said Contract agreed and covenanted by the Principal to be observed and performed, and according to the true intent and meaning of said Contract and the drawings, and Specifications hereto annexed, then this obligation shall be void; otherwise to remain in full force and effect;

PROVIDED, HOWEVER, that this bond is executed pursuant to the provisions of Chapter 2253 of the Texas Government Code as amended and all liabilities on this bond shall be determined in accordance with the provisions of said Chapter to the same extent as if it were copied at length herein.

Surety, for value received, stipulates and agrees that no change, extension of time, alteration or addition to the terms of contract, or to the work performed there under, or the specifications or drawings accompanying the same, shall in any way affect its obligation on this bond, and it does hereby waive notice of any such change, extension of time, alteration or addition to the terms of the contract, or to the work to be performed there under.

PROVIDED, FURTHER, that no final settlement between the Owner and the Contractor shall abridge the right of any beneficiary hereunder, whose claim may be unsatisfied.

IN WITNESS WHEREOF, the said Principal and Surety have signed and sealed this instrument this _____ day of _____, 2024.

PRINCIPAL:

_____

By _____

Title _____

Address _____

SURETY:

_____

By _____

Title _____

Address _____

NOTE: Date of Bond must not be prior to date of Agreement. If Contractor is Partnership, all partners should execute Bond.

1. _____ principals to provide the following certificate:

**CERTIFICATE AS TO _____ PRINCIPAL**

I, _____, certify that I am secretary of the _____ named as principal in the within Bond, that _____, who signed the said Bond on behalf of the principal, was then _____ of said _____; that I know his signature, and his signature thereto is genuine; and that said Bond was duly signed, sealed, and attested for and in behalf of said _____ by authority of its governing body.

_____ (Corporate Seal required if a Corporation)

2. Surety shall provide a current power of attorney.

3. Date of Bond and surety power-of-attorney must not be dated prior to date of Agreement.

4. Surety companies executing bonds must appear on the Treasury Departments most current list (Circular 570 amended) and be authorized to transact business in the State of Texas.

# VI

# PAYMENT BOND

**VI**

**PAYMENT BOND**

STATE OF TEXAS }
COUNTY OF GALVESTON }

KNOW ALL MEN BY THESE PRESENTS:

That _____,
hereinafter called Principal, and

_____,
hereinafter called Surety, are held and firmly bound unto the City of La Marque hereinafter called Owner, in the full and just sum of

_____ Dollars,

($_____) good and lawful money of the United States of America for the payment of which well and truly to be made, the said Principal and Surety hereby jointly and severally bind ourselves, heirs, executors, administrators, successors and assigns firmly by these presents.

WHEREAS, the Principal has entered into a certain written contract with the Owner, Agreement dated _____, to which contract is hereby referred to and made a part hereof as fully and to the same extent as if copied at length herein.

NOW, THEREFORE, THE CONDITION OF THIS OBLIGATION IS SUCH, that if the said Principal shall pay all claimants supplying labor and material to him or a subcontractor in the prosecution of the work provided for in said contract, then, this obligation shall be void; otherwise to remain in full force and effect.

PROVIDED, HOWEVER, that this bond is executed pursuant to the provisions of Chapter 2253 of the Texas Government Code as amended and all liabilities on this bond shall be determined in accordance with the provisions of said Chapter to the same extent as if it were copied at length herein.

Surety, for value received, stipulates and agrees that no change, extension of time, alteration or addition to the terms of the contract, or to the work performed there under or the specifications or drawings accompanying the same, shall in any way affect its obligation on this bond, and it does hereby waive notice of any such change, extension of time, alteration or addition to the terms of the contract, or to the work to be performed there under.
PROVIDED, FURTHER, that no final settlement between the Owner and the Contractor shall abridge the right of any beneficiary hereunder, whose claim may be unsatisfied.

IN WITNESS WHEREOF, the said Principal and surety have signed and sealed this instrument this _____ day of _____, 2024.

PRINCIPAL:

_____

By _____

Title _____

Address _____

SURETY:

_____

By _____

Title _____

Address _____

NOTE: Date of Bond must not be prior to date of Agreement. If Contractor is Partnership, all partners should execute Bond.

1. _____ principals to provide the following certificate:

**CERTIFICATE AS TO _____ PRINCIPAL**

I, _____, certify that I am secretary of the _____ named as principal in the within Bond, that _____, who signed the said Bond on behalf of the principal, was then _____of said _____; that I know his signature, and his signature thereto is genuine; and that Bond was duly signed, sealed, and attested for and in behalf of said _____ by authority of its governing body.

_____ (Corporate Seal required if a Corporation)

2. Surety shall provide a current power of attorney.

3. Date of Bond and surety power-of-attorney must not be dated prior to date of Agreement.

4. Surety companies executing bonds must appear on the Treasury Departments most current list (Circular 570 amended) and be authorized to transact business in the State of Texas.

"General Decision Number: TX20250062 01/03/2025

Superseded General Decision Number: TX20240062

State: Texas

Construction Type: Heavy

County: Galveston County in Texas.

HEAVY CONSTRUCTION PROJECTS Including Water and Sewer Lines
(Does Not Include Flood Control)

Note: Contracts subject to the Davis-Bacon Act are generally required to pay at least the applicable minimum wage rate required under Executive Order 14026 or Executive Order 13658. Please note that these Executive Orders apply to covered contracts entered into by the federal government that are subject to the Davis-Bacon Act itself, but do not apply to contracts subject only to the Davis-Bacon Related Acts, including those set forth at 29 CFR 5.1(a)(1).

| | |
|---|---|
| If the contract is entered into on or after January 30, 2022, or the contract is renewed or extended (e.g., an option is exercised) on or after January 30, 2022: | . Executive Order 14026 generally applies to the contract.<br>. The contractor must pay all covered workers at least $17.75 per hour (or the applicable wage rate listed on this wage determination, if it is higher) for all hours spent performing on the contract in 2025. |
| If the contract was awarded on or between January 1, 2015 and January 29, 2022, and the contract is not renewed or extended on or after January 30, 2022: | . Executive Order 13658 generally applies to the contract.<br>. The contractor must pay all covered workers at least $13.30 per hour (or the applicable wage rate listed on this wage determination, if it is higher) for all hours spent performing on that contract in 2025. |

The applicable Executive Order minimum wage rate will be adjusted annually. If this contract is covered by one of the Executive Orders and a classification considered necessary for performance of work on the contract does not appear on this wage determination, the contractor must still submit a conformance request.

Additional information on contractor requirements and worker protections under the Executive Orders is available at http://www.dol.gov/whd/govcontracts.

| Modification Number | Publication Date |
|---|---|
| 0 | 01/03/2025 |

SFTX0669-001 04/01/2024

| | Rates | Fringes |
|---|---|---|
| SPRINKLER FITTER (Fire Sprinklers) | $ 36.15 | 23.88 |

SUTX2005-021 08/05/2005

HEAVY Including Water and Sewer Lines (Excluding Flood Control)

| | Rates | Fringes |
|---|---|---|
| Carpenter | $ 14.38 ** | |
| Cement mason/concrete finisher | $ 11.37 ** | 1.13 |
| Electrician | $ 18.40 | 1.34 |
| FORM BUILDER/FORM SETTER | $ 13.35 ** | 1.17 |
| IRONWORKER, REINFORCING | $ 11.29 ** | |
| Laborers: | | |
| Common | $ 10.70 ** | |
| Landscape | $ 7.35 ** | |
| Mason Tender Cement | $ 9.96 ** | |
| Pipelayer | $ 10.07 ** | |
| PIPEFITTER | $ 17.00 ** | 0.04 |
| Power equipment operators: | | |

| | | |
|---|---|---|
| Excavator | $ 16.74 ** | |
| Backhoe | $ 13.25 ** | |
| Bulldozer | $ 14.00 ** | |
| Crane | $ 14.91 ** | 0.58 |
| Front End Loader | $ 11.75 ** | 0.92 |
| Grader | $ 12.20 ** | 1.48 |
| Tractor | $ 12.38 ** | 1.51 |
| TRUCK DRIVER | $ 12.28 ** | 0.98 |

---

WELDERS - Receive rate prescribed for craft performing operation to which welding is incidental.

==========

** Workers in this classification may be entitled to a higher minimum wage under Executive Order 14026 ($17.75) or 13658 ($13.30). Please see the Note at the top of the wage determination for more information. Please also note that the minimum wage requirements of Executive Order 14026 are not currently being enforced as to any contract or subcontract to which the states of Texas, Louisiana, or Mississippi, including their agencies, are a party.

Note: Executive Order (EO) 13706, Establishing Paid Sick Leave for Federal Contractors applies to all contracts subject to the Davis-Bacon Act for which the contract is awarded (and any solicitation was issued) on or after January 1, 2017. If this contract is covered by the EO, the contractor must provide employees with 1 hour of paid sick leave for every 30 hours they work, up to 56 hours of paid sick leave each year. Employees must be permitted to use paid sick leave for their own illness, injury or other health-related needs, including preventive care; to assist a family member (or person who is like family to the employee) who is ill, injured, or has other health-related needs, including preventive care; or for reasons resulting from, or to assist a family member (or person who is like family to the employee) who is a victim of, domestic violence, sexual assault, or stalking. Additional information on contractor requirements and worker protections under the EO is available at https://www.dol.gov/agencies/whd/government-contracts.

Unlisted classifications needed for work not included within the scope of the classifications listed may be added after award only as provided in the labor standards contract clauses (29CFR 5.5 (a) (1) (iii)).

---

The body of each wage determination lists the classifications and wage rates that have been found to be prevailing for the type(s) of construction and geographic area covered by the wage determination. The classifications are listed in alphabetical order under rate identifiers indicating whether the particular rate is a union rate (current union negotiated rate), a survey rate, a weighted union average rate, a state adopted rate, or a supplemental classification rate.

Union Rate Identifiers

A four-letter identifier beginning with characters other than ""SU"", ""UAVG"", ?SA?, or ?SC? denotes that a union rate was prevailing for that classification in the survey. Example: PLUM0198-005 07/01/2024. PLUM is an identifier of the union whose collectively bargained rate prevailed in the survey for this classification, which in this example would be Plumbers. 0198 indicates the local union number or district council number where applicable, i.e., Plumbers Local 0198. The next number, 005 in the example, is an internal number used in processing the wage determination. The date, 07/01/2024 in the example, is the effective date of the most current negotiated rate.

Union prevailing wage rates are updated to reflect all changes over time that are reported to WHD in the rates in the collective bargaining agreement (CBA) governing the classification.

Union Average Rate Identifiers

The UAVG identifier indicates that no single rate prevailed for those classifications, but that 100% of the data reported for the classifications reflected union rates. EXAMPLE: UAVG-OH-0010 01/01/2024. UAVG indicates that the rate is a weighted union average rate. OH indicates the State of Ohio. The next number, 0010 in the example, is an internal number used in producing the wage determination. The date, 01/01/2024 in the example, indicates the date the wage determination was updated to reflect the most current union average rate.

A UAVG rate will be updated once a year, usually in January, to reflect a weighted average of the current rates in the collective bargaining agreements on which the rate is based.

Survey Rate Identifiers

The ""SU"" identifier indicates that either a single non-union rate prevailed (as defined in 29 CFR 1.2) for this classification in the survey or that the rate was derived by computing a weighted average rate based on all the rates reported in the survey for that classification. As a weighted average rate includes all rates reported in the survey, it may include both union and non-union rates. Example: SUFL2022-007 6/27/2024. SU indicates the rate is a single non-union prevailing rate or a weighted average of survey data for that classification. FL indicates the State of Florida. 2022 is the year of the survey on which these classifications and rates are based. The next number, 007 in the example, is an internal number used in producing the wage determination. The date, 6/27/2024 in the example, indicates the survey completion date for the classifications and rates under that identifier.

?SU? wage rates typically remain in effect until a new survey is conducted. However, the Wage and Hour Division (WHD) has the discretion to update such rates under 29 CFR 1.6(c)(1).

State Adopted Rate Identifiers

The ""SA"" identifier indicates that the classifications and prevailing wage rates set by a state (or local) government were adopted under 29 C.F.R 1.3(g)-(h). Example: SAME2023-007 01/03/2024. SA reflects that the rates are state adopted. ME refers to the State of Maine. 2023 is the year during which the state completed the survey on which the listed classifications and rates are based. The next number, 007 in the example, is an internal number used in producing the wage determination. The date, 01/03/2024 in the example, reflects the date on which the classifications and rates under the ?SA? identifier took effect under state law in the state from which the rates were adopted.

---

WAGE DETERMINATION APPEALS PROCESS

1) Has there been an initial decision in the matter? This can be:

a) a survey underlying a wage determination
b) an existing published wage determination
c) an initial WHD letter setting forth a position on a wage determination matter
d) an initial conformance (additional classification and rate) determination

On survey related matters, initial contact, including requests for summaries of surveys, should be directed to the WHD Branch of Wage Surveys. Requests can be submitted via email to davisbaconinfo@dol.gov or by mail to:

Branch of Wage Surveys
Wage and Hour Division
U.S. Department of Labor
200 Constitution Avenue, N.W.
Washington, DC 20210

Regarding any other wage determination matter such as conformance decisions, requests for initial decisions should be directed to the WHD Branch of Construction Wage Determinations. Requests can be submitted via email to BCWD-Office@dol.gov or by mail to:

Branch of Construction Wage Determinations
Wage and Hour Division
U.S. Department of Labor
200 Constitution Avenue, N.W.
Washington, DC 20210

2) If an initial decision has been issued, then any interested party (those affected by the action) that disagrees with the decision can request review and reconsideration from the Wage and Hour Administrator (See 29 CFR Part 1.8 and 29 CFR Part 7). Requests for review and reconsideration can be submitted via email to dba.reconsideration@dol.gov or by mail to:

Wage and Hour Administrator
U.S. Department of Labor
200 Constitution Avenue, N.W.
Washington, DC 20210

The request should be accompanied by a full statement of the interested party's position and any information (wage payment data, project description, area practice material, etc.) that the requestor considers relevant to the issue.

3) If the decision of the Administrator is not favorable, an interested party may appeal directly to the Administrative Review Board (formerly the Wage Appeals Board). Write to:

Administrative Review Board
U.S. Department of Labor
200 Constitution Avenue, N.W.
Washington, DC 20210.

==========

END OF GENERAL DECISION"

# VII

# LABOR CLASSIFICATION AND MINIMUM WAGE SCALE

## VII

## LABOR CLASSIFICATION AND MINIMUM WAGE SCALE

A. **General**

1. As required by Chapter 2258, Subchapter A, Government Code, Building and Procurement Commission, Vernon's Texas Civil Statutes, the Owner has ascertained local prevailing wage rates for the types of work to be performed under this contract. The Classification and Minimum Rates are listed below and made part of the Contract Documents.

2. The Amended Article further provides that the Contractor shall forfeit, as a penalty, to the City, County, or State, or other political subdivision on whose behalf the Contract is made, Sixty Dollars ($60.00) per day for each laborer, or workman or mechanic who is not paid the stipulated wage for the type of work performed by him as set up in the wage scale. The Owner is authorized to withhold from the Contractor the amount of this penalty in any payment that might be claimed by the Contractor or subcontractor. The Act makes the Contractor responsible for the acts of the subcontractor in this respect.

3. The Article likewise requires that the Contractor and subcontractor keep an accurate record of the names and occupations of all persons employed by him and to show the actual per diem wages paid to each worker and these records are open to the inspection of the Owner.

B. **Labor Classification and Minimum Wage Scale**: Attached hereto.

# VII-A

# TEXAS WORKERS' COMPENSATION

**in accordance with**
**28 TAC 110.110**
**DIVISION OF TEXAS WORKERS' COMPENSATION**
**TEXAS DEPARTMENT OF INSURANCE**

# VII-A

## 28 TAC 110.110
## DIVISION OF TEXAS WORKERS' COMPENSATION
## TEXAS DEPARTMENT OF INSURANCE

A. Definitions

Certificate of coverage ("certificate") - A copy of a certificate of insurance, a certificate of authority to self-insure issued by the Texas Department of Insurance "TDI"), or a coverage agreement showing statutory workers' compensation insurance coverage for the person's or entity's employees providing services on a project, for the duration of the project.

Duration of the project - includes the time from the beginning of the work on the project until the Contractor's/person's work on the project has been completed and accepted by the governmental entity.

Persons providing services on the project ("subcontractor" in Section 406.096 of the Texas Labor Code) - includes all person or entities performing all or part of the services the contractor has undertaken to perform on the project, regardless of whether that person contracted directly with the Contractor and regardless of whether that person has employees. This includes, without limitation, independent contractors, subcontractors, leasing companies, motor carriers, owner-operators, employees of any such entity or employees of any entity which furnishes persons to provide services on the project. "Services" include, without limitation, providing, hauling, or delivering equipment or materials, or providing labor, transportation, or other service related to a project. "Services" does not include activities unrelated to the project, such as food/beverage vendors, office supply deliveries, and delivery of portable toilets.

B. The Contractor shall provide coverage, based on proper reporting of classification codes and payroll amounts and filing of any coverage agreement, which meets the statutory requirements of Texas Labor Code, §401.011(44) for all employees of the Contractor providing services on the project, for the duration of the project.

C. The Contractor must provide a certificate of coverage to the Owner prior to being awarded the contract.

D. If the coverage period shown on the Contractor's current certificate of coverage ends during the duration of the project, the Contractor must, prior to the end of the coverage period, file a new certificate of coverage with the Owner, showing that the coverage has been extended.

E. The Contractor shall obtain from each person providing services on the project, and provide to the Owner:
   (1) a certificate of coverage, prior to that person beginning work on the project, so that the Owner will have on file certificates of coverage showing coverage for all persons providing services on the project; and

(2) no later than seven days after receipt by the Contractor, a new certificate of coverage showing extension of coverage, if the coverage period shown on the current certificate of coverage ends during the duration of the project.

F. The Contractor shall retain all required certificates of coverage on file for the duration of the project and for one year thereafter.

G. The Contractor shall notify the Owner in writing by certified mail or personal delivery, within 10 days after the Contractor knew or should have known, of any change that materially affects the provision of coverage of any person providing services on the project.

H. The Contractor shall post on each project site a notice, in the text, form and manner prescribed by the TDI, informing all persons providing services on the project that they are required to be covered, and stating how a person may verify current coverage and report failure to provide coverage.

The sign shall include as a minimum the following:

> Post a notice on each project site informing all persons providing services on the project that they are required to be covered, and stating how a person may verify current coverage and report failure to provide coverage. This notice does not satisfy other posting requirements imposed by the Act or other commission rules. This notice must be printed with a title in at least 30 point bold type and text in at least 19 point normal type, and shall be in both English and Spanish and any other language common to the worker population. The text for the notices shall be the following text provided by the commission on the sample notice, without any additional words or changes:
>
> "REQUIRED WORKERS' COMPENSATION COVERAGE"

I. The Contractor shall contractually require each person with whom it contracts to provide services on a project to:

(1) Provide coverage, based on proper reporting of classification codes and payroll amounts and filing of any coverage agreements, which meets the statutory requirements of Texas Labor Code §401.011(44) for all its employees providing services on the project, for the duration of the project;

(2) provide to the contractor, prior to that person beginning work on the project, a certificate of coverage showing that coverage is being provided for all employees of the person providing services on the project, for the duration of the project;

(3) provide the Contractor, prior to the end of the coverage period, a new certificate of coverage showing extension of coverage, if the coverage period shown on the current certificate of coverage ends during the duration of the project;

(4) Obtain from each other person with whom it contracts, and provide to the Contractor:

(A) a certificate of coverage, prior to the other person beginning work on the project; and

(B) a new certificate of coverage showing extension of the coverage period, prior to the end of the coverage period, if the coverage period shown on the current certificate of coverage ends during the duration of the project;

(5) retain all required certificates of coverage on file for the duration of the project and for one year thereafter;

(6) notify the Owner in writing by certified mail or personal delivery, within 10 days after the person knew or should have known, of any change that materially affects the provision of coverage of any person providing services on the project; and

(7) contractually require each other person with whom it contracts to perform as required by paragraphs (1) - (7), with the certificate of coverage to be provided to the person for whom they are providing services.

J. By signing this contract or providing or causing to be provided a certificate of coverage, the Contractor is representing to the Owner that all employees of the Contractor who will provide services on the project will be covered by workers' compensation coverage for the duration of the project, that the coverage will be based on proper reporting of classification codes and payroll amounts, and that all coverage agreements will be filed with the appropriate insurance carrier or, in the case of a self-insured, with the TDI's requirements and regulations. Providing false or misleading information may subject the contractor to administrative penalties, criminal penalties, civil penalties, or other civil actions.

K. The Contractor's failure to comply with any of these provisions is a breach of contract by the Contractor which entitles the Owner to declare the contract void if the Contractor does not remedy the breach within ten days after receipt of notice of breach from the Owner.

**SPECIAL PROVISION NO. 1**

**TO**

**STANDARD GENERAL CONDITIONS OF THE CONSTRUCTION CONTRACT**

## 1. ARTICLE 16 - DISPUTE RESOLUTION

**Delete Article 16 – Dispute Resolution –** Dispute resolution by mediation is not permitted by this Contract. Disregard the references to Dispute Resolution wherever mentioned in the documents.

# VIII

# GENERAL CONDITIONS

This document has important legal consequences; consultation with an attorney is encouraged with respect to its use or modification. This document should be adapted to the particular circumstances of the contemplated Project and the controlling Laws and Regulations.

# STANDARD GENERAL CONDITIONS OF THE CONSTRUCTION CONTRACT

Prepared by

**ENGINEERS JOINT CONTRACT DOCUMENTS COMMITTEE**

and

Issued and Published Jointly by

AMERICAN COUNCIL OF ENGINEERING COMPANIES

_____

ASSOCIATED GENERAL CONTRACTORS OF AMERICA

_____

AMERICAN SOCIETY OF CIVIL ENGINEERS

_____

PROFESSIONAL ENGINEERS IN PRIVATE PRACTICE
*A Practice Division of the*
NATIONAL SOCIETY OF PROFESSIONAL ENGINEERS

Endorsed by

CONSTRUCTION SPECIFICATIONS INSTITUTE

**EJCDC C-700 Standard General Conditions of the Construction Contract**
**Copyright © 2007 National Society of Professional Engineers for EJCDC. All rights reserved.**

These General Conditions have been prepared for use with the Suggested Forms of Agreement Between Owner and Contractor (EJCDC C-520 or C-525, 2007 Editions). Their provisions are interrelated and a change in one may necessitate a change in the other. Comments concerning their usage are contained in the Narrative Guide to the EJCDC Construction Documents (EJCDC C-001, 2007 Edition). For guidance in the preparation of Supplementary Conditions, see Guide to the Preparation of Supplementary Conditions (EJCDC C-800, 2007 Edition).

Copyright © 2007 National Society of Professional Engineers
1420 King Street, Alexandria, VA 22314-2794
(703) 684-2882
www.nspe.org

American Council of Engineering Companies
1015 15th Street N.W., Washington, DC 20005
(202) 347-7474
www.acec.org

American Society of Civil Engineers
1801 Alexander Bell Drive, Reston, VA 20191-4400
(800) 548-2723
www.asce.org

Associated General Contractors of America
2300 Wilson Boulevard, Suite 400, Arlington, VA 22201-3308
(703) 548-3118
www.agc.org

The copyright for this EJCDC document is owned jointly by the four
EJCDC sponsoring organizations and held in trust for their benefit by NSPE.


**Copyright © 2007 National Society of Professional Engineers for EJCDC. All rights reserved.**

# STANDARD GENERAL CONDITIONS OF THE CONSTRUCTION CONTRACT

## TABLE OF CONTENTS

**Page**


Article 1 – Definitions and Terminology ..... 1
1.01 Defined Terms ..... 1
1.02 Terminology ..... 5

Article 2 – Preliminary Matters ..... 6
2.01 Delivery of Bonds and Evidence of Insurance ..... 6
2.02 Copies of Documents ..... 6
2.03 Commencement of Contract Times; Notice to Proceed ..... 6
2.04 Starting the Work ..... 7
2.05 Before Starting Construction ..... 7
2.06 Preconstruction Conference; Designation of Authorized Representatives ..... 7
2.07 Initial Acceptance of Schedules ..... 7

Article 3 – Contract Documents: Intent, Amending, Reuse ..... 8
3.01 Intent ..... 8
3.02 Reference Standards ..... 8
3.03 Reporting and Resolving Discrepancies ..... 8
3.04 Amending and Supplementing Contract Documents ..... 9
3.05 Reuse of Documents ..... 10
3.06 Electronic Data ..... 10

Article 4 – Availability of Lands; Subsurface and Physical Conditions; Hazardous Environmental Conditions; Reference Points ..... 10
4.01 Availability of Lands ..... 10
4.02 Subsurface and Physical Conditions ..... 11
4.03 Differing Subsurface or Physical Conditions ..... 11
4.04 Underground Facilities ..... 13
4.05 Reference Points ..... 14
4.06 Hazardous Environmental Condition at Site ..... 14

Article 5 – Bonds and Insurance ..... 16
5.01 Performance, Payment, and Other Bonds ..... 16
5.02 Licensed Sureties and Insurers ..... 16
5.03 Certificates of Insurance ..... 16
5.04 Contractor's Insurance ..... 17
5.05 Owner's Liability Insurance ..... 18
5.06 Property Insurance ..... 18
5.07 Waiver of Rights ..... 20
5.08 Receipt and Application of Insurance Proceeds ..... 21
5.09 Acceptance of Bonds and Insurance; Option to Replace ..... 21




**Copyright © 2007 National Society of Professional Engineers for EJCDC. All rights reserved.**

5.10 Partial Utilization, Acknowledgment of Property Insurer ..... 21

Article 6 – Contractor's Responsibilities ..... 22
6.01 Supervision and Superintendence ..... 22
6.02 Labor; Working Hours ..... 22
6.03 Services, Materials, and Equipment ..... 22
6.04 Progress Schedule ..... 23
6.05 Substitutes and "Or-Equals" ..... 23
6.06 Concerning Subcontractors, Suppliers, and Others ..... 25
6.07 Patent Fees and Royalties ..... 26
6.08 Permits ..... 27
6.09 Laws and Regulations ..... 27
6.10 Taxes ..... 28
6.11 Use of Site and Other Areas ..... 28
6.12 Record Documents ..... 29
6.13 Safety and Protection ..... 29
6.14 Safety Representative ..... 30
6.15 Hazard Communication Programs ..... 30
6.16 Emergencies ..... 30
6.17 Shop Drawings and Samples ..... 30
6.18 Continuing the Work ..... 32
6.19 Contractor's General Warranty and Guarantee ..... 32
6.20 Indemnification ..... 33
6.21 Delegation of Professional Design Services ..... 34

Article 7 – Other Work at the Site ..... 34
7.01 Related Work at Site ..... 34
7.02 Coordination ..... 35
7.03 Legal Relationships ..... 35

Article 8 – Owner's Responsibilities ..... 36
8.01 Communications to Contractor ..... 36
8.02 Replacement of Engineer ..... 36
8.03 Furnish Data ..... 36
8.04 Pay When Due ..... 36
8.05 Lands and Easements; Reports and Tests ..... 36
8.06 Insurance ..... 36
8.07 Change Orders ..... 36
8.08 Inspections, Tests, and Approvals ..... 36
8.09 Limitations on Owner's Responsibilities ..... 36
8.10 Undisclosed Hazardous Environmental Condition ..... 37
8.11 Evidence of Financial Arrangements ..... 37
8.12 Compliance with Safety Program ..... 37

Article 9 – Engineer's Status During Construction ..... 37
9.01 Owner's Representative ..... 37
9.02 Visits to Site ..... 37
9.03 Project Representative ..... 38


**Copyright © 2007 National Society of Professional Engineers for EJCDC. All rights reserved.**

9.04 Authorized Variations in Work ..... 38
9.05 Rejecting Defective Work ..... 38
9.06 Shop Drawings, Change Orders and Payments ..... 38
9.07 Determinations for Unit Price Work ..... 38
9.08 Decisions on Requirements of Contract Documents and Acceptability of Work ..... 39
9.09 Limitations on Engineer's Authority and Responsibilities ..... 39
9.10 Compliance with Safety Program ..... 40

Article 10 – Changes in the Work; Claims ..... 40
10.01 Authorized Changes in the Work ..... 40
10.02 Unauthorized Changes in the Work ..... 40
10.03 Execution of Change Orders ..... 40
10.04 Notification to Surety ..... 41
10.05 Claims ..... 41

Article 11 – Cost of the Work; Allowances; Unit Price Work ..... 42
11.01 Cost of the Work ..... 42
11.02 Allowances ..... 44
11.03 Unit Price Work ..... 45

Article 12 – Change of Contract Price; Change of Contract Times ..... 45
12.01 Change of Contract Price ..... 45
12.02 Change of Contract Times ..... 47
12.03 Delays ..... 47

Article 13 – Tests and Inspections; Correction, Removal or Acceptance of Defective Work ..... 48
13.01 Notice of Defects ..... 48
13.02 Access to Work ..... 48
13.03 Tests and Inspections ..... 48
13.04 Uncovering Work ..... 49
13.05 Owner May Stop the Work ..... 49
13.06 Correction or Removal of Defective Work ..... 49
13.07 Correction Period ..... 50
13.08 Acceptance of Defective Work ..... 51
13.09 Owner May Correct Defective Work ..... 51

Article 14 – Payments to Contractor and Completion ..... 52
14.01 Schedule of Values ..... 52
14.02 Progress Payments ..... 52
14.03 Contractor's Warranty of Title ..... 54
14.04 Substantial Completion ..... 55
14.05 Partial Utilization ..... 55
14.06 Final Inspection ..... 56
14.07 Final Payment ..... 56
14.08 Final Completion Delayed ..... 57
14.09 Waiver of Claims ..... 58


**Copyright © 2007 National Society of Professional Engineers for EJCDC. All rights reserved.**

Article 15 – Suspension of Work and Termination ..... 58
15.01 Owner May Suspend Work ..... 58
15.02 Owner May Terminate for Cause ..... 58
15.03 Owner May Terminate For Convenience ..... 59
15.04 Contractor May Stop Work or Terminate ..... 60

Article 16 – Dispute Resolution ..... 60
16.01 Methods and Procedures ..... 60

Article 17 – Miscellaneous ..... 61
17.01 Giving Notice ..... 61
17.02 Computation of Times ..... 61
17.03 Cumulative Remedies ..... 61
17.04 Survival of Obligations ..... 61
17.05 Controlling Law ..... 61
17.06 Headings ..... 61


**Copyright © 2007 National Society of Professional Engineers for EJCDC. All rights reserved.**

## ARTICLE 1 – DEFINITIONS AND TERMINOLOGY

1.01 *Defined Terms*

A. Wherever used in the Bidding Requirements or Contract Documents and printed with initial capital letters, the terms listed below will have the meanings indicated which are applicable to both the singular and plural thereof. In addition to terms specifically defined, terms with initial capital letters in the Contract Documents include references to identified articles and paragraphs, and the titles of other documents or forms.

1. *Addenda*—Written or graphic instruments issued prior to the opening of Bids which clarify, correct, or change the Bidding Requirements or the proposed Contract Documents.

2. *Agreement*—The written instrument which is evidence of the agreement between Owner and Contractor covering the Work.

3. *Application for Payment*—The form acceptable to Engineer which is to be used by Contractor during the course of the Work in requesting progress or final payments and which is to be accompanied by such supporting documentation as is required by the Contract Documents.

4. *Asbestos*—Any material that contains more than one percent asbestos and is friable or is releasing asbestos fibers into the air above current action levels established by the United States Occupational Safety and Health Administration.

5. *Bid*—The offer or proposal of a Bidder submitted on the prescribed form setting forth the prices for the Work to be performed.

6. *Bidder*—The individual or entity who submits a Bid directly to Owner.

7. *Bidding Documents*—The Bidding Requirements and the proposed Contract Documents (including all Addenda).

8. *Bidding Requirements*—The advertisement or invitation to bid, Instructions to Bidders, Bid security of acceptable form, if any, and the Bid Form with any supplements.

9. *Change Order*—A document recommended by Engineer which is signed by Contractor and Owner and authorizes an addition, deletion, or revision in the Work or an adjustment in the Contract Price or the Contract Times, issued on or after the Effective Date of the Agreement.

10. *Claim*—A demand or assertion by Owner or Contractor seeking an adjustment of Contract Price or Contract Times, or both, or other relief with respect to the terms of the Contract. A demand for money or services by a third party is not a Claim.

11. *Contract*—The entire and integrated written agreement between the Owner and Contractor concerning the Work. The Contract supersedes prior negotiations, representations, or agreements, whether written or oral.


**Copyright © 2007 National Society of Professional Engineers for EJCDC. All rights reserved.**

12. *Contract Documents*—Those items so designated in the Agreement. Only printed or hard copies of the items listed in the Agreement are Contract Documents. Approved Shop Drawings, other Contractor submittals, and the reports and drawings of subsurface and physical conditions are not Contract Documents.

13. *Contract Price*—The moneys payable by Owner to Contractor for completion of the Work in accordance with the Contract Documents as stated in the Agreement (subject to the provisions of Paragraph 11.03 in the case of Unit Price Work).

14. *Contract Times*—The number of days or the dates stated in the Agreement to: (i) achieve Milestones, if any; (ii) achieve Substantial Completion; and (iii) complete the Work so that it is ready for final payment as evidenced by Engineer's written recommendation of final payment.

15. *Contractor*—The individual or entity with whom Owner has entered into the Agreement.

16. *Cost of the Work*—See Paragraph 11.01 for definition.

17. *Drawings*—That part of the Contract Documents prepared or approved by Engineer which graphically shows the scope, extent, and character of the Work to be performed by Contractor. Shop Drawings and other Contractor submittals are not Drawings as so defined.

18. *Effective Date of the Agreement*—The date indicated in the Agreement on which it becomes effective, but if no such date is indicated, it means the date on which the Agreement is signed and delivered by the last of the two parties to sign and deliver.

19. *Engineer*—The individual or entity named as such in the Agreement.

20. *Field Order*—A written order issued by Engineer which requires minor changes in the Work but which does not involve a change in the Contract Price or the Contract Times.

21. *General Requirements*—Sections of Division 1 of the Specifications.

22. *Hazardous Environmental Condition*—The presence at the Site of Asbestos, PCBs, Petroleum, Hazardous Waste, or Radioactive Material in such quantities or circumstances that may present a substantial danger to persons or property exposed thereto.

23. *Hazardous Waste*—The term Hazardous Waste shall have the meaning provided in Section 1004 of the Solid Waste Disposal Act (42 USC Section 6903) as amended from time to time.

24. *Laws and Regulations; Laws or Regulations*—Any and all applicable laws, rules, regulations, ordinances, codes, and orders of any and all governmental bodies, agencies, authorities, and courts having jurisdiction.

25. *Liens*—Charges, security interests, or encumbrances upon Project funds, real property, or personal property.

26. *Milestone*—A principal event specified in the Contract Documents relating to an intermediate completion date or time prior to Substantial Completion of all the Work.


**Copyright © 2007 National Society of Professional Engineers for EJCDC. All rights reserved.**

27. *Notice of Award*—The written notice by Owner to the Successful Bidder stating that upon timely compliance by the Successful Bidder with the conditions precedent listed therein, Owner will sign and deliver the Agreement.

28. *Notice to Proceed*—A written notice given by Owner to Contractor fixing the date on which the Contract Times will commence to run and on which Contractor shall start to perform the Work under the Contract Documents.

29. *Owner*—The individual or entity with whom Contractor has entered into the Agreement and for whom the Work is to be performed.

30. *PCBs*—Polychlorinated biphenyls.

31. *Petroleum*—Petroleum, including crude oil or any fraction thereof which is liquid at standard conditions of temperature and pressure (60 degrees Fahrenheit and 14.7 pounds per square inch absolute), such as oil, petroleum, fuel oil, oil sludge, oil refuse, gasoline, kerosene, and oil mixed with other non-Hazardous Waste and crude oils.

32. *Progress Schedule*—A schedule, prepared and maintained by Contractor, describing the sequence and duration of the activities comprising the Contractor's plan to accomplish the Work within the Contract Times.

33. *Project*—The total construction of which the Work to be performed under the Contract Documents may be the whole, or a part.

34. *Project Manual*—The bound documentary information prepared for bidding and constructing the Work. A listing of the contents of the Project Manual, which may be bound in one or more volumes, is contained in the table(s) of contents.

35. *Radioactive Material*—Source, special nuclear, or byproduct material as defined by the Atomic Energy Act of 1954 (42 USC Section 2011 et seq.) as amended from time to time.

36. *Resident Project Representative*—The authorized representative of Engineer who may be assigned to the Site or any part thereof.

37. *Samples*—Physical examples of materials, equipment, or workmanship that are representative of some portion of the Work and which establish the standards by which such portion of the Work will be judged.

38. *Schedule of Submittals*—A schedule, prepared and maintained by Contractor, of required submittals and the time requirements to support scheduled performance of related construction activities.

39. *Schedule of Values*—A schedule, prepared and maintained by Contractor, allocating portions of the Contract Price to various portions of the Work and used as the basis for reviewing Contractor's Applications for Payment.


**Copyright © 2007 National Society of Professional Engineers for EJCDC. All rights reserved.**

40. *Shop Drawings*—All drawings, diagrams, illustrations, schedules, and other data or information which are specifically prepared or assembled by or for Contractor and submitted by Contractor to illustrate some portion of the Work.

41. *Site*—Lands or areas indicated in the Contract Documents as being furnished by Owner upon which the Work is to be performed, including rights-of-way and easements for access thereto, and such other lands furnished by Owner which are designated for the use of Contractor.

42. *Specifications*—That part of the Contract Documents consisting of written requirements for materials, equipment, systems, standards and workmanship as applied to the Work, and certain administrative requirements and procedural matters applicable thereto.

43. *Subcontractor*—An individual or entity having a direct contract with Contractor or with any other Subcontractor for the performance of a part of the Work at the Site.

44. *Substantial Completion*—The time at which the Work (or a specified part thereof) has progressed to the point where, in the opinion of Engineer, the Work (or a specified part thereof) is sufficiently complete, in accordance with the Contract Documents, so that the Work (or a specified part thereof) can be utilized for the purposes for which it is intended. The terms "substantially complete" and "substantially completed" as applied to all or part of the Work refer to Substantial Completion thereof.

45. *Successful Bidder*—The Bidder submitting a responsive Bid to whom Owner makes an award.

46. *Supplementary Conditions*—That part of the Contract Documents which amends or supplements these General Conditions.

47. *Supplier*—A manufacturer, fabricator, supplier, distributor, materialman, or vendor having a direct contract with Contractor or with any Subcontractor to furnish materials or equipment to be incorporated in the Work by Contractor or Subcontractor.

48. *Underground Facilities*—All underground pipelines, conduits, ducts, cables, wires, manholes, vaults, tanks, tunnels, or other such facilities or attachments, and any encasements containing such facilities, including those that convey electricity, gases, steam, liquid petroleum products, telephone or other communications, cable television, water, wastewater, storm water, other liquids or chemicals, or traffic or other control systems.

49. *Unit Price Work*—Work to be paid for on the basis of unit prices.

50. *Work*—The entire construction or the various separately identifiable parts thereof required to be provided under the Contract Documents. Work includes and is the result of performing or providing all labor, services, and documentation necessary to produce such construction, and furnishing, installing, and incorporating all materials and equipment into such construction, all as required by the Contract Documents.

51. *Work Change Directive*—A written statement to Contractor issued on or after the Effective Date of the Agreement and signed by Owner and recommended by Engineer ordering an


**Copyright © 2007 National Society of Professional Engineers for EJCDC. All rights reserved.**

addition, deletion, or revision in the Work, or responding to differing or unforeseen subsurface or physical conditions under which the Work is to be performed or to emergencies. A Work Change Directive will not change the Contract Price or the Contract Times but is evidence that the parties expect that the change ordered or documented by a Work Change Directive will be incorporated in a subsequently issued Change Order following negotiations by the parties as to its effect, if any, on the Contract Price or Contract Times.

1.02 *Terminology*

A. The words and terms discussed in Paragraph 1.02.B through F are not defined but, when used in the Bidding Requirements or Contract Documents, have the indicated meaning.

B. *Intent of Certain Terms or Adjectives:*

1. The Contract Documents include the terms "as allowed," "as approved," "as ordered," "as directed" or terms of like effect or import to authorize an exercise of professional judgment by Engineer. In addition, the adjectives "reasonable," "suitable," "acceptable," "proper," "satisfactory," or adjectives of like effect or import are used to describe an action or determination of Engineer as to the Work. It is intended that such exercise of professional judgment, action, or determination will be solely to evaluate, in general, the Work for compliance with the information in the Contract Documents and with the design concept of the Project as a functioning whole as shown or indicated in the Contract Documents (unless there is a specific statement indicating otherwise). The use of any such term or adjective is not intended to and shall not be effective to assign to Engineer any duty or authority to supervise or direct the performance of the Work, or any duty or authority to undertake responsibility contrary to the provisions of Paragraph 9.09 or any other provision of the Contract Documents.

C. *Day:*

1. The word "day" means a calendar day of 24 hours measured from midnight to the next midnight.

D. *Defective:*

1. The word "defective," when modifying the word "Work," refers to Work that is unsatisfactory, faulty, or deficient in that it:

a. does not conform to the Contract Documents; or

b. does not meet the requirements of any applicable inspection, reference standard, test, or approval referred to in the Contract Documents; or

c. has been damaged prior to Engineer's recommendation of final payment (unless responsibility for the protection thereof has been assumed by Owner at Substantial Completion in accordance with Paragraph 14.04 or 14.05).


**Copyright © 2007 National Society of Professional Engineers for EJCDC. All rights reserved.**

E. *Furnish, Install, Perform, Provide:*

1. The word "furnish," when used in connection with services, materials, or equipment, shall mean to supply and deliver said services, materials, or equipment to the Site (or some other specified location) ready for use or installation and in usable or operable condition.

2. The word "install," when used in connection with services, materials, or equipment, shall mean to put into use or place in final position said services, materials, or equipment complete and ready for intended use.

3. The words "perform" or "provide," when used in connection with services, materials, or equipment, shall mean to furnish and install said services, materials, or equipment complete and ready for intended use.

4. When "furnish," "install," "perform," or "provide" is not used in connection with services, materials, or equipment in a context clearly requiring an obligation of Contractor, "provide" is implied.

F. Unless stated otherwise in the Contract Documents, words or phrases that have a well-known technical or construction industry or trade meaning are used in the Contract Documents in accordance with such recognized meaning.

## ARTICLE 2 – PRELIMINARY MATTERS

2.01 *Delivery of Bonds and Evidence of Insurance*

A. When Contractor delivers the executed counterparts of the Agreement to Owner, Contractor shall also deliver to Owner such bonds as Contractor may be required to furnish.

B. *Evidence of Insurance:* Before any Work at the Site is started, Contractor and Owner shall each deliver to the other, with copies to each additional insured identified in the Supplementary Conditions, certificates of insurance (and other evidence of insurance which either of them or any additional insured may reasonably request) which Contractor and Owner respectively are required to purchase and maintain in accordance with Article 5.

2.02 *Copies of Documents*

A. Owner shall furnish to Contractor up to ten printed or hard copies of the Drawings and Project Manual. Additional copies will be furnished upon request at the cost of reproduction.

2.03 *Commencement of Contract Times; Notice to Proceed*

A. The Contract Times will commence to run on the thirtieth day after the Effective Date of the Agreement or, if a Notice to Proceed is given, on the day indicated in the Notice to Proceed. A Notice to Proceed may be given at any time within 30 days after the Effective Date of the Agreement. In no event will the Contract Times commence to run later than the sixtieth day after the day of Bid opening or the thirtieth day after the Effective Date of the Agreement, whichever date is earlier.


**Copyright © 2007 National Society of Professional Engineers for EJCDC. All rights reserved.**

2.04 *Starting the Work*

A. Contractor shall start to perform the Work on the date when the Contract Times commence to run. No Work shall be done at the Site prior to the date on which the Contract Times commence to run.

2.05 *Before Starting Construction*

A. *Preliminary Schedules:* Within 10 days after the Effective Date of the Agreement (unless otherwise specified in the General Requirements), Contractor shall submit to Engineer for timely review:

1. a preliminary Progress Schedule indicating the times (numbers of days or dates) for starting and completing the various stages of the Work, including any Milestones specified in the Contract Documents;

2. a preliminary Schedule of Submittals; and

3. a preliminary Schedule of Values for all of the Work which includes quantities and prices of items which when added together equal the Contract Price and subdivides the Work into component parts in sufficient detail to serve as the basis for progress payments during performance of the Work. Such prices will include an appropriate amount of overhead and profit applicable to each item of Work.

2.06 *Preconstruction Conference; Designation of Authorized Representatives*

A. Before any Work at the Site is started, a conference attended by Owner, Contractor, Engineer, and others as appropriate will be held to establish a working understanding among the parties as to the Work and to discuss the schedules referred to in Paragraph 2.05.A, procedures for handling Shop Drawings and other submittals, processing Applications for Payment, and maintaining required records.

B. At this conference Owner and Contractor each shall designate, in writing, a specific individual to act as its authorized representative with respect to the services and responsibilities under the Contract. Such individuals shall have the authority to transmit instructions, receive information, render decisions relative to the Contract, and otherwise act on behalf of each respective party.

2.07 *Initial Acceptance of Schedules*

A. At least 10 days before submission of the first Application for Payment a conference attended by Contractor, Engineer, and others as appropriate will be held to review for acceptability to Engineer as provided below the schedules submitted in accordance with Paragraph 2.05.A. Contractor shall have an additional 10 days to make corrections and adjustments and to complete and resubmit the schedules. No progress payment shall be made to Contractor until acceptable schedules are submitted to Engineer.

1. The Progress Schedule will be acceptable to Engineer if it provides an orderly progression of the Work to completion within the Contract Times. Such acceptance will not impose on Engineer responsibility for the Progress Schedule, for sequencing, scheduling, or progress of


**Copyright © 2007 National Society of Professional Engineers for EJCDC. All rights reserved.**

the Work, nor interfere with or relieve Contractor from Contractor's full responsibility therefor.

2. Contractor's Schedule of Submittals will be acceptable to Engineer if it provides a workable arrangement for reviewing and processing the required submittals.

3. Contractor's Schedule of Values will be acceptable to Engineer as to form and substance if it provides a reasonable allocation of the Contract Price to component parts of the Work.

## ARTICLE 3 – CONTRACT DOCUMENTS: INTENT, AMENDING, REUSE

3.01 *Intent*

A. The Contract Documents are complementary; what is required by one is as binding as if required by all.

B. It is the intent of the Contract Documents to describe a functionally complete project (or part thereof) to be constructed in accordance with the Contract Documents. Any labor, documentation, services, materials, or equipment that reasonably may be inferred from the Contract Documents or from prevailing custom or trade usage as being required to produce the indicated result will be provided whether or not specifically called for, at no additional cost to Owner.

C. Clarifications and interpretations of the Contract Documents shall be issued by Engineer as provided in Article 9.

3.02 *Reference Standards*

A. Standards, Specifications, Codes, Laws, and Regulations

1. Reference to standards, specifications, manuals, or codes of any technical society, organization, or association, or to Laws or Regulations, whether such reference be specific or by implication, shall mean the standard, specification, manual, code, or Laws or Regulations in effect at the time of opening of Bids (or on the Effective Date of the Agreement if there were no Bids), except as may be otherwise specifically stated in the Contract Documents.

2. No provision of any such standard, specification, manual, or code, or any instruction of a Supplier, shall be effective to change the duties or responsibilities of Owner, Contractor, or Engineer, or any of their subcontractors, consultants, agents, or employees, from those set forth in the Contract Documents. No such provision or instruction shall be effective to assign to Owner, Engineer, or any of their officers, directors, members, partners, employees, agents, consultants, or subcontractors, any duty or authority to supervise or direct the performance of the Work or any duty or authority to undertake responsibility inconsistent with the provisions of the Contract Documents.

3.03 *Reporting and Resolving Discrepancies*

A. *Reporting Discrepancies:*


**Copyright © 2007 National Society of Professional Engineers for EJCDC. All rights reserved.**

1. *Contractor's Review of Contract Documents Before Starting Work*: Before undertaking each part of the Work, Contractor shall carefully study and compare the Contract Documents and check and verify pertinent figures therein and all applicable field measurements. Contractor shall promptly report in writing to Engineer any conflict, error, ambiguity, or discrepancy which Contractor discovers, or has actual knowledge of, and shall obtain a written interpretation or clarification from Engineer before proceeding with any Work affected thereby.

2. *Contractor's Review of Contract Documents During Performance of Work*: If, during the performance of the Work, Contractor discovers any conflict, error, ambiguity, or discrepancy within the Contract Documents, or between the Contract Documents and (a) any applicable Law or Regulation , (b) any standard, specification, manual, or code, or (c) any instruction of any Supplier, then Contractor shall promptly report it to Engineer in writing. Contractor shall not proceed with the Work affected thereby (except in an emergency as required by Paragraph 6.16.A) until an amendment or supplement to the Contract Documents has been issued by one of the methods indicated in Paragraph 3.04.

3. Contractor shall not be liable to Owner or Engineer for failure to report any conflict, error, ambiguity, or discrepancy in the Contract Documents unless Contractor had actual knowledge thereof.

B. *Resolving Discrepancies:*

1. Except as may be otherwise specifically stated in the Contract Documents, the provisions of the Contract Documents shall take precedence in resolving any conflict, error, ambiguity, or discrepancy between the provisions of the Contract Documents and:

   a. the provisions of any standard, specification, manual, or code, or the instruction of any Supplier (whether or not specifically incorporated by reference in the Contract Documents); or

   b. the provisions of any Laws or Regulations applicable to the performance of the Work (unless such an interpretation of the provisions of the Contract Documents would result in violation of such Law or Regulation).

3.04 *Amending and Supplementing Contract Documents*

A. The Contract Documents may be amended to provide for additions, deletions, and revisions in the Work or to modify the terms and conditions thereof by either a Change Order or a Work Change Directive.

B. The requirements of the Contract Documents may be supplemented, and minor variations and deviations in the Work may be authorized, by one or more of the following ways:

1. A Field Order;

2. Engineer's approval of a Shop Drawing or Sample (subject to the provisions of Paragraph 6.17.D.3); or


**Copyright © 2007 National Society of Professional Engineers for EJCDC. All rights reserved.**

3. Engineer's written interpretation or clarification.

3.05 *Reuse of Documents*

A. Contractor and any Subcontractor or Supplier shall not:

1. have or acquire any title to or ownership rights in any of the Drawings, Specifications, or other documents (or copies of any thereof) prepared by or bearing the seal of Engineer or its consultants, including electronic media editions; or

2. reuse any such Drawings, Specifications, other documents, or copies thereof on extensions of the Project or any other project without written consent of Owner and Engineer and specific written verification or adaptation by Engineer.

B. The prohibitions of this Paragraph 3.05 will survive final payment, or termination of the Contract. Nothing herein shall preclude Contractor from retaining copies of the Contract Documents for record purposes.

3.06 *Electronic Data*

A. Unless otherwise stated in the Supplementary Conditions, the data furnished by Owner or Engineer to Contractor, or by Contractor to Owner or Engineer, that may be relied upon are limited to the printed copies (also known as hard copies). Files in electronic media format of text, data, graphics, or other types are furnished only for the convenience of the receiving party. Any conclusion or information obtained or derived from such electronic files will be at the user's sole risk. If there is a discrepancy between the electronic files and the hard copies, the hard copies govern.

B. Because data stored in electronic media format can deteriorate or be modified inadvertently or otherwise without authorization of the data's creator, the party receiving electronic files agrees that it will perform acceptance tests or procedures within 60 days, after which the receiving party shall be deemed to have accepted the data thus transferred. Any errors detected within the 60-day acceptance period will be corrected by the transferring party.

C. When transferring documents in electronic media format, the transferring party makes no representations as to long term compatibility, usability, or readability of documents resulting from the use of software application packages, operating systems, or computer hardware differing from those used by the data's creator.

## ARTICLE 4 – AVAILABILITY OF LANDS; SUBSURFACE AND PHYSICAL CONDITIONS; HAZARDOUS ENVIRONMENTAL CONDITIONS; REFERENCE POINTS

4.01 *Availability of Lands*

A. Owner shall furnish the Site. Owner shall notify Contractor of any encumbrances or restrictions not of general application but specifically related to use of the Site with which Contractor must comply in performing the Work. Owner will obtain in a timely manner and pay for easements for permanent structures or permanent changes in existing facilities. If Contractor and Owner are unable to agree on entitlement to or on the amount or extent, if any, of any adjustment in the


**Copyright © 2007 National Society of Professional Engineers for EJCDC. All rights reserved.**

Contract Price or Contract Times, or both, as a result of any delay in Owner's furnishing the Site or a part thereof, Contractor may make a Claim therefor as provided in Paragraph 10.05.

B. Upon reasonable written request, Owner shall furnish Contractor with a current statement of record legal title and legal description of the lands upon which the Work is to be performed and Owner's interest therein as necessary for giving notice of or filing a mechanic's or construction lien against such lands in accordance with applicable Laws and Regulations.

C. Contractor shall provide for all additional lands and access thereto that may be required for temporary construction facilities or storage of materials and equipment.

4.02 *Subsurface and Physical Conditions*

A. *Reports and Drawings:* The Supplementary Conditions identify:

1. those reports known to Owner of explorations and tests of subsurface conditions at or contiguous to the Site; and

2. those drawings known to Owner of physical conditions relating to existing surface or subsurface structures at the Site (except Underground Facilities).

B. *Limited Reliance by Contractor on Technical Data Authorized:* Contractor may rely upon the accuracy of the "technical data" contained in such reports and drawings, but such reports and drawings are not Contract Documents. Such "technical data" is identified in the Supplementary Conditions. Except for such reliance on such "technical data," Contractor may not rely upon or make any claim against Owner or Engineer, or any of their officers, directors, members, partners, employees, agents, consultants, or subcontractors with respect to:

1. the completeness of such reports and drawings for Contractor's purposes, including, but not limited to, any aspects of the means, methods, techniques, sequences, and procedures of construction to be employed by Contractor, and safety precautions and programs incident thereto; or

2. other data, interpretations, opinions, and information contained in such reports or shown or indicated in such drawings; or

3. any Contractor interpretation of or conclusion drawn from any "technical data" or any such other data, interpretations, opinions, or information.

4.03 *Differing Subsurface or Physical Conditions*

A. *Notice:* If Contractor believes that any subsurface or physical condition that is uncovered or revealed either:

1. is of such a nature as to establish that any "technical data" on which Contractor is entitled to rely as provided in Paragraph 4.02 is materially inaccurate; or

2. is of such a nature as to require a change in the Contract Documents; or

3. differs materially from that shown or indicated in the Contract Documents; or


**Copyright © 2007 National Society of Professional Engineers for EJCDC. All rights reserved.**

4. is of an unusual nature, and differs materially from conditions ordinarily encountered and generally recognized as inherent in work of the character provided for in the Contract Documents;

then Contractor shall, promptly after becoming aware thereof and before further disturbing the subsurface or physical conditions or performing any Work in connection therewith (except in an emergency as required by Paragraph 6.16.A), notify Owner and Engineer in writing about such condition. Contractor shall not further disturb such condition or perform any Work in connection therewith (except as aforesaid) until receipt of written order to do so.

B. *Engineer's Review*: After receipt of written notice as required by Paragraph 4.03.A, Engineer will promptly review the pertinent condition, determine the necessity of Owner's obtaining additional exploration or tests with respect thereto, and advise Owner in writing (with a copy to Contractor) of Engineer's findings and conclusions.

C. *Possible Price and Times Adjustments:*

1. The Contract Price or the Contract Times, or both, will be equitably adjusted to the extent that the existence of such differing subsurface or physical condition causes an increase or decrease in Contractor's cost of, or time required for, performance of the Work; subject, however, to the following:

   a. such condition must meet any one or more of the categories described in Paragraph 4.03.A; and

   b. with respect to Work that is paid for on a unit price basis, any adjustment in Contract Price will be subject to the provisions of Paragraphs 9.07 and 11.03.

2. Contractor shall not be entitled to any adjustment in the Contract Price or Contract Times if:

   a. Contractor knew of the existence of such conditions at the time Contractor made a final commitment to Owner with respect to Contract Price and Contract Times by the submission of a Bid or becoming bound under a negotiated contract; or

   b. the existence of such condition could reasonably have been discovered or revealed as a result of any examination, investigation, exploration, test, or study of the Site and contiguous areas required by the Bidding Requirements or Contract Documents to be conducted by or for Contractor prior to Contractor's making such final commitment; or

   c. Contractor failed to give the written notice as required by Paragraph 4.03.A.

3. If Owner and Contractor are unable to agree on entitlement to or on the amount or extent, if any, of any adjustment in the Contract Price or Contract Times, or both, a Claim may be made therefor as provided in Paragraph 10.05. However, neither Owner or Engineer, or any of their officers, directors, members, partners, employees, agents, consultants, or subcontractors shall be liable to Contractor for any claims, costs, losses, or damages (including but not limited to all fees and charges of engineers, architects, attorneys, and other professionals and all court or arbitration or other dispute resolution costs) sustained by Contractor on or in connection with any other project or anticipated project.


**Copyright © 2007 National Society of Professional Engineers for EJCDC. All rights reserved.**

4.04 *Underground Facilities*

A. *Shown or Indicated:* The information and data shown or indicated in the Contract Documents with respect to existing Underground Facilities at or contiguous to the Site is based on information and data furnished to Owner or Engineer by the owners of such Underground Facilities, including Owner, or by others. Unless it is otherwise expressly provided in the Supplementary Conditions:

1. Owner and Engineer shall not be responsible for the accuracy or completeness of any such information or data provided by others; and

2. the cost of all of the following will be included in the Contract Price, and Contractor shall have full responsibility for:

   a. reviewing and checking all such information and data;

   b. locating all Underground Facilities shown or indicated in the Contract Documents;

   c. coordination of the Work with the owners of such Underground Facilities, including Owner, during construction; and

   d. the safety and protection of all such Underground Facilities and repairing any damage thereto resulting from the Work.

B. *Not Shown or Indicated:*

1. If an Underground Facility is uncovered or revealed at or contiguous to the Site which was not shown or indicated, or not shown or indicated with reasonable accuracy in the Contract Documents, Contractor shall, promptly after becoming aware thereof and before further disturbing conditions affected thereby or performing any Work in connection therewith (except in an emergency as required by Paragraph 6.16.A), identify the owner of such Underground Facility and give written notice to that owner and to Owner and Engineer. Engineer will promptly review the Underground Facility and determine the extent, if any, to which a change is required in the Contract Documents to reflect and document the consequences of the existence or location of the Underground Facility. During such time, Contractor shall be responsible for the safety and protection of such Underground Facility.

2. If Engineer concludes that a change in the Contract Documents is required, a Work Change Directive or a Change Order will be issued to reflect and document such consequences. An equitable adjustment shall be made in the Contract Price or Contract Times, or both, to the extent that they are attributable to the existence or location of any Underground Facility that was not shown or indicated or not shown or indicated with reasonable accuracy in the Contract Documents and that Contractor did not know of and could not reasonably have been expected to be aware of or to have anticipated. If Owner and Contractor are unable to agree on entitlement to or on the amount or extent, if any, of any such adjustment in Contract Price or Contract Times, Owner or Contractor may make a Claim therefor as provided in Paragraph 10.05.


**Copyright © 2007 National Society of Professional Engineers for EJCDC. All rights reserved.**

4.05 *Reference Points*

A. Owner shall provide engineering surveys to establish reference points for construction which in Engineer's judgment are necessary to enable Contractor to proceed with the Work. Contractor shall be responsible for laying out the Work, shall protect and preserve the established reference points and property monuments, and shall make no changes or relocations without the prior written approval of Owner. Contractor shall report to Engineer whenever any reference point or property monument is lost or destroyed or requires relocation because of necessary changes in grades or locations, and shall be responsible for the accurate replacement or relocation of such reference points or property monuments by professionally qualified personnel.

4.06 *Hazardous Environmental Condition at Site*

A. *Reports and Drawings:* The Supplementary Conditions identify those reports and drawings known to Owner relating to Hazardous Environmental Conditions that have been identified at the Site.

B. *Limited Reliance by Contractor on Technical Data Authorized:* Contractor may rely upon the accuracy of the "technical data" contained in such reports and drawings, but such reports and drawings are not Contract Documents. Such "technical data" is identified in the Supplementary Conditions. Except for such reliance on such "technical data," Contractor may not rely upon or make any claim against Owner or Engineer, or any of their officers, directors, members, partners, employees, agents, consultants, or subcontractors with respect to:

1. the completeness of such reports and drawings for Contractor's purposes, including, but not limited to, any aspects of the means, methods, techniques, sequences and procedures of construction to be employed by Contractor and safety precautions and programs incident thereto; or

2. other data, interpretations, opinions and information contained in such reports or shown or indicated in such drawings; or

3. any Contractor interpretation of or conclusion drawn from any "technical data" or any such other data, interpretations, opinions or information.

C. Contractor shall not be responsible for any Hazardous Environmental Condition uncovered or revealed at the Site which was not shown or indicated in Drawings or Specifications or identified in the Contract Documents to be within the scope of the Work. Contractor shall be responsible for a Hazardous Environmental Condition created with any materials brought to the Site by Contractor, Subcontractors, Suppliers, or anyone else for whom Contractor is responsible.

D. If Contractor encounters a Hazardous Environmental Condition or if Contractor or anyone for whom Contractor is responsible creates a Hazardous Environmental Condition, Contractor shall immediately: (i) secure or otherwise isolate such condition; (ii) stop all Work in connection with such condition and in any area affected thereby (except in an emergency as required by Paragraph 6.16.A); and (iii) notify Owner and Engineer (and promptly thereafter confirm such notice in writing). Owner shall promptly consult with Engineer concerning the necessity for Owner to retain a qualified expert to evaluate such condition or take corrective action, if any. Promptly after consulting with Engineer, Owner shall take such actions as are necessary to


**Copyright © 2007 National Society of Professional Engineers for EJCDC. All rights reserved.**

permit Owner to timely obtain required permits and provide Contractor the written notice required by Paragraph 4.06.E.

E. Contractor shall not be required to resume Work in connection with such condition or in any affected area until after Owner has obtained any required permits related thereto and delivered written notice to Contractor: (i) specifying that such condition and any affected area is or has been rendered safe for the resumption of Work; or (ii) specifying any special conditions under which such Work may be resumed safely. If Owner and Contractor cannot agree as to entitlement to or on the amount or extent, if any, of any adjustment in Contract Price or Contract Times, or both, as a result of such Work stoppage or such special conditions under which Work is agreed to be resumed by Contractor, either party may make a Claim therefor as provided in Paragraph 10.05.

F. If after receipt of such written notice Contractor does not agree to resume such Work based on a reasonable belief it is unsafe, or does not agree to resume such Work under such special conditions, then Owner may order the portion of the Work that is in the area affected by such condition to be deleted from the Work. If Owner and Contractor cannot agree as to entitlement to or on the amount or extent, if any, of an adjustment in Contract Price or Contract Times as a result of deleting such portion of the Work, then either party may make a Claim therefor as provided in Paragraph 10.05. Owner may have such deleted portion of the Work performed by Owner's own forces or others in accordance with Article 7.

G. To the fullest extent permitted by Laws and Regulations, Owner shall indemnify and hold harmless Contractor, Subcontractors, and Engineer, and the officers, directors, members, partners, employees, agents, consultants, and subcontractors of each and any of them from and against all claims, costs, losses, and damages (including but not limited to all fees and charges of engineers, architects, attorneys, and other professionals and all court or arbitration or other dispute resolution costs) arising out of or relating to a Hazardous Environmental Condition, provided that such Hazardous Environmental Condition: (i) was not shown or indicated in the Drawings or Specifications or identified in the Contract Documents to be included within the scope of the Work, and (ii) was not created by Contractor or by anyone for whom Contractor is responsible. Nothing in this Paragraph 4.06.G shall obligate Owner to indemnify any individual or entity from and against the consequences of that individual's or entity's own negligence.

H. To the fullest extent permitted by Laws and Regulations, Contractor shall indemnify and hold harmless Owner and Engineer, and the officers, directors, members, partners, employees, agents, consultants, and subcontractors of each and any of them from and against all claims, costs, losses, and damages (including but not limited to all fees and charges of engineers, architects, attorneys, and other professionals and all court or arbitration or other dispute resolution costs) arising out of or relating to a Hazardous Environmental Condition created by Contractor or by anyone for whom Contractor is responsible. Nothing in this Paragraph 4.06.H shall obligate Contractor to indemnify any individual or entity from and against the consequences of that individual's or entity's own negligence.

I. The provisions of Paragraphs 4.02, 4.03, and 4.04 do not apply to a Hazardous Environmental Condition uncovered or revealed at the Site.


**Copyright © 2007 National Society of Professional Engineers for EJCDC. All rights reserved.**

## ARTICLE 5 – BONDS AND INSURANCE

5.01 *Performance, Payment, and Other Bonds*

A. Contractor shall furnish performance and payment bonds, each in an amount at least equal to the Contract Price as security for the faithful performance and payment of all of Contractor's obligations under the Contract Documents. These bonds shall remain in effect until one year after the date when final payment becomes due or until completion of the correction period specified in Paragraph 13.07, whichever is later, except as provided otherwise by Laws or Regulations or by the Contract Documents. Contractor shall also furnish such other bonds as are required by the Contract Documents.

B. All bonds shall be in the form prescribed by the Contract Documents except as provided otherwise by Laws or Regulations, and shall be executed by such sureties as are named in the list of "Companies Holding Certificates of Authority as Acceptable Sureties on Federal Bonds and as Acceptable Reinsuring Companies" as published in Circular 570 (amended) by the Financial Management Service, Surety Bond Branch, U.S. Department of the Treasury. All bonds signed by an agent or attorney-in-fact must be accompanied by a certified copy of that individual's authority to bind the surety. The evidence of authority shall show that it is effective on the date the agent or attorney-in-fact signed each bond.

C. If the surety on any bond furnished by Contractor is declared bankrupt or becomes insolvent or its right to do business is terminated in any state where any part of the Project is located or it ceases to meet the requirements of Paragraph 5.01.B, Contractor shall promptly notify Owner and Engineer and shall, within 20 days after the event giving rise to such notification, provide another bond and surety, both of which shall comply with the requirements of Paragraphs 5.01.B and 5.02.

5.02 *Licensed Sureties and Insurers*

A. All bonds and insurance required by the Contract Documents to be purchased and maintained by Owner or Contractor shall be obtained from surety or insurance companies that are duly licensed or authorized in the jurisdiction in which the Project is located to issue bonds or insurance policies for the limits and coverages so required. Such surety and insurance companies shall also meet such additional requirements and qualifications as may be provided in the Supplementary Conditions.

5.03 *Certificates of Insurance*

A. Contractor shall deliver to Owner, with copies to each additional insured and loss payee identified in the Supplementary Conditions, certificates of insurance (and other evidence of insurance requested by Owner or any other additional insured) which Contractor is required to purchase and maintain.

B. Owner shall deliver to Contractor, with copies to each additional insured and loss payee identified in the Supplementary Conditions, certificates of insurance (and other evidence of insurance requested by Contractor or any other additional insured) which Owner is required to purchase and maintain.


**Copyright © 2007 National Society of Professional Engineers for EJCDC. All rights reserved.**

C. Failure of Owner to demand such certificates or other evidence of Contractor's full compliance with these insurance requirements or failure of Owner to identify a deficiency in compliance from the evidence provided shall not be construed as a waiver of Contractor's obligation to maintain such insurance.

D. Owner does not represent that insurance coverage and limits established in this Contract necessarily will be adequate to protect Contractor.

E. The insurance and insurance limits required herein shall not be deemed as a limitation on Contractor's liability under the indemnities granted to Owner in the Contract Documents.

5.04 *Contractor's Insurance*

A. Contractor shall purchase and maintain such insurance as is appropriate for the Work being performed and as will provide protection from claims set forth below which may arise out of or result from Contractor's performance of the Work and Contractor's other obligations under the Contract Documents, whether it is to be performed by Contractor, any Subcontractor or Supplier, or by anyone directly or indirectly employed by any of them to perform any of the Work, or by anyone for whose acts any of them may be liable:

1. claims under workers' compensation, disability benefits, and other similar employee benefit acts;

2. claims for damages because of bodily injury, occupational sickness or disease, or death of Contractor's employees;

3. claims for damages because of bodily injury, sickness or disease, or death of any person other than Contractor's employees;

4. claims for damages insured by reasonably available personal injury liability coverage which are sustained:

   a. by any person as a result of an offense directly or indirectly related to the employment of such person by Contractor, or

   b. by any other person for any other reason;

5. claims for damages, other than to the Work itself, because of injury to or destruction of tangible property wherever located, including loss of use resulting therefrom; and

6. claims for damages because of bodily injury or death of any person or property damage arising out of the ownership, maintenance or use of any motor vehicle.

B. The policies of insurance required by this Paragraph 5.04 shall:

1. with respect to insurance required by Paragraphs 5.04.A.3 through 5.04.A.6 inclusive, be written on an occurrence basis, include as additional insureds (subject to any customary exclusion regarding professional liability) Owner and Engineer, and any other individuals or entities identified in the Supplementary Conditions, all of whom shall be listed as additional insureds, and include coverage for the respective officers, directors, members, partners,


**Copyright © 2007 National Society of Professional Engineers for EJCDC. All rights reserved.**

employees, agents, consultants, and subcontractors of each and any of all such additional insureds, and the insurance afforded to these additional insureds shall provide primary coverage for all claims covered thereby;

2. include at least the specific coverages and be written for not less than the limits of liability provided in the Supplementary Conditions or required by Laws or Regulations, whichever is greater;

3. include contractual liability insurance covering Contractor's indemnity obligations under Paragraphs 6.11 and 6.20;

4. contain a provision or endorsement that the coverage afforded will not be canceled, materially changed or renewal refused until at least 30 days prior written notice has been given to Owner and Contractor and to each other additional insured identified in the Supplementary Conditions to whom a certificate of insurance has been issued (and the certificates of insurance furnished by the Contractor pursuant to Paragraph 5.03 will so provide);

5. remain in effect at least until final payment and at all times thereafter when Contractor may be correcting, removing, or replacing defective Work in accordance with Paragraph 13.07; and

6. include completed operations coverage:

   a. Such insurance shall remain in effect for two years after final payment.

   b. Contractor shall furnish Owner and each other additional insured identified in the Supplementary Conditions, to whom a certificate of insurance has been issued, evidence satisfactory to Owner and any such additional insured of continuation of such insurance at final payment and one year thereafter.

5.05 *Owner's Liability Insurance*

A. In addition to the insurance required to be provided by Contractor under Paragraph 5.04, Owner, at Owner's option, may purchase and maintain at Owner's expense Owner's own liability insurance as will protect Owner against claims which may arise from operations under the Contract Documents.

5.06 *Property Insurance*

A. Unless otherwise provided in the Supplementary Conditions, Owner shall purchase and maintain property insurance upon the Work at the Site in the amount of the full replacement cost thereof (subject to such deductible amounts as may be provided in the Supplementary Conditions or required by Laws and Regulations). This insurance shall:

1. include the interests of Owner, Contractor, Subcontractors, and Engineer, and any other individuals or entities identified in the Supplementary Conditions, and the officers, directors, members, partners, employees, agents, consultants, and subcontractors of each and any of


**Copyright © 2007 National Society of Professional Engineers for EJCDC. All rights reserved.**

them, each of whom is deemed to have an insurable interest and shall be listed as a loss payee;

2. be written on a Builder's Risk "all-risk" policy form that shall at least include insurance for physical loss or damage to the Work, temporary buildings, falsework, and materials and equipment in transit, and shall insure against at least the following perils or causes of loss: fire, lightning, extended coverage, theft, vandalism and malicious mischief, earthquake, collapse, debris removal, demolition occasioned by enforcement of Laws and Regulations, water damage (other than that caused by flood), and such other perils or causes of loss as may be specifically required by the Supplementary Conditions.

3. include expenses incurred in the repair or replacement of any insured property (including but not limited to fees and charges of engineers and architects);

4. cover materials and equipment stored at the Site or at another location that was agreed to in writing by Owner prior to being incorporated in the Work, provided that such materials and equipment have been included in an Application for Payment recommended by Engineer;

5. allow for partial utilization of the Work by Owner;

6. include testing and startup; and

7. be maintained in effect until final payment is made unless otherwise agreed to in writing by Owner, Contractor, and Engineer with 30 days written notice to each other loss payee to whom a certificate of insurance has been issued.

B. Owner shall purchase and maintain such equipment breakdown insurance or additional property insurance as may be required by the Supplementary Conditions or Laws and Regulations which will include the interests of Owner, Contractor, Subcontractors, and Engineer, and any other individuals or entities identified in the Supplementary Conditions, and the officers, directors, members, partners, employees, agents, consultants and subcontractors of each and any of them, each of whom is deemed to have an insurable interest and shall be listed as a loss payee.

C. All the policies of insurance (and the certificates or other evidence thereof) required to be purchased and maintained in accordance with this Paragraph 5.06 will contain a provision or endorsement that the coverage afforded will not be canceled or materially changed or renewal refused until at least 30 days prior written notice has been given to Owner and Contractor and to each other loss payee to whom a certificate of insurance has been issued and will contain waiver provisions in accordance with Paragraph 5.07.

D. Owner shall not be responsible for purchasing and maintaining any property insurance specified in this Paragraph 5.06 to protect the interests of Contractor, Subcontractors, or others in the Work to the extent of any deductible amounts that are identified in the Supplementary Conditions. The risk of loss within such identified deductible amount will be borne by Contractor, Subcontractors, or others suffering any such loss, and if any of them wishes property insurance coverage within the limits of such amounts, each may purchase and maintain it at the purchaser's own expense.


**Copyright © 2007 National Society of Professional Engineers for EJCDC. All rights reserved.**

E. If Contractor requests in writing that other special insurance be included in the property insurance policies provided under this Paragraph 5.06, Owner shall, if possible, include such insurance, and the cost thereof will be charged to Contractor by appropriate Change Order. Prior to commencement of the Work at the Site, Owner shall in writing advise Contractor whether or not such other insurance has been procured by Owner.

5.07 *Waiver of Rights*

A. Owner and Contractor intend that all policies purchased in accordance with Paragraph 5.06 will protect Owner, Contractor, Subcontractors, and Engineer, and all other individuals or entities identified in the Supplementary Conditions as loss payees (and the officers, directors, members, partners, employees, agents, consultants, and subcontractors of each and any of them) in such policies and will provide primary coverage for all losses and damages caused by the perils or causes of loss covered thereby. All such policies shall contain provisions to the effect that in the event of payment of any loss or damage the insurers will have no rights of recovery against any of the insureds or loss payees thereunder. Owner and Contractor waive all rights against each other and their respective officers, directors, members, partners, employees, agents, consultants and subcontractors of each and any of them for all losses and damages caused by, arising out of or resulting from any of the perils or causes of loss covered by such policies and any other property insurance applicable to the Work; and, in addition, waive all such rights against Subcontractors and Engineer, and all other individuals or entities identified in the Supplementary Conditions as loss payees (and the officers, directors, members, partners, employees, agents, consultants, and subcontractors of each and any of them) under such policies for losses and damages so caused. None of the above waivers shall extend to the rights that any party making such waiver may have to the proceeds of insurance held by Owner as trustee or otherwise payable under any policy so issued.

B. Owner waives all rights against Contractor, Subcontractors, and Engineer, and the officers, directors, members, partners, employees, agents, consultants and subcontractors of each and any of them for:

1. loss due to business interruption, loss of use, or other consequential loss extending beyond direct physical loss or damage to Owner's property or the Work caused by, arising out of, or resulting from fire or other perils whether or not insured by Owner; and

2. loss or damage to the completed Project or part thereof caused by, arising out of, or resulting from fire or other insured peril or cause of loss covered by any property insurance maintained on the completed Project or part thereof by Owner during partial utilization pursuant to Paragraph 14.05, after Substantial Completion pursuant to Paragraph 14.04, or after final payment pursuant to Paragraph 14.07.

C. Any insurance policy maintained by Owner covering any loss, damage or consequential loss referred to in Paragraph 5.07.B shall contain provisions to the effect that in the event of payment of any such loss, damage, or consequential loss, the insurers will have no rights of recovery against Contractor, Subcontractors, or Engineer, and the officers, directors, members, partners, employees, agents, consultants and subcontractors of each and any of them.


**Copyright © 2007 National Society of Professional Engineers for EJCDC. All rights reserved.**

5.08 *Receipt and Application of Insurance Proceeds*

A. Any insured loss under the policies of insurance required by Paragraph 5.06 will be adjusted with Owner and made payable to Owner as fiduciary for the loss payees, as their interests may appear, subject to the requirements of any applicable mortgage clause and of Paragraph 5.08.B. Owner shall deposit in a separate account any money so received and shall distribute it in accordance with such agreement as the parties in interest may reach. If no other special agreement is reached, the damaged Work shall be repaired or replaced, the moneys so received applied on account thereof, and the Work and the cost thereof covered by an appropriate Change Order.

B. Owner as fiduciary shall have power to adjust and settle any loss with the insurers unless one of the parties in interest shall object in writing within 15 days after the occurrence of loss to Owner's exercise of this power. If such objection be made, Owner as fiduciary shall make settlement with the insurers in accordance with such agreement as the parties in interest may reach. If no such agreement among the parties in interest is reached, Owner as fiduciary shall adjust and settle the loss with the insurers and, if required in writing by any party in interest, Owner as fiduciary shall give bond for the proper performance of such duties.

5.09 *Acceptance of Bonds and Insurance; Option to Replace*

A. If either Owner or Contractor has any objection to the coverage afforded by or other provisions of the bonds or insurance required to be purchased and maintained by the other party in accordance with Article 5 on the basis of non-conformance with the Contract Documents, the objecting party shall so notify the other party in writing within 10 days after receipt of the certificates (or other evidence requested) required by Paragraph 2.01.B. Owner and Contractor shall each provide to the other such additional information in respect of insurance provided as the other may reasonably request. If either party does not purchase or maintain all of the bonds and insurance required of such party by the Contract Documents, such party shall notify the other party in writing of such failure to purchase prior to the start of the Work, or of such failure to maintain prior to any change in the required coverage. Without prejudice to any other right or remedy, the other party may elect to obtain equivalent bonds or insurance to protect such other party's interests at the expense of the party who was required to provide such coverage, and a Change Order shall be issued to adjust the Contract Price accordingly.

5.10 *Partial Utilization, Acknowledgment of Property Insurer*

A. If Owner finds it necessary to occupy or use a portion or portions of the Work prior to Substantial Completion of all the Work as provided in Paragraph 14.05, no such use or occupancy shall commence before the insurers providing the property insurance pursuant to Paragraph 5.06 have acknowledged notice thereof and in writing effected any changes in coverage necessitated thereby. The insurers providing the property insurance shall consent by endorsement on the policy or policies, but the property insurance shall not be canceled or permitted to lapse on account of any such partial use or occupancy.


**Copyright © 2007 National Society of Professional Engineers for EJCDC. All rights reserved.**

## ARTICLE 6 – CONTRACTOR'S RESPONSIBILITIES

6.01 *Supervision and Superintendence*

A. Contractor shall supervise, inspect, and direct the Work competently and efficiently, devoting such attention thereto and applying such skills and expertise as may be necessary to perform the Work in accordance with the Contract Documents. Contractor shall be solely responsible for the means, methods, techniques, sequences, and procedures of construction. Contractor shall not be responsible for the negligence of Owner or Engineer in the design or specification of a specific means, method, technique, sequence, or procedure of construction which is shown or indicated in and expressly required by the Contract Documents.

B. At all times during the progress of the Work, Contractor shall assign a competent resident superintendent who shall not be replaced without written notice to Owner and Engineer except under extraordinary circumstances.

6.02 *Labor; Working Hours*

A. Contractor shall provide competent, suitably qualified personnel to survey and lay out the Work and perform construction as required by the Contract Documents. Contractor shall at all times maintain good discipline and order at the Site.

B. Except as otherwise required for the safety or protection of persons or the Work or property at the Site or adjacent thereto, and except as otherwise stated in the Contract Documents, all Work at the Site shall be performed during regular working hours. Contractor will not permit the performance of Work on a Saturday, Sunday, or any legal holiday without Owner's written consent (which will not be unreasonably withheld) given after prior written notice to Engineer.

6.03 *Services, Materials, and Equipment*

A. Unless otherwise specified in the Contract Documents, Contractor shall provide and assume full responsibility for all services, materials, equipment, labor, transportation, construction equipment and machinery, tools, appliances, fuel, power, light, heat, telephone, water, sanitary facilities, temporary facilities, and all other facilities and incidentals necessary for the performance, testing, start-up, and completion of the Work.

B. All materials and equipment incorporated into the Work shall be as specified or, if not specified, shall be of good quality and new, except as otherwise provided in the Contract Documents. All special warranties and guarantees required by the Specifications shall expressly run to the benefit of Owner. If required by Engineer, Contractor shall furnish satisfactory evidence (including reports of required tests) as to the source, kind, and quality of materials and equipment.

C. All materials and equipment shall be stored, applied, installed, connected, erected, protected, used, cleaned, and conditioned in accordance with instructions of the applicable Supplier, except as otherwise may be provided in the Contract Documents.


**Copyright © 2007 National Society of Professional Engineers for EJCDC. All rights reserved.**

6.04 *Progress Schedule*

A. Contractor shall adhere to the Progress Schedule established in accordance with Paragraph 2.07 as it may be adjusted from time to time as provided below.

1. Contractor shall submit to Engineer for acceptance (to the extent indicated in Paragraph 2.07) proposed adjustments in the Progress Schedule that will not result in changing the Contract Times. Such adjustments will comply with any provisions of the General Requirements applicable thereto.

2. Proposed adjustments in the Progress Schedule that will change the Contract Times shall be submitted in accordance with the requirements of Article 12. Adjustments in Contract Times may only be made by a Change Order.

6.05 *Substitutes and "Or-Equals"*

A. Whenever an item of material or equipment is specified or described in the Contract Documents by using the name of a proprietary item or the name of a particular Supplier, the specification or description is intended to establish the type, function, appearance, and quality required. Unless the specification or description contains or is followed by words reading that no like, equivalent, or "or-equal" item or no substitution is permitted, other items of material or equipment or material or equipment of other Suppliers may be submitted to Engineer for review under the circumstances described below.

1. *"Or-Equal" Items:* If in Engineer's sole discretion an item of material or equipment proposed by Contractor is functionally equal to that named and sufficiently similar so that no change in related Work will be required, it may be considered by Engineer as an "or-equal" item, in which case review and approval of the proposed item may, in Engineer's sole discretion, be accomplished without compliance with some or all of the requirements for approval of proposed substitute items. For the purposes of this Paragraph 6.05.A.1, a proposed item of material or equipment will be considered functionally equal to an item so named if:

a. in the exercise of reasonable judgment Engineer determines that:

1) it is at least equal in materials of construction, quality, durability, appearance, strength, and design characteristics;

2) it will reliably perform at least equally well the function and achieve the results imposed by the design concept of the completed Project as a functioning whole; and

3) it has a proven record of performance and availability of responsive service.

b. Contractor certifies that, if approved and incorporated into the Work:

1) there will be no increase in cost to the Owner or increase in Contract Times; and

2) it will conform substantially to the detailed requirements of the item named in the Contract Documents.


**Copyright © 2007 National Society of Professional Engineers for EJCDC. All rights reserved.**

2. *Substitute Items:*

a. If in Engineer's sole discretion an item of material or equipment proposed by Contractor does not qualify as an "or-equal" item under Paragraph 6.05.A.1, it will be considered a proposed substitute item.

b. Contractor shall submit sufficient information as provided below to allow Engineer to determine if the item of material or equipment proposed is essentially equivalent to that named and an acceptable substitute therefor. Requests for review of proposed substitute items of material or equipment will not be accepted by Engineer from anyone other than Contractor.

c. The requirements for review by Engineer will be as set forth in Paragraph 6.05.A.2.d, as supplemented by the General Requirements, and as Engineer may decide is appropriate under the circumstances.

d. Contractor shall make written application to Engineer for review of a proposed substitute item of material or equipment that Contractor seeks to furnish or use. The application:

1) shall certify that the proposed substitute item will:

a) perform adequately the functions and achieve the results called for by the general design,

b) be similar in substance to that specified, and

c) be suited to the same use as that specified;

2) will state:

a) the extent, if any, to which the use of the proposed substitute item will prejudice Contractor's achievement of Substantial Completion on time,

b) whether use of the proposed substitute item in the Work will require a change in any of the Contract Documents (or in the provisions of any other direct contract with Owner for other work on the Project) to adapt the design to the proposed substitute item, and

c) whether incorporation or use of the proposed substitute item in connection with the Work is subject to payment of any license fee or royalty;

3) will identify:

a) all variations of the proposed substitute item from that specified, and

b) available engineering, sales, maintenance, repair, and replacement services; and

4) shall contain an itemized estimate of all costs or credits that will result directly or indirectly from use of such substitute item, including costs of redesign and claims of other contractors affected by any resulting change.


**Copyright © 2007 National Society of Professional Engineers for EJCDC. All rights reserved.**

B. *Substitute Construction Methods or Procedures:* If a specific means, method, technique, sequence, or procedure of construction is expressly required by the Contract Documents, Contractor may furnish or utilize a substitute means, method, technique, sequence, or procedure of construction approved by Engineer. Contractor shall submit sufficient information to allow Engineer, in Engineer's sole discretion, to determine that the substitute proposed is equivalent to that expressly called for by the Contract Documents. The requirements for review by Engineer will be similar to those provided in Paragraph 6.05.A.2.

C. *Engineer's Evaluation:* Engineer will be allowed a reasonable time within which to evaluate each proposal or submittal made pursuant to Paragraphs 6.05.A and 6.05.B. Engineer may require Contractor to furnish additional data about the proposed substitute item. Engineer will be the sole judge of acceptability. No "or equal" or substitute will be ordered, installed or utilized until Engineer's review is complete, which will be evidenced by a Change Order in the case of a substitute and an approved Shop Drawing for an "or equal." Engineer will advise Contractor in writing of any negative determination.

D. *Special Guarantee:* Owner may require Contractor to furnish at Contractor's expense a special performance guarantee or other surety with respect to any substitute.

E. *Engineer's Cost Reimbursement*: Engineer will record Engineer's costs in evaluating a substitute proposed or submitted by Contractor pursuant to Paragraphs 6.05.A.2 and 6.05.B. Whether or not Engineer approves a substitute so proposed or submitted by Contractor, Contractor shall reimburse Owner for the reasonable charges of Engineer for evaluating each such proposed substitute. Contractor shall also reimburse Owner for the reasonable charges of Engineer for making changes in the Contract Documents (or in the provisions of any other direct contract with Owner) resulting from the acceptance of each proposed substitute.

F. *Contractor's Expense*: Contractor shall provide all data in support of any proposed substitute or "or-equal" at Contractor's expense.

6.06 *Concerning Subcontractors, Suppliers, and Others*

A. Contractor shall not employ any Subcontractor, Supplier, or other individual or entity (including those acceptable to Owner as indicated in Paragraph 6.06.B), whether initially or as a replacement, against whom Owner may have reasonable objection. Contractor shall not be required to employ any Subcontractor, Supplier, or other individual or entity to furnish or perform any of the Work against whom Contractor has reasonable objection.

B. If the Supplementary Conditions require the identity of certain Subcontractors, Suppliers, or other individuals or entities to be submitted to Owner in advance for acceptance by Owner by a specified date prior to the Effective Date of the Agreement, and if Contractor has submitted a list thereof in accordance with the Supplementary Conditions, Owner's acceptance (either in writing or by failing to make written objection thereto by the date indicated for acceptance or objection in the Bidding Documents or the Contract Documents) of any such Subcontractor, Supplier, or other individual or entity so identified may be revoked on the basis of reasonable objection after due investigation. Contractor shall submit an acceptable replacement for the rejected Subcontractor, Supplier, or other individual or entity, and the Contract Price will be adjusted by the difference in the cost occasioned by such replacement, and an appropriate Change Order will be issued. No acceptance by Owner of any such Subcontractor, Supplier, or other individual or


**Copyright © 2007 National Society of Professional Engineers for EJCDC. All rights reserved.**

entity, whether initially or as a replacement, shall constitute a waiver of any right of Owner or Engineer to reject defective Work.

C. Contractor shall be fully responsible to Owner and Engineer for all acts and omissions of the Subcontractors, Suppliers, and other individuals or entities performing or furnishing any of the Work just as Contractor is responsible for Contractor's own acts and omissions. Nothing in the Contract Documents:

1. shall create for the benefit of any such Subcontractor, Supplier, or other individual or entity any contractual relationship between Owner or Engineer and any such Subcontractor, Supplier or other individual or entity; nor

2. shall create any obligation on the part of Owner or Engineer to pay or to see to the payment of any moneys due any such Subcontractor, Supplier, or other individual or entity except as may otherwise be required by Laws and Regulations.

D. Contractor shall be solely responsible for scheduling and coordinating the Work of Subcontractors, Suppliers, and other individuals or entities performing or furnishing any of the Work under a direct or indirect contract with Contractor.

E. Contractor shall require all Subcontractors, Suppliers, and such other individuals or entities performing or furnishing any of the Work to communicate with Engineer through Contractor.

F. The divisions and sections of the Specifications and the identifications of any Drawings shall not control Contractor in dividing the Work among Subcontractors or Suppliers or delineating the Work to be performed by any specific trade.

G. All Work performed for Contractor by a Subcontractor or Supplier will be pursuant to an appropriate agreement between Contractor and the Subcontractor or Supplier which specifically binds the Subcontractor or Supplier to the applicable terms and conditions of the Contract Documents for the benefit of Owner and Engineer. Whenever any such agreement is with a Subcontractor or Supplier who is listed as a loss payee on the property insurance provided in Paragraph 5.06, the agreement between the Contractor and the Subcontractor or Supplier will contain provisions whereby the Subcontractor or Supplier waives all rights against Owner, Contractor, Engineer, and all other individuals or entities identified in the Supplementary Conditions to be listed as insureds or loss payees (and the officers, directors, members, partners, employees, agents, consultants, and subcontractors of each and any of them) for all losses and damages caused by, arising out of, relating to, or resulting from any of the perils or causes of loss covered by such policies and any other property insurance applicable to the Work. If the insurers on any such policies require separate waiver forms to be signed by any Subcontractor or Supplier, Contractor will obtain the same.

6.07 *Patent Fees and Royalties*

A. Contractor shall pay all license fees and royalties and assume all costs incident to the use in the performance of the Work or the incorporation in the Work of any invention, design, process, product, or device which is the subject of patent rights or copyrights held by others. If a particular invention, design, process, product, or device is specified in the Contract Documents for use in the performance of the Work and if, to the actual knowledge of Owner or Engineer, its


**Copyright © 2007 National Society of Professional Engineers for EJCDC. All rights reserved.**

use is subject to patent rights or copyrights calling for the payment of any license fee or royalty to others, the existence of such rights shall be disclosed by Owner in the Contract Documents.

B. To the fullest extent permitted by Laws and Regulations, Owner shall indemnify and hold harmless Contractor, and its officers, directors, members, partners, employees, agents, consultants, and subcontractors from and against all claims, costs, losses, and damages (including but not limited to all fees and charges of engineers, architects, attorneys, and other professionals, and all court or arbitration or other dispute resolution costs) arising out of or relating to any infringement of patent rights or copyrights incident to the use in the performance of the Work or resulting from the incorporation in the Work of any invention, design, process, product, or device specified in the Contract Documents, but not identified as being subject to payment of any license fee or royalty to others required by patent rights or copyrights.

C. To the fullest extent permitted by Laws and Regulations, Contractor shall indemnify and hold harmless Owner and Engineer, and the officers, directors, members, partners, employees, agents, consultants and subcontractors of each and any of them from and against all claims, costs, losses, and damages (including but not limited to all fees and charges of engineers, architects, attorneys, and other professionals and all court or arbitration or other dispute resolution costs) arising out of or relating to any infringement of patent rights or copyrights incident to the use in the performance of the Work or resulting from the incorporation in the Work of any invention, design, process, product, or device not specified in the Contract Documents.

6.08 *Permits*

A. Unless otherwise provided in the Supplementary Conditions, Contractor shall obtain and pay for all construction permits and licenses. Owner shall assist Contractor, when necessary, in obtaining such permits and licenses. Contractor shall pay all governmental charges and inspection fees necessary for the prosecution of the Work which are applicable at the time of opening of Bids, or, if there are no Bids, on the Effective Date of the Agreement. Owner shall pay all charges of utility owners for connections for providing permanent service to the Work.

6.09 *Laws and Regulations*

A. Contractor shall give all notices required by and shall comply with all Laws and Regulations applicable to the performance of the Work. Except where otherwise expressly required by applicable Laws and Regulations, neither Owner nor Engineer shall be responsible for monitoring Contractor's compliance with any Laws or Regulations.

B. If Contractor performs any Work knowing or having reason to know that it is contrary to Laws or Regulations, Contractor shall bear all claims, costs, losses, and damages (including but not limited to all fees and charges of engineers, architects, attorneys, and other professionals and all court or arbitration or other dispute resolution costs) arising out of or relating to such Work. However, it shall not be Contractor's responsibility to make certain that the Specifications and Drawings are in accordance with Laws and Regulations, but this shall not relieve Contractor of Contractor's obligations under Paragraph 3.03.

C. Changes in Laws or Regulations not known at the time of opening of Bids (or, on the Effective Date of the Agreement if there were no Bids) having an effect on the cost or time of performance of the Work shall be the subject of an adjustment in Contract Price or Contract Times. If Owner


**Copyright © 2007 National Society of Professional Engineers for EJCDC. All rights reserved.**

and Contractor are unable to agree on entitlement to or on the amount or extent, if any, of any such adjustment, a Claim may be made therefor as provided in Paragraph 10.05.

6.10 *Taxes*

A. Contractor shall pay all sales, consumer, use, and other similar taxes required to be paid by Contractor in accordance with the Laws and Regulations of the place of the Project which are applicable during the performance of the Work.

6.11 *Use of Site and Other Areas*

A. *Limitation on Use of Site and Other Areas:*

1. Contractor shall confine construction equipment, the storage of materials and equipment, and the operations of workers to the Site and other areas permitted by Laws and Regulations, and shall not unreasonably encumber the Site and other areas with construction equipment or other materials or equipment. Contractor shall assume full responsibility for any damage to any such land or area, or to the owner or occupant thereof, or of any adjacent land or areas resulting from the performance of the Work.

2. Should any claim be made by any such owner or occupant because of the performance of the Work, Contractor shall promptly settle with such other party by negotiation or otherwise resolve the claim by arbitration or other dispute resolution proceeding or at law.

3. To the fullest extent permitted by Laws and Regulations, Contractor shall indemnify and hold harmless Owner and Engineer, and the officers, directors, members, partners, employees, agents, consultants and subcontractors of each and any of them from and against all claims, costs, losses, and damages (including but not limited to all fees and charges of engineers, architects, attorneys, and other professionals and all court or arbitration or other dispute resolution costs) arising out of or relating to any claim or action, legal or equitable, brought by any such owner or occupant against Owner, Engineer, or any other party indemnified hereunder to the extent caused by or based upon Contractor's performance of the Work.

B. *Removal of Debris During Performance of the Work:* During the progress of the Work Contractor shall keep the Site and other areas free from accumulations of waste materials, rubbish, and other debris. Removal and disposal of such waste materials, rubbish, and other debris shall conform to applicable Laws and Regulations.

C. *Cleaning:* Prior to Substantial Completion of the Work Contractor shall clean the Site and the Work and make it ready for utilization by Owner. At the completion of the Work Contractor shall remove from the Site all tools, appliances, construction equipment and machinery, and surplus materials and shall restore to original condition all property not designated for alteration by the Contract Documents.

D. *Loading Structures:* Contractor shall not load nor permit any part of any structure to be loaded in any manner that will endanger the structure, nor shall Contractor subject any part of the Work or adjacent property to stresses or pressures that will endanger it.


**Copyright © 2007 National Society of Professional Engineers for EJCDC. All rights reserved.**

6.12 *Record Documents*

A. Contractor shall maintain in a safe place at the Site one record copy of all Drawings, Specifications, Addenda, Change Orders, Work Change Directives, Field Orders, and written interpretations and clarifications in good order and annotated to show changes made during construction. These record documents together with all approved Samples and a counterpart of all approved Shop Drawings will be available to Engineer for reference. Upon completion of the Work, these record documents, Samples, and Shop Drawings will be delivered to Engineer for Owner.

6.13 *Safety and Protection*

A. Contractor shall be solely responsible for initiating, maintaining and supervising all safety precautions and programs in connection with the Work. Such responsibility does not relieve Subcontractors of their responsibility for the safety of persons or property in the performance of their work, nor for compliance with applicable safety Laws and Regulations. Contractor shall take all necessary precautions for the safety of, and shall provide the necessary protection to prevent damage, injury or loss to:

1. all persons on the Site or who may be affected by the Work;

2. all the Work and materials and equipment to be incorporated therein, whether in storage on or off the Site; and

3. other property at the Site or adjacent thereto, including trees, shrubs, lawns, walks, pavements, roadways, structures, utilities, and Underground Facilities not designated for removal, relocation, or replacement in the course of construction.

B. Contractor shall comply with all applicable Laws and Regulations relating to the safety of persons or property, or to the protection of persons or property from damage, injury, or loss; and shall erect and maintain all necessary safeguards for such safety and protection. Contractor shall notify owners of adjacent property and of Underground Facilities and other utility owners when prosecution of the Work may affect them, and shall cooperate with them in the protection, removal, relocation, and replacement of their property.

C. Contractor shall comply with the applicable requirements of Owner's safety programs, if any. The Supplementary Conditions identify any Owner's safety programs that are applicable to the Work.

D. Contractor shall inform Owner and Engineer of the specific requirements of Contractor's safety program with which Owner's and Engineer's employees and representatives must comply while at the Site.

E. All damage, injury, or loss to any property referred to in Paragraph 6.13.A.2 or 6.13.A.3 caused, directly or indirectly, in whole or in part, by Contractor, any Subcontractor, Supplier, or any other individual or entity directly or indirectly employed by any of them to perform any of the Work, or anyone for whose acts any of them may be liable, shall be remedied by Contractor (except damage or loss attributable to the fault of Drawings or Specifications or to the acts or omissions of Owner or Engineer or anyone employed by any of them, or anyone for whose acts


**Copyright © 2007 National Society of Professional Engineers for EJCDC. All rights reserved.**

any of them may be liable, and not attributable, directly or indirectly, in whole or in part, to the fault or negligence of Contractor or any Subcontractor, Supplier, or other individual or entity directly or indirectly employed by any of them).

F. Contractor's duties and responsibilities for safety and for protection of the Work shall continue until such time as all the Work is completed and Engineer has issued a notice to Owner and Contractor in accordance with Paragraph 14.07.B that the Work is acceptable (except as otherwise expressly provided in connection with Substantial Completion).

6.14 *Safety Representative*

A. Contractor shall designate a qualified and experienced safety representative at the Site whose duties and responsibilities shall be the prevention of accidents and the maintaining and supervising of safety precautions and programs.

6.15 *Hazard Communication Programs*

A. Contractor shall be responsible for coordinating any exchange of material safety data sheets or other hazard communication information required to be made available to or exchanged between or among employers at the Site in accordance with Laws or Regulations.

6.16 *Emergencies*

A. In emergencies affecting the safety or protection of persons or the Work or property at the Site or adjacent thereto, Contractor is obligated to act to prevent threatened damage, injury, or loss. Contractor shall give Engineer prompt written notice if Contractor believes that any significant changes in the Work or variations from the Contract Documents have been caused thereby or are required as a result thereof. If Engineer determines that a change in the Contract Documents is required because of the action taken by Contractor in response to such an emergency, a Work Change Directive or Change Order will be issued.

6.17 *Shop Drawings and Samples*

A. Contractor shall submit Shop Drawings and Samples to Engineer for review and approval in accordance with the accepted Schedule of Submittals (as required by Paragraph 2.07). Each submittal will be identified as Engineer may require.

1. *Shop Drawings:*

a. Submit number of copies specified in the General Requirements.

b. Data shown on the Shop Drawings will be complete with respect to quantities, dimensions, specified performance and design criteria, materials, and similar data to show Engineer the services, materials, and equipment Contractor proposes to provide and to enable Engineer to review the information for the limited purposes required by Paragraph 6.17.D.

2. *Samples:*

a. Submit number of Samples specified in the Specifications.


**Copyright © 2007 National Society of Professional Engineers for EJCDC. All rights reserved.**

b. Clearly identify each Sample as to material, Supplier, pertinent data such as catalog numbers, the use for which intended and other data as Engineer may require to enable Engineer to review the submittal for the limited purposes required by Paragraph 6.17.D.

B. Where a Shop Drawing or Sample is required by the Contract Documents or the Schedule of Submittals, any related Work performed prior to Engineer's review and approval of the pertinent submittal will be at the sole expense and responsibility of Contractor.

C. *Submittal Procedures:*

1. Before submitting each Shop Drawing or Sample, Contractor shall have:

a. reviewed and coordinated each Shop Drawing or Sample with other Shop Drawings and Samples and with the requirements of the Work and the Contract Documents;

b. determined and verified all field measurements, quantities, dimensions, specified performance and design criteria, installation requirements, materials, catalog numbers, and similar information with respect thereto;

c. determined and verified the suitability of all materials offered with respect to the indicated application, fabrication, shipping, handling, storage, assembly, and installation pertaining to the performance of the Work; and

d. determined and verified all information relative to Contractor's responsibilities for means, methods, techniques, sequences, and procedures of construction, and safety precautions and programs incident thereto.

2. Each submittal shall bear a stamp or specific written certification that Contractor has satisfied Contractor's obligations under the Contract Documents with respect to Contractor's review and approval of that submittal.

3. With each submittal, Contractor shall give Engineer specific written notice of any variations that the Shop Drawing or Sample may have from the requirements of the Contract Documents. This notice shall be both a written communication separate from the Shop Drawings or Sample submittal; and, in addition, by a specific notation made on each Shop Drawing or Sample submitted to Engineer for review and approval of each such variation.

D. *Engineer's Review:*

1. Engineer will provide timely review of Shop Drawings and Samples in accordance with the Schedule of Submittals acceptable to Engineer. Engineer's review and approval will be only to determine if the items covered by the submittals will, after installation or incorporation in the Work, conform to the information given in the Contract Documents and be compatible with the design concept of the completed Project as a functioning whole as indicated by the Contract Documents.

2. Engineer's review and approval will not extend to means, methods, techniques, sequences, or procedures of construction (except where a particular means, method, technique, sequence, or procedure of construction is specifically and expressly called for by the


**Copyright © 2007 National Society of Professional Engineers for EJCDC. All rights reserved.**

Contract Documents) or to safety precautions or programs incident thereto. The review and approval of a separate item as such will not indicate approval of the assembly in which the item functions.

3. Engineer's review and approval shall not relieve Contractor from responsibility for any variation from the requirements of the Contract Documents unless Contractor has complied with the requirements of Paragraph 6.17.C.3 and Engineer has given written approval of each such variation by specific written notation thereof incorporated in or accompanying the Shop Drawing or Sample. Engineer's review and approval shall not relieve Contractor from responsibility for complying with the requirements of Paragraph 6.17.C.1.

E. *Resubmittal Procedures:*

1. Contractor shall make corrections required by Engineer and shall return the required number of corrected copies of Shop Drawings and submit, as required, new Samples for review and approval. Contractor shall direct specific attention in writing to revisions other than the corrections called for by Engineer on previous submittals.

6.18 *Continuing the Work*

A. Contractor shall carry on the Work and adhere to the Progress Schedule during all disputes or disagreements with Owner. No Work shall be delayed or postponed pending resolution of any disputes or disagreements, except as permitted by Paragraph 15.04 or as Owner and Contractor may otherwise agree in writing.

6.19 *Contractor's General Warranty and Guarantee*

A. Contractor warrants and guarantees to Owner that all Work will be in accordance with the Contract Documents and will not be defective. Engineer and its officers, directors, members, partners, employees, agents, consultants, and subcontractors shall be entitled to rely on representation of Contractor's warranty and guarantee.

B. Contractor's warranty and guarantee hereunder excludes defects or damage caused by:

1. abuse, modification, or improper maintenance or operation by persons other than Contractor, Subcontractors, Suppliers, or any other individual or entity for whom Contractor is responsible; or

2. normal wear and tear under normal usage.

C. Contractor's obligation to perform and complete the Work in accordance with the Contract Documents shall be absolute. None of the following will constitute an acceptance of Work that is not in accordance with the Contract Documents or a release of Contractor's obligation to perform the Work in accordance with the Contract Documents:

1. observations by Engineer;

2. recommendation by Engineer or payment by Owner of any progress or final payment;


**Copyright © 2007 National Society of Professional Engineers for EJCDC. All rights reserved.**

3. the issuance of a certificate of Substantial Completion by Engineer or any payment related thereto by Owner;

4. use or occupancy of the Work or any part thereof by Owner;

5. any review and approval of a Shop Drawing or Sample submittal or the issuance of a notice of acceptability by Engineer;

6. any inspection, test, or approval by others; or

7. any correction of defective Work by Owner.

6.20 *Indemnification*

A. To the fullest extent permitted by Laws and Regulations, Contractor shall indemnify and hold harmless Owner and Engineer, and the officers, directors, members, partners, employees, agents, consultants and subcontractors of each and any of them from and against all claims, costs, losses, and damages (including but not limited to all fees and charges of engineers, architects, attorneys, and other professionals and all court or arbitration or other dispute resolution costs) arising out of or relating to the performance of the Work, provided that any such claim, cost, loss, or damage is attributable to bodily injury, sickness, disease, or death, or to injury to or destruction of tangible property (other than the Work itself), including the loss of use resulting therefrom but only to the extent caused by any negligent act or omission of Contractor, any Subcontractor, any Supplier, or any individual or entity directly or indirectly employed by any of them to perform any of the Work or anyone for whose acts any of them may be liable .

B. In any and all claims against Owner or Engineer or any of their officers, directors, members, partners, employees, agents, consultants, or subcontractors by any employee (or the survivor or personal representative of such employee) of Contractor, any Subcontractor, any Supplier, or any individual or entity directly or indirectly employed by any of them to perform any of the Work, or anyone for whose acts any of them may be liable, the indemnification obligation under Paragraph 6.20.A shall not be limited in any way by any limitation on the amount or type of damages, compensation, or benefits payable by or for Contractor or any such Subcontractor, Supplier, or other individual or entity under workers' compensation acts, disability benefit acts, or other employee benefit acts.

C. The indemnification obligations of Contractor under Paragraph 6.20.A shall not extend to the liability of Engineer and Engineer's officers, directors, members, partners, employees, agents, consultants and subcontractors arising out of:

1. the preparation or approval of, or the failure to prepare or approve maps, Drawings, opinions, reports, surveys, Change Orders, designs, or Specifications; or

2. giving directions or instructions, or failing to give them, if that is the primary cause of the injury or damage.


**Copyright © 2007 National Society of Professional Engineers for EJCDC. All rights reserved.**

6.21 *Delegation of Professional Design Services*

A. Contractor will not be required to provide professional design services unless such services are specifically required by the Contract Documents for a portion of the Work or unless such services are required to carry out Contractor's responsibilities for construction means, methods, techniques, sequences and procedures. Contractor shall not be required to provide professional services in violation of applicable law.

B. If professional design services or certifications by a design professional related to systems, materials or equipment are specifically required of Contractor by the Contract Documents, Owner and Engineer will specify all performance and design criteria that such services must satisfy. Contractor shall cause such services or certifications to be provided by a properly licensed professional, whose signature and seal shall appear on all drawings, calculations, specifications, certifications, Shop Drawings and other submittals prepared by such professional. Shop Drawings and other submittals related to the Work designed or certified by such professional, if prepared by others, shall bear such professional's written approval when submitted to Engineer.

C. Owner and Engineer shall be entitled to rely upon the adequacy, accuracy and completeness of the services, certifications or approvals performed by such design professionals, provided Owner and Engineer have specified to Contractor all performance and design criteria that such services must satisfy.

D. Pursuant to this Paragraph 6.21, Engineer's review and approval of design calculations and design drawings will be only for the limited purpose of checking for conformance with performance and design criteria given and the design concept expressed in the Contract Documents. Engineer's review and approval of Shop Drawings and other submittals (except design calculations and design drawings) will be only for the purpose stated in Paragraph 6.17.D.1.

E. Contractor shall not be responsible for the adequacy of the performance or design criteria required by the Contract Documents.

## ARTICLE 7 – OTHER WORK AT THE SITE

7.01 *Related Work at Site*

A. Owner may perform other work related to the Project at the Site with Owner's employees, or through other direct contracts therefor, or have other work performed by utility owners. If such other work is not noted in the Contract Documents, then:

1. written notice thereof will be given to Contractor prior to starting any such other work; and

2. if Owner and Contractor are unable to agree on entitlement to or on the amount or extent, if any, of any adjustment in the Contract Price or Contract Times that should be allowed as a result of such other work, a Claim may be made therefor as provided in Paragraph 10.05.

B. Contractor shall afford each other contractor who is a party to such a direct contract, each utility owner, and Owner, if Owner is performing other work with Owner's employees, proper and safe


**Copyright © 2007 National Society of Professional Engineers for EJCDC. All rights reserved.**

access to the Site, provide a reasonable opportunity for the introduction and storage of materials and equipment and the execution of such other work, and properly coordinate the Work with theirs. Contractor shall do all cutting, fitting, and patching of the Work that may be required to properly connect or otherwise make its several parts come together and properly integrate with such other work. Contractor shall not endanger any work of others by cutting, excavating, or otherwise altering such work; provided, however, that Contractor may cut or alter others' work with the written consent of Engineer and the others whose work will be affected. The duties and responsibilities of Contractor under this Paragraph are for the benefit of such utility owners and other contractors to the extent that there are comparable provisions for the benefit of Contractor in said direct contracts between Owner and such utility owners and other contractors.

C. If the proper execution or results of any part of Contractor's Work depends upon work performed by others under this Article 7, Contractor shall inspect such other work and promptly report to Engineer in writing any delays, defects, or deficiencies in such other work that render it unavailable or unsuitable for the proper execution and results of Contractor's Work. Contractor's failure to so report will constitute an acceptance of such other work as fit and proper for integration with Contractor's Work except for latent defects and deficiencies in such other work.

7.02 *Coordination*

A. If Owner intends to contract with others for the performance of other work on the Project at the Site, the following will be set forth in Supplementary Conditions:

1. the individual or entity who will have authority and responsibility for coordination of the activities among the various contractors will be identified;

2. the specific matters to be covered by such authority and responsibility will be itemized; and

3. the extent of such authority and responsibilities will be provided.

B. Unless otherwise provided in the Supplementary Conditions, Owner shall have sole authority and responsibility for such coordination.

7.03 *Legal Relationships*

A. Paragraphs 7.01.A and 7.02 are not applicable for utilities not under the control of Owner.

B. Each other direct contract of Owner under Paragraph 7.01.A shall provide that the other contractor is liable to Owner and Contractor for the reasonable direct delay and disruption costs incurred by Contractor as a result of the other contractor's wrongful actions or inactions.

C. Contractor shall be liable to Owner and any other contractor under direct contract to Owner for the reasonable direct delay and disruption costs incurred by such other contractor as a result of Contractor's wrongful action or inactions.


**Copyright © 2007 National Society of Professional Engineers for EJCDC. All rights reserved.**

## ARTICLE 8 – OWNER'S RESPONSIBILITIES

8.01 *Communications to Contractor*

A. Except as otherwise provided in these General Conditions, Owner shall issue all communications to Contractor through Engineer.

8.02 *Replacement of Engineer*

A. In case of termination of the employment of Engineer, Owner shall appoint an engineer to whom Contractor makes no reasonable objection, whose status under the Contract Documents shall be that of the former Engineer.

8.03 *Furnish Data*

A. Owner shall promptly furnish the data required of Owner under the Contract Documents.

8.04 *Pay When Due*

A. Owner shall make payments to Contractor when they are due as provided in Paragraphs 14.02.C and 14.07.C.

8.05 *Lands and Easements; Reports and Tests*

A. Owner's duties with respect to providing lands and easements and providing engineering surveys to establish reference points are set forth in Paragraphs 4.01 and 4.05. Paragraph 4.02 refers to Owner's identifying and making available to Contractor copies of reports of explorations and tests of subsurface conditions and drawings of physical conditions relating to existing surface or subsurface structures at the Site.

8.06 *Insurance*

A. Owner's responsibilities, if any, with respect to purchasing and maintaining liability and property insurance are set forth in Article 5.

8.07 *Change Orders*

A. Owner is obligated to execute Change Orders as indicated in Paragraph 10.03.

8.08 *Inspections, Tests, and Approvals*

A. Owner's responsibility with respect to certain inspections, tests, and approvals is set forth in Paragraph 13.03.B.

8.09 *Limitations on Owner's Responsibilities*

A. The Owner shall not supervise, direct, or have control or authority over, nor be responsible for, Contractor's means, methods, techniques, sequences, or procedures of construction, or the safety precautions and programs incident thereto, or for any failure of Contractor to comply with Laws


**Copyright © 2007 National Society of Professional Engineers for EJCDC. All rights reserved.**

and Regulations applicable to the performance of the Work. Owner will not be responsible for Contractor's failure to perform the Work in accordance with the Contract Documents.

8.10 *Undisclosed Hazardous Environmental Condition*

A. Owner's responsibility in respect to an undisclosed Hazardous Environmental Condition is set forth in Paragraph 4.06.

8.11 *Evidence of Financial Arrangements*

A. Upon request of Contractor, Owner shall furnish Contractor reasonable evidence that financial arrangements have been made to satisfy Owner's obligations under the Contract Documents.

8.12 *Compliance with Safety Program*

A. While at the Site, Owner's employees and representatives shall comply with the specific applicable requirements of Contractor's safety programs of which Owner has been informed pursuant to Paragraph 6.13.D.

## ARTICLE 9 – ENGINEER'S STATUS DURING CONSTRUCTION

9.01 *Owner's Representative*

A. Engineer will be Owner's representative during the construction period. The duties and responsibilities and the limitations of authority of Engineer as Owner's representative during construction are set forth in the Contract Documents.

9.02 *Visits to Site*

A. Engineer will make visits to the Site at intervals appropriate to the various stages of construction as Engineer deems necessary in order to observe as an experienced and qualified design professional the progress that has been made and the quality of the various aspects of Contractor's executed Work. Based on information obtained during such visits and observations, Engineer, for the benefit of Owner, will determine, in general, if the Work is proceeding in accordance with the Contract Documents. Engineer will not be required to make exhaustive or continuous inspections on the Site to check the quality or quantity of the Work. Engineer's efforts will be directed toward providing for Owner a greater degree of confidence that the completed Work will conform generally to the Contract Documents. On the basis of such visits and observations, Engineer will keep Owner informed of the progress of the Work and will endeavor to guard Owner against defective Work.

B. Engineer's visits and observations are subject to all the limitations on Engineer's authority and responsibility set forth in Paragraph 9.09. Particularly, but without limitation, during or as a result of Engineer's visits or observations of Contractor's Work, Engineer will not supervise, direct, control, or have authority over or be responsible for Contractor's means, methods, techniques, sequences, or procedures of construction, or the safety precautions and programs incident thereto, or for any failure of Contractor to comply with Laws and Regulations applicable to the performance of the Work.


**Copyright © 2007 National Society of Professional Engineers for EJCDC. All rights reserved.**

9.03 *Project Representative*

A. If Owner and Engineer agree, Engineer will furnish a Resident Project Representative to assist Engineer in providing more extensive observation of the Work. The authority and responsibilities of any such Resident Project Representative and assistants will be as provided in the Supplementary Conditions, and limitations on the responsibilities thereof will be as provided in Paragraph 9.09. If Owner designates another representative or agent to represent Owner at the Site who is not Engineer's consultant, agent or employee, the responsibilities and authority and limitations thereon of such other individual or entity will be as provided in the Supplementary Conditions.

9.04 *Authorized Variations in Work*

A. Engineer may authorize minor variations in the Work from the requirements of the Contract Documents which do not involve an adjustment in the Contract Price or the Contract Times and are compatible with the design concept of the completed Project as a functioning whole as indicated by the Contract Documents. These may be accomplished by a Field Order and will be binding on Owner and also on Contractor, who shall perform the Work involved promptly. If Owner or Contractor believes that a Field Order justifies an adjustment in the Contract Price or Contract Times, or both, and the parties are unable to agree on entitlement to or on the amount or extent, if any, of any such adjustment, a Claim may be made therefor as provided in Paragraph 10.05.

9.05 *Rejecting Defective Work*

A. Engineer will have authority to reject Work which Engineer believes to be defective, or that Engineer believes will not produce a completed Project that conforms to the Contract Documents or that will prejudice the integrity of the design concept of the completed Project as a functioning whole as indicated by the Contract Documents. Engineer will also have authority to require special inspection or testing of the Work as provided in Paragraph 13.04, whether or not the Work is fabricated, installed, or completed.

9.06 *Shop Drawings, Change Orders and Payments*

A. In connection with Engineer's authority, and limitations thereof, as to Shop Drawings and Samples, see Paragraph 6.17.

B. In connection with Engineer's authority, and limitations thereof, as to design calculations and design drawings submitted in response to a delegation of professional design services, if any, see Paragraph 6.21.

C. In connection with Engineer's authority as to Change Orders, see Articles 10, 11, and 12.

D. In connection with Engineer's authority as to Applications for Payment, see Article 14.

9.07 *Determinations for Unit Price Work*

A. Engineer will determine the actual quantities and classifications of Unit Price Work performed by Contractor. Engineer will review with Contractor the Engineer's preliminary determinations


**Copyright © 2007 National Society of Professional Engineers for EJCDC. All rights reserved.**

on such matters before rendering a written decision thereon (by recommendation of an Application for Payment or otherwise). Engineer's written decision thereon will be final and binding (except as modified by Engineer to reflect changed factual conditions or more accurate data) upon Owner and Contractor, subject to the provisions of Paragraph 10.05.

9.08 *Decisions on Requirements of Contract Documents and Acceptability of Work*

A. Engineer will be the initial interpreter of the requirements of the Contract Documents and judge of the acceptability of the Work thereunder. All matters in question and other matters between Owner and Contractor arising prior to the date final payment is due relating to the acceptability of the Work, and the interpretation of the requirements of the Contract Documents pertaining to the performance of the Work, will be referred initially to Engineer in writing within 30 days of the event giving rise to the question.

B. Engineer will, with reasonable promptness, render a written decision on the issue referred. If Owner or Contractor believes that any such decision entitles them to an adjustment in the Contract Price or Contract Times or both, a Claim may be made under Paragraph 10.05. The date of Engineer's decision shall be the date of the event giving rise to the issues referenced for the purposes of Paragraph 10.05.B.

C. Engineer's written decision on the issue referred will be final and binding on Owner and Contractor, subject to the provisions of Paragraph 10.05.

D. When functioning as interpreter and judge under this Paragraph 9.08, Engineer will not show partiality to Owner or Contractor and will not be liable in connection with any interpretation or decision rendered in good faith in such capacity.

9.09 *Limitations on Engineer's Authority and Responsibilities*

A. Neither Engineer's authority or responsibility under this Article 9 or under any other provision of the Contract Documents nor any decision made by Engineer in good faith either to exercise or not exercise such authority or responsibility or the undertaking, exercise, or performance of any authority or responsibility by Engineer shall create, impose, or give rise to any duty in contract, tort, or otherwise owed by Engineer to Contractor, any Subcontractor, any Supplier, any other individual or entity, or to any surety for or employee or agent of any of them.

B. Engineer will not supervise, direct, control, or have authority over or be responsible for Contractor's means, methods, techniques, sequences, or procedures of construction, or the safety precautions and programs incident thereto, or for any failure of Contractor to comply with Laws and Regulations applicable to the performance of the Work. Engineer will not be responsible for Contractor's failure to perform the Work in accordance with the Contract Documents.

C. Engineer will not be responsible for the acts or omissions of Contractor or of any Subcontractor, any Supplier, or of any other individual or entity performing any of the Work.

D. Engineer's review of the final Application for Payment and accompanying documentation and all maintenance and operating instructions, schedules, guarantees, bonds, certificates of inspection, tests and approvals, and other documentation required to be delivered by Paragraph 14.07.A will only be to determine generally that their content complies with the requirements of,


**Copyright © 2007 National Society of Professional Engineers for EJCDC. All rights reserved.**

and in the case of certificates of inspections, tests, and approvals that the results certified indicate compliance with, the Contract Documents.

E. The limitations upon authority and responsibility set forth in this Paragraph 9.09 shall also apply to the Resident Project Representative, if any, and assistants, if any.

9.10 *Compliance with Safety Program*

A. While at the Site, Engineer's employees and representatives shall comply with the specific applicable requirements of Contractor's safety programs of which Engineer has been informed pursuant to Paragraph 6.13.D.

## ARTICLE 10 – CHANGES IN THE WORK; CLAIMS

10.01 *Authorized Changes in the Work*

A. Without invalidating the Contract and without notice to any surety, Owner may, at any time or from time to time, order additions, deletions, or revisions in the Work by a Change Order, or a Work Change Directive. Upon receipt of any such document, Contractor shall promptly proceed with the Work involved which will be performed under the applicable conditions of the Contract Documents (except as otherwise specifically provided).

B. If Owner and Contractor are unable to agree on entitlement to, or on the amount or extent, if any, of an adjustment in the Contract Price or Contract Times, or both, that should be allowed as a result of a Work Change Directive, a Claim may be made therefor as provided in Paragraph 10.05.

10.02 *Unauthorized Changes in the Work*

A. Contractor shall not be entitled to an increase in the Contract Price or an extension of the Contract Times with respect to any work performed that is not required by the Contract Documents as amended, modified, or supplemented as provided in Paragraph 3.04, except in the case of an emergency as provided in Paragraph 6.16 or in the case of uncovering Work as provided in Paragraph 13.04.D.

10.03 *Execution of Change Orders*

A. Owner and Contractor shall execute appropriate Change Orders recommended by Engineer covering:

1. changes in the Work which are: (i) ordered by Owner pursuant to Paragraph 10.01.A, (ii) required because of acceptance of defective Work under Paragraph 13.08.A or Owner's correction of defective Work under Paragraph 13.09, or (iii) agreed to by the parties;

2. changes in the Contract Price or Contract Times which are agreed to by the parties, including any undisputed sum or amount of time for Work actually performed in accordance with a Work Change Directive; and

3. changes in the Contract Price or Contract Times which embody the substance of any written decision rendered by Engineer pursuant to Paragraph 10.05; provided that, in lieu of


**Copyright © 2007 National Society of Professional Engineers for EJCDC. All rights reserved.**

executing any such Change Order, an appeal may be taken from any such decision in accordance with the provisions of the Contract Documents and applicable Laws and Regulations, but during any such appeal, Contractor shall carry on the Work and adhere to the Progress Schedule as provided in Paragraph 6.18.A.

10.04 *Notification to Surety*

A. If the provisions of any bond require notice to be given to a surety of any change affecting the general scope of the Work or the provisions of the Contract Documents (including, but not limited to, Contract Price or Contract Times), the giving of any such notice will be Contractor's responsibility. The amount of each applicable bond will be adjusted to reflect the effect of any such change.

10.05 *Claims*

A. *Engineer's Decision Required*: All Claims, except those waived pursuant to Paragraph 14.09, shall be referred to the Engineer for decision. A decision by Engineer shall be required as a condition precedent to any exercise by Owner or Contractor of any rights or remedies either may otherwise have under the Contract Documents or by Laws and Regulations in respect of such Claims.

B. *Notice:* Written notice stating the general nature of each Claim shall be delivered by the claimant to Engineer and the other party to the Contract promptly (but in no event later than 30 days) after the start of the event giving rise thereto. The responsibility to substantiate a Claim shall rest with the party making the Claim. Notice of the amount or extent of the Claim, with supporting data shall be delivered to the Engineer and the other party to the Contract within 60 days after the start of such event (unless Engineer allows additional time for claimant to submit additional or more accurate data in support of such Claim). A Claim for an adjustment in Contract Price shall be prepared in accordance with the provisions of Paragraph 12.01.B. A Claim for an adjustment in Contract Times shall be prepared in accordance with the provisions of Paragraph 12.02.B. Each Claim shall be accompanied by claimant's written statement that the adjustment claimed is the entire adjustment to which the claimant believes it is entitled as a result of said event. The opposing party shall submit any response to Engineer and the claimant within 30 days after receipt of the claimant's last submittal (unless Engineer allows additional time).

C. *Engineer's Action*: Engineer will review each Claim and, within 30 days after receipt of the last submittal of the claimant or the last submittal of the opposing party, if any, take one of the following actions in writing:

1. deny the Claim in whole or in part;

2. approve the Claim; or

3. notify the parties that the Engineer is unable to resolve the Claim if, in the Engineer's sole discretion, it would be inappropriate for the Engineer to do so. For purposes of further resolution of the Claim, such notice shall be deemed a denial.

D. In the event that Engineer does not take action on a Claim within said 30 days, the Claim shall be deemed denied.


**Copyright © 2007 National Society of Professional Engineers for EJCDC. All rights reserved.**

E. Engineer's written action under Paragraph 10.05.C or denial pursuant to Paragraphs 10.05.C.3 or 10.05.D will be final and binding upon Owner and Contractor, unless Owner or Contractor invoke the dispute resolution procedure set forth in Article 16 within 30 days of such action or denial.

F. No Claim for an adjustment in Contract Price or Contract Times will be valid if not submitted in accordance with this Paragraph 10.05.

## ARTICLE 11 – COST OF THE WORK; ALLOWANCES; UNIT PRICE WORK

11.01 *Cost of the Work*

A. *Costs Included:* The term Cost of the Work means the sum of all costs, except those excluded in Paragraph 11.01.B, necessarily incurred and paid by Contractor in the proper performance of the Work. When the value of any Work covered by a Change Order or when a Claim for an adjustment in Contract Price is determined on the basis of Cost of the Work, the costs to be reimbursed to Contractor will be only those additional or incremental costs required because of the change in the Work or because of the event giving rise to the Claim. Except as otherwise may be agreed to in writing by Owner, such costs shall be in amounts no higher than those prevailing in the locality of the Project, shall not include any of the costs itemized in Paragraph 11.01.B, and shall include only the following items:

1. Payroll costs for employees in the direct employ of Contractor in the performance of the Work under schedules of job classifications agreed upon by Owner and Contractor. Such employees shall include, without limitation, superintendents, foremen, and other personnel employed full time on the Work. Payroll costs for employees not employed full time on the Work shall be apportioned on the basis of their time spent on the Work. Payroll costs shall include, but not be limited to, salaries and wages plus the cost of fringe benefits, which shall include social security contributions, unemployment, excise, and payroll taxes, workers' compensation, health and retirement benefits, bonuses, sick leave, vacation and holiday pay applicable thereto. The expenses of performing Work outside of regular working hours, on Saturday, Sunday, or legal holidays, shall be included in the above to the extent authorized by Owner.

2. Cost of all materials and equipment furnished and incorporated in the Work, including costs of transportation and storage thereof, and Suppliers' field services required in connection therewith. All cash discounts shall accrue to Contractor unless Owner deposits funds with Contractor with which to make payments, in which case the cash discounts shall accrue to Owner. All trade discounts, rebates and refunds and returns from sale of surplus materials and equipment shall accrue to Owner, and Contractor shall make provisions so that they may be obtained.

3. Payments made by Contractor to Subcontractors for Work performed by Subcontractors. If required by Owner, Contractor shall obtain competitive bids from subcontractors acceptable to Owner and Contractor and shall deliver such bids to Owner, who will then determine, with the advice of Engineer, which bids, if any, will be acceptable. If any subcontract provides that the Subcontractor is to be paid on the basis of Cost of the Work plus a fee, the Subcontractor's Cost of the Work and fee shall be determined in the same manner as Contractor's Cost of the Work and fee as provided in this Paragraph 11.01.


**Copyright © 2007 National Society of Professional Engineers for EJCDC. All rights reserved.**

4. Costs of special consultants (including but not limited to engineers, architects, testing laboratories, surveyors, attorneys, and accountants) employed for services specifically related to the Work.

5. Supplemental costs including the following:

    a. The proportion of necessary transportation, travel, and subsistence expenses of Contractor's employees incurred in discharge of duties connected with the Work.

    b. Cost, including transportation and maintenance, of all materials, supplies, equipment, machinery, appliances, office, and temporary facilities at the Site, and hand tools not owned by the workers, which are consumed in the performance of the Work, and cost, less market value, of such items used but not consumed which remain the property of Contractor.

    c. Rentals of all construction equipment and machinery, and the parts thereof whether rented from Contractor or others in accordance with rental agreements approved by Owner with the advice of Engineer, and the costs of transportation, loading, unloading, assembly, dismantling, and removal thereof. All such costs shall be in accordance with the terms of said rental agreements. The rental of any such equipment, machinery, or parts shall cease when the use thereof is no longer necessary for the Work.

    d. Sales, consumer, use, and other similar taxes related to the Work, and for which Contractor is liable, as imposed by Laws and Regulations.

    e. Deposits lost for causes other than negligence of Contractor, any Subcontractor, or anyone directly or indirectly employed by any of them or for whose acts any of them may be liable, and royalty payments and fees for permits and licenses.

    f. Losses and damages (and related expenses) caused by damage to the Work, not compensated by insurance or otherwise, sustained by Contractor in connection with the performance of the Work (except losses and damages within the deductible amounts of property insurance established in accordance with Paragraph 5.06.D), provided such losses and damages have resulted from causes other than the negligence of Contractor, any Subcontractor, or anyone directly or indirectly employed by any of them or for whose acts any of them may be liable. Such losses shall include settlements made with the written consent and approval of Owner. No such losses, damages, and expenses shall be included in the Cost of the Work for the purpose of determining Contractor's fee.

    g. The cost of utilities, fuel, and sanitary facilities at the Site.

    h. Minor expenses such as telegrams, long distance telephone calls, telephone service at the Site, express and courier services, and similar petty cash items in connection with the Work.

    i. The costs of premiums for all bonds and insurance Contractor is required by the Contract Documents to purchase and maintain.

B. *Costs Excluded:* The term Cost of the Work shall not include any of the following items:


**Copyright © 2007 National Society of Professional Engineers for EJCDC. All rights reserved.**

1. Payroll costs and other compensation of Contractor's officers, executives, principals (of partnerships and sole proprietorships), general managers, safety managers, engineers, architects, estimators, attorneys, auditors, accountants, purchasing and contracting agents, expediters, timekeepers, clerks, and other personnel employed by Contractor, whether at the Site or in Contractor's principal or branch office for general administration of the Work and not specifically included in the agreed upon schedule of job classifications referred to in Paragraph 11.01.A.1 or specifically covered by Paragraph 11.01.A.4, all of which are to be considered administrative costs covered by the Contractor's fee.

2. Expenses of Contractor's principal and branch offices other than Contractor's office at the Site.

3. Any part of Contractor's capital expenses, including interest on Contractor's capital employed for the Work and charges against Contractor for delinquent payments.

4. Costs due to the negligence of Contractor, any Subcontractor, or anyone directly or indirectly employed by any of them or for whose acts any of them may be liable, including but not limited to, the correction of defective Work, disposal of materials or equipment wrongly supplied, and making good any damage to property.

5. Other overhead or general expense costs of any kind and the costs of any item not specifically and expressly included in Paragraphs 11.01.A.

C. *Contractor's Fee:* When all the Work is performed on the basis of cost-plus, Contractor's fee shall be determined as set forth in the Agreement. When the value of any Work covered by a Change Order or when a Claim for an adjustment in Contract Price is determined on the basis of Cost of the Work, Contractor's fee shall be determined as set forth in Paragraph 12.01.C.

D. *Documentation:* Whenever the Cost of the Work for any purpose is to be determined pursuant to Paragraphs 11.01.A and 11.01.B, Contractor will establish and maintain records thereof in accordance with generally accepted accounting practices and submit in a form acceptable to Engineer an itemized cost breakdown together with supporting data.

11.02 *Allowances*

A. It is understood that Contractor has included in the Contract Price all allowances so named in the Contract Documents and shall cause the Work so covered to be performed for such sums and by such persons or entities as may be acceptable to Owner and Engineer.

B. *Cash Allowances:*

1. Contractor agrees that:

a. the cash allowances include the cost to Contractor (less any applicable trade discounts) of materials and equipment required by the allowances to be delivered at the Site, and all applicable taxes; and

b. Contractor's costs for unloading and handling on the Site, labor, installation, overhead, profit, and other expenses contemplated for the cash allowances have been included in


**Copyright © 2007 National Society of Professional Engineers for EJCDC. All rights reserved.**

the Contract Price and not in the allowances, and no demand for additional payment on account of any of the foregoing will be valid.

C. *Contingency Allowance:*

1. Contractor agrees that a contingency allowance, if any, is for the sole use of Owner to cover unanticipated costs.

D. Prior to final payment, an appropriate Change Order will be issued as recommended by Engineer to reflect actual amounts due Contractor on account of Work covered by allowances, and the Contract Price shall be correspondingly adjusted.

11.03 *Unit Price Work*

A. Where the Contract Documents provide that all or part of the Work is to be Unit Price Work, initially the Contract Price will be deemed to include for all Unit Price Work an amount equal to the sum of the unit price for each separately identified item of Unit Price Work times the estimated quantity of each item as indicated in the Agreement.

B. The estimated quantities of items of Unit Price Work are not guaranteed and are solely for the purpose of comparison of Bids and determining an initial Contract Price. Determinations of the actual quantities and classifications of Unit Price Work performed by Contractor will be made by Engineer subject to the provisions of Paragraph 9.07.

C. Each unit price will be deemed to include an amount considered by Contractor to be adequate to cover Contractor's overhead and profit for each separately identified item.

D. Owner or Contractor may make a Claim for an adjustment in the Contract Price in accordance with Paragraph 10.05 if:

1. the quantity of any item of Unit Price Work performed by Contractor differs materially and significantly from the estimated quantity of such item indicated in the Agreement; and

2. there is no corresponding adjustment with respect to any other item of Work; and

3. Contractor believes that Contractor is entitled to an increase in Contract Price as a result of having incurred additional expense or Owner believes that Owner is entitled to a decrease in Contract Price and the parties are unable to agree as to the amount of any such increase or decrease.

## ARTICLE 12 – CHANGE OF CONTRACT PRICE; CHANGE OF CONTRACT TIMES

12.01 *Change of Contract Price*

A. The Contract Price may only be changed by a Change Order. Any Claim for an adjustment in the Contract Price shall be based on written notice submitted by the party making the Claim to the Engineer and the other party to the Contract in accordance with the provisions of Paragraph 10.05.


**Copyright © 2007 National Society of Professional Engineers for EJCDC. All rights reserved.**

B. The value of any Work covered by a Change Order or of any Claim for an adjustment in the Contract Price will be determined as follows:

1. where the Work involved is covered by unit prices contained in the Contract Documents, by application of such unit prices to the quantities of the items involved (subject to the provisions of Paragraph 11.03); or

2. where the Work involved is not covered by unit prices contained in the Contract Documents, by a mutually agreed lump sum (which may include an allowance for overhead and profit not necessarily in accordance with Paragraph 12.01.C.2); or

3. where the Work involved is not covered by unit prices contained in the Contract Documents and agreement to a lump sum is not reached under Paragraph 12.01.B.2, on the basis of the Cost of the Work (determined as provided in Paragraph 11.01) plus a Contractor's fee for overhead and profit (determined as provided in Paragraph 12.01.C).

C. *Contractor's Fee:* The Contractor's fee for overhead and profit shall be determined as follows:

1. a mutually acceptable fixed fee; or

2. if a fixed fee is not agreed upon, then a fee based on the following percentages of the various portions of the Cost of the Work:

   a. for costs incurred under Paragraphs 11.01.A.1 and 11.01.A.2, the Contractor's fee shall be 15 percent;

   b. for costs incurred under Paragraph 11.01.A.3, the Contractor's fee shall be five percent;

   c. where one or more tiers of subcontracts are on the basis of Cost of the Work plus a fee and no fixed fee is agreed upon, the intent of Paragraphs 12.01.C.2.a and 12.01.C.2.b is that the Subcontractor who actually performs the Work, at whatever tier, will be paid a fee of 15 percent of the costs incurred by such Subcontractor under Paragraphs 11.01.A.1 and 11.01.A.2 and that any higher tier Subcontractor and Contractor will each be paid a fee of five percent of the amount paid to the next lower tier Subcontractor;

   d. no fee shall be payable on the basis of costs itemized under Paragraphs 11.01.A.4, 11.01.A.5, and 11.01.B;

   e. the amount of credit to be allowed by Contractor to Owner for any change which results in a net decrease in cost will be the amount of the actual net decrease in cost plus a deduction in Contractor's fee by an amount equal to five percent of such net decrease; and

   f. when both additions and credits are involved in any one change, the adjustment in Contractor's fee shall be computed on the basis of the net change in accordance with Paragraphs 12.01.C.2.a through 12.01.C.2.e, inclusive.


**Copyright © 2007 National Society of Professional Engineers for EJCDC. All rights reserved.**

12.02 *Change of Contract Times*

A. The Contract Times may only be changed by a Change Order. Any Claim for an adjustment in the Contract Times shall be based on written notice submitted by the party making the Claim to the Engineer and the other party to the Contract in accordance with the provisions of Paragraph 10.05.

B. Any adjustment of the Contract Times covered by a Change Order or any Claim for an adjustment in the Contract Times will be determined in accordance with the provisions of this Article 12.

12.03 *Delays*

A. Where Contractor is prevented from completing any part of the Work within the Contract Times due to delay beyond the control of Contractor, the Contract Times will be extended in an amount equal to the time lost due to such delay if a Claim is made therefor as provided in Paragraph 12.02.A. Delays beyond the control of Contractor shall include, but not be limited to, acts or neglect by Owner, acts or neglect of utility owners or other contractors performing other work as contemplated by Article 7, fires, floods, epidemics, abnormal weather conditions, or acts of God.

B. If Owner, Engineer, or other contractors or utility owners performing other work for Owner as contemplated by Article 7, or anyone for whom Owner is responsible, delays, disrupts, or interferes with the performance or progress of the Work, then Contractor shall be entitled to an equitable adjustment in the Contract Price or the Contract Times, or both. Contractor's entitlement to an adjustment of the Contract Times is conditioned on such adjustment being essential to Contractor's ability to complete the Work within the Contract Times.

C. If Contractor is delayed in the performance or progress of the Work by fire, flood, epidemic, abnormal weather conditions, acts of God, acts or failures to act of utility owners not under the control of Owner, or other causes not the fault of and beyond control of Owner and Contractor, then Contractor shall be entitled to an equitable adjustment in Contract Times, if such adjustment is essential to Contractor's ability to complete the Work within the Contract Times. Such an adjustment shall be Contractor's sole and exclusive remedy for the delays described in this Paragraph 12.03.C.

D. Owner, Engineer, and their officers, directors, members, partners, employees, agents, consultants, or subcontractors shall not be liable to Contractor for any claims, costs, losses, or damages (including but not limited to all fees and charges of engineers, architects, attorneys, and other professionals and all court or arbitration or other dispute resolution costs) sustained by Contractor on or in connection with any other project or anticipated project.

E. Contractor shall not be entitled to an adjustment in Contract Price or Contract Times for delays within the control of Contractor. Delays attributable to and within the control of a Subcontractor or Supplier shall be deemed to be delays within the control of Contractor.


**Copyright © 2007 National Society of Professional Engineers for EJCDC. All rights reserved.**

## ARTICLE 13 – TESTS AND INSPECTIONS; CORRECTION, REMOVAL OR ACCEPTANCE OF DEFECTIVE WORK

13.01 *Notice of Defects*

A. Prompt notice of all defective Work of which Owner or Engineer has actual knowledge will be given to Contractor. Defective Work may be rejected, corrected, or accepted as provided in this Article 13.

13.02 *Access to Work*

A. Owner, Engineer, their consultants and other representatives and personnel of Owner, independent testing laboratories, and governmental agencies with jurisdictional interests will have access to the Site and the Work at reasonable times for their observation, inspection, and testing. Contractor shall provide them proper and safe conditions for such access and advise them of Contractor's safety procedures and programs so that they may comply therewith as applicable.

13.03 *Tests and Inspections*

A. Contractor shall give Engineer timely notice of readiness of the Work for all required inspections, tests, or approvals and shall cooperate with inspection and testing personnel to facilitate required inspections or tests.

B. Owner shall employ and pay for the services of an independent testing laboratory to perform all inspections, tests, or approvals required by the Contract Documents except:

1. for inspections, tests, or approvals covered by Paragraphs 13.03.C and 13.03.D below;

2. that costs incurred in connection with tests or inspections conducted pursuant to Paragraph 13.04.B shall be paid as provided in Paragraph 13.04.C; and

3. as otherwise specifically provided in the Contract Documents.

C. If Laws or Regulations of any public body having jurisdiction require any Work (or part thereof) specifically to be inspected, tested, or approved by an employee or other representative of such public body, Contractor shall assume full responsibility for arranging and obtaining such inspections, tests, or approvals, pay all costs in connection therewith, and furnish Engineer the required certificates of inspection or approval.

D. Contractor shall be responsible for arranging and obtaining and shall pay all costs in connection with any inspections, tests, or approvals required for Owner's and Engineer's acceptance of materials or equipment to be incorporated in the Work; or acceptance of materials, mix designs, or equipment submitted for approval prior to Contractor's purchase thereof for incorporation in the Work. Such inspections, tests, or approvals shall be performed by organizations acceptable to Owner and Engineer.


**Copyright © 2007 National Society of Professional Engineers for EJCDC. All rights reserved.**

E. If any Work (or the work of others) that is to be inspected, tested, or approved is covered by Contractor without written concurrence of Engineer, Contractor shall, if requested by Engineer, uncover such Work for observation.

F. Uncovering Work as provided in Paragraph 13.03.E shall be at Contractor's expense unless Contractor has given Engineer timely notice of Contractor's intention to cover the same and Engineer has not acted with reasonable promptness in response to such notice.

13.04 *Uncovering Work*

A. If any Work is covered contrary to the written request of Engineer, it must, if requested by Engineer, be uncovered for Engineer's observation and replaced at Contractor's expense.

B. If Engineer considers it necessary or advisable that covered Work be observed by Engineer or inspected or tested by others, Contractor, at Engineer's request, shall uncover, expose, or otherwise make available for observation, inspection, or testing as Engineer may require, that portion of the Work in question, furnishing all necessary labor, material, and equipment.

C. If it is found that the uncovered Work is defective, Contractor shall pay all claims, costs, losses, and damages (including but not limited to all fees and charges of engineers, architects, attorneys, and other professionals and all court or arbitration or other dispute resolution costs) arising out of or relating to such uncovering, exposure, observation, inspection, and testing, and of satisfactory replacement or reconstruction (including but not limited to all costs of repair or replacement of work of others); and Owner shall be entitled to an appropriate decrease in the Contract Price. If the parties are unable to agree as to the amount thereof, Owner may make a Claim therefor as provided in Paragraph 10.05.

D. If the uncovered Work is not found to be defective, Contractor shall be allowed an increase in the Contract Price or an extension of the Contract Times, or both, directly attributable to such uncovering, exposure, observation, inspection, testing, replacement, and reconstruction. If the parties are unable to agree as to the amount or extent thereof, Contractor may make a Claim therefor as provided in Paragraph 10.05.

13.05 *Owner May Stop the Work*

A. If the Work is defective, or Contractor fails to supply sufficient skilled workers or suitable materials or equipment, or fails to perform the Work in such a way that the completed Work will conform to the Contract Documents, Owner may order Contractor to stop the Work, or any portion thereof, until the cause for such order has been eliminated; however, this right of Owner to stop the Work shall not give rise to any duty on the part of Owner to exercise this right for the benefit of Contractor, any Subcontractor, any Supplier, any other individual or entity, or any surety for, or employee or agent of any of them.

13.06 *Correction or Removal of Defective Work*

A. Promptly after receipt of written notice, Contractor shall correct all defective Work, whether or not fabricated, installed, or completed, or, if the Work has been rejected by Engineer, remove it from the Project and replace it with Work that is not defective. Contractor shall pay all claims, costs, losses, and damages (including but not limited to all fees and charges of engineers,


**Copyright © 2007 National Society of Professional Engineers for EJCDC. All rights reserved.**

architects, attorneys, and other professionals and all court or arbitration or other dispute resolution costs) arising out of or relating to such correction or removal (including but not limited to all costs of repair or replacement of work of others).

B. When correcting defective Work under the terms of this Paragraph 13.06 or Paragraph 13.07, Contractor shall take no action that would void or otherwise impair Owner's special warranty and guarantee, if any, on said Work.

13.07 *Correction Period*

A. If within one year after the date of Substantial Completion (or such longer period of time as may be prescribed by the terms of any applicable special guarantee required by the Contract Documents) or by any specific provision of the Contract Documents, any Work is found to be defective, or if the repair of any damages to the land or areas made available for Contractor's use by Owner or permitted by Laws and Regulations as contemplated in Paragraph 6.11.A is found to be defective, Contractor shall promptly, without cost to Owner and in accordance with Owner's written instructions:

1. repair such defective land or areas; or

2. correct such defective Work; or

3. if the defective Work has been rejected by Owner, remove it from the Project and replace it with Work that is not defective, and

4. satisfactorily correct or repair or remove and replace any damage to other Work, to the work of others or other land or areas resulting therefrom.

B. If Contractor does not promptly comply with the terms of Owner's written instructions, or in an emergency where delay would cause serious risk of loss or damage, Owner may have the defective Work corrected or repaired or may have the rejected Work removed and replaced. All claims, costs, losses, and damages (including but not limited to all fees and charges of engineers, architects, attorneys, and other professionals and all court or arbitration or other dispute resolution costs) arising out of or relating to such correction or repair or such removal and replacement (including but not limited to all costs of repair or replacement of work of others) will be paid by Contractor.

C. In special circumstances where a particular item of equipment is placed in continuous service before Substantial Completion of all the Work, the correction period for that item may start to run from an earlier date if so provided in the Specifications.

D. Where defective Work (and damage to other Work resulting therefrom) has been corrected or removed and replaced under this Paragraph 13.07, the correction period hereunder with respect to such Work will be extended for an additional period of one year after such correction or removal and replacement has been satisfactorily completed.

E. Contractor's obligations under this Paragraph 13.07 are in addition to any other obligation or warranty. The provisions of this Paragraph 13.07 shall not be construed as a substitute for, or a waiver of, the provisions of any applicable statute of limitation or repose.


**Copyright © 2007 National Society of Professional Engineers for EJCDC. All rights reserved.**

13.08 *Acceptance of Defective Work*

A. If, instead of requiring correction or removal and replacement of defective Work, Owner (and, prior to Engineer's recommendation of final payment, Engineer) prefers to accept it, Owner may do so. Contractor shall pay all claims, costs, losses, and damages (including but not limited to all fees and charges of engineers, architects, attorneys, and other professionals and all court or arbitration or other dispute resolution costs) attributable to Owner's evaluation of and determination to accept such defective Work (such costs to be approved by Engineer as to reasonableness) and for the diminished value of the Work to the extent not otherwise paid by Contractor pursuant to this sentence. If any such acceptance occurs prior to Engineer's recommendation of final payment, a Change Order will be issued incorporating the necessary revisions in the Contract Documents with respect to the Work, and Owner shall be entitled to an appropriate decrease in the Contract Price, reflecting the diminished value of Work so accepted. If the parties are unable to agree as to the amount thereof, Owner may make a Claim therefor as provided in Paragraph 10.05. If the acceptance occurs after such recommendation, an appropriate amount will be paid by Contractor to Owner.

13.09 *Owner May Correct Defective Work*

A. If Contractor fails within a reasonable time after written notice from Engineer to correct defective Work, or to remove and replace rejected Work as required by Engineer in accordance with Paragraph 13.06.A, or if Contractor fails to perform the Work in accordance with the Contract Documents, or if Contractor fails to comply with any other provision of the Contract Documents, Owner may, after seven days written notice to Contractor, correct, or remedy any such deficiency.

B. In exercising the rights and remedies under this Paragraph 13.09, Owner shall proceed expeditiously. In connection with such corrective or remedial action, Owner may exclude Contractor from all or part of the Site, take possession of all or part of the Work and suspend Contractor's services related thereto, take possession of Contractor's tools, appliances, construction equipment and machinery at the Site, and incorporate in the Work all materials and equipment stored at the Site or for which Owner has paid Contractor but which are stored elsewhere. Contractor shall allow Owner, Owner's representatives, agents and employees, Owner's other contractors, and Engineer and Engineer's consultants access to the Site to enable Owner to exercise the rights and remedies under this Paragraph.

C. All claims, costs, losses, and damages (including but not limited to all fees and charges of engineers, architects, attorneys, and other professionals and all court or arbitration or other dispute resolution costs) incurred or sustained by Owner in exercising the rights and remedies under this Paragraph 13.09 will be charged against Contractor, and a Change Order will be issued incorporating the necessary revisions in the Contract Documents with respect to the Work; and Owner shall be entitled to an appropriate decrease in the Contract Price. If the parties are unable to agree as to the amount of the adjustment, Owner may make a Claim therefor as provided in Paragraph 10.05. Such claims, costs, losses and damages will include but not be limited to all costs of repair, or replacement of work of others destroyed or damaged by correction, removal, or replacement of Contractor's defective Work.


**Copyright © 2007 National Society of Professional Engineers for EJCDC. All rights reserved.**

D. Contractor shall not be allowed an extension of the Contract Times because of any delay in the performance of the Work attributable to the exercise by Owner of Owner's rights and remedies under this Paragraph 13.09.

## ARTICLE 14 – PAYMENTS TO CONTRACTOR AND COMPLETION

14.01 *Schedule of Values*

A. The Schedule of Values established as provided in Paragraph 2.07.A will serve as the basis for progress payments and will be incorporated into a form of Application for Payment acceptable to Engineer. Progress payments on account of Unit Price Work will be based on the number of units completed.

14.02 *Progress Payments*

A. *Applications for Payments:*

1. At least 20 days before the date established in the Agreement for each progress payment (but not more often than once a month), Contractor shall submit to Engineer for review an Application for Payment filled out and signed by Contractor covering the Work completed as of the date of the Application and accompanied by such supporting documentation as is required by the Contract Documents. If payment is requested on the basis of materials and equipment not incorporated in the Work but delivered and suitably stored at the Site or at another location agreed to in writing, the Application for Payment shall also be accompanied by a bill of sale, invoice, or other documentation warranting that Owner has received the materials and equipment free and clear of all Liens and evidence that the materials and equipment are covered by appropriate property insurance or other arrangements to protect Owner's interest therein, all of which must be satisfactory to Owner.

2. Beginning with the second Application for Payment, each Application shall include an affidavit of Contractor stating that all previous progress payments received on account of the Work have been applied on account to discharge Contractor's legitimate obligations associated with prior Applications for Payment.

3. The amount of retainage with respect to progress payments will be as stipulated in the Agreement.

B. *Review of Applications:*

1. Engineer will, within 10 days after receipt of each Application for Payment, either indicate in writing a recommendation of payment and present the Application to Owner or return the Application to Contractor indicating in writing Engineer's reasons for refusing to recommend payment. In the latter case, Contractor may make the necessary corrections and resubmit the Application.

2. Engineer's recommendation of any payment requested in an Application for Payment will constitute a representation by Engineer to Owner, based on Engineer's observations of the executed Work as an experienced and qualified design professional, and on Engineer's


**Copyright © 2007 National Society of Professional Engineers for EJCDC. All rights reserved.**

review of the Application for Payment and the accompanying data and schedules, that to the best of Engineer's knowledge, information and belief:

a. the Work has progressed to the point indicated;

b. the quality of the Work is generally in accordance with the Contract Documents (subject to an evaluation of the Work as a functioning whole prior to or upon Substantial Completion, the results of any subsequent tests called for in the Contract Documents, a final determination of quantities and classifications for Unit Price Work under Paragraph 9.07, and any other qualifications stated in the recommendation); and

c. the conditions precedent to Contractor's being entitled to such payment appear to have been fulfilled in so far as it is Engineer's responsibility to observe the Work.

3. By recommending any such payment Engineer will not thereby be deemed to have represented that:

a. inspections made to check the quality or the quantity of the Work as it has been performed have been exhaustive, extended to every aspect of the Work in progress, or involved detailed inspections of the Work beyond the responsibilities specifically assigned to Engineer in the Contract Documents; or

b. there may not be other matters or issues between the parties that might entitle Contractor to be paid additionally by Owner or entitle Owner to withhold payment to Contractor.

4. Neither Engineer's review of Contractor's Work for the purposes of recommending payments nor Engineer's recommendation of any payment, including final payment, will impose responsibility on Engineer:

a. to supervise, direct, or control the Work, or

b. for the means, methods, techniques, sequences, or procedures of construction, or the safety precautions and programs incident thereto, or

c. for Contractor's failure to comply with Laws and Regulations applicable to Contractor's performance of the Work, or

d. to make any examination to ascertain how or for what purposes Contractor has used the moneys paid on account of the Contract Price, or

e. to determine that title to any of the Work, materials, or equipment has passed to Owner free and clear of any Liens.

5. Engineer may refuse to recommend the whole or any part of any payment if, in Engineer's opinion, it would be incorrect to make the representations to Owner stated in Paragraph 14.02.B.2. Engineer may also refuse to recommend any such payment or, because of subsequently discovered evidence or the results of subsequent inspections or tests, revise or revoke any such payment recommendation previously made, to such extent as may be necessary in Engineer's opinion to protect Owner from loss because:


**Copyright © 2007 National Society of Professional Engineers for EJCDC. All rights reserved.**

a. the Work is defective, or completed Work has been damaged, requiring correction or replacement;

b. the Contract Price has been reduced by Change Orders;

c. Owner has been required to correct defective Work or complete Work in accordance with Paragraph 13.09; or

d. Engineer has actual knowledge of the occurrence of any of the events enumerated in Paragraph 15.02.A.

C. *Payment Becomes Due:*

1. Ten days after presentation of the Application for Payment to Owner with Engineer's recommendation, the amount recommended will (subject to the provisions of Paragraph 14.02.D) become due, and when due will be paid by Owner to Contractor.

D. *Reduction in Payment:*

1. Owner may refuse to make payment of the full amount recommended by Engineer because:

a. claims have been made against Owner on account of Contractor's performance or furnishing of the Work;

b. Liens have been filed in connection with the Work, except where Contractor has delivered a specific bond satisfactory to Owner to secure the satisfaction and discharge of such Liens;

c. there are other items entitling Owner to a set-off against the amount recommended; or

d. Owner has actual knowledge of the occurrence of any of the events enumerated in Paragraphs 14.02.B.5.a through 14.02.B.5.c or Paragraph 15.02.A.

2. If Owner refuses to make payment of the full amount recommended by Engineer, Owner will give Contractor immediate written notice (with a copy to Engineer) stating the reasons for such action and promptly pay Contractor any amount remaining after deduction of the amount so withheld. Owner shall promptly pay Contractor the amount so withheld, or any adjustment thereto agreed to by Owner and Contractor, when Contractor remedies the reasons for such action.

3. Upon a subsequent determination that Owner's refusal of payment was not justified, the amount wrongfully withheld shall be treated as an amount due as determined by Paragraph 14.02.C.1 and subject to interest as provided in the Agreement.

14.03 *Contractor's Warranty of Title*

A. Contractor warrants and guarantees that title to all Work, materials, and equipment covered by any Application for Payment, whether incorporated in the Project or not, will pass to Owner no later than the time of payment free and clear of all Liens.


**Copyright © 2007 National Society of Professional Engineers for EJCDC. All rights reserved.**

14.04 *Substantial Completion*

A. When Contractor considers the entire Work ready for its intended use Contractor shall notify Owner and Engineer in writing that the entire Work is substantially complete (except for items specifically listed by Contractor as incomplete) and request that Engineer issue a certificate of Substantial Completion.

B. Promptly after Contractor's notification, Owner, Contractor, and Engineer shall make an inspection of the Work to determine the status of completion. If Engineer does not consider the Work substantially complete, Engineer will notify Contractor in writing giving the reasons therefor.

C. If Engineer considers the Work substantially complete, Engineer will deliver to Owner a tentative certificate of Substantial Completion which shall fix the date of Substantial Completion. There shall be attached to the certificate a tentative list of items to be completed or corrected before final payment. Owner shall have seven days after receipt of the tentative certificate during which to make written objection to Engineer as to any provisions of the certificate or attached list. If, after considering such objections, Engineer concludes that the Work is not substantially complete, Engineer will, within 14 days after submission of the tentative certificate to Owner, notify Contractor in writing, stating the reasons therefor. If, after consideration of Owner's objections, Engineer considers the Work substantially complete, Engineer will, within said 14 days, execute and deliver to Owner and Contractor a definitive certificate of Substantial Completion (with a revised tentative list of items to be completed or corrected) reflecting such changes from the tentative certificate as Engineer believes justified after consideration of any objections from Owner.

D. At the time of delivery of the tentative certificate of Substantial Completion, Engineer will deliver to Owner and Contractor a written recommendation as to division of responsibilities pending final payment between Owner and Contractor with respect to security, operation, safety, and protection of the Work, maintenance, heat, utilities, insurance, and warranties and guarantees. Unless Owner and Contractor agree otherwise in writing and so inform Engineer in writing prior to Engineer's issuing the definitive certificate of Substantial Completion, Engineer's aforesaid recommendation will be binding on Owner and Contractor until final payment.

E. Owner shall have the right to exclude Contractor from the Site after the date of Substantial Completion subject to allowing Contractor reasonable access to remove its property and complete or correct items on the tentative list.

14.05 *Partial Utilization*

A. Prior to Substantial Completion of all the Work, Owner may use or occupy any substantially completed part of the Work which has specifically been identified in the Contract Documents, or which Owner, Engineer, and Contractor agree constitutes a separately functioning and usable part of the Work that can be used by Owner for its intended purpose without significant interference with Contractor's performance of the remainder of the Work, subject to the following conditions:


**Copyright © 2007 National Society of Professional Engineers for EJCDC. All rights reserved.**

1. Owner at any time may request Contractor in writing to permit Owner to use or occupy any such part of the Work which Owner believes to be ready for its intended use and substantially complete. If and when Contractor agrees that such part of the Work is substantially complete, Contractor, Owner, and Engineer will follow the procedures of Paragraph 14.04.A through D for that part of the Work.

2. Contractor at any time may notify Owner and Engineer in writing that Contractor considers any such part of the Work ready for its intended use and substantially complete and request Engineer to issue a certificate of Substantial Completion for that part of the Work.

3. Within a reasonable time after either such request, Owner, Contractor, and Engineer shall make an inspection of that part of the Work to determine its status of completion. If Engineer does not consider that part of the Work to be substantially complete, Engineer will notify Owner and Contractor in writing giving the reasons therefor. If Engineer considers that part of the Work to be substantially complete, the provisions of Paragraph 14.04 will apply with respect to certification of Substantial Completion of that part of the Work and the division of responsibility in respect thereof and access thereto.

4. No use or occupancy or separate operation of part of the Work may occur prior to compliance with the requirements of Paragraph 5.10 regarding property insurance.

14.06 *Final Inspection*

A. Upon written notice from Contractor that the entire Work or an agreed portion thereof is complete, Engineer will promptly make a final inspection with Owner and Contractor and will notify Contractor in writing of all particulars in which this inspection reveals that the Work is incomplete or defective. Contractor shall immediately take such measures as are necessary to complete such Work or remedy such deficiencies.

14.07 *Final Payment*

A. *Application for Payment:*

1. After Contractor has, in the opinion of Engineer, satisfactorily completed all corrections identified during the final inspection and has delivered, in accordance with the Contract Documents, all maintenance and operating instructions, schedules, guarantees, bonds, certificates or other evidence of insurance, certificates of inspection, marked-up record documents (as provided in Paragraph 6.12), and other documents, Contractor may make application for final payment following the procedure for progress payments.

2. The final Application for Payment shall be accompanied (except as previously delivered) by:

a. all documentation called for in the Contract Documents, including but not limited to the evidence of insurance required by Paragraph 5.04.B.6;

b. consent of the surety, if any, to final payment;

c. a list of all Claims against Owner that Contractor believes are unsettled; and


**Copyright © 2007 National Society of Professional Engineers for EJCDC. All rights reserved.**

d. complete and legally effective releases or waivers (satisfactory to Owner) of all Lien rights arising out of or Liens filed in connection with the Work.

3. In lieu of the releases or waivers of Liens specified in Paragraph 14.07.A.2 and as approved by Owner, Contractor may furnish receipts or releases in full and an affidavit of Contractor that: (i) the releases and receipts include all labor, services, material, and equipment for which a Lien could be filed; and (ii) all payrolls, material and equipment bills, and other indebtedness connected with the Work for which Owner might in any way be responsible, or which might in any way result in liens or other burdens on Owner's property, have been paid or otherwise satisfied. If any Subcontractor or Supplier fails to furnish such a release or receipt in full, Contractor may furnish a bond or other collateral satisfactory to Owner to indemnify Owner against any Lien.

B. *Engineer's Review of Application and Acceptance:*

1. If, on the basis of Engineer's observation of the Work during construction and final inspection, and Engineer's review of the final Application for Payment and accompanying documentation as required by the Contract Documents, Engineer is satisfied that the Work has been completed and Contractor's other obligations under the Contract Documents have been fulfilled, Engineer will, within ten days after receipt of the final Application for Payment, indicate in writing Engineer's recommendation of payment and present the Application for Payment to Owner for payment. At the same time Engineer will also give written notice to Owner and Contractor that the Work is acceptable subject to the provisions of Paragraph 14.09. Otherwise, Engineer will return the Application for Payment to Contractor, indicating in writing the reasons for refusing to recommend final payment, in which case Contractor shall make the necessary corrections and resubmit the Application for Payment.

C. *Payment Becomes Due:*

1. Thirty days after the presentation to Owner of the Application for Payment and accompanying documentation, the amount recommended by Engineer, less any sum Owner is entitled to set off against Engineer's recommendation, including but not limited to liquidated damages, will become due and will be paid by Owner to Contractor.

14.08 *Final Completion Delayed*

A. If, through no fault of Contractor, final completion of the Work is significantly delayed, and if Engineer so confirms, Owner shall, upon receipt of Contractor's final Application for Payment (for Work fully completed and accepted) and recommendation of Engineer, and without terminating the Contract, make payment of the balance due for that portion of the Work fully completed and accepted. If the remaining balance to be held by Owner for Work not fully completed or corrected is less than the retainage stipulated in the Agreement, and if bonds have been furnished as required in Paragraph 5.01, the written consent of the surety to the payment of the balance due for that portion of the Work fully completed and accepted shall be submitted by Contractor to Engineer with the Application for such payment. Such payment shall be made under the terms and conditions governing final payment, except that it shall not constitute a waiver of Claims.


**Copyright © 2007 National Society of Professional Engineers for EJCDC. All rights reserved.**

14.09 *Waiver of Claims*

A. The making and acceptance of final payment will constitute:

1. a waiver of all Claims by Owner against Contractor, except Claims arising from unsettled Liens, from defective Work appearing after final inspection pursuant to Paragraph 14.06, from failure to comply with the Contract Documents or the terms of any special guarantees specified therein, or from Contractor's continuing obligations under the Contract Documents; and

2. a waiver of all Claims by Contractor against Owner other than those previously made in accordance with the requirements herein and expressly acknowledged by Owner in writing as still unsettled.

## ARTICLE 15 – SUSPENSION OF WORK AND TERMINATION

15.01 *Owner May Suspend Work*

A. At any time and without cause, Owner may suspend the Work or any portion thereof for a period of not more than 90 consecutive days by notice in writing to Contractor and Engineer which will fix the date on which Work will be resumed. Contractor shall resume the Work on the date so fixed. Contractor shall be granted an adjustment in the Contract Price or an extension of the Contract Times, or both, directly attributable to any such suspension if Contractor makes a Claim therefor as provided in Paragraph 10.05.

15.02 *Owner May Terminate for Cause*

A. The occurrence of any one or more of the following events will justify termination for cause:

1. Contractor's persistent failure to perform the Work in accordance with the Contract Documents (including, but not limited to, failure to supply sufficient skilled workers or suitable materials or equipment or failure to adhere to the Progress Schedule established under Paragraph 2.07 as adjusted from time to time pursuant to Paragraph 6.04);

2. Contractor's disregard of Laws or Regulations of any public body having jurisdiction;

3. Contractor's repeated disregard of the authority of Engineer; or

4. Contractor's violation in any substantial way of any provisions of the Contract Documents.

B. If one or more of the events identified in Paragraph 15.02.A occur, Owner may, after giving Contractor (and surety) seven days written notice of its intent to terminate the services of Contractor:

1. exclude Contractor from the Site, and take possession of the Work and of all Contractor's tools, appliances, construction equipment, and machinery at the Site, and use the same to the full extent they could be used by Contractor (without liability to Contractor for trespass or conversion);


**Copyright © 2007 National Society of Professional Engineers for EJCDC. All rights reserved.**

2. incorporate in the Work all materials and equipment stored at the Site or for which Owner has paid Contractor but which are stored elsewhere; and

3. complete the Work as Owner may deem expedient.

C. If Owner proceeds as provided in Paragraph 15.02.B, Contractor shall not be entitled to receive any further payment until the Work is completed. If the unpaid balance of the Contract Price exceeds all claims, costs, losses, and damages (including but not limited to all fees and charges of engineers, architects, attorneys, and other professionals and all court or arbitration or other dispute resolution costs) sustained by Owner arising out of or relating to completing the Work, such excess will be paid to Contractor. If such claims, costs, losses, and damages exceed such unpaid balance, Contractor shall pay the difference to Owner. Such claims, costs, losses, and damages incurred by Owner will be reviewed by Engineer as to their reasonableness and, when so approved by Engineer, incorporated in a Change Order. When exercising any rights or remedies under this Paragraph, Owner shall not be required to obtain the lowest price for the Work performed.

D. Notwithstanding Paragraphs 15.02.B and 15.02.C, Contractor's services will not be terminated if Contractor begins within seven days of receipt of notice of intent to terminate to correct its failure to perform and proceeds diligently to cure such failure within no more than 30 days of receipt of said notice.

E. Where Contractor's services have been so terminated by Owner, the termination will not affect any rights or remedies of Owner against Contractor then existing or which may thereafter accrue. Any retention or payment of moneys due Contractor by Owner will not release Contractor from liability.

F. If and to the extent that Contractor has provided a performance bond under the provisions of Paragraph 5.01.A, the termination procedures of that bond shall supersede the provisions of Paragraphs 15.02.B and 15.02.C.

15.03 *Owner May Terminate For Convenience*

A. Upon seven days written notice to Contractor and Engineer, Owner may, without cause and without prejudice to any other right or remedy of Owner, terminate the Contract. In such case, Contractor shall be paid for (without duplication of any items):

1. completed and acceptable Work executed in accordance with the Contract Documents prior to the effective date of termination, including fair and reasonable sums for overhead and profit on such Work;

2. expenses sustained prior to the effective date of termination in performing services and furnishing labor, materials, or equipment as required by the Contract Documents in connection with uncompleted Work, plus fair and reasonable sums for overhead and profit on such expenses;

3. all claims, costs, losses, and damages (including but not limited to all fees and charges of engineers, architects, attorneys, and other professionals and all court or arbitration or other


**Copyright © 2007 National Society of Professional Engineers for EJCDC. All rights reserved.**

dispute resolution costs) incurred in settlement of terminated contracts with Subcontractors, Suppliers, and others; and

4. reasonable expenses directly attributable to termination.

B. Contractor shall not be paid on account of loss of anticipated profits or revenue or other economic loss arising out of or resulting from such termination.

15.04 *Contractor May Stop Work or Terminate*

A. If, through no act or fault of Contractor, (i) the Work is suspended for more than 90 consecutive days by Owner or under an order of court or other public authority, or (ii) Engineer fails to act on any Application for Payment within 30 days after it is submitted, or (iii) Owner fails for 30 days to pay Contractor any sum finally determined to be due, then Contractor may, upon seven days written notice to Owner and Engineer, and provided Owner or Engineer do not remedy such suspension or failure within that time, terminate the Contract and recover from Owner payment on the same terms as provided in Paragraph 15.03.

B. In lieu of terminating the Contract and without prejudice to any other right or remedy, if Engineer has failed to act on an Application for Payment within 30 days after it is submitted, or Owner has failed for 30 days to pay Contractor any sum finally determined to be due, Contractor may, seven days after written notice to Owner and Engineer, stop the Work until payment is made of all such amounts due Contractor, including interest thereon. The provisions of this Paragraph 15.04 are not intended to preclude Contractor from making a Claim under Paragraph 10.05 for an adjustment in Contract Price or Contract Times or otherwise for expenses or damage directly attributable to Contractor's stopping the Work as permitted by this Paragraph.

## ARTICLE 16 – DISPUTE RESOLUTION

16.01 *Methods and Procedures*

A. Either Owner or Contractor may request mediation of any Claim submitted to Engineer for a decision under Paragraph 10.05 before such decision becomes final and binding. The mediation will be governed by the Construction Industry Mediation Rules of the American Arbitration Association in effect as of the Effective Date of the Agreement. The request for mediation shall be submitted in writing to the American Arbitration Association and the other party to the Contract. Timely submission of the request shall stay the effect of Paragraph 10.05.E.

B. Owner and Contractor shall participate in the mediation process in good faith. The process shall be concluded within 60 days of filing of the request. The date of termination of the mediation shall be determined by application of the mediation rules referenced above.

C. If the Claim is not resolved by mediation, Engineer's action under Paragraph 10.05.C or a denial pursuant to Paragraphs 10.05.C.3 or 10.05.D shall become final and binding 30 days after termination of the mediation unless, within that time period, Owner or Contractor:

1. elects in writing to invoke any dispute resolution process provided for in the Supplementary Conditions; or


**Copyright © 2007 National Society of Professional Engineers for EJCDC. All rights reserved.**

2. agrees with the other party to submit the Claim to another dispute resolution process; or

3. gives written notice to the other party of the intent to submit the Claim to a court of competent jurisdiction.

## ARTICLE 17 – MISCELLANEOUS

17.01 *Giving Notice*

A. Whenever any provision of the Contract Documents requires the giving of written notice, it will be deemed to have been validly given if:

1. delivered in person to the individual or to a member of the firm or to an officer of the corporation for whom it is intended; or

2. delivered at or sent by registered or certified mail, postage prepaid, to the last business address known to the giver of the notice.

17.02 *Computation of Times*

A. When any period of time is referred to in the Contract Documents by days, it will be computed to exclude the first and include the last day of such period. If the last day of any such period falls on a Saturday or Sunday or on a day made a legal holiday by the law of the applicable jurisdiction, such day will be omitted from the computation.

17.03 *Cumulative Remedies*

A. The duties and obligations imposed by these General Conditions and the rights and remedies available hereunder to the parties hereto are in addition to, and are not to be construed in any way as a limitation of, any rights and remedies available to any or all of them which are otherwise imposed or available by Laws or Regulations, by special warranty or guarantee, or by other provisions of the Contract Documents. The provisions of this Paragraph will be as effective as if repeated specifically in the Contract Documents in connection with each particular duty, obligation, right, and remedy to which they apply.

17.04 *Survival of Obligations*

A. All representations, indemnifications, warranties, and guarantees made in, required by, or given in accordance with the Contract Documents, as well as all continuing obligations indicated in the Contract Documents, will survive final payment, completion, and acceptance of the Work or termination or completion of the Contract or termination of the services of Contractor.

17.05 *Controlling Law*

A. This Contract is to be governed by the law of the state in which the Project is located.

17.06 *Headings*

A. Article and paragraph headings are inserted for convenience only and do not constitute parts of these General Conditions.


**Copyright © 2007 National Society of Professional Engineers for EJCDC. All rights reserved.**

# VIII-A

# CDBG – GENERAL CONDITIONS FOR CONSTRUCTION CONTRACTS

# General Conditions for Construction Contracts

1) Contract and Contract Documents

   a) The project to be constructed pursuant to this contract will be financed with assistance from the Texas Department of Agriculture - Office of Rural Affairs through a Community Development Block Grant (TxCDBG) and is subject to all applicable Federal and State laws and regulations.

   b) The Plans, Specifications and Addenda shall form part of this contract and the provisions thereof shall be binding upon the parties as if they were herein fully set forth.

2) Definitions

Whenever used in any of the Contract Documents, the following meanings shall be given to the terms here in defined:

   a) The term "Contract" means the Contract executed between the (Name of City/County), hereinafter called the “City/County” and (Name of Construction Co.), hereinafter called “Contractor”, of which these GENERAL CONDITIONS, form a part.

   b) The term "Project Area" means the area within the specified Contract limits of the Improvements contemplated to be constructed in whole or in part under this contract.

   c) The term "Engineer" means (name of engineering firm), Engineer in charge, serving the City/County with architectural or engineering services, his successor, or any other person or persons, employed by the City/County for the purpose of directing or having in charge the work embraced in this Contract.

   d) The term "Contract Documents" means and shall include the following: Executed Contract, Addenda (if any), Invitation for Bids, Instructions to Bidders, Signed Copy of Bid, General Conditions, Special Conditions, Technical Specifications, and Drawings (as listed in the Schedule of Drawings).

3. Supervision by Contractor

   a) Except where the Contractor is an individual and personally supervises the work, the Contractor shall provide a competent superintendent, satisfactory to the Engineer, on the work at all times during working hours with full authority to act as Contractor’s agent. The Contractor shall also provide adequate staff for the proper coordination and expediting of his work.

   b) The Contractor shall be responsible for all work executed under the Contract. Contractor shall verify all figures and elevations before proceeding with the work and will be held responsible for any error resulting from his failure to do so.

4. Subcontracts

   a) The Contractor shall not execute an agreement with any subcontractor or permit any subcontractor to perform any work included in this contract until Contractor has verified the subcontractor is eligible to participate in federally funded contracts.

b) No proposed subcontractor shall be disapproved by the City/County except for cause.

c) The Contractor shall be as fully responsible to the City/County for the acts and omissions of his subcontractors, and of persons either directly or indirectly employed by them.

d) Nothing contained in the Contract shall create any contractual relation between any subcontractor and the City/County.

5. Fitting and Coordination of Work

The Contractor shall be responsible for the proper fitting of all work and for the coordination of the operations of all trades, subcontractors, or material suppliers engaged upon this Contract.

6. Payments to Contractor

a) Partial Payments

i) The Contractor shall prepare the requisition for partial payment as of the last day of the month and submit it, with the required number of copies, to the Engineer for approval. The amount of the payment due the Contractor shall be determined by adding to the total value of work completed to date, the value of materials properly stored on the site and deduct [5% retainage is advised] to be retained until final payment, and (2) the amount of all previous payments. The total value of work completed to date shall be based on the estimated quantities of work completed and on the unit prices contained in the agreement. The value of materials properly stored on the site shall be based upon the estimated quantities of such materials and the invoice prices. Copies of all invoices shall be available for inspection of the Engineer.

ii) Monthly or partial payments made by the City/County to the Contractor are advanced for the purpose of assisting the contractor to expedite the work of construction. The Contractor shall be responsible for the care and protection of all materials and work upon which payments have been made until final acceptance of such work and materials by the City/County. Such payments shall not constitute a waiver of the right of the City/County to require the fulfillment of all terms of the Contract and the delivery of all improvements embraced in this Contract complete and satisfactory to the City/County in all details.

b) Final Payment

i) After final inspection and the acceptance by the City/County of all work under the Contract, the Contractor shall prepare the requisition for final payment which shall be based upon the careful inspection of each item of work at the applicable unit prices stipulated in the Contract. The total amount of the final payment due the Contractor under this Contract shall be the amount computed as described above less all previous payments.

ii) Before paying the final estimate, City/County shall require the Contractor to furnish releases or receipts from all subcontractors having performed any work and all persons having supplied materials, equipment (installed on the Project) and services to the Contractor. The City/County may make payment in part or in full to the Contractor without requiring the furnishing of such releases or receipts and any payments made shall in no way impair the obligations of any surety or sureties furnished under this Contract.

iii) Any amount due the City/County under Liquidated Damages shall be deducted from the final payment due the contractor.

c) Payments Subject to Submission of Certificates

i) Each payment to the Contractor by the City/County shall be made subject to submission by the Contractor of all written certifications required of it and its subcontractors.

d) Withholding Payments

i) The City/County may withhold any payment due the Contractor as deemed necessary to protect the City/County, and if so elects, may also withhold any amounts due from the Contractor to any subcontractors or material dealers, for work performed or material furnished by them. The foregoing provisions shall be construed solely for the benefit of the City/County and will not require the City/County to determine or adjust any claims or disputes between the Contractor and its subcontractors or material dealers, or to withhold any moneys for their protection unless the City/County elects to do so. The failure or refusal of the City/County to withhold any moneys from the Contractor shall in no way impair the obligations of any surety or sureties under any bond or bonds furnished under this Contract.

7. Changes in the Work

a) The City/County may make changes in the scope of work required to be performed by the Contractor under the Contract without relieving or releasing the Contractor from any obligations under the Contract or any guarantee given pursuant to the Contract provisions, and without affecting the validity of the guaranty bonds, and without relieving or releasing the surety or sureties of said bonds. All such work shall be executed under the terms of the original Contract unless it is expressly provided otherwise. Additionally, all such change orders must be approved by TxCDBG prior to execution of same.

b) Except for the purpose of affording protection against any emergency endangering health, life, limb or property, the Contractor shall make no change in the materials used or in the specified manner of constructing and/or installing the improvements or supply additional labor, services or materials beyond that actually required for the execution of the Contract, unless in pursuance of a written order from the City/County authorizing the Contractor to proceed with the change. No claim for an adjustment of the Contract Price will be valid unless so ordered.

c) If applicable unit prices are contained in the Contract, the City/County may order the Contractor to proceed with desired unit prices specified in the Contract; provided that in case of a unit price contract the net value of all changes does not increase the original total amount of the agreement by more than twenty-five percent (25%) or decrease the original the total amount by eighteen percent (18%).

d) Each change order shall include in its final form:

i) A detailed description of the change in the work.

ii) The Contractor's proposal (if any) or a confirmed copy thereof.

iii) A definite statement as to the resulting change in the contract price and/or time.

iv) The statement that all work involved in the change shall be performed in accordance with contract requirements except as modified by the change order.

v) The procedures as outlined in this Section for a unit price contract also apply in any lump sum contract.

8. Claims for Extra Cost

a) If the Contractor claims that any instructions by Drawings or otherwise involve extra cost or extension of time, he shall, within ten days after the receipt of such instructions, and in any event before proceeding to execute the work, submit his protest thereto in writing to the City/County, stating clearly and in detail the basis of his objections. No such claim will be considered unless so made.

b) Claims for additional compensation for extra work, due to alleged errors in ground elevations, contour lines, or bench marks, will not be recognized unless accompanied by certified survey data, made prior to the time the original ground was disturbed, clearly showing that errors exist which resulted, or would result, in handling more material, or performing more work, than would be reasonably estimated from the Drawings and maps issued.

c) Any discrepancies which may be discovered between actual conditions and those represented by the Drawings and maps shall be reported at once to the City/County and work shall not proceed except at the Contractor's risk, until written instructions have been received from the City/County.

d) If, on the basis of the available evidence, the City/County determines that an adjustment of the Contract Price and/or time is justifiable, a change order shall be executed.

9. Termination, Delays, and Liquidated Damages

a) Right of the City/County to Terminate Contract for Convenience

i) City/County may at any time and for any reason terminate Contractor’s services and work at City/County's convenience upon providing written notice to the Contractor specifying the extent of termination and the effective date. Upon receipt of such notice, Contractor shall, unless the notice directs otherwise, immediately discontinue the work and placing of orders for materials, facilities and supplies in connection with the performance of this Agreement.

ii) Upon such termination, Firm shall be entitled to payment only as follows: (1) the actual cost of the work completed in conformity with this Agreement plus (2) such other costs actually incurred by Firm as are permitted by the prime contract and approved by City/County. There shall be deducted from such sums as provided in this subparagraph the amount of any payments made to Firm prior to the date of the termination of this Agreement. Firm shall not be entitled to any claim or claim of lien against City/County for any additional compensation or damages in the event of such termination and payment.

b) Right of the City/County to Terminate Contract for Cause

i) In the event that any of the provisions of this contract are violated by the Contractor, or by any subcontractors, the City/County may serve written notice upon the Contractor and the Surety of its intention to terminate the contract. The notices shall contain the reasons for such intention to terminate the contract, and unless such violation or delay shall cease and

satisfactory arrangement of correction be made within ten days, the contract shall, upon the expiration of said ten (10) days, cease and terminate. In the event of any such termination, the City/County shall immediately serve notice thereof upon the Surety and the Contractor. The Surety shall have the right to take over and perform the contract. Provided, however, that if the Surety does not commence performance thereof within ten (10) days from the date of the mailing to such Surety of notice of termination, the City/County may take over the work and complete the project by bid/contract or by force account at the expense of the Contractor and his Surety shall be liable to the City/County for any excess cost incurred. In such event the City/County may take possession of and utilize in completing the work, such materials, appliances, and plant as may be on the site of the work and necessary therefore.

c) Liquidated Damages for Delays.

i) If the work is not completed within the time stipulated in the applicable bid for Lump Sum or Unit Price Contract provided, the Contractor shall pay to the City/County as fixed, agreed, and liquidated damages (it being impossible to determine the actual damages occasioned by the delay) the amount of _____for each calendar day of delay, until the work is completed. The Contractor and Contractor's sureties shall be liable to the City/County for the amount thereof.

d) Excusable Delays.

i) The right of the Contractor to proceed shall not be terminated nor shall the Contractor be charged with liquidated damages for any delays in the completion of the work due to:

ii) Any acts of the Government, including controls or restrictions upon or requisitioning of materials, equipment, tools, or labor by reason of war, national defense, or any other national emergency;

iii) Any acts of the City/County;

iv) Causes not reasonably foreseeable by the parties to this Contract at the time of execution which are beyond the control and without the fault or negligence of the Contractor, including, but not restricted to, acts of God, terrorism, war, acts of another Contractor in the performance of some other contract with the City/County, fires, floods, epidemics, quarantine, restrictions, strikes, freight embargoes, and weather of unusual severity such as hurricanes, tornadoes, cyclones and other extreme weather conditions.

v) Provided, however, that the Contractor promptly notifies the City/County within ten (10) days in writing of the cause of the delay. Upon receipt of such notification, the City/County shall ascertain the facts and the cause and extent of delay. If, upon the basis of the facts and the terms of this contract, the delay is properly excusable, the City/County shall extend the time for completing the work for a period of time commensurate with the period of excusable delay.

10. Assignment or Novation

The Contractor shall not assign nor transfer, whether by assignment or novation, any of its rights, duties, benefits, obligations, liabilities, or responsibilities under this Contract without the written consent of the City/County. No assignment or novation of this Contract shall be valid unless the assignment or novation expressly provides that the assignment of any of the Contractor's rights or benefits under the

Contract is subject to a prior lien for labor performed, services rendered, and materials, tools, and equipment supplied for the performance of the work under this Contract in favor of all persons, Contractors, or corporations rendering such labor or services or supplying such materials, tools, or equipment.

11. Technical Specifications and Drawings

Anything mentioned in the Technical Specifications and not shown on the Drawings or vice versa shall be of like effect as if shown on or mentioned in both. In case of difference between Drawings and Technical Specifications, the Technical Specifications shall govern. In case of any discrepancy in Drawings, or Technical Specifications, the matter shall be immediately submitted to the City/County for review. Contractor shall be liable for any issues or expenses in the event the discrepancy is not submitted to the City/County.

12. Shop Drawings

a) All required shop drawings, machinery details, layout drawings, etc. shall be submitted to the Engineer in _____ copies for approval sufficiently in advance of requirements to afford ample time for checking, including time for correcting, resubmitting and rechecking if necessary. The Contractor may proceed, only at Contractor's own risk, with manufacture or installation of any equipment or work covered by said shop drawings, etc. until they are approved and no claim, by the Contractor, for extension of the contract time shall be granted by reason of his failure in this respect.

b) Any drawings submitted without the Contractor's stamp of approval will not be considered and will be returned to him for proper resubmission. If any drawings show variations from the requirements of the Contract because of standard shop practice or other reason, the Contractor shall make specific mention of such variation in his letter of transmittal in order that, if acceptable, suitable action may be taken for proper adjustment of contract price and/or time, otherwise the Contractor will not be relieved of the responsibility for executing the work in accordance with the Contract even though the drawings have been approved.

c) If a shop drawing is in accordance with the contract or involves only minor adjustment in the interest of the City/County not involving a change in contract price or time, the engineer may approve the drawing. The approval shall not relieve the Contractor from responsibility to adhere to the contract or for any error in the drawing.

13. Requests for Supplementary Information

It shall be the responsibility of the Contractor to make timely requests of the City/County for any additional information which should be furnished by the City/County under the terms of this Contract, and which is required in the planning and execution of the work. Such requests may be submitted from time to time as the need approaches, but each shall be filed in ample time to permit appropriate action to be taken by all parties involved so as to avoid delay. Each request shall be in writing, and list the various items and the latest date by which each will be required by the Contractor. The first list shall be submitted within two weeks after Contract award and shall be as complete as possible at that time. The Contractor shall, if requested, furnish promptly any assistance and information the Engineer may require in responding to these requests of the Contractor. The Contractor shall be fully responsible for any delay in his work or to others arising from his failure to comply fully with the provision of this section.

14. Materials and Workmanship

a) Unless otherwise specifically provided for in the technical specifications, all workmanship, equipment, materials and articles incorporated in the work shall be new and the best grade of the respective kinds for the purpose. Where equipment, materials, articles or workmanship are referred to in the technical specifications as "equal to" any particular standard, the Engineer shall decide the question of equality.

b) The Contractor shall furnish to the City/County for approval the manufacturer's detailed specifications for all machinery, mechanical and other special equipment, which he contemplates installing together with full information as to type, performance characteristics, and all other pertinent information as required, and shall likewise submit for approval full information concerning all other materials or articles which he proposes to incorporate.

c) Machinery, mechanical and other equipment, materials or articles installed or used without such prior approval shall be at the risk of subsequent rejection.

d) Materials specified by reference to the number or symbol of a specific standard, shall comply with requirements in the latest revision thereof and any amendment or supplement thereto in effect on the date of the Invitation for Bids, except as limited to type, class or grade, or modified in the technical specifications shall have full force and effect as though printed therein.

e) The City/County may require the Contractor to dismiss from the work such employee or employees as the City/County or the Engineer may deem unqualified.

f) Domestic Preferences - As appropriate and to the extent consistent with law and to the greatest extent practicable under a Federal award, provide a preference for the purchase, acquisition, or use of goods, products, or materials produced in the United States (including but not limited to iron, aluminum, steel, cement, and other manufactured products). The requirements of this section must be included in all subawards including all contracts and purchase orders for work or products under this award.

   i) For purposes of this section:
      (1) “Produced in the United States” means, for iron and steel products, that all manufacturing processes, from the initial melting stage through the application of coatings, occurred in the United States.

      (2) “Manufactured products” means items and construction materials composed in whole or in part of non-ferrous metals such as aluminum; plastics and polymer-based products such as polyvinyl chloride pipe; aggregates such as concrete; glass, including optical fiber; and lumber.

      (3) [Iron and steel products, Manufactured Products, and Construction Materials] used in this project comply with the Build America, Buy America Act (BABA) requirements mandated by Title IX of the Infrastructure Investment and Jobs Act (“IIJA”), Pub. L. 177-58.

15. Samples, Certificates and Tests
   a) The Contractor shall submit all material or equipment samples, certificates, affidavits, etc., as called for in the contract documents or required by the Engineer, promptly after award of the contract and acceptance of the Contractor's bond. No such material or equipment shall be manufactured or delivered to the site, except at the Contractor's own risk, until the required samples or certificates have been approved in writing by the Engineer. Any delay in the work caused by late or improper

submission of samples or certificates for approval shall not be considered just cause for an extension of the contract time.

b) Each sample submitted by the Contractor shall carry a label giving the name of the Contractor, the project for which it is intended, and the name of the producer. The accompanying certificate or letter from the Contractor shall state that the sample complies with contract requirements, shall give the name and brand of the product, its place of origin, the name and address of the producer and all specifications or other detailed information which will assist the Engineer in making a prompt decision regarding the acceptability of the sample. It shall also include the statement that all materials or equipment furnished for use in the project will comply with the samples and/or certified statements.

c) Approval of any materials shall be general only and shall not constitute a waiver of the City/County's right to demand full compliance with Contract requirements. After actual deliveries, the Engineer will have such check tests made as he deems necessary in each instance and may reject materials and equipment and accessories for cause, even though such materials and articles have been given general approval. If materials, equipment or accessories which fail to meet check tests have been incorporated in the work, the Engineer will have the right to cause their removal and replacement by proper materials or to demand and secure such reparation by the Contractor as is equitable.

d) Except as otherwise specifically stated in the Contract, the costs of sampling and testing will be divided as follows:

1) The Contractor shall furnish without extra cost, including packing and delivery charges, all samples required for testing purposes, except those samples taken on the project by the Engineer;

2) The Contractor shall assume all costs of re-testing materials which fail to meet contract requirements;

3) The Contractor shall assume all costs of testing materials offered in substitution for those found deficient;
4) The City/County will pay all other expenses.

16. <u>Permits and Codes</u>

a) The Contractor shall give all notices required by and comply with all applicable federal and state laws, ordinances, and codes of the Local Government. All construction work and/or utility installations shall comply with all applicable ordinances, and codes including all written waivers. Before installing any work, the Contractor shall examine the drawings and technical specifications for compliance with applicable ordinances and codes and shall immediately report any discrepancy to the City/County. Where the requirements of the drawings and technical specifications fail to comply with such applicable ordinances or codes, the City/County will adjust the Contract by Change Order to conform to such ordinances or codes (unless waivers in writing covering the difference have been granted by the governing body or department) and make appropriate adjustment in the Contract Price or stipulated unit prices.

b) Should the Contractor fail to observe the foregoing provisions and proceed with the construction and/or install any utility at variance with any applicable ordinance or code, including any written waivers (notwithstanding the fact that such installation is in compliance with the drawings and technical specifications), the Contractor shall remove such work without cost to the City/County.

c) The Contractor shall at his own expense, secure and pay for all permits for street pavement, sidewalks, shed, removal of abandoned water taps, sealing of house connection drains, pavement cuts, buildings, electrical, plumbing, water, gas and sewer permits required by the local regulatory body or any of its agencies.

d) The Contractor shall comply with applicable local laws and ordinances governing the disposal of surplus excavation, materials, debris and rubbish on or off the Project Area and commit no trespass on any public or private property in any operation due to or connected with the Improvements contained in this Contract.

e) The Contractor will be required to make arrangements for and pay the water, electrical power, or any other utilities required during construction.

f) During construction of this project, the Contractor shall use every means possible to control the amount of dust created by construction. Prior to the close of a day's work, the Contractor, if directed by the City/County, shall moisten the surrounding area to prevent a dusty condition.

17. Care of Work

a) The Contractor shall be responsible for all damages to person or property that occur as a result of its fault or negligence in connection with the prosecution of the work and shall be responsible for the proper care and protection of all materials delivered and work performed until completion and final acceptance.

b) In an emergency affecting the safety of life, limb or property, including adjoining property, the Contractor, without special instructions or authorization from the City/County is authorized to act to prevent such threatened loss or injury. Contractor shall follow all instructions of City/County.

c) The Contractor shall avoid damage as a result of his operations to existing sidewalks, streets, curbs, pavements, utilities (except those which are to be replaced or removed), adjoining property, etc., and shall be responsible for completely repairing any damage thereto caused by the operations.

d) The Contractor shall shore up, brace, underpin, secure, and protect as maybe necessary, all foundations and other parts of existing structures adjacent to, adjoining, and in the vicinity of the site, which may be in any way affected by the excavations or other operations connected with the construction of the improvements included in this Contract. The Contractor shall be responsible for the giving of any and all required notices to any adjoining or adjacent property owner or other party before the commencement of any work. The Contractor shall indemnify and save harmless the City/County from any damages on account of settlements or the loss of lateral support of adjoining property and from all loss or expense and all damages for which the City/County may become liable in consequence of such injury or damage to adjoining and adjacent structures and their premises.

18. Accident Prevention

a) No laborer or mechanic employed in the performance of this Contract shall be required to work in surroundings or under working conditions which are unsanitary, hazardous, or dangerous to his health or safety as determined under construction safety and health standards promulgated by the Department of Labor.

b) The Contractor shall exercise proper precaution at all times for the protection of persons and property and shall be responsible for all damages to persons or property, either on or off the site, which occur as a result of his prosecution of the work.

c) The Contractor shall maintain an accurate record of all cases of death, occupational disease, or injury requiring medical attention or causing loss of time from work, arising out of and in the course of employment on work under the Contract. The Contractor shall promptly furnish the City/County with reports concerning these matters.

d) The Contractor shall indemnify and hold harmless the City/County from any claims for damages resulting from property damage, personal injury and/or death suffered or alleged to have been suffered by any person as a result of any work conducted under this contract.

e) The Contractor shall provide trench safety for all excavations more than five feet deep prior to excavation. All OSHA Standards for trench safety must be adhered to by the Contractor.

f) The contractor shall at all time conduct work in such a manner as to ensure the least possible inconvenience to vehicular and pedestrian traffic. At the close of the work each day, all streets where possible in the opinion of the City/County, shall be opened to the public in order that persons living in the area may have access to their homes or businesses by the use of the streets. Barricades, warning signs, and necessary lighting shall be provided to the satisfaction of the City/County at the expense of the Contractor.

19. Sanitary Facilities

The Contractor shall furnish, install and maintain ample sanitary facilities for laborers. As the needs arise, a sufficient number of enclosed temporary toilets shall be conveniently placed as required. Drinking water shall be provided from an approved source, so piped or transported as to keep it safe and fresh and served from single service containers or satisfactory types of sanitary drinking stands or fountains. All such facilities and services shall be furnished in strict accordance with existing and governing health regulations.

20. Use of Premises

a) The Contractor shall confine equipment, storage of materials, and construction operations to the contract limits as shown on the drawings and as prescribed by ordinances or permits, or as may be desired by the City/County, and shall not unreasonably encumber the site or public rights of way with materials and construction equipment.

b) The Contractor shall comply with all reasonable instructions of the City/County and all existing federal, state and local regulations regarding signs, advertising, traffic, fires, explosives, danger signals, and barricades.

21. Removal of Debris, Cleaning, Etc.

The Contractor shall, periodically or as directed during the progress of the work, remove and legally dispose of all surplus excavated material and debris, and keep the Project Area and public rights of way reasonably clear. Upon completion of the work, he shall remove all temporary construction facilities, debris and unused materials provided for work, and put the whole site of the work and public rights of way in a neat and clean condition.

22. Inspection

a) All materials and workmanship shall be subject to inspection, examination, or test by the City/County and Engineer at any and all times during manufacture or construction and at any and all places where such manufacture or construction occurs. The City/County shall have the right to reject defective material and workmanship or require its correction. Unacceptable workmanship shall be satisfactorily corrected. Rejected material shall be promptly segregated and removed from the Project Area and replaced with material of specified quality without charge. If the Contractor fails to proceed at once with the correction of rejected workmanship or defective material, the City/County may by contract or otherwise have the defects remedied or rejected materials removed from the Project Area and charge the cost of the same against any Monies which may be due the Contractor, without prejudice to any other rights or remedies of the City/County.

b) The Contractor shall furnish promptly all materials reasonably necessary for any tests which may be required. All tests by the City/County will be performed in such manner as not to delay the work unnecessarily and will be made in accordance with the provisions of the technical specifications.

c) The Contractor shall notify the City/County sufficiently in advance of back filling or concealing any facilities to permit proper inspection. If any facilities are concealed without approval or consent of the City/County, the Contractor shall uncover for inspection and recover such facilities at Contractor's expense, when so requested by the City/County.

d) Should it be considered necessary or advisable by the City/County at any time before final acceptance of the entire work to make an examination of work already completed, the Contractor shall on request promptly furnish all necessary facilities, labor, and material. If such work is found to be defective in any important or essential respect, due to fault of the Contractor or subcontractors, the Contractor shall defray all the expenses of such examination and of satisfactory reconstruction. If, however, such work is found to meet the requirements of the Contract, the actual cost of labor and material necessarily involved in the examination and replacement, shall be reimbursable and if completion of the work of the entire Contract has been delayed, a suitable extension of time will be approved.

e) Inspection of materials and appurtenances to be incorporated in the improvements included in this Contract may be made at the place of production, manufacture or shipment, whenever the quantity justifies it, and such inspection and acceptance, unless otherwise stated in the technical specifications, shall be final, except as regards to: (1) latent defects, (2) departures from specific requirements of the Contract, (3) damage or loss in transit, or (4) fraud or such gross mistakes as amount to fraud. Subject to the requirements contained in the preceding sentence, the inspection of materials as a whole or in part will be made at the Project Site.

f) Neither inspection, testing, approval nor acceptance of the work in whole or in part, by the City/County or its agents shall relieve the Contractor or its sureties of full responsibility for materials furnished or work performed not in strict accordance with the Contract.

23. Review by City/County

The City/County and its authorized representatives and agents shall have access to and be permitted to observe and review all work, materials, equipment, payrolls, personnel records, employment

conditions, material invoices, and other relevant data and records pertaining to this Contract, provided, however that all instructions and approval with respect to the work will be given to the Contractor only by the City/County through its authorized representatives or agents.

24. Final Inspection

When the Improvements included in this Contract are substantially completed, the Contractor shall notify the City/County in writing that the work will be ready for final inspection on a definite date which shall be stated in the notice. The City/County will make the arrangements necessary to have final inspection commenced on the date stated in the notice, or as soon thereafter as is practicable.

25. Deduction for Uncorrected Work

If the City/County deems it not expedient to require the Contractor to correct work not done in accordance with the Contract Documents, an equitable deduction from the Contract Price will be made by agreement between the Contractor and the City/County and subject to settlement, in case of dispute, as herein provided.

26. Insurance

The Contractor shall not commence work under this contract until all required insurance under this paragraph has been secured and approved by the City/County.

a) Worker's Compensation Insurance: The Contractor shall procure and shall maintain during the life of this contract Worker's Compensation Insurance as required by the State of Texas for all of his employees to be engaged in work at the site of the project under this contract and, in case of any such work sublet, the Contractor shall require the subcontractor similarly to provide Worker's Compensation Insurance for all of the employees to be engaged in such work unless such employees are covered by the protection afforded by the Contractor's Worker's Compensation Insurance.

b) Contractor's Public Liability and Property Damage Insurance and Vehicle Liability Insurance. The Contractor shall procure and shall maintain during the life of this contract Contractor's Public Liability Insurance, Contractor's Property Damage Insurance and Vehicle Liability Insurance in the following amounts: (_____).

c) Proof of Insurance: The Contractor shall furnish the City/County with certificates showing the type, amount, class of operations covered, effective dates and date of expiration of policies. Such certificates shall also contain substantially the following statement: "The insurance covered by this certificate will not be canceled or materially altered, except after ten (10) days written notice has been received by the City/County."

27. Warranty of Title

No material, supplies, or equipment to be installed or furnished under this Contract shall be purchased subject to any chattel mortgage or under a conditional sale, lease-purchase or other agreement by which an interest is retained by the seller or supplier. The Contractor shall warrant good title to all materials, supplies, and equipment installed or incorporated in the work and upon completion of all work, shall deliver the same, together with all improvements and appurtenances constructed or placed by Contractor, to the City/County free from any claims, liens, or charges. Neither the Contractor nor

any person, firm, or corporation furnishing any material or labor for any work covered by this Contract shall have any right to a lien upon any improvement or appurtenance. Nothing contained in this paragraph, however, shall defeat or impair the right of persons furnishing materials or labor to recover under any law permitting such persons to look to funds due the Contractor. The provisions of this paragraph shall be inserted in all subcontracts and material contracts and notice of its provisions shall be given to all persons furnishing materials for the work when no formal contract is entered into for such materials.

28. Warranty of Workmanship and Materials

Neither the final certificate of payment nor any provision in the Contract nor partial or entire use of the improvements included in this Contract by the City/County or the public shall constitute an acceptance of work not done in accordance with the Contract or relieve the Contractor of liability in respect to any express warranties or responsibility for faulty materials or workmanship. The Contractor shall promptly remedy any defects in the work and pay for any damage to other work resulting therefrom which shall appear within a period of _____ months from the date of final acceptance of the work.

29. Job Offices

a) The Contractor and its subcontractors may maintain such office and storage facilities on the site as are necessary for the proper conduct of the work. These shall be located so as to cause no interference to any work to be performed on the site. The City/County shall be consulted with regard to locations.
b) Upon completion of the improvements, or as directed by the City/County, the Contractor shall remove all such temporary structures and facilities from the site, and leave the site of the work in the condition required by the Contract.

30. Partial Use of Site Improvements

The City/County may give notice to the Contractor and place in use those sections of the improvements which have been completed, inspected and can be accepted as complying with the technical specifications and if in its opinion, each such section is reasonably safe, fit, and convenient for the use and accommodation for which it was intended, provided:

a) The use of such sections of the Improvements shall in no way impede the completion of the remainder of the work by the Contractor.

b) The Contractor shall not be responsible for any damages or maintenance costs due directly to the use of such sections.

31. Local Program Liaison

For purposes of this Agreement, the [*e.g. City Manager/County*] or equivalent authorized person will serve as the Local Program Liaison and primary point of contact for the Contractor. All required progress reports and communication regarding the project shall be directed to this liaison and other local personnel as appropriate.

32. Access to Information

a) The U.S. Department of Housing and Urban Development (HUD), Inspectors General, the Comptroller General of the United States, the Texas Department of Agriculture (TDA), and the City/County, or any of their authorized representatives, shall have access to any documents,

papers, or other records of the Contractor which are pertinent to the TxCDBG award, in order to make audits, examinations, excerpts, and transcripts, and to closeout the City's/County's TxCDBG contract with TDA.

b) Contractor shall include the substance of this clause in all subcontracts it awards.

33. Records Retention

a) The Contractor shall retain all required records for three years after the City/County makes its final payment and all pending matters are closed.

b) Contractor shall include the substance of this clause in all subcontracts it awards.

34. Resolution of Program Non-Compliance and Disallowed Costs

In the event of any dispute, claim, question, or disagreement arising from or relating to this Contract, or the breach thereof, including determination of responsibility for any costs disallowed as a result of non-compliance with federal, state or TxCDBG program requirements, the parties hereto shall use their best efforts to settle the dispute, claim, question or disagreement. To this effect, the parties shall consult and negotiate with each other in good faith within 30 days of receipt of a written notice of the dispute or invitation to negotiate, and attempt to reach a just and equitable solution satisfactory to both parties. If the matter is not resolved by negotiation within 30 days of receipt of written notice or invitation to negotiate, the parties agree first to try in good faith to settle the matter by mediation administered by the American Arbitration Association under its Commercial Mediation Procedures before resorting to arbitration, litigation, or some other dispute resolution procedure. The parties may enter into a written amendment to this Contract and choose a mediator that is not affiliated with the American Arbitration Association. The parties shall bear the costs of such mediation equally. *[This section may also provide for the qualifications of the mediator(s), the locale of meetings, time limits, or any other item of concern to the parties.]* If the matter is not resolved through such mediation within 60 days of the initiation of that procedure, either party may proceed to file suit.

35. Compliance with Davis-Bacon Act

All laborers and mechanics employed upon the work covered by this Contract shall be paid unconditionally and not less often than once each week, and without subsequent deduction or rebate on any account (except such payroll deductions as are made mandatory by law and such other payroll deductions as are permitted by the applicable regulations issued by the Secretary of Labor, United States Department of Labor, pursuant to the Anti-Kickback Act hereinafter identified), the full amount due at time of payment computed at wage rates not less than those contained in the wage determination decision of said Secretary of Labor (a copy of which is attached as Attachment __ and herein incorporated by reference), regardless of any contractual relationship which may be alleged to exist between the Contractor or any subcontractor and such laborers and mechanics. All laborers and mechanics employed upon such work shall be paid in cash, except that payment may be by check if the employer provides or secures satisfactory facilities approved by the City/County for the cashing of the same without cost or expense to the employee. For the purpose of this clause, contributions made or costs reasonably anticipated under Section 1 (b) (2) of the Davis-Bacon Act on behalf of laborers or mechanics are considered wages paid to such laborers or mechanics, subject to the provisions of Section 5.5 (a) (1) (iv) of Title 29, Code of Federal Regulations. Also for the purpose of this clause, regular contributions made or costs incurred for more than a weekly period under plans, funds, or programs, but covering the particular weekly period, are deemed to be constructively made or incurred during such weekly period.

The Contractor and its subcontractors shall not, by any means, induce any person employed in the construction, completion, or repair of public work, give up any part of the compensation to which he or she is otherwise entitled. The City/County must report all suspected or reported violations to TDA.

36. Conflicts of interest.

a) Governing Body. No member of the governing body of the City/County and no other officer, employee, or agent of the City/County, who exercises any functions or responsibilities in connection with administration, construction, engineering, or implementation of TxCDBG award between TDA and the City / County, shall have any personal financial interest, direct or indirect, in the Contractor or this Contract; and the Firm shall take appropriate steps to assure compliance.

b) Other Local Public Officials. No other public official, who exercises any functions or responsibilities in connection with the planning and carrying out of administration, construction, engineering or implementation of the TxCDBG award between TDA and the City/County, shall have any personal financial interest, direct or indirect, in the Contractor or this Contract; and the Contractor shall take appropriate steps to assure compliance.

c) The Contractor and Employees. The Contractor warrants and represents that it has no conflict of interest associated with the TxCDBG award between TDA and the City/County or this Contract. The Contractor further warrants and represents that it shall not acquire an interest, direct or indirect, in any geographic area that may benefit from the TxCDBG award between TDA and the City/County or in any business, entity, organization or person that may benefit from the award. The Contractor further agrees that it will not employ an individual with a conflict of interest as described herein.

37. Debarment and Suspension (Executive Orders 12549 and 12689)

The Contractor certifies, by entering into this Contract, that neither it nor its principals are presently debarred, suspended, or otherwise excluded from or ineligible for participation in federally-assisted programs under Executive Orders 12549 (1986) and 12689 (1989). The term “principal” for purposes of this Contract is defined as an officer, director, owner, partner, key employee, or other person with primary management or supervisory responsibilities, or a person who has a critical influence on or substantive control over the operations of the Contractor. The Contractor understands that it must not make any award or permit any award (or contract) at any tier to any party which is debarred or suspended or is otherwise excluded from or ineligible for participation in Federal assistance programs under Executive Order 12549, “Debarment and Suspension.”

38. [For Contracts that exceed $100,000] Anti-Lobbying

Contractor shall file the required certification: The undersigned certifies, to the best of his or her knowledge and belief, that:

(a) No Federal appropriated funds have been paid or will be paid, by or on behalf of the undersigned, to any person for influencing or attempting to influence an officer or employee of an agency, a Member of Congress, an officer or employee of Congress, or an employee of a Member of Congress in connection with the awarding of any Federal contract, the making of any Federal grant, the making of any Federal loan, the entering into of any cooperative agreement, and the

extension, continuation, renewal, amendment, or modification of any Federal contract, grant, loan, or cooperative agreement.

(b) If any funds other than Federal appropriated funds have been paid or will be paid to any person for influencing or attempting to influence an officer or employee of any agency, a Member of Congress, an officer or employee of Congress, or an employee of a Member of Congress in connection with this Federal contract, grant, loan, or cooperative agreement, the undersigned shall complete and submit Standard Form-LLL, "Disclosure Form to Report Lobbying," in accordance with its instructions.

(c) The undersigned shall require that the language of this certification be included in the award documents for all subawards at all tiers (including subcontracts, subgrants, and contracts under grants, loans, and cooperative agreements) and that all subrecipients shall certify and disclose accordingly.

39. [For Contracts > $100K] Overtime Requirements

No Contractor or subcontractor contracting for any part of the Contract work which may require or involve the employment of laborers or mechanics, including watchmen and guards, shall require or permit any laborer or mechanic in any workweek in which he is employed on such work to work in excess of 40 hours in such work week unless such laborer or mechanic receives compensation at a rate not less than one and one-half times his basic rate of pay for all hours worked in excess of 40 hours in such work week, as the case may be.

40. [For Contracts > $150K] Clean Air Act and the Federal Water Pollution Control Act

The Contractor or subcontractor shall comply with all applicable standards, orders or regulations issued pursuant to the Clean Air Act (42 U.S.C. 7401–7671q) and the Federal Water Pollution Control Act as amended (33 U.S.C. 1251–1387). Violations must be reported to the Federal awarding agency and the Regional Office of the Environmental Protection Agency (EPA).

41. Equal Opportunity Clause [applicable to contracts and subcontracts over $10,000].

During the performance of this contract, the Contractor agrees as follows:

a) The Contractor will not act against any employee or applicant for employment because of race, color, religion, sex, sexual orientation, gender identity, or national origin. The Contractor will take affirmative action to ensure that applicants are employed, and that employees are treated during employment without regard to their race, color, religion, sex, sexual orientation, gender identity, or national origin. Such action shall include, but not be limited to the following: Employment, upgrading, demotion, or transfer; recruitment or recruitment advertising; layoff or termination; rates of pay or other forms of compensation; and selection for training, including apprenticeship. The Contractor agrees to post in conspicuous places, available to employees and applicants for employment, notices to be provided setting forth the provisions of this nondiscrimination clause.

b) The Contractor will, in all solicitations or advertisements for employees placed by or on behalf of the Contractor, state that all qualified applicants will receive considerations for employment without regard to race, color, religion, sex, sexual orientation, gender identity, or national origin.

c) The Contractor will not discourage or in any other manner discriminate against any employee or applicant for employment because such employee or applicant has inquired about, discussed, or disclosed the compensation of the employee or applicant or another employee or applicant. This provision shall not apply to instances in which an employee who has access to the compensation information of other employees or applicants as a part of such employee's essential job functions discloses the compensation of such other employees or applicants to individuals who do not

otherwise have access to such information, unless such disclosure is in response to a formal complaint or charge, in furtherance of an investigation, proceeding, hearing, or action, including an investigation conducted by the employer, or is consistent with the contractor's legal duty to furnish information.

d) The Contractor will send to each labor union or representative of workers with which he has a collective bargaining agreement or other contract or understanding, a notice to be provided advising the said labor union or workers' representatives of the Contractor's commitments under this section, and shall post copies of the notice in conspicuous places available to employees and applicants for employment.

e) The Contractor will comply with all provisions of Executive Order 11246 of September 24, 1965, "Equal Employment Opportunity," and of the rules, regulations, and relevant orders of the Secretary of Labor.

f) The Contractor will furnish all information and reports required by Executive Order 11246 of September 24, 1965, and by rules, regulations, and orders of the Secretary of Labor, or pursuant thereto, and will permit access to his books, records, and accounts by the administering agency and the Secretary of Labor for purposes of investigation to ascertain compliance with such rules, regulations, and orders.

g) In the event of the Contractor's noncompliance with the nondiscrimination clauses of this contract or with any of the said rules, regulations, or orders, this contract may be canceled, terminated, or suspended in whole or in part and the Contractor may be declared ineligible for further Government contracts or federally assisted construction contracts in accordance with procedures authorized in Executive Order 11246 of September 24, 1965, and such other sanctions may be imposed and remedies invoked as provided in Executive Order 11246 of September 24, 1965, or by rule, regulation, or order of the Secretary of Labor, or as otherwise provided by law.

h) The Contractor will include the portion of the sentence immediately preceding paragraph (a) and the provisions of paragraphs (a) through (h) in every subcontract or purchase order unless exempted by rules, regulations, or orders of the Secretary of Labor issued pursuant to section 204 of Executive Order 11246 of September 24, 1965, so that such provisions will be binding upon each subcontractor or vendor. The Contractor will take such action with respect to any subcontract or purchase order as the administering agency may direct as a means of enforcing such provisions, including sanctions for noncompliance: Provided, however, That in the event a Contractor becomes involved in, or is threatened with, litigation with a subcontractor or vendor as a result of such direction by the administering agency the Contractor may request the United States to enter into such litigation to protect the interests of the United States.

42. Section 109 of the Housing and Community Development Act of 1974.

The Contractor shall comply with the provisions of Section 109 of the Housing and Community Development Act of 1974. No person in the United States shall on the ground of race, color, national origin, religion, or sex be excluded from participation in, be denied the benefits of, or be subjected to discrimination under any program or activity funded in whole or in part with funds made available under this title.

43. Section 504 Rehabilitation Act of 1973, as amended.

The Contractor agrees that no otherwise qualified individual with disabilities shall, solely by reason of his/her disability, be denied the benefits of, or be subjected to discrimination, including discrimination in employment, under any program or activity receiving federal financial assistance.

44. Age Discrimination Act of 1975.

a) The Contractor shall comply with the Age Discrimination Act of 1975 which provides that no person in the United States shall on the basis of age be excluded from participation in, be denied the benefits of, or be subjected to discrimination under any program or activity receiving federal financial assistance.

45. Economic Opportunities for Section 3 Residents and Section 3 Business Concerns.

a) The work to be performed under this Contract is subject to the requirements of section 3 of the Housing and

b) Urban Development (HUD) Act of 1968, as amended, 12 U.S.C. 1701u (section 3). The purpose of section 3 isto ensure that employment and other economic opportunities generated by HUD assistance or HUD-assisted projects covered by section 3, shall, to the greatest extent feasible, be directed to low- and very low-income persons, particularly persons who are recipients of HUD assistance for housing.

c) The parties to this Contract agree to comply with HUD's regulations in 24 CFR part 75, which implement section 3. As evidenced by their execution of this Contract, the parties to this Contract certify that they are under no contractual or other impediment that would prevent them from complying with the part 75 regulations.

d) The Contractor agrees to include this section 3 clause in every subcontract subject to compliance with regulations in 24 CFR part 75, and agrees to take appropriate action, as provided in an applicable provision of the subcontract or in this section 3 clause, upon a finding that the subcontractor is in violation of the regulations in 24 CFR part 75. The Contractor will not subcontract with any subcontractor where the Contractor has notice or knowledge that the subcontractor has been found in violation of the regulations in 24 CFR part 75.

e) The Contractor will certify that any vacant employment positions, including training positions, that are filled (1) after the Contractor is selected but before the contract is executed, and (2) with persons other than those to whom the regulations of 24 CFR part 75 require employment opportunities to be directed, were not filled to circumvent the Contractor's obligations under 24 CFR part 75. Minimum expectations of effort to direct employment opportunities to such workers are identified in the TxCDBG Project Implementation Manual.

f) Noncompliance with HUD's regulations in 24 CFR part 75 may result in sanctions, termination of this Contract for default, and debarment or suspension from future HUD assisted contracts.

46. Contract Documents and Drawings

The City/County will furnish the Contractor without charge _____copies of the Contract Documents, including Technical Specifications and Drawings. Additional copies requested by the Contractor will be furnished at cost.

47. Contract Period

The work to be performed under this contract shall commence within the time stipulated by the City/County in the Notice to Proceed, and shall be fully completed within _____ calendar days thereafter.

48. Liquidated Damages

Since the actual damages for any delay in completion of the work under this contract are impossible to determine, the Contractor and his Sureties shall be liable for and shall pay to the City/County the sum of _____Dollars ($_____) as fixed, agreed and liquidated damages for each calendar day of delay from the above stipulated time for completion.

49. [FOR CONTRACTS $100,000 AND OVER] Verification No Boycott Israel

As required by Chapter 2270, Government Code, CONTRACTOR hereby verifies that it does not boycott Israel and will not boycott Israel through the term of this Agreement. For purposes of this verification, “boycott Israel” means refusing to deal with, terminating business activities with, or otherwise taking any action that is intended to penalize, inflict economic harm on, or limit commercial relations specifically with Israel, or with a person or entity doing business in Israel or in an Israeli-controlled territory, but does not include an action made for ordinary business purposes.

50. Foreign Terrorist Organizations

Pursuant to Chapter 2252, Texas Government Code, CONTRACTOR represents and certifies that, at the time of execution of this Agreement neither CONTRACTOR, nor any wholly owned subsidiary, majority-owned subsidiary, parent company or affiliate of the same (i) engages in business with Iran, Sudan, or any foreign terrorist organization as described in Chapters 806 or 807 of the Texas Government Code, or Subchapter F of Chapter 2252 of the Texas Government Code, or (ii) is a company listed by the Texas Comptroller of Public Accounts under Sections 806.051, 807.051, or 2252.153 of the Texas Government Code. The term "foreign terrorist organization" in this paragraph has the meaning assigned to such term in Section 2252.151 of the Texas Government Code.

51. [FOR CONTRACTS $100,000 AND OVER] Firearm Entities and Trade Association Discrimination

CONTRACTOR verifies that: (1) it does not, and will not for the duration of the contract, have a practice, policy, guidance, or directive that discriminates against a firearm entity or firearm trade association or (2) the verification required by Section 2274.002 of the Texas Government Code does not apply to the contract. If circumstances relevant to this provision change during the course of the contract, Respondent shall promptly notify Agency.

52. Gender Neutral - Gender References

When necessary, unless the context clearly requires otherwise, any gender-specific or gender-neutral term in this Contract (for example, he, she, it, etc.) is to be read as referring to any other gender or to no gender.

53. [RECOMMENDED CONDITION] Payment Processing

Payment under this contract must be processed through the Texas Department of Agriculture. Receipt of payment from the Grant Recipient may take at least 45 to 60 days from the time of pay estimate approval by the project engineer

# IX

# SUPPLEMENTARY CONDITIONS OF AGREEMENT

## INDEX TO IX

## SUPPLEMENTARY CONDITIONS OF AGREEMENT


| PARAGRAPH | TITLE | PAGE SC |
|---|---|---|
| 1. | General | 1 |
| 2. | Engineer | 1 |
| 3. | Location Of Project | 1 |
| 4. | Time Allotted For Completion | 1 |
| 5. | Permits And Right-Of-Way | 1 |
| 6. | Construction In Public Streets And Private Drives | 1 |
| 7. | Maintenance Of Storm Sewer And Utility Crossings And Existing Roadways | 2 |
| 8. | Reference Specifications | 2 |
| 9. | Public Utilities And Other Property To Be Changed | 3 |
| 10. | Temporary Construction | 3 |
| 11. | Project Maintenance | 3 |
| 12. | Borings | 3 |
| 13. | Property Lines And Monuments | 3 |
| 14. | Existing Structures | 3 |
| 15. | Use Of Explosives | 3 |
| 16. | Barricades, Lights And Watchmen | 4 |
| 17. | Fences, Drainage Channels, And Crop Damage | 4 |
| 18. | Disposal Of Waste And Surplus Excavation | 4 |
| 19. | Water For Construction | 4 |
| 20. | Lights And Power | 5 |
| 21. | Wage Rate | 5 |
| 22. | Warranty Period | 5 |

23. Coordination With Others ..... 5
24. Cleanup ..... 5
25. Existing Utilities And Service Lines ..... 5
26. Testing, Inspection And Control ..... 6
27. Increased Or Decreased Quantities Of Work ..... 6
28. Poles, Signs, Guy Wires, Etc. ..... 6
29. Salvaged Materials ..... 6
30. Protection Of Improvements ..... 6
31. Protection Of Trees ..... 6
32. Protection And Adjustment Of Existing Water Valve Boxes ..... 7
33. Adjustment Of Tops Of Existing Sanitary Sewer Manholes ..... 7
34. Protection Against Accident To Employees And The Public ..... 7
35. Lines And Grades ..... 7
36. Affidavit Of Payment ..... 7
37. Certificate Of Insurance Requirements ..... 7
38. Interruption Of Utility Services ..... 8
39. Losses From Natural Causes ..... 8
40. Shop Drawings ..... 8
41. Maintenance And Instruction Manuals ..... 8
42. Project Schedule ..... 9
43. Calendar Day Defined ..... 9
44. Sanitary And Safety Facilities ..... 9
45. Subcontractor Values ..... 9
46. Project Representative Services ..... 9
47. Alternate Designs ..... 9

48. Cost Breakdown ..... 10
49. Materials And Equipment ..... 10
50. Special Provisions ..... 10
51. As-Built Dimensions ..... 10
52. Archeological Discoveries ..... 10
53. Endangered Species ..... 10
54. Use Of Facilities ..... 11
55. Operation Of Facilities ..... 11
56. Scope Of Work ..... 11
57. List Of Plans And/Or Exhibits ..... 11
58. Variations Due To Equipment ..... 12
59. Contractor's Use Of Premises ..... 12
60. Contractor's Access And Parking ..... 12

## IX

## SUPPLEMENTARY CONDITIONS OF AGREEMENT

1. GENERAL: The provisions of this section of the specifications shall govern in the event of any conflict between them and the "General Conditions."

2. ENGINEER: The word "Engineer" in these specifications shall be understood as referring to LJA Engineering, Inc., Houston, Texas, Engineer of the Owner, or such other Engineer, or persons as may be authorized by said Owner to act in any particular position.

3. LOCATION OF PROJECT: This project is located in La Marque, Texas, Galveston County. A Map showing the general location of this project is included in the Plans and/or Exhibits.

4. TIME ALLOTTED FOR COMPLETION: The time allotted for the completion of all items of work shall be consecutive calendar days, which time shall begin on the tenth (10th) day after the issuance of the Work Order (Notice to Proceed). The Work Order shall consist of a written request by the Engineer for the Contractor to proceed with the construction of the project.

5. PERMITS AND RIGHT-OF-WAY: The Owner will provide right-of-way for the purpose of construction without cost to the Contractor by securing permits in areas of public dedication or by obtaining easements across privately owned property. It shall be the responsibility of the Contractor, prior to the initiation of construction on easements through private property, to inform the property owner of his intent to begin construction. Before beginning construction in areas of public dedication, the Contractor shall inform the agency having jurisdiction in the area forty-eight (48) hours prior to initiation of the work. All permits required for construction shall be obtained by the contractor from the local governmental entity having jurisdiction.

6. CONSTRUCTION IN PUBLIC STREETS AND PRIVATE DRIVES: No public road shall be entirely closed overnight. It shall be the responsibility of the Contractor to build and maintain all weather bypasses and detours, if necessary, and to properly light, barricade, and mark all by-passes and detours that might be required on and across the streets involved in the work included in this contract. The residents shall be contacted forty-eight (48) hours prior to the time the construction will be started at their drive-ins or entrances and informed as to the length of time driveways will be closed.

   The Contractor shall make every effort to complete construction and allow immediate access to adjacent property at all driveway entrances located along the streets. Owners or tenants of improvements where access and/or entrance drives are located shall be notified at least eight (8) hours prior to the time the construction will be started at their drive-ins or entrances and informed as to the length time driveways will be closed. During wet weather the Contractor shall construct temporary gravel or shell crossings and wooden walkways to allow ingress and egress across excavated areas at no expense to the Owner and as directed by the Engineer.

The Contractor shall be responsible for all streets and entrance reconstruction and repairs and maintenance of same for a period of one year from the date of such reconstruction. In the event the repairs and maintenance are not made immediately to the satisfaction of the Engineer, and it becomes necessary for the Owner to make such repairs, the Contractor shall reimburse the Owner for the cost of such repairs.

The Contractor shall, at all times, keep a sufficient width of the roadway clear of dirt and other material to allow the free flow of traffic. The Contractor shall assume any and all responsibility for damage, personal or otherwise, that may be caused by the construction along public streets or private drives.

7. MAINTENANCE OF STORM SEWER AND UTILITY CROSSINGS AND EXISTING ROADWAYS: The Contractor shall maintain storm sewers, utilities and drainage facilities along the construction route at all time during construction at no expense to the Owner. Storm sewers and utilities crossing existing roadways shall be backfilled in accordance with the provisions of these specifications to an elevation six inches below the elevation of the existing roadway. A six-inch thick compacted limestone base shall be constructed to the elevation of the existing pavement within the limits of the pavement removal at no cost to the Owner. The existing roadway shall be maintained throughout the construction. Potholes appearing in the existing pavement which in the opinion of the Engineer are a hazard to the general public shall be filled and maintained as directed by the Engineer.

8. REFERENCE SPECIFICATIONS: Where reference is made in these specifications to specifications compiled by other agencies, organizations or departments, such reference is made for expediency and standardization from the material suppliers' point of view, and such specifications referred to are hereby made a part of these specifications.

References to a Technical Society, Organization, or Body are made in the Specifications in accordance with the following abbreviations:

| | |
|---|---|
| AASHTO | American Association of State Highway and Transportation Officials |
| ACI | American Concrete Institute |
| AIEE | American Institute of Electrical Engineers |
| AISC | American Institute of Steel Construction |
| AISI | American Iron and Steel Institute |
| ANSI | American National Standards Institute |
| API | American Petroleum Institute |
| ASTM | American Society for Testing and Materials |
| AWS | American Welding Society |
| AWWA | American Water Works Association |
| FS | Federal Specifications |
| IPCEA | Insulated Power Cable Engineers Association |
| NEC | National Electrical Code |
| NEMA | National Electrical Manufacturers Association |
| NPT | National Pipe Threads |
| PCA | Portland Cement Association |
| UL | Underwriters' Laboratories |

9. PUBLIC UTILITIES AND OTHER PROPERTY TO BE CHANGED: In case it is necessary to change or move the property of any owner or of a public utility, such property shall not be moved or interfered with until ordered to do so by the Engineer. The right is reserved to the owner of public utilities to enter upon the limits of the project for the purpose of making such changes or repairs of their property that may be made necessary by performance of this Contract.

10. TEMPORARY CONSTRUCTION: No material which has been used by the Contractor for any temporary purpose whatever is to be incorporated in the permanent structure without written consent of the Engineer.

11. PROJECT MAINTENANCE: The Contractor shall maintain and keep in good repair all work contemplated under these Plans and/or Exhibits, specifications and Plans and/or Exhibits which shall include the maintenance and repair of all existing streets, storm sewer crossings, utility crossings, temporary crossings for access to adjacent property, wooden walkways, barricades, lights, and danger signals and all work which is necessary for the well-being of the general public. In the event the Contractor fails in his obligation to properly maintain the work, the Owner shall make such repairs as are necessary and the cost of such repairs shall be deducted from payment due the Contractor.

12. BORINGS: Wherever certain test borings are made on the site, the locations of such test borings and the information revealed by them is indicated on the Plans and/or Exhibits and profiles for the project. These borings shall not be construed as a warranty on the part of the owner of the exact nature of the subsurface conditions that will be encountered during the construction of the work. The information thus furnished is intended only as a guide to the Contractor in making his own investigations preliminary to submitting a bid for the work.

13. PROPERTY LINES AND MONUMENTS: The Contractor shall protect all property corner markers and when any such markers or monuments are in danger of being disturbed, they shall be properly referenced and if disturbed, shall be reset at the expense of the Contractor.

14. EXISTING STRUCTURES: The Plans and/or Exhibits show the locations of all known surface and subsurface structures. However, the Owner assumes no responsibility for failure to show any or all of these structures on the Plans and/or Exhibits, or to show them in their exact locations. It is mutually agreed that such failure shall not be considered sufficient basis for claims for additional compensation for extra work or for increasing the pay quantities in any manner whatsoever, unless the obstruction encountered is such as to necessitate substantial changes in the lines or grades, or requires the building of special work, provisions for which are not made in the Plans and/or Exhibits and proposal, in which case the provisions in these specifications for extra work shall apply.

15. USE OF EXPLOSIVES: Use of explosives will be allowed only upon written instructions of the Engineer. Should explosives be used, the Owner shall not be held liable for damages done by the Contractor and the Contractor should notify any public service corporation, company or individual not less than eight (8) hours in advance of the use of explosives. Storage places shall be marked “DANGEROUS EXPLOSIVES.”

16. BARRICADES, LIGHTS AND WATCHMEN: Where the work is carried on in or adjacent to any street, alley or public place, the Contractor shall at his own cost and expense furnish and erect such barricades, fences, battery type flasher-markers, and danger signals, shall provide such watchmen, and shall provide such other precautionary measures for the protection of persons or property and of the work as are necessary. Barricades shall be painted in a color that will be visible at night. From sunset to sunrise the Contractor shall furnish and maintain at least one battery type flasher-marker at each barricade and sufficient number of barricades shall be erected to keep vehicles from being driven on or into any work under construction. The Contractor shall furnish watchmen in sufficient numbers to protect the work and the public.

The Contractor will be held responsible for all damage to the work due to failure of barricades, signs, lights, and watchmen to protect it, and whenever evidence is found of such damage, the Engineer may order the damaged portion immediately removed and replaced by the Contractor at his cost and expense. The Contractor's responsibility for the maintenance of barricades, signs, and lights, and for providing watchmen shall not cease until the project has been accepted by the Owner.

During the prosecution of the work, the Contractor shall obstruct public travel as little as possible and in no case shall there be less than twelve (12) feet in width of unobstructed roadway for the use of traffic. Materials and equipment stored in or near the path of traffic shall be protected with red flags during the day and with lights during the night.

17. FENCES, DRAINAGE CHANNELS, AND CROP DAMAGE: Boundary fences or other improvements removed to permit the installation of the work shall be replaced in the same location and left in a condition as good or better than that in which they were found.

Where surface drainage channels are disturbed or blocked during construction, final restoration to their original condition of grade and cross section shall be accomplished after the work of construction is completed. Interim reshaping and cleanup shall occur immediately after trench backfilling.

The Contractor shall not be held liable for unavoidable damage of crops provided such damage occurs within the construction easement provided by the Owner.

18. DISPOSAL OF WASTE AND SURPLUS EXCAVATION: All trees, stumps, slashings, brush, or other debris removed from the sites as a preliminary to the construction work shall be removed from the property and disposed of in a manner approved by the Engineer.

All excavated earth in excess of that required for backfilling shall be removed from the job site and disposed of in a satisfactory manner except in locations where, in the judgment of the Engineer, it can be neatly spread over and along the sites to form the finished contours.

19. WATER FOR CONSTRUCTION: Water used for jetting or flooding trenches, sprinkling, testing, and flushing of pipelines, or any other purpose incidental to this project, will be furnished by the Contractor. The Contractor shall make the necessary arrangements for

securing and transporting such water and shall take such water in a manner and at such times that will not produce a harmful drain or decrease of pressure in the Owner's water system. Water shall not be used in a wasteful manner.

20. LIGHTS AND POWER: The Contractor shall provide, at his own expense, electrical power, temporary lighting and facilities required for the proper prosecution and inspection of the work.

21. WAGE RATE: All employees of the Contractor on the work to be performed under this contract shall be paid the prevailing wage scale in this locality for work of a similar character in accordance with the prevailing local laws.

22. WARRANTY PERIOD: This is the period of time which encompasses the corrective actions by the Contractor for defective work, as stipulated in Article 13, Paragraph 13.07 of the General Conditions, or as set forth in Paragraph 22 of the Supplementary Conditions. The Contractor shall indemnify the Owner against any repairs which may become necessary to any part of the work performed under the contract arising from defective workmanship or materials used therein. Unless modified by special request from Owner to Contractor, in writing, the warranty period for the contract in all its parts shall be one (1) year beginning on the date on which Owner formally accepts the project. If Owner, at anytime, requests in writing to Contractor to use, take over or manage any such part of the Work, as set forth in Article 14.05 of the General Conditions, which he believes is ready for its intended use, and Contractor agrees in writing to Owner's request, then the Warranty Period for that portion of the Work, and only that portion stipulated in the request by Owner shall be one (1) year from the date of agreement by the Contractor.

23. COORDINATION WITH OTHERS: In the event other contractors are doing work in the same area simultaneously with this project, the Contractor shall coordinate his proposed construction with that of the other contractors.

24. CLEANUP: Cleanup shall follow the execution of the work. At the conclusion of the work, all tools, temporary structures and materials belonging to the Contractor shall be promptly removed and all dirt, rubbish and other foreign substances shall be disposed of.

    The Contractor shall thoroughly clean all equipment and materials installed by him and shall deliver over such materials and equipment undamaged in a bright, clean polished and new appearing condition.

    During construction of the work, the Contractor shall, at all times keep the site of the work and adjacent premises as free from material, debris, and rubbish, as is practicable and shall remove same from any portion of the site, if, in the opinion of the Engineer, such material, debris, or rubbish constitutes a nuisance or is objectionable.

    The Contractor shall remove from the site all of his surplus materials and temporary structures when no further need therefore develops.

25. EXISTING UTILITIES AND SERVICE LINES: The Contractor shall be responsible for the protection of all existing utilities or service lines crossed or exposed by his

construction operations. Where existing utilities or service lines are cut, broken, or damaged, the Contractor shall replace or repair the utilities or service lines with the same type of original material and construction, or better, at his own cost and expense, with the exception of those items included in the bid schedule.

26. TESTING, INSPECTION AND CONTROL: Testing and control of concrete and other materials used in the work shall be done by an approved local commercial laboratory employed and paid directly by the Owner or Engineer.

    Owner provides first tests and one (1) retest of materials unless otherwise specified. Subsequent tests at Contractor's expense. Notify Engineer prior to manufacture or fabrication of items so that observation may be accomplished and furnish field samples of materials to Engineer for testing.

27. INCREASED OR DECREASED QUANTITIES OF WORK: The Owner reserves the right to alter the quantities of the work to be performed or to extend or shorten the improvements at any time when and as found necessary, and the Contractor shall perform the work as altered, increased or decreased, at the contract unit prices. Such increased or decreased quantity shall be made in accordance with the General Conditions of Agreement. No allowance will be made for any change in anticipated profits nor shall such changes be considered as waiving or invalidating any condition or provisions of the contract and bond.

28. POLES, SIGNS, GUY WIRES, ETC.: All utility poles and guy wires, private signposts, signs and guy wires, and similar private obstructions which interfere with the construction of this project will be removed and replaced, or moved to new permanent locations by the owners thereof, at the Contractor's expense.

    The removal and replacement of City street signpost, and signs is the responsibility of the Contractor. The Contractor shall be responsible for all damage to street signposts and signs within the limits of his operations that remain in place or are removed and replaced. In event street signposts, and signs are injured or destroyed by the Contractor's operations, they shall be replaced by the Contractor. No separate compensation will be paid for this work, but the costs thereof shall be included in such contract pay items as are provided.

29. SALVAGED MATERIALS: All materials removed during the construction of the project, and designated on the Plans and/or Exhibits, or by the Engineer, as salvaged materials, shall be removed, cleaned and stored as directed by the Engineer. Salvaged materials shall be the property of the Owner.

30. PROTECTION OF IMPROVEMENTS: The Contractor shall be entirely responsible for the protection of all improvements that are not designated by the Engineer to be removed for proper construction of the project; this shall include sidewalks, buildings walls, existing inlets and manholes, underground utilities, shrubs, trees, signs, sod, and pavement.

31. PROTECTION OF TREES: No trees shall be removed or cut except upon the specific authority of the Engineer. Trees adjacent to the work shall be protected from all damage by the construction operations.

32. PROTECTION AND ADJUSTMENT OF EXISTING WATER VALVE BOXES: Water valve locations will be furnished by the owner prior to grading operations. Protection of existing water valve boxes located within the limits of the work shall subsequently be the responsibility of the Contractor. Failure to show water valve box locations on the Plans and/or Exhibits does not relieve the Contractor of the responsibility to prevent damage to the valves and boxes. The Contractor shall adjust all water valve boxes which require adjustment to the new pavement grade.

33. ADJUSTMENT OF TOPS OF EXISTING SANITARY SEWER MANHOLES: Tops of existing sanitary sewer manholes will be adjusted where necessary to match grade of new pavement. Adjustment will be made by breaking back the top portion of the manhole and rebuilding to conform to the new grade.

34. PROTECTION AGAINST ACCIDENT TO EMPLOYEES AND THE PUBLIC: The Contractor and his Sureties shall indemnify and save harmless the Owner and Engineer, and all their officers, agents, and employees from all suits, actions, and claims of any character, name and description brought for or on account of any injuries or damages received or sustained by any person or persons or property, on account of any negligent act or fault of Contractor, his agents or employees, in the execution of said contract; or on account of the failure of the Contractor to provide necessary barricades, warning lights or signs; and will be required to pay any judgment, with costs, which may be obtained against the Owner and/or Engineer growing out of such injury or damage.

35. LINES AND GRADES: The Engineer will furnish survey control to enable the Contractor to set construction stakes for the work. The furnishing of the control does not relieve the Contractor of the responsibility of insuring that the work is constructed to the lines and grades shown on the Plans and/or Exhibits. The Contractor shall be responsible for construction staking. Any field conditions that appear to be in conflict with the Plans and/or Exhibits, shall be submitted to the Engineer in writing and adequate time allowed the Engineer to resolve the conflict. No compensation for surveying will be made without prior written approval from the Owner and the Engineer.

36. AFFIDAVIT OF PAYMENT: Each request for payment must be accompanied by an Affidavit of Payment duly signed and attested (if Corporation) stating that all cost of labor, material, equipment, taxes, etc., pertinent to this project, have been paid and are current.

37. CERTIFICATE OF INSURANCE REQUIREMENTS: Each and every Contractor performing work at the site of the Project shall not commence work until he has obtained all the Insurance required under this paragraph nor shall the Contractor allow any subcontractor to commence work on his subcontract until all similar insurance required of the subcontractor has been so obtained. Each and every contractor and subcontractor shall take out and maintain during the life of his contract adequate worker's compensation insurance as shall protect him and any subcontractor's performing any work covered by the contract from any claims for damages for personal injury, including wrongful death, as well as from claims for property damages which may arise from operations under the contract, or in any way connected therewith. The minimum amounts of such insurance shall be as follows:

Workers' Compensation: See Section VII-A for applicable amounts for coverage.

Public Liability: $500,000.00 for injuries to one person. $1,000,000.00 for one accident.

Property Damage: $500,000.00

Automobile Property Damage: $500,000.00

Automobile Public Liability: $500,000.00 for injury to one person. $1,000,000.00 per one accident.

NOTE: Automobile insurance shall cover all automobiles and trucks owned by the Contractor.

Proper certificates of insurance shall be filed with the Engineer prior to the execution of the Contract. Contractor's insurance as set forth in Article 5, Paragraph 5.04 of the General Conditions, and as outlined above shall remain in full force until the date on which the Owner formally accepts the project.

38. INTERRUPTION OF UTILITY SERVICES: Operate no valve or other control on existing systems. Exercise care in performing work so as not to interrupt service. Locate and uncover existing utilities ahead of heavy excavation equipment. At house connections, either lift trenching machine over lines or cut and reconnect with minimum interruption of service as approved.

39. LOSSES FROM NATURAL CAUSES: Unless otherwise specified, all loss or damage to the Contractor arising out of the nature of the work to be done, or from the action of the elements, or from any unforeseen circumstance in the prosecution of the same, or from unusual obstructions or difficulties which may be encountered in the prosecution of the work, shall be sustained and borne by the Contractor at his own cost and expense.

40. SHOP DRAWINGS: Six copies of shop drawings shall be submitted for approval a minimum of two weeks prior to the anticipated construction of the item. The submittal data shall be accompanied by written certification that the Contractor has reviewed and recommends the submitted data are consistent with the Plans and/or Exhibits and specifications. Required shop drawing submittals include but are not limited to all mechanical equipment and material, electrical equipment and material, building materials, fabricated metal and piping, controls and coatings. Color chips shall be submitted with coating submittal for selection of color coating. Operation and Maintenance manuals for all items of equipment or materials shall be submitted prior to the project being 50% complete.

41. MAINTENANCE AND INSTRUCTION MANUALS: Furnish three (3) bound sets of Maintenance and Instruction Manuals. Bind manuals in volumes of not more than 4 inches thick, in hard back 9 inch by 12 inch binders. Include like equipment in one volume with heavy duty dividers, separating equipment. Catalog and index volumes. Operation and Maintenance Manuals or Bulletins shall include necessary data for reordering replacement parts, lubrication schedules, and procedures for required maintenance. These items shall be included but not limited to: exhaust fans, air conditioning units, louvers, generator sets, pumps, motors, variable speed drives,

mechanical drives, electrical switchgear and controls, electrical fixtures, valves, instrumentation, chlorinators, meters, gauges, and miscellaneous mechanical and electrical components supplied under this contract.

42. PROJECT SCHEDULE: Within 15 days after execution of Contract, submit in acceptable form, anticipated progress schedule covering work to be performed. The project schedule shall indicate the number of crews, items to be constructed, and the time schedule anticipated for each item.

43. CALENDAR DAY DEFINED: This project is a calendar day contract. The time of completion shall be measured by calendar days. A calendar day shall be any day Sunday through Saturday in which the working site is suitable for construction for four hours of the day from 8:00 a.m. to 5:00 p.m. Upon request by the Contractor, extensions of time may be issued by the Engineer and Owner if, in their opinion, work is prohibited through no fault of the Contractor.

44. SANITARY AND SAFETY FACILITIES: The Contractor shall be responsible for all sanitary and safety facilities necessary for the Project, including rest rooms, drinking facilities, wash areas, hardhats, trench shoring, etc.

45. SUBCONTRACTOR VALUES: The Contractor shall not employ subcontractors whose aggregate value of work to be performed exceeds fifty percent (50%) of the total amount bid.

46. PROJECT REPRESENTATIVE SERVICES: Project representative services will be the responsibility of the Engineer and these services shall be in accordance with the Engineering Services Contract between the Owner and the Engineer. Project representative duties shall include preparation of daily reports, determination that the project is proceeding in the general compliance with the Contract Documents, measurement of material quantities, and reporting to the Engineer any work that should be stopped when it appears that the completed project may not comply with the requirements of the Contract Documents. The Project Representative shall be the liaison between the Contractor and the Engineer. The Project Representative responsibilities begin after the contract is awarded and terminate after the final inspection.

47. ALTERNATE DESIGNS: If alternate design features are proposed for convenience of Contractor, submit design calculations and detail Plans and/or Exhibits covering proposed changes and related modifications of Contract Plans and/or Exhibits to Engineer for review. Make Plans and/or Exhibits same size as Contract Plans and/or Exhibits and of comparable quality. The Contractor shall make payment to the Owner for all charges resulting from modifications, including engineering charges for checking such designs.

    If substitute items of equipment are authorized which vary materially from those shown on Plans and/or Exhibits, prepare equipment data and detailed Plans and/or Exhibits covering necessary modifications and submit to Engineer for approval. Make Plans and/or Exhibits same size as Contract Plans and/or Exhibits and of comparable quality. The Contractor shall make payment to the Owner for all charges resulting from modifications, including engineering charges for checking modifications.

48. COST BREAKDOWN: Within 15 days after execution of Contract, submit, in acceptable form, schedule showing subdivision of Contract into various items of permanent construction, stating quantities and prices, as basis for computing value to Owner of permanent usable parts of facility to be paid for on monthly estimates. No payment will be made to Contract until such schedule has been submitted and approved.

49. MATERIALS AND EQUIPMENT: Incorporate into work only new materials and equipment of domestic manufacture unless otherwise designated. Store these materials and equipment in manner to protect them from damages. Manner of protection subject to specific approval of Engineer. Pipe, fittings, equipment, and other serviceable materials found on site of work, or dismantled by reason of construction, remain property of Owner. Remove and deliver materials to Owner at designated points. Pay, at prevailing market price, for usable materials that are damaged through negligence.

50. SPECIAL PROVISIONS: Basic Technical Specification Items, which follow describe general requirements. When necessary, Special Provisions are inserted, to describe additional requirements appreciable to this Contract. Special Provisions are to be used in conjunction with basic Technical Specification Items. In event of conflict between requirements of the Special Provisions and the basic Technical Specification Items, the requirements as set forth in the Special Provision will govern. In the event of conflict between the requirements shown on the Plans and/or Exhibits and those contained in the specifications, the Plans and/or Exhibits shall govern subject to interpretation by the Engineer. See also “General Conditions” Article 3.

51. AS-BUILT DIMENSIONS: Contractor to make daily measurements of facilities. On completion of job, Contractor to furnish Owner with one set of bluelines, marked with red pencil, to show as-built dimensions and location of all work constructed.

52. ARCHEOLOGICAL DISCOVERIES: No activity which may affect a State Archeological Landmark is authorized until the Owner has complied with the provisions of the Antiquities Code of Texas. The Owner has previously coordinated with the appropriate agencies and impacts to known cultural or archeological deposits have been avoided or mitigated. However, the Contractor may encounter unanticipated cultural or archeological deposits during construction.

    If archeological sites or historic structures are discovered after construction operations are begun, the Contractor shall immediately cease operations in that particular area and notify the Owner and the Texas Historical Commission at 512-463-6096. The Contractor shall take reasonable steps to protect and preserve the discoveries until they have been inspected by the Owner’s representative and the appropriate State Agency. The Owner will promptly coordinate with the Texas Historical Commission and any other appropriate agencies to obtain any necessary approvals or permits to enable the work to continue. The Contractor shall not resume work in the area of the discovery until authorized to do so by the Owner.

53. ENDANGERED SPECIES: No activity is authorized that is likely to jeopardize the continued existence of a threatened or endangered species as listed or proposed for listing under the Federal Endangered Species Act (ESA), and/or the State of Texas Parks and Wildlife Code on Endangered Species, or to destroy or adversely modify the

habitat of such species. If a threatened or endangered species is encountered during construction, the Contractor shall immediately cease work in the area of the encounter and notify the applicable State Agency. These actions shall include reporting the encounter to the U.S. Fish and Wildlife Service, and the Texas Parks and Wildlife Department, obtaining any necessary approvals or permits to enable the work to continue, or implement other mitigative actions. The Contractor shall not resume construction in the area of the encounter until authorized to do so by the Owner.

54. USE OF FACILITIES: As work progresses, completed components may be placed in service by the Owner. Such usage by the Owner shall not be held in any way as acceptance of said work or any part thereof or as a waiver of the provisions of The Contract or the Specifications.

55. OPERATION OF FACILITIES: Contractor is not to operate, tap, or tamper with any existing facilities. Where construction involves the operation of any existing facilities, Owner to perform such operation. Any connection to existing equipment or systems to be scheduled and approved in advance with performance to occur within the presence of the Engineer.

56. SCOPE OF WORK:

A. Under this Contract, the Contractor shall furnish all materials, appliances, tools, equipment, transportation, services, and all labor and superintendence necessary for construction of the work as described in these Specifications and as shown on the Plans and/or Exhibits. The completed installation shall not lack any part which can be reasonably implied as necessary to its proper functioning nor any subsidiary item which is customarily furnished, and the Contractor shall deliver the completed and operating installation to the Owner.

B. Work in general under this Contract includes, but is not limited to, the following:

Demolition of driveways to remove existing culverts and inlets, filling of existing ditches, and installation of new storm sewer and inlets along the street.

57. LIST OF PLANS:

| Sheet | Title |
|---|---|
| 1 | Cover Sheet |
| 2 | General Notes – Location & Vicinity Maps |
| 3 | Project Layout – Horizontal & Vertical Controls |
| 4 | Wisteria Drive – Plan & Profile – Beginning to BL “A” STA. 5+00 |
| 5 | Wisteria Drive – Plan & Profile – BL “A” STA. 5+00 to End |
| 6 | Pavement Details |
| 7 | Storm Sewer Details – Sheet 1 of 2 |
| 8 | Storm Sewer Details – Sheet 2 of 2 |
| 9 | Water Details |
| 10 | Storm Water Pollution Prevention – Plan & Details |
| 11 | Traffic Control Plan – Rolling Construction |
| 12 | Standard Barricade Details |

58. VARIATIONS DUE TO EQUIPMENT: Foundations, structural supports, electrical work, and piping shown on Plans and/or Exhibits for items of equipment may be changed if necessary to accommodate equipment furnished. Every effort has been made to design foundations, structural supports, electrical work, and piping so that no changes will be necessary; however, exact dimensions and size of subject foundations and structural supports and exact electrical and piping installations cannot be finally determined until various items of equipment are purchased and manufacturer's certified shop drawings are secured. Make required changes, after prior consultation with Engineer, at no cost to Owner.

59. CONTRACTOR'S USE OF PREMISES: Contractor may use the staging area designated by the Plans and/or Exhibits for storage and temporary stockpile area. Contractor may fence the staging area. All materials stored within the Contractor's storage area, either on-site or off-site, shall be available for inspection by the Engineer or Owner's representative.

At the completion of the work, Contractor shall remove all soil which may have become contaminated by any spills such as oil from equipment in the storage area or due to stockpiling. Contractor shall plow premises to a depth of at least 12 inches and shall finish grade areas, filling in ruts and depressions made during use of the premises. The surface of the premises shall be returned to its original condition by the establishment of turf, etc.

60. CONTRACTOR'S ACCESS AND PARKING: The Contractor shall be expected to comply with the Owner's rules and regulations for vehicle circulation and parking. Adequate safety precautions must be provided. The Owner will designate area for parking of Contractor's employee vehicles. Owner will provide the Contractor with an appropriate access plan for construction equipment, supplies, materials, etc.

# X

# SECTION 3 POLICY

# Section 3 Policy Issuance for Construction Contracts

**Federal Revisions for Section 3 Requirements – TDA Policy Issuance CDBG 20-01**
**Effective Date: July 1, 2021**

## Applicability:

Section 3 of the Housing and Urban Development Act of 1968 requires that, to the greatest extent feasible, economic opportunity generated by CDBG funds and other HUD assistance, most importantly employment, is directed to low- and very low-income persons, particularly those who are recipients of government assistance for housing, as well as residents of the community in which the federal funds are spent.

- The requirements apply to the entire project that is funded with Section 3 covered financial assistance, regardless of whether the Section 3 project is fully- or partially-funded with CDBG assistance.
- All construction and administrative services contracts must comply with the requirements below.
- Section 3 goals and data reporting requirements generally do not apply to contracts for materials, planning, and professional services. Professional services include non-construction services that require an advanced degree or professional licensing (e.g., engineering, architecture, land surveying, accounting).

## Construction Contractor Compliance Overview:

Please note that Federal rules do not require Grant Recipients to contract or subcontract with a Section 3 business concern, nor do the rules require hiring of Section 3 workers. However, Grant Recipients must be able to demonstrate that, where possible, contracting, employment, and training opportunities were made available to workers and businesses meeting Section 3 designation criteria.

Under the revised Section 3 Policy, Construction Contractors are required to complete the following. Please return all completed forms to your GrantWorks Project Manager or Labor Standards Specialist.

- ☐ Include required contract clauses in all construction contracts and subcontracts. See **Required Contract Clause- Section 3 Compliance Terms and Conditions**
- ☐ Complete the **Certification of Bidder Regarding Civil Rights Laws and Regulations**
- ☐ Demonstrate outreach efforts to recruit Section 3 residents for employment. See **Section 3 Requirements for Outreach and Reporting**
- ☐ Confirm the Section 3 Status of your business by doing ONE of the following:
  - Completing **Form A1023 Certification as Section 3 Business Concern**
  - Providing documentation (e.g. screenshot, print out) of your business' inclusion on any list or database published by HUD reporting Section 3 Status, such as HUD's Section 3 Business Registry - https://portalapps.hud.gov/Sec3BusReg/BRegistry/BRegistryHome
- ☐ Confirm the Section 3 Status of all employees by doing ONE of the following:
  - Complete **Form A1022- Employer Certification Form for Section 3** listing all employees and their Section 3 Status (to be completed by prime contractor) -OR-
  - Have each employee complete **Form GW1022- Employee Self-Certification Form for Section 3** and submit that form with their first payroll

## Section 3 Definitions:

Section 3 is a provision of the Housing and Urban Development Act of 1968 for the purpose of ensuring that employment and other economic opportunities generated by certain HUD financial assistance shall, **to the greatest extent feasible**, be directed to low- and very low-income persons, particularly those who are recipients of government assistance for housing, and to business concerns which provide economic opportunities to low- and very low-income persons.

Section 3 status may be applied to individuals designated by HUD as either ***SECTION 3 WORKERS*** or ***TARGETED SECTION 3 WORKERS*** and to businesses identified as ***SECTION 3 BUSINESS CONCERNS***:

**Section 3 Worker:**
A Section 3 Worker is any worker who currently fits, or when hired within the past five years fit, at least one (1) of the following categories, as documented:

1. The worker's income for the previous or annualized calendar year is below the income limit established by HUD
2. The worker is employed by a Section 3 business concern; or
3. The worker is a YouthBuild participant

**Targeted Section 3 Worker:**
A Targeted Section 3 Worker for Housing and Community Development Financial Assistance Projects is a Section 3 Worker who:

1. Is employed by a Section 3 Business Concern; or
2. Currently fits or when hired fit at least one of the following categories, as documented within the past five (5) years:
    a. Living within the service are or the neighborhood of the project; or
    b. A YouthBuild participant

Residents based outside the project Service Area **DO NOT** qualify as Targeted Section 3 Workers. See attached Project Service Area Map for exact boundaries.

**Section 3 Business Concern:**
A Section 3 Business Concern is a business that meets at least one of the following criteria, documented within the last six (6) month period:

1) At least 51% owned and controlled by low- or very low-income persons;
2) Over 75% of the labor hours performed for the business over the prior three-month period are performed by Section 3 workers; or
3) A business at least 50% owned and controlled by current public housing residents or residents who currently live in Section 8-assisted housing.

**Reporting of labor hours for Section 3 Compliance will be determined by employee hours on Payroll Reports. The Section 3 status of each employee must be documented on the following forms and submitted to the GrantWorks Labor Standards Specialist within 30 days of construction completion.**

# Section 3 Requirements for Outreach and Reporting

Contractors are required to access the following resources to identify potential Section 3 employees IF any new employees are needed, OR if vacancies exist for work on the project:

- Texas Workforce Solutions - https://www.workintexas.com; or
- Local Workforce Solutions Office (WIOA One Stop Shop), if applicable - https://www.twc.texas.gov/directory-workforce-solutions-offices-services

Job vacancies posted at https://www.workintexas.com should include the notation **Sec3** in the job title and job description. Instructions are attached. A copy of the posting must be provided for the project file.

While contractors are not required to employ Section 3 Workers, they must demonstrate an effort to identify potential employees as appropriate, including documentation for any applicants that are Section 3 Workers.

Similarly, all outreach efforts and attempts to comply with Section 3 guidelines, as well as any impediments encountered despite the efforts undertaken, as applicable.

**Documentation of outreach efforts must be maintained and submitted to the GrantWorks Project Manager or Labor Standards Specialist.**

# X-A

# STATEMENT OF BIDDER'S QUALIFICATIONS

# Statement of Bidder's Qualifications

*Adapted from TDA July 2022 Appendix F: Sample Construction Bid Packet*

**This statement must be notarized.** All questions must be answered, and the data given must be clear and comprehensive. If necessary, questions may be answered on separate attached sheets. The Bidder may submit any additional information it desires.

Date: _____

Bidder (Legal Name of Firm): _____

Date Organized: _____

Name of Owner(s): _____

Address: _____

Date Incorporated: _____

Federal ID Number: _____

Number of Years in contracting business under present name _____

List all other names under which your business has operated in the last 10 years:

_____

_____

_____

**Work Presently Under Contract:**

| Contract | $ Amount | Completion Date |
|---|---|---|
| | | |
| | | |
| | | |
| | | |
| | | |
| | | |

*Attach additional sheets if necessary*

Type of work performed by your company: _____

Total Staff employed by Firm (Include breakdown by Managers and Trades on separate sheet):

_____

Have you ever failed to complete any work awarded to you? *(If yes, please attach summary on a separate sheet. Include brief explanation of cause and resolution)*
☐ Yes ☐ No

Have you ever defaulted on a contract? *(If yes, please attach summary of details on a separate sheet.)*
☐ Yes ☐ No

Has your organization had any disbarments or suspensions that have been imposed in the past five years or that was still in effect during the five-year period or is still in effect? *(If yes, list and explain; such list must include disbarments and suspensions of officers, principals, partners, members, and employees of your organization.)*
☐ Yes ☐ No

**List the projects most recently completed by your firm (include project of similar importance):**

| **Project** | **$ Amount** | **Month/Year Completed** |
|---|---|---|
| | | |
| | | |
| | | |
| | | |
| | | |
| | | |

*Attach additional sheets if necessary*

**Major equipment available for this contract:**

---

Are you in compliance with all applicable EEO requirements? *(If no, please attach details on separate sheet.)*
☐ Yes ☐ No

(Optional) Minority Business Reporting Information:
Owner's Race: _____
Owner's Ethnicity: _____
Owner's Gender: _____

Are you a Section 3 business? ☐ Yes ☐ No

*Section 3 Business Concerns:*

a) *Businesses that are 51 percent or more owned by Section 3 residents;*
b) *Businesses whose permanent, full-time employees include persons, at least 30 percent of whom are currently Section 3 residents, or within three years of the date of first employment with the firm were Section 3 residents;*
c) *Businesses that provide evidence of a commitment to subcontract in excess of 25 percent of the dollar amount of all subcontracts to be awarded to businesses that meet the qualifications described above; or*
d) *Businesses located within the Grant Recipient's jurisdiction that identifies themselves as Section 3 Business Concerns because they provide economic opportunities for low- and very low-income persons.*

**Bank References**

Address: _____ Contact Name: _____

City & State: _____ Zip: _____Phone Number: _____

Credit available: $ _____

Has the firm or predecessor firm been involved in a bankruptcy or reorganization? *(If yes, please attach summary of details on a separate sheet.)*

☐ Yes ☐ No

**Additional Attachments**

List on a sheet attached hereto all judgements, claims, arbitration proceedings, or suits pending or outstanding against bidder over the last five (5) years with amount of claim and brief description.

List on a sheet attached hereto all lawsuits or requested arbitration with regard to construction contracts which bidder has initiated within the last five (5) years and brief explanation of claim and outcome.

Attach resume(s) for the principal member(s) of your organization, including the officers as well as the proposed superintendent for the project.

Signed this _____ day of _____, 20____.

_____ _____

Signature Printed Name and Title

_____

Company Name

*Notary Statement:*

*_____. being duly sworn, says that he/she is the _____Position/Title _____of_____ (Firm Name), and hereby swears that the answers to the foregoing questions and all statements therein contained are true and correct. He/she hereby authorizes and requests any person, firm, or corporation to furnish any information requested City/County of _____ in verification of the recitals comprising this Statement of Bidder's Qualifications.*

*Subscribed and sworn before me this _____day of _____, 20____.*

_____ _____

*Signature of Notary Public* *Printed Name*

*My Commission Expires: _____,*

*The penalty for making false statements is prescribed in the U. S. Criminal Code, 18 U.S.C. 1001.*

# X-B

# NON-COLLUSION AFFIDAVIT OF PRIME BIDDER

# NON-COLLUSION AFFIDAVIT OF PRIME BIDDER

*Updated from TDA July 2022 Appendix F: Sample Construction Bid Packet*

State of Texas )

County of _____)

_____, being first duly sworn, deposes and says that:

(1) He/She is _____ of _____, the Bidder that has submitted the attached Bid;

(2) He/She is fully informed respecting the preparation and contents of the attached Bid and of all pertinent circumstances respecting such Bid;

(3) Such Bid is genuine and is not a collusive or sham Bid;

(4) Neither the said Bidder nor any of its officers, partners, owners, agents, representatives, employees or parties in interest, including this affiant, has in any way colluded, conspired, connived or agreed, directly or indirectly with another Bidder, firm or person to submit a collusive or sham Bid in connection with the Contract for which the attached Bid has been submitted or to refrain from bidding in connection with such Contract, or has in any manner, directly or indirectly, sought by agreement or collusion or communication or conference with any other Bidder, firm or person to fix the price or prices in the attached Bid or of any other Bidder, or to fix an overhead, profit or cost element of the Bid price or the Bid price of any other Bidder, or to secure through any collusion, conspiracy, connivance or unlawful agreement any advantage against the _____ (Local Public Agency) or any person interested in the proposed Contract; and

(5) The price or prices quoted in the attached Bid are fair and proper and are not tainted by any collusion, conspiracy, connivance or unlawful agreement on the part of the Bidder or any of its agents, representatives, owners, employees, or parties in interest, including this affiant.

(Signed) _____

_____
Title

Subscribed and sworn to me this _____ day of _____.

By: _____
Notary Public

My commission expires _____

# X-C

# CERTIFICATION OF BIDDER REGARDING CIVIL RIGHTS LAWS AND REGULATIONS

U.S. Department of Housing and Urban Development-

# Certification of Bidder Regarding Civil Rights Laws and Regulations

*Updated from TDA July 2022 Appendix F: Sample Construction Bid Packet*

| |
|---|
| U.S. Department of Housing and Urban Development<br>**CERTIFICATION OF BIDDER REGARDING CIVIL RIGHTS LAWS AND REGULATIONS** |
| INSTRUCTIONS |
| CERTIFICATION OF BIDDER REGARDING Executive Order 11246 and Federal Laws Requiring Federal Contractor to adopt and abide by equal employment opportunity and affirmative action in their hiring, firing, and promotion practices. This includes practices related to race, color, gender, religion, national origin, disability, and veterans' rights. |
| NAME AND ADDRESS OF BIDDER (include ZIP Code) |
| CERTIFICATION BY BIDDER |
| Bidder has participated in a previous contract or subcontract subject to Civil Rights Laws and Regulations.<br>☐ Yes ☐ No |
| The undersigned hereby certifies that:<br>☐ The Provision of Local Training, Employment, and Business Opportunities clause (Section 3 provision) is included in the Contract.<br>☐ The Equal Opportunity clause is included in the Contract (if bid equals or exceeds $10,000). |
| Have you ever been or are you being considered for sanction due to violation of Executive Order 11246, as amended?<br>☐ Yes ☐ No |
| |
| NAME AND TITLE OF SIGNER (Please type) |
| SIGNATURE DATE |

# X-D

# CERTIFICATION REGARDING LOBBYING

# Certification Regarding Lobbying

*Updated from TDA July 2022 Appendix F: Sample Construction Bid Packet*
(To be submitted with each bid or offer exceeding $100,000)

The undersigned certifies, to the best of his or her knowledge and belief, that:
(a) No Federal appropriated funds have been paid or will be paid, by or on behalf of the undersigned, to any person for influencing or attempting to influence an officer or employee of an agency, a Member of Congress, an officer or employee of Congress, or an employee of a Member of Congress in connection with the awarding of any Federal contract, the making of any Federal grant, the making of any Federal loan, the entering into of any cooperative agreement, and the extension, continuation, renewal, amendment, or modification of any Federal contract, grant, loan, or cooperative agreement.

(b) If any funds other than Federal appropriated funds have been paid or will be paid to any person for influencing or attempting to influence an officer or employee of any agency, a Member of Congress, an officer or employee of Congress, or an employee of a Member of Congress in connection with this Federal contract, grant, loan, or cooperative agreement, the undersigned shall complete and submit Standard Form-LLL, "Disclosure Form to Report Lobbying," in accordance with its instructions.

(c) The undersigned shall require that the language paragraph 1 and 2 of this anti-lobbying certification be included in the award documents for all subawards at all tiers (including subcontracts, subgrants, and contracts under grants, loans, and cooperative agreements) and that all subrecipients shall certify and disclose accordingly.

This certification is a material representation of fact upon which reliance was placed when this transaction was made or entered into. Submission of this certification is a prerequisite for making or entering into this transaction imposed by 31, U.S.C. § 1352 (as amended by the Lobbying Disclosure Act of 1995).

The Contractor, _____, certifies or affirms the truthfulness and accuracy of each statement of its certification and disclosure, if any. In addition, the Contractor understands and agrees that the provisions of 31 U.S.C. § 3801 et seq., apply to this certification and disclosure, if any.

_____
Signature of Contractor's Authorized Official

_____
Printed Name and Title of Contractor's Authorized Official

_____
Date

# X-E

# DISCLOSURE OF LOBBYING ACTIVITES AND INSTRUCTIONS

# Disclosure of Lobbying Activities

*Instructions For Completion of SF-LLL, Disclosure of Lobbying Activities*

This disclosure form shall be completed by the reporting entity, whether subawardee or prime Federal recipient, at the initiation or receipt of a covered Federal action, or a material change to a previous filing, pursuant to title 31 U.S.C. section 1352. The filing of a form is required for each payment or agreement to make payment to any lobbying entity for influencing or attempting to influence an officer or employee of any agency, a Member of Congress, an officer or employee of Congress, or an employee of a Member of Congress in connection with a covered Federal action. Complete all items that apply for both the initial filing and material change report. Refer to the implementing guidance published by the Office of Management and Budget for additional information.

1) Identify the type of covered Federal action for which lobbying activity is and/or has been secured to influence the outcome of a covered Federal action.

2) Identify the status of the covered Federal action.

3) Identify the appropriate classification of this report. If this is a followup report caused by a material change to the information previously reported, enter the year and quarter in which the change occurred. Enter the date of the last previously submitted report by this reporting entity for this covered Federal action.

4) Enter the full name, address, city, State and zip code of the reporting entity. Include Congressional District, if known. Check the appropriate classification of the reporting entity that designates if it is, or expects to be, a prime or subaward recipient. Identify the tier of the subawardee, e.g., the first subawardee of the prime is the 1st tier. Subawards include but are not limited to subcontracts, subgrants and contract awards under grants.

5) If the organization filing the report in item 4 checks “Subawardee,” then enter the full name, address, city, State and zip code of the prime Federal recipient. Include Congressional District, if known.

6) Enter the name of the federal agency making the award or loan commitment. Include at least one organizational level below agency name, if known. For example, Department of Transportation, United States Coast Guard.

7) Enter the Federal program name or description for the covered Federal action (item 1). If known, enter the full Catalog of Federal Domestic Assistance (CFDA) number for grants, cooperative agreements, loans, and loan commitments.

8) Enter the most appropriate Federal identifying number available for the Federal action identified in item 1 (e.g., Request for Proposal (RFP) number; Invitations for Bid (IFB) number; grant announcement number; the contract, grant, or loan award number; the application/proposal control number assigned by the Federal agency). Included prefixes, e.g., "RFP-DE-90-001."

9) For a covered Federal action where there has been an award or loan commitment by the Federal agency, enter the Federal amount of the award/loan commitment for the prime entity identified in item 4 or 5.

10) Enter the full name, address, city, State and zip code of the lobbying registrant under the Lobbying Disclosure Act of 1995 engaged by the reporting entity identified in item 4 to influence the covered Federal action. (b) Enter the full names of the individual(s) performing services, and include full address if different from 10(a). Enter Last Name, First Name, and Middle Initial (MI).

11) The certifying official shall sign and date the form, print his/her name, title, and telephone number.

According to the Paperwork Reduction Act, as amended, no persons are required to respond to a collection of information unless it displays a valid OMB control Number. The valid OMB control number for this information collection is OMB No. 0348-0046. Public reporting burden for this collection of information is estimated to average 10 minutes per response, including time for reviewing instructions, searching existing data sources, gathering and maintaining the data needed, and completing and reviewing the collection of information. Send comments regarding the burden estimate or any other aspect of this collection of information, including suggestions for reducing this burden, to the Office of Management and Budget, Paperwork Reduction Project (0348-0046), Washington, DC 20503

Approved by OMB 0348-0046

# Disclosure of Lobbying Activities

Complete this form to disclose lobbying activities pursuant to 31 U.S.C. 1352 (See reverse for public burden disclosure)

| | | |
|---|---|---|
| 1. Type of Federal Action:<br>a. contract<br>____ b. grant<br>c.cooperative agreement<br>d. loan<br>e. loan guarantee<br>f. loan insurance | 2. Status of Federal Action:<br>a. bid/offer/application<br>_____ b. initial award<br>c. post-award | 3. Report Type:<br>a. initial filing<br>_____ b. material change<br><br>For material change only:<br>Year _____ quarter _____<br>Date of last report_____ |

| | |
|---|---|
| 4. Name and Address of Reporting Entity:<br>____ Prime _____ Subawardee<br>Tier_____, if Known:<br><br>Congressional District*, if known*: | 5. If Reporting Entity in No. 4 is Subawardee,<br>Enter Name and Address of Prime:<br><br>Congressional District*, if known*: |
| 6. Federal Department/Agency: | 7. Federal Program Name/Description:<br><br>CFDA Number, *if applicable*: _____ |
| *8.* Federal Action Number, *if known:* | 9. **Award Amount**, *if known:*<br>$ |
| 10. a. Name and Address of Lobbying Registrant<br>(if individual, last name, first name, MI): | **b. Individuals Performing Services** (including address if different from No. 10a)<br>(last name, first name, MI): |
| 11. Information requested through this form is authorized by title 31 U.S.C. section 1352. This disclosure of lobbying activities is a material representation of fact upon which reliance was placed by the tier above when this transaction was made or entered into. This disclosure is required pursuant to 31 U.S.C. 1352. This information will be reported to the Congress semi-annually and will be available for public inspection. Any person who fails to file the required disclosure shall be subject to a civil penalty of not less than $10,000 and not more than $100,000 for each such failure. | Signature: _____<br><br>Print Name: _____<br><br>Title: _____<br><br>Telephone No.: _____ Date: _____ |
| Federal Use Only | Authorized for Local Reproduction<br>Standard Form - LLL (Rev. 7-97) |

# X-F

# MINORITY/ FEMALE GOALS AND TIMETABLES

# MINORITY/FEMALE GOALS AND TIMETABLES

**The female employment goal is effective as of April 1980 and is currently 6.9%. The percentages for minority participation in Texas are:**

| | |
|---|---|
| Texarkana Area: | |
| Texarkana & Bowie Co. | 19.7 |
| Non-MSA Counties of Camp, Cass, Lamar, Morris, Red River & Titus | 20.2 |
| | |
| Tyler-Longview Area: | |
| Longview, Gregg Co. & Harrison Co. | 22.8 |
| Tyler & Smith Co. | 23.5 |
| Non-MSA Counties of Anderson, Angelina, Cherokee, Henderson, Marion, Nacogdoches, Panola, Rusk, San Augustine, Shelby, Upshur & Wood | 22.5 |
| | |
| Beaumont-Port Arthur Area: | |
| Beaumont, Port Arthur, Orange, Hardin Co., Jefferson Co., & Orange Co. | 22.6 |
| Non-MSA Counties of Jasper, Houston, Newton, Sabine, & Tyler | 22.6 |
| | |
| Houston Area: | |
| Bryan, College Station & Brazos Co. | 23.7 |
| Galveston, Texas City & Galveston Co. | 28.9 |
| Houston, Brazoria Co., Fort Bend Co., Harris Co., Liberty Co., Montgomery Co. & Waller Co. | 27.3 |
| Non-MSA Counties of Austin, Burleson, Calhoun, Chambers, Colorado, DeWitt, Fayette, Goliad, Grimes, Jackson, Lavaca, Leon, Madison, Matagorda, Polk, Robertson, San Jacinto, Trinity, Victoria, Walker, Washington, & Wharton | 27.4 |
| | |
| Austin Area: | |
| Austin, Hays Co., Travis Co., & Williamson Co. | 24.1 |
| Non-MSA Counties of Bastrop, Blanco, Burnet, Caldwell, Lee & Llano | 24.2 |
| | |
| Waco, Killeen, Temple Area: | |
| Killeen, Temple, Bell Co. & Coryell Co. | 16.4 |
| Waco & McLennan Co. | 20.7 |
| Non-MSA Counties of Bosque, Falls, Freestone, Hamilton, Hill, Lampasas, Limestone, Milam & Mills | 18.6 |
| | |
| Dallas, Fort Worth Area: | |
| Dallas, Fort Worth, Collin Co., Dallas Co., Denton Co., Ellis Co., Hood Co., Johnson Co., Kaufman Co., Parker Co., Rockwall Co., Tarrant Co. & Wise Co. | 18.2 |
| Sherman, Denison & Grayson Co. | 9.4 |
| Non-MSA Counties of Cooke, Delta, Erath, Fannin, Franklin, Hopkins, Hunt, Jack, Montague, Navarro, Palo Pinto, Rains, Somervell, & Van Zandt | 17.2 |
| | |
| Wichita Falls Area: | |
| Wichita Falls, Clay Co. & Wichita Co. | 12.4 |
| Non-MSA Counties of Archer, Baylor, Cottle, Foard, Hardeman, Wilbarger & Young | 11.0 |
| | |

| | |
|---|---|
| Abilene Area: | |
| Abilene, Callaghan Co., Jones Co. & Taylor Co. | 11.6 |
| Non-MSA Counties of Brown, Coleman, Comanche, Eastland, Fisher, Haskell, Kent, Knox, Mitchell, Nolan, Scurry, Shackleford, Stephens, Stonewall & Throckmorton | 10.9 |
| | |
| San Angelo Area: | |
| San Angelo & Tom Green Co. | 19.2 |
| Non-MSA Counties of Coke, Concho, Crockett, Irion, Kimble, McCullough, Mason, Menard, Reagan, Runnels, San Saba, Schleicher, Sterling, Sutton & Terrell | 20.0 |
| | |
| San Antonio Area: | |
| Laredo & Webb Co. | 87.3 |
| San Antonio, Bexar Co., Comal Co. & Guadalupe Co. | 47.8 |
| Non-MSA Counties of Atascosa, Bandera, Dimmit, Edwards, Frio, Gillespie, Gonzales, Jim Hogg, Karnes, Kendall, Kerr, Kinney, La Salle, McMullen, Maverick, Medina, Real, Uvalde, Val Verde, Wilson, Zapata & Zavala | 49.4 |
| | |
| Corpus Christi Area: | |
| Corpus Christi, Nueces Co. & San Patricio Co. | 41.7 |
| Non-MSA Counties of Aransas, Bee, Brooks, Duval, Jim Wells, Kenedy, Kleberg, Live Oak & Refugio | 44.2 |
| | |
| Brownsville, McAllen, Harlingen Area: | |
| Brownsville, Harlingen, San Benito & Cameron Co. | 71.0 |
| McAllen, Pharr, Edinburg & Hidalgo Co. | 72.8 |
| Non-MSA Counties of Starr & Willacy | 72.9 |
| | |
| Odessa, Midland Area: | |
| Midland & Midland Co. | 19.1 |
| Odessa & Ector Co. | 15.1 |
| Non-MSA Counties of Andrews, Crane, Glasscock, Howard, Loving, Martin, Pecos, Reeves, Upton, Ward & Winkler | 18.9 |
| | |
| El Paso Area: | |
| El Paso & El Paso Co. | 57.8 |
| Non-MSA Counties of Brewster, Culbertson, Hudspeth, Jeff Davis & Presidio | 49.0 |
| | |
| Lubbock Area: | |
| Lubbock & Lubbock Co. | 19.6 |
| Non-MSA Counties of Bailey, Borden, Cochran, Crosby, Dawson, Dickens, Floyd, Gaines, Garza, Hale, Hockley, King, Lamb, Lynn, Motley, Terry & Yoakum | 19.5 |
| | |
| Amarillo Area: | |
| Amarillo, Potter Co. & Randall Co. | 9.3 |
| Non-MSA Counties of Armstrong, Briscoe, Carson, Castro, Childress, Collingsworth, Dallam, Deaf Smith, Donley, Gray, Hall, Hansford, Hartley, Hemphill, Hutchinson, Lipscomb, Moore, Ochiltree, Oldham, Parmer, Roberts, Sherman, Swisher, & Wheeler | 11.0 |

# X-G

# HUD-4010 FEDERAL LABOR STANDARDS PROVISIONS

# FEDERAL LABOR STANDARDS PROVISIONS

**Form HUD-4010 (07/2021)**
**ref. Handbook 1344.1**

**U.S. Department of Housing and Urban Development Office of Davis-Bacon and Labor Standards**

A. APPLICABILITY

The Project or Program to which the construction work covered by this Contract pertains is being assisted by the United States of America, and the following Federal Labor Standards Provisions are included in this Contract pursuant to the provisions applicable to such Federal assistance.

(1) MINIMUM WAGES

(i) All laborers and mechanics employed or working upon the site of the work will be paid unconditionally and not less often than once a week, and without subsequent deduction or rebate on any account (except such payroll deductions as are permitted by regulations issued by the Secretary of Labor under the Copeland Act (29 CFR Part 3)), the full amount of wages and bona fide fringe benefits (or cash equivalents thereof) due at time of payment, computed at rates not less than those contained in the wage determination of the Secretary of Labor (which is attached hereto and made a part hereof), regardless of any contractual relationship which may be alleged to exist between the contractor and such laborers and mechanics. Contributions made or costs reasonably anticipated for bona fide fringe benefits under Section 1(b)(2) of the Davis-Bacon Act on behalf of laborers or mechanics are considered wages paid to such laborers or mechanics, subject to the provisions of 29 CFR 5.5(a)(1)(iv); also, regular contributions made or costs incurred for more than a weekly period (but not less often than quarterly) under plans, funds, or programs, which cover the particular weekly period, are deemed to be constructively made or incurred during such weekly period.

Such laborers and mechanics shall be paid the appropriate wage rate and fringe benefits on the wage determination for the classification of work actually performed, without regard to skill, except as provided in 29 CFR 5.5(a)(4)

Laborers or mechanics performing work in more than one classification may be compensated at the rate specified for each classification for the time actually worked therein: Provided, that the employer's payroll records accurately set forth the time spent in each classification in which work is performed. The wage determination (including any additional classification and wage rates conformed under 29 CFR 5.5(a)(1)(ii) and the Davis-Bacon poster (WH1321)) shall be posted at all times by the contractor and its subcontractors at the site of the work in a prominent and accessible place, where it can be easily seen by the workers.

(ii) Additional Classifications.

(A) Any class of laborers or mechanics which is not listed in the wage determination and which is to be employed under the contract shall be classified in conformance with the wage determination. HUD shall approve an additional classification and wage rate and fringe benefits therefor only when the following criteria have been met:

(1) The work to be performed by the classification requested is not performed by a classification in the wage determination;

(2) The classification is utilized in the area by the construction industry; and

(3) The proposed wage rate, including any bona fide fringe benefits, bears a reasonable relationship to the wage rates contained in the wage determination.

(B) If the contractor, the laborers and mechanics to be employed in the classification (if known), or their representatives, and HUD or its designee agree on the proposed classification and wage rate (including the amount designated for fringe benefits, where appropriate), a report of the action taken shall be sent by HUD or its designee to the Administrator of the Wage and Hour Division ("Administrator"), Employment Standards Administration, U.S. Department of Labor, Washington, D.C. 20210. The Administrator, or an authorized representative, will approve, modify, or disapprove every additional classification action within 30 days of receipt and so advise HUD or its designee or will notify HUD or its designee within the 30-day period that additional time is necessary. (Approved by the Office of Management and Budget ("OMB") under OMB control number 1235-0023.)

(C) In the event the contractor, the laborers or mechanics to be employed in the classification or their representatives, or HUD or its designee do not agree on the proposed classification and wage rate (including the amount designated for fringe benefits, where appropriate), HUD or its designee shall refer the questions, including the views of all interested parties and the recommendation of HUD or its designee, to the Administrator for determination. The Administrator, or an authorized representative, will issue a determination within 30 days of receipt and so advise HUD or its designee or will notify HUD or its designee within the 30-day period that additional time is necessary. (Approved by the Office of Management and Budget under OMB Control Number 1235-0023.)

(D) The wage rate (including fringe benefits, where appropriate) determined pursuant to subparagraphs
(1)(ii)(B) or (C) of this paragraph, shall be paid to all workers performing work in the classification under this Contract from the first day on which work is performed in the classification.

(iii) Whenever the minimum wage rate prescribed in the contract for a class of laborers or mechanics includes a fringe benefit which is not expressed as an hourly rate, the contractor shall either pay the benefit as stated in the wage determination or shall pay another bona fide fringe benefit or an hourly cash equivalent thereof.

(iv) If the contractor does not make payments to a trustee or other third person, the contractor may consider as part of the wages of any laborer or mechanic the amount of any costs reasonably anticipated in providing bona fide fringe benefits under a plan or program, Provided, that the Secretary of Labor has found, upon the written request of the contractor, that the applicable standards of the Davis-Bacon Act have been met. The Secretary of Labor may require the contractor to set aside in a separate account assets for the meeting of obligations under the plan or program. (Approved by the Office of Management and Budget under OMB Control Number 1235-0023.)

(2) Withholding. HUD or its designee shall, upon its own action or upon written request of an authorized representative of the U.S. Department of Labor, withhold or cause to be withheld from the contractor under this contract or any other Federal contract with the same prime contractor, or any other Federally-assisted contract subject to Davis-Bacon prevailing wage requirements which is held by the same prime contractor, so much of the accrued payments or advances as may be considered necessary to pay laborers and mechanics, including apprentices, trainees and helpers, employed by the contractor or any subcontractor the full amount of wages required by the contract. In the event of failure to pay any laborer or mechanic, including any apprentice, trainee or helper, employed or working on the site of the work, all or part of the wages required by the contract, HUD or its designee may, after written notice to the contractor, sponsor, applicant, or owner, take such action as may be necessary to cause the suspension of any further payment, advance, or guarantee of funds until such violations have ceased. HUD or its designee may, after written notice to the contractor, disburse such amounts withheld for and on account of the contractor or subcontractor to the respective employees to whom they are due. The Department of Labor shall make such disbursements in the case of direct Davis-Bacon Act contracts.

(3) Payrolls and basic records.

(i) Maintaining Payroll Records. Payrolls and basic records relating thereto shall be maintained by the contractor during the course of the work and preserved for a period of three years thereafter for all laborers and mechanics working at the site of the work. Such records shall contain the name, address, and social security number of each such worker, his or her correct classification(s), hourly rates of wages paid (including rates of contributions or costs anticipated for bona fide fringe benefits or cash equivalents thereof of the types described in Section 1(b)(2)(B) of the Davis-Bacon Act), daily and weekly number of hours worked, deductions made, and actual wages paid.

Whenever the Secretary of Labor has found, under 29 CFR 5.5(a)(1)(iv), that the wages of any laborer or mechanic include the amount of any costs reasonably anticipated in providing benefits under a plan or program described in Section 1(b)(2)(B) of the Davis-Bacon Act, the contractor shall maintain records which show that the commitment to provide such benefits is enforceable, that the plan or program is financially responsible, and that the plan or program has been communicated in writing to the laborers or mechanics affected, and records which show the costs anticipated or the actual cost incurred in providing such benefits.

Contractors employing apprentices or trainees under approved programs shall maintain written evidence of the registration of apprenticeship programs and certification of trainee programs, the registration of the apprentices and trainees, and the ratios and wage rates prescribed in the applicable programs. (Approved by the Office of Management and Budget under OMB Control Numbers 1235-0023 and 1215-0018)

(ii) Certified Payroll Reports.

(A) The contractor shall submit weekly, for each week in which any contract work is performed, a copy of all payrolls to HUD or its designee if the agency is a party to the contract, but if the agency is not such a party, the contractor will submit the payrolls to the applicant sponsor, or owner, as the case may be, for transmission to HUD or its designee. The payrolls submitted shall set out accurately and completely all of the information required to be maintained under 29 CFR 5.5(a)(3)(i), except that full social security numbers and home addresses shall not be included on weekly transmittals. Instead, the payrolls only need to include an individually identifying number for each employee (e.g., the last four digits of the employee's social security number). The required weekly payroll information may be submitted in any form desired. Optional Form WH-347 is available for this purpose from the Wage and Hour Division Web site at https://www.dol.gov/agencies/whd/forms or its successor site. The prime contractor is responsible for the submission of copies of payrolls by all subcontractors.

Contractors and subcontractors shall maintain the full social security number and current address of each covered worker, and shall provide them upon request to HUD or its designee if the agency is a party to the contract, but if the agency is not such a party, the contractor will submit the payrolls to the applicant sponsor, or owner, as the case may be, for transmission to HUD or its designee, the contractor, or the Wage and Hour Division of the U.S. Department of Labor for purposes of an investigation or audit of compliance with prevailing wage requirements. It is not a violation of this subparagraph for a prime contractor to require a subcontractor to provide addresses and social security numbers to the prime contractor for its own records, without weekly submission to HUD or its designee. (Approved by the Office of Management and Budget under OMB Control Number 1235-0008.)

(B) Each payroll submitted shall be accompanied by a "Statement of Compliance," signed by the contractor or subcontractor or his or her agent who pays or supervises the payment of the persons employed under the contract and shall certify the following:

(1) That the payroll for the payroll period contains the information required to be provided under 29 CFR 5.5(a)(3)(ii), the appropriate information is being maintained under 29 CFR 5.5(a)(3)(i), and that such information is correct and complete;
(2) That each laborer or mechanic (including each helper, apprentice, and trainee) employed on the contract during the payroll period has been paid the full weekly wages earned, without rebate, either directly or indirectly, and that no deductions have been made either directly or indirectly from the full wages earned, other than permissible deductions as set forth in 29 CFR Part 3;
(3) That each laborer or mechanic has been paid not less than the applicable wage rates and fringe benefits or cash equivalents for the classification of work performed, as specified in the applicable wage determination incorporated into the contract; and

(C) The weekly submission of a properly executed certification set forth on the reverse side of Optional Form WH-347 shall satisfy the requirement for submission of the "Statement of Compliance" required by subparagraph (a)(3)(ii)(b).

(D) The falsification of any of the above certifications may subject the contractor or subcontractor to civil or criminal prosecution under Section 1001 of Title 18 and Section 3729 of Title 31 of the United States Code.
(iii) The contractor or subcontractor shall make the records required under subparagraph (a)(3)(i) available for inspection, copying, or transcription by authorized representatives of HUD or its designee or the U.S. Department of Labor, and shall permit such representatives to interview employees during working hours on the job. If the contractor or subcontractor fails to submit the required records or to make them available, HUD or its designee may, after written notice to the contractor, sponsor, applicant, or owner, take such action as may be necessary to cause the suspension of any further payment, advance, or guarantee of funds. Furthermore, failure to submit the required records upon request or to make such records available may be grounds for debarment action pursuant to 29 CFR 5.12.

(4) Apprentices and Trainees.
(i) Apprentices. Apprentices will be permitted to work at less than the predetermined rate for the work they performed when they are employed pursuant to and individually registered in a bona fide apprenticeship program registered with the U.S. Department of Labor, Employment and Training Administration, Office of Apprenticeship Training, Employer and Labor Services, or with a State Apprenticeship Agency recognized by the Office, or if a person is employed in his or her first 90 days of probationary employment as an apprentice in such an apprenticeship program, who is not individually registered in the program, but who has been certified by the Office of Apprenticeship Training, Employer and Labor Services, or a State Apprenticeship Agency (where appropriate), to be eligible for probationary employment as an apprentice.

The allowable ratio of apprentices to journeymen on the job site in any craft classification shall not be greater than the ratio permitted to the contractor as to the entire work force under the registered program. Any worker listed on a payroll at an apprentice wage rate, who is not registered or otherwise employed as stated above, shall be paid not less than the applicable wage rate on the wage determination for the classification of work actually performed. In addition, any apprentice performing work on the job site in excess of the ratio permitted under the registered program shall be paid not less than the applicable wage rate on the wage determination for the work actually performed. Where a contractor is performing construction on a project in a locality other than that in which its program is registered, the ratios and wage rates (expressed in percentages of the journeyman's hourly rate) specified in the contractor's or subcontractor's registered program shall be observed.

Every apprentice must be paid at not less than the rate specified in the registered program for the apprentice's level of progress, expressed as a percentage of the journeymen hourly rate specified in the applicable wage determination.

Apprentices shall be paid fringe benefits in accordance with the provisions of the apprenticeship program. If the apprenticeship program does not specify fringe benefits, apprentices must be paid the full amount of fringe benefits listed on the wage determination for the applicable classification. If the Administrator determines that a different practice prevails for the applicable apprentice classification, fringe benefits shall be paid in accordance with that determination. In the event the Office of Apprenticeship Training, Employer and Labor Services, or a State Apprenticeship Agency recognized by the Office, withdraws approval of an apprenticeship program, the contractor will no longer be permitted to utilize apprentices at less than the applicable predetermined rate for the work performed until an acceptable program is approved.

(ii) Trainees. Except as provided in 29 CFR 5.16, trainees will not be permitted to work at less than the predetermined rate for the work performed, unless they are employed pursuant to and individually registered in a program which has received prior approval, evidenced by formal certification by the U.S. Department of Labor, Employment and Training Administration. The ratio of trainees to journeymen on the job site shall not be greater than permitted under the plan approved by the Employment and Training Administration. Every trainee must be paid at not less than the rate specified in the approved program for the trainee's level of progress, expressed as a percentage of the journeyman hourly rate specified in the applicable wage determination. Trainees shall be paid fringe benefits in accordance with the provisions of the trainee program. If the trainee program does not mention fringe benefits, trainees shall be paid the full amount of fringe benefits listed on the wage determination unless the Administrator of the Wage and Hour Division determines that there is an apprenticeship program associated with the corresponding journeyman wage rate on the wage determination which provides for less than full fringe benefits for apprentices. Any employee listed on the payroll at a trainee rate who is not registered and participating in a training plan approved by the Employment and Training Administration shall be paid not less than the applicable wage rate on the wage determination for the work actually performed.

In addition, any trainee performing work on the job site in excess of the ratio permitted under the registered program shall be paid not less than the applicable wage rate on the wage determination for the work actually performed. In the event the Employment and Training Administration withdraws approval of a training program, the contractor will no longer be permitted to utilize trainees at less than the applicable predetermined rate for the work performed until an acceptable program is approved.

(iii) Equal employment opportunity. The utilization of apprentices, trainees, and journeymen under 29 CFR Part 5 shall be in conformity with the equal employment opportunity requirements of Executive Order 11246, as amended, and 29 CFR Part 30.

(5) Compliance with Copeland Act requirements. The contractor shall comply with the requirements of 29 CFR Part 3, which are incorporated by reference in this Contract.

(6) Subcontracts. The contractor or subcontractor will insert in any subcontracts the clauses contained in subparagraphs (1) through (11) in this paragraph (a) and such other clauses as HUD or its designee may, by appropriate instructions, require, and a copy of the applicable prevailing wage decision, and also a clause requiring the subcontractors to include these clauses in any lower tier subcontracts. The prime contractor shall be responsible for the compliance by any subcontractor or lower tier subcontractor with all the contract clauses in this paragraph.

(7) Contract termination; debarment. A breach of the contract clauses in 29 CFR 5.5 may be grounds for termination of the contract and for debarment as a contractor and a subcontractor as provided in 29 CFR 5.12.

(8) Compliance with Davis-Bacon and Related Act Requirements. All rulings and interpretations of the Davis-Bacon and Related Acts contained in 29 CFR Parts 1, 3, and 5 are herein incorporated by reference in this Contract.

(9) Disputes concerning labor standards. Disputes arising out of the labor standards provisions of this Contract shall not be subject to the general disputes clause of this Contract. Such disputes shall be resolved in accordance with the procedures of the U.S. Department of Labor set forth in 29 CFR Parts 5, 6, and 7. Disputes within the meaning of this clause include disputes between the contractor (or any of its subcontractors) and HUD or its designee, the U.S. Department of Labor, or the employees or their representatives.

(10) Certification of Eligibility.
(i) By entering into this Contract, the contractor certifies that neither it (nor he or she) nor any person or firm who has an interest in the contractor's firm is a person or firm ineligible to be awarded Government contracts by virtue of Section 3(a) of the Davis-Bacon Act or 29 CFR 5.12(a)(1) or to be awarded HUD contracts or participate in HUD programs pursuant to 24 CFR Part 24.

(ii) No part of this Contract shall be subcontracted to any person or firm ineligible for award of a Government contract by virtue of Section 3(a) of the Davis-Bacon Act or 29 CFR 5.12(a)(1) or to be awarded HUD contracts or participate in HUD programs pursuant to 24 CFR Part 24.
(iii) Anyone who knowingly makes, presents, or submits a false, fictitious, or fraudulent statement, representation or certification is subject to criminal, civil and/or administrative sanctions, including fines, penalties, and imprisonment (e.g., 18 U.S.C. §§ 287, 1001, 1010, 1012; 31 U.S.C. §§ 3729, 3802.

(11) Complaints, Proceedings, or Testimony by Employees. No laborer or mechanic, to whom the wage, salary, or other labor standards provisions of this Contract are applicable, shall be discharged or in any other manner discriminated against by the contractor or any subcontractor because such employee has filed any complaint or instituted or caused to be instituted any proceeding or has testified or is about to testify in any proceeding under or relating to the labor standards applicable under this Contract to his employer.

B. CONTRACT WORK HOURS AND SAFETY STANDARDS ACT
The provisions of this paragraph (b) are applicable where the amount of the prime contract exceeds $100,000. As used in this paragraph, the terms "laborers" and "mechanics" include watchmen and guards.
(1) Overtime requirements. No contractor or subcontractor contracting for any part of the contract work, which may require or involve the employment of laborers or mechanics, shall require or permit any such laborer or mechanic in any workweek in which the individual is employed on such work to work in excess of 40 hours in such workweek, unless such laborer or mechanic receives compensation at a rate not less than one and one-half times the basic rate of pay for all hours worked in excess of 40 hours in such workweek.
(2) Violation; liability for unpaid wages; liquidated damages. In the event of any violation of the clause set forth in subparagraph B(1) of this paragraph, the contractor, and any subcontractor responsible therefor, shall be liable for the unpaid wages. In addition, such contractor and subcontractor shall be liable to the United States (in the case of work done under contract for the District of Columbia or a territory, to such District or to such territory) for liquidated damages. Such liquidated damages shall be computed with respect to each individual laborer or mechanic, including watchmen and guards, employed in violation of the clause set forth in subparagraph B(1) of this paragraph, in the sum of $31 for each calendar day on which such individual was required or permitted to work in excess of the standard workweek of 40 hours without payment of the overtime wages required by the clause set forth in subparagraph B(1) of this paragraph. In accordance with the Federal Civil Penalties Inflation Adjustment

Act of 1990 (28 U.S.C. § 2461 Note), the Department of Labor adjusts this civil monetary penalty for inflation no later than January 15 each year.

(3) Withholding for unpaid wages and liquidated damages. HUD or its designee shall, upon its own action or upon written request of an authorized representative of the U.S. Department of Labor, withhold or cause to be withheld from any moneys payable on account of work performed by the contractor or subcontractor under any such contract, or any other Federal contract with the same prime contract, or any other Federally-assisted contract subject to the Contract Work Hours and Safety Standards Act which is held by the same prime contractor, such sums as may be determined to be necessary to satisfy any liabilities of such contractor or subcontractor for unpaid wages and liquidated damages, as provided in the clause set forth in subparagraph B(2) of this paragraph.

(4) Subcontracts. The contractor or subcontractor shall insert in any subcontracts the clauses set forth in subparagraph B(1) through (4) of this paragraph and also a clause requiring the subcontractors to include these clauses in any lower tier subcontracts. The prime contractor shall be responsible for compliance by any subcontractor or lower tier subcontractor with the clauses set forth in subparagraphs B(1) through (4) of this paragraph.

C. HEALTH AND SAFETY

The provisions of this paragraph (c) are applicable where the amount of the prime contract exceeds $100,000.

(1) No laborer or mechanic shall be required to work in surroundings or under working conditions which are unsanitary, hazardous, or dangerous to his or her health and safety, as determined under construction safety and health standards promulgated by the Secretary of Labor by regulation.

(2) The contractor shall comply with all regulations issued by the Secretary of Labor pursuant to 29 CFR Part 1926 and failure to comply may result in imposition of sanctions pursuant to the Contract Work Hours and Safety Standards Act, (Public Law
91-54, 83 Stat 96), 40 U.S.C. § 3701 et seq.

(3) The contractor shall include the provisions of this paragraph in every subcontract, so that such provisions will be binding on each subcontractor. The contractor shall take such action with respect to any subcontractor as the Secretary of Housing and Urban Development or the Secretary of Labor shall direct as a means of enforcing such provisions.

# X-H

# TITLE 29 – LABOR

# TITLE 29: LABOR

PART 3—CONTRACTORS AND SUBCONTRACTORS ON PUBLIC BUILDING OR PUBLIC WORK FINANCED IN WHOLE OR IN PART BY LOANS OR GRANTS FROM THE UNITED STATES

**Contents**

§3.1 Purpose and scope.
§3.2 Definitions.
§3.3 Weekly statement with respect to payment of wages.
§3.4 Submission of weekly statements and the preservation and inspection of weekly payroll records.
§3.5 Payroll deductions permissible without application to or approval of the Secretary of Labor.
§3.6 Payroll deductions permissible with the approval of the Secretary of Labor.
§3.7 Applications for the approval of the Secretary of Labor.
§3.8 Action by the Secretary of Labor upon applications.
§3.9 Prohibited payroll deductions.
§3.10 Methods of payment of wages.
§3.11 Regulations part of contract.

AUTHORITY: R.S. 161, sec. 2, 48 Stat. 848; Reorg. Plan No. 14 of 1950, 64 Stat. 1267; 5 U.S.C. 301; 40 U.S.C. 3145; Secretary's Order 01-2008; and Employment Standards Order No. 2001-01.

SOURCE: 29 FR 97, Jan. 4, 1964, unless otherwise noted.

## §3.1 Purpose and scope.

This part prescribes “anti-kickback” regulations under section 2 of the Act of June 13, 1934, as amended (40 U.S.C. 276c), popularly known as the Copeland Act. This part applies to any contract which is subject to Federal wage standards and which is for the construction, prosecution, completion, or repair of public buildings, public works or buildings or works financed in whole or in part by loans or grants from the United States. The part is intended to aid in the enforcement of the minimum wage provisions of the Davis-Bacon Act and the various statutes dealing with federally assisted construction that contain similar minimum wage provisions, including those provisions which are not subject to Reorganization Plan No. 14 (e.g., the College Housing Act of 1950, the Federal Water Pollution Control Act, and the Housing Act of 1959), and in the enforcement of the overtime provisions of the Contract Work Hours Standards Act whenever they are applicable to construction work. The part details the obligation of contractors and subcontractors relative to the weekly submission of statements regarding the wages paid on work covered thereby; sets forth the circumstances and procedures governing the making of payroll deductions from the wages of those employed on such work; and delineates the methods of payment permissible on such work.

## §3.2 Definitions.

As used in the regulations in this part:

(a) The terms *building* or *work* generally include construction activity as distinguished from manufacturing, furnishing of materials, or servicing and maintenance work. The terms include, without limitation, buildings, structures, and improvements of all types, such as bridges, dams, plants, highways, parkways, streets, subways, tunnels, sewers, mains, powerlines, pumping stations, railways, airports, terminals, docks, piers, wharves, ways, lighthouses, buoys, jetties, breakwaters, levees, and canals; dredging, shoring, scaffolding, drilling, blasting, excavating, clearing, and landscaping. Unless conducted in connection with and at the site of such a building or work as is described in the foregoing sentence, the manufacture or furnishing of materials, articles, supplies, or equipment (whether or not a Federal or State agency acquires title to such materials, articles, supplies, or equipment during the course of the manufacture or furnishing, or owns the materials from which they are manufactured or furnished) is not a *building* or *work* within the meaning of the regulations in this part.

(b) The terms *construction, prosecution, completion,* or *repair* mean all types of work done on a particular building or work at the site thereof, including, without limitation, altering, remodeling, painting and

decorating, the transporting of materials and supplies to or from the building or work by the employees of the construction contractor or construction subcontractor, and the manufacturing or furnishing of materials, articles, supplies, or equipment on the site of the building or work, by persons employed at the site by the contractor or subcontractor.

(c) The terms *public building* or *public work* include building or work for whose construction, prosecution, completion, or repair, as defined above, a Federal agency is a contracting party, regardless of whether title thereof is in a Federal agency.

(d) The term *building or work financed in whole or in part by loans or grants from the United States* includes building or work for whose construction, prosecution, completion, or repair, as defined above, payment or part payment is made directly or indirectly from funds provided by loans or grants by a Federal agency. The term includes building or work for which the Federal assistance granted is in the form of loan guarantees or insurance.

(e) Every person paid by a contractor or subcontractor in any manner for his labor in the construction, prosecution, completion, or repair of a public building or public work or building or work financed in whole or in part by loans or grants from the United States is *employed* and receiving *wages,* regardless of any contractual relationship alleged to exist between him and the real employer.

(f) The term *any affiliated person* includes a spouse, child, parent, or other close relative of the contractor or subcontractor; a partner or officer of the contractor or subcontractor; a corporation closely connected with the contractor or subcontractor as parent, subsidiary, or otherwise, and an officer or agent of such corporation.

(g) The term *Federal agency* means the United States, the District of Columbia, and all executive departments, independent establishments, administrative agencies, and instrumentalities of the United States and of the District of Columbia, including corporations, all or substantially all of the stock of which is beneficially owned by the United States, by the District of Columbia, or any of the foregoing departments, establishments, agencies, and instrumentalities.

[29 FR 97, Jan. 4, 1964, as amended at 38 FR 32575, Nov. 27, 1973]

§3.3 Weekly statement with respect to payment of wages.

(a) As used in this section, the term *employee* shall not apply to persons in classifications higher than that of laborer or mechanic and those who are the immediate supervisors of such employees.

(b) Each contractor or subcontractor engaged in the construction, prosecution, completion, or repair of any public building or public work, or building or work financed in whole or in part by loans or grants from the United States, shall furnish each week a statement with respect to the wages paid each of its employees engaged on work covered by this part 3 and part 5 of this title during the preceding weekly payroll period. This statement shall be executed by the contractor or subcontractor or by an authorized officer or employee of the contractor or subcontractor who supervises the payment of wages, and shall be on the back of Form WH 347, “Payroll (For Contractors Optional Use)” or on any form with identical wording. Copies of Form WH 347 may be obtained from the Government contracting or sponsoring agency or from the Wage and Hour Division Web site at *http://www.dol.gov/esa/whd/forms/wh347instr.htm* or its successor site.

(c) The requirements of this section shall not apply to any contract of $2,000 or less.

(d) Upon a written finding by the head of a Federal agency, the Secretary of Labor may provide reasonable limitations, variations, tolerances, and exemptions from the requirements of this section subject to such conditions as the Secretary of Labor may specify.

[29 FR 97, Jan. 4, 1964, as amended at 33 FR 10186, July 17, 1968; 47 FR 23679, May 28, 1982; 73 FR 77511, Dec. 19, 2008]

§3.4 Submission of weekly statements and the preservation and inspection of weekly payroll records.

(a) Each weekly statement required under §3.3 shall be delivered by the contractor or subcontractor, within seven days after the regular payment date of the payroll period, to a representative of a Federal

or State agency in charge at the site of the building or work, or, if there is no representative of a Federal or State agency at the site of the building or work, the statement shall be mailed by the contractor or subcontractor, within such time, to a Federal or State agency contracting for or financing the building or work. After such examination and check as may be made, such statement, or a copy thereof, shall be kept available, or shall be transmitted together with a report of any violation, in accordance with applicable procedures prescribed by the United States Department of Labor.

(b) Each contractor or subcontractor shall preserve his weekly payroll records for a period of three years from date of completion of the contract. The payroll records shall set out accurately and completely the name and address of each laborer and mechanic, his correct classification, rate of pay, daily and weekly number of hours worked, deductions made, and actual wages paid. Such payroll records shall be made available at all times for inspection by the contracting officer or his authorized representative, and by authorized representatives of the Department of Labor.

(Reporting and recordkeeping requirements in paragraph (b) have been approved by the Office of Management and Budget under control number 1215-0017)

[29 FR 97, Jan. 4, 1964, as amended at 47 FR 145, Jan. 5, 1982]

§3.5 Payroll deductions permissible without application to or approval of the Secretary of Labor.

Deductions made under the circumstances or in the situations described in the paragraphs of this section may be made without application to and approval of the Secretary of Labor:

(a) Any deduction made in compliance with the requirements of Federal, State, or local law, such as Federal or State withholding income taxes and Federal social security taxes.

(b) Any deduction of sums previously paid to the employee as a bona fide prepayment of wages when such prepayment is made without discount or interest. A *bona fide prepayment of wages* is considered to have been made only when cash or its equivalent has been advanced to the person employed in such manner as to give him complete freedom of disposition of the advanced funds.

(c) Any deduction of amounts required by court process to be paid to another, unless the deduction is in favor of the contractor, subcontractor, or any affiliated person, or when collusion or collaboration exists.

(d) Any deduction constituting a contribution on behalf of the person employed to funds established by the employer or representatives of employees, or both, for the purpose of providing either from principal or income, or both, medical or hospital care, pensions or annuities on retirement, death benefits, compensation for injuries, illness, accidents, sickness, or disability, or for insurance to provide any of the foregoing, or unemployment benefits, vacation pay, savings accounts, or similar payments for the benefit of employees, their families and dependents: *Provided, however,* That the following standards are met:

(1) The deduction is not otherwise prohibited by law;

(2) It is either:

(i) Voluntarily consented to by the employee in writing and in advance of the period in which the work is to be done and such consent is not a condition either for the obtaining of or for the continuation of employment, or

(ii) provided for in a bona fide collective bargaining agreement between the contractor or subcontractor and representatives of its employees;

(3) No profit or other benefit is otherwise obtained, directly or indirectly, by the contractor or subcontractor or any affiliated person in the form of commission, dividend, or otherwise; and

(4) The deductions shall serve the convenience and interest of the employee.

(e) Any deduction contributing toward the purchase of United States Defense Stamps and Bonds when voluntarily authorized by the employee.

(f) Any deduction requested by the employee to enable him to repay loans to or to purchase shares in credit unions organized and operated in accordance with Federal and State credit union statutes.

(g) Any deduction voluntarily authorized by the employee for the making of contributions to governmental or quasi-governmental agencies, such as the American Red Cross.

(h) Any deduction voluntarily authorized by the employee for the making of contributions to Community Chests, United Givers Funds, and similar charitable organizations.
(i) Any deductions to pay regular union initiation fees and membership dues, not including fines or special assessments: *Provided, however,* that a collective bargaining agreement between the contractor or subcontractor and representatives of its employees provides for such deductions and the deductions are not otherwise prohibited by law.
(j) Any deduction not more than for the "reasonable cost" of board, lodging, or other facilities meeting the requirements of section 3(m) of the Fair Labor Standards Act of 1938, as amended, and part 531 of this title. When such a deduction is made the additional records required under §516.25(a) of this title shall be kept.
(k) Any deduction for the cost of safety equipment of nominal value purchased by the employee as his own property for his personal protection in his work, such as safety shoes, safety glasses, safety gloves, and hard hats, if such equipment is not required by law to be furnished by the employer, if such deduction is not violative of the Fair Labor Standards Act or prohibited by other law, if the cost on which the deduction is based does not exceed the actual cost to the employer where the equipment is purchased from him and does not include any direct or indirect monetary return to the employer where the equipment is purchased from a third person, and if the deduction is either
(1) Voluntarily consented to by the employee in writing and in advance of the period in which the work is to be done and such consent is not a condition either for the obtaining of employment or its continuance; or
(2) Provided for in a bona fide collective bargaining agreement between the contractor or subcontractor and representatives of its employees.
[29 FR 97, Jan. 4, 1964, as amended at 36 FR 9770, May 28, 1971]
§3.6 Payroll deductions permissible with the approval of the Secretary of Labor.
Any contractor or subcontractor may apply to the Secretary of Labor for permission to make any deduction not permitted under §3.5. The Secretary may grant permission whenever he finds that:
(a) The contractor, subcontractor, or any affiliated person does not make a profit or benefit directly or indirectly from the deduction either in the form of a commission, dividend, or otherwise;
(b) The deduction is not otherwise prohibited by law;
(c) The deduction is either (1) voluntarily consented to by the employee in writing and in advance of the period in which the work is to be done and such consent is not a condition either for the obtaining of employment or its continuance, or (2) provided for in a bona fide collective bargaining agreement between the contractor or subcontractor and representatives of its employees; and
(d) The deduction serves the convenience and interest of the employee.
§3.7 Applications for the approval of the Secretary of Labor.
Any application for the making of payroll deductions under §3.6 shall comply with the requirements prescribed in the following paragraphs of this section:
(a) The application shall be in writing and shall be addressed to the Secretary of Labor.
(b) The application need not identify the contract or contracts under which the work in question is to be performed. Permission will be given for deductions on all current and future contracts of the applicant for a period of 1 year. A renewal of permission to make such payroll deduction will be granted upon the submission of an application which makes reference to the original application, recites the date of the Secretary of Labor's approval of such deductions, states affirmatively that there is continued compliance with the standards set forth in the provisions of §3.6, and specifies any conditions which have changed in regard to the payroll deductions.
(c) The application shall state affirmatively that there is compliance with the standards set forth in the provisions of §3.6. The affirmation shall be accompanied by a full statement of the facts indicating such compliance.

(d) The application shall include a description of the proposed deduction, the purpose to be served thereby, and the classes of laborers or mechanics from whose wages the proposed deduction would be made.
(e) The application shall state the name and business of any third person to whom any funds obtained from the proposed deductions are to be transmitted and the affiliation of such person, if any, with the applicant.
[29 FR 97, Jan. 4, 1964, as amended at 36 FR 9771, May 28, 1971]
§3.8 Action by the Secretary of Labor upon applications.
The Secretary of Labor shall decide whether or not the requested deduction is permissible under provisions of §3.6; and shall notify the applicant in writing of his decision.
§3.9 Prohibited payroll deductions.
Deductions not elsewhere provided for by this part and which are not found to be permissible under §3.6 are prohibited.
§3.10 Methods of payment of wages.
The payment of wages shall be by cash, negotiable instruments payable on demand, or the additional forms of compensation for which deductions are permissible under this part. No other methods of payment shall be recognized on work subject to the Copeland Act.
§3.11 Regulations part of contract.
All contracts made with respect to the construction, prosecution, completion, or repair of any public building or public work or building or work financed in whole or in part by loans or grants from the United States covered by the regulations in this part shall expressly bind the contractor or subcontractor to comply with such of the regulations in this part as may be applicable. In this regard, see §5.5(a) of this subtitle.

# X-I

# CONCERNING LABOR STANDARDS AND PREVAILING WAGE REQUIREMENTS

U.S. DEPARTMENT OF HOUSING AND URBAN DEVELOPMENT
COMMUNITY DEVELOPMENT BLOCK GRANT PROGRAM
CONTRACTOR'S CERTIFICATION

# CONCERNING LABOR STANDARDS AND PREVAILING WAGE REQUIREMENTS

*Updated from TDA July 2022 Appendix F: Sample Construction Bid Packet*

| | |
|---|---|
| TO (appropriate recipient) | DATE |
| | PROJECT NUMBER (if any) |
| C/O | PROJECT NAME |

1. The undersigned, having executed a contract with _____ for the construction of the above-identified project, acknowledges that:

   (a) The Labor Standards provisions are included in the aforesaid contract,

   (b) Correction of any infractions of the aforesaid conditions, including infractions by any subcontractors and any lower tier subcontractors, is Contractor's responsibility.

2. Certifies that:

   (a) Neither Contractor nor any firm, partnership or association in which it has substantial interest is designated as an ineligible contractor by the Comptroller General of the United States pursuant to Section 5.6(b) of the Regulations of the Secretary of Labor, Part 5 (29 CFR, Part 5) or pursuant to Section 3(a) of the Davis-Bacon Act, as amended.

   (b) No part of the aforementioned contract has been or will be subcontracted to any subcontractor if such subcontractor or any firm, corporation, partnership or association in which such subcontractor has a substantial interest is designated as an ineligible contractor pursuant to any of the aforementioned regulatory or statutory provisions.

3. Contractor agrees to obtain and forward to the aforementioned recipient within ten days after the execution of any subcontract, including those executed by subcontractors and any lower tier subcontractors, a Subcontractor's Certification Concerning Labor Standards and Prevailing Wage Requirements executed by the subcontractors.

4. Certifies that:

   (a) The legal name and the business address of the undersigned are:

   (b) The undersigned is (choose one):

| | |
|---|---|
| (1) A SINGLE PROPRIETORSHIP | (3) A CORPORATION ORGANIZED IN THE STATE OF |
| (2) A PARTNERSHIP | (4) OTHER ORGANIZATION (Describe) |

   (c) The name, title and address of the owner, partners or officers of the undersigned are:

| NAME | TITLE | ADDRESS |
|---|---|---|
| | | |
| | | |
| | | |
| | | |

| | | |
|---|---|---|
| | | |
| | | |

(d) The names and addresses of all other persons having a substantial interest in the undersigned, and the nature of the interest are:

| NAME | ADDRESS | NATURE OF INTEREST |
|---|---|---|
| | | |
| | | |
| | | |
| | | |
| | | |

(e) The names, addresses and trade classifications of all other building construction contractors in which the undersigned has a substantial interest are:

| NAME | ADDRESS | TRADE CLASSIFICATION |
|---|---|---|
| | | |
| | | |
| | | |
| | | |
| | | |

_____
(Contractor)

Date _____

By _____

# X-J

# PROJECT-SPECIFIC GENERAL WAGE DECISION

# Project-Specific General Wage Decision

**[GrantWorks to Insert Project Specific Wage Decision]**

# X-K

# TDA – TEMPORARY SIGNAGE REQUIREMENTS

# Temporary Signage Requirements

## Temporary Signage

All construction projects utilizing TxCDBG funding must have temporary signage erected in a prominent location at the construction project site. For projects with a Citywide benefit but multiple project locations, (E.g., water meter replacement throughout the city, manhole replacement throughout the city, etc.) the temporary signage may be located in a central location such as City Hall or the County Courthouse provided that the temporary signage is accompanied by a description or map of the specific locations. For additional guidance for similarly scattered project locations, contact TDA staff. A photo of this signage must be submitted to TDA prior to the release of construction funds.

Requirements of temporary signage include

- placement in a prominent visible public area that is not blocked or obscured;
- constructed of durable materials;
- minimum size of 11” x 17” with lettering no smaller than one-half inch;

## Required text (or similar)*:

*This project is funded by the Texas Department of Agriculture with funds allocated by the U.S. Department of Housing and Urban Development through the Community Development Block Grant Program.*

***NOTE:** The text requirement above is satisfied by using the text in this manual. Alternate wording may be approved by TDA upon request.

Temporary signage may be reused for future TxCDBG projects as appropriate.

GrantWorks can provide a temporary sign meeting the minimum requirements at the pre-construction conference, upon request.

# X-L

# REQUIRED CONTRACT PROVISIONS

# REQUIRED CONTRACT PROVISIONS

For Construction Contracts and Subcontracts

Sourced from TDA 2022 Manual- Appendix B Required Contract Provisions

https://texasagriculture.gov/Grants-Services/Rural-Economic-Development/Rural-Community-Development-Block-Grant-CDBG/Forms

For all contracts

- Debarment and Suspension
- Access to Records
- Records Retention – 3 Years
- Conflict of Interest Questionnaire – Form CIQ (Texas Ethics Commission)
- Termination for Cause (>$10K)
- Admin., Contractual, Legal Remedies (>$50K)
- (If applicable) Option Contract - Procurement Before Application
- Byrd Anti-Lobbying (≥$100K)

Additional provisions for administration & engineering contracts associated with construction contracts

- Equal Opportunity Clause Contracts > $10K
- Section 3 Contract Provisions (administration services on all TxCDBG Agreements)

Additional provisions for construction contracts

- HUD 4010
- Davis Bacon and Copeland Anti-Kickback (>$2K)
- Equal Opportunity Clause (>$10K)
- Contract Work Hours and Safety Standards Act
- Section 3 Contract Provisions (All TxCDBG Agreements)
- Clean Air and Water Act (>$150K)
- Domestic Preferences for Procurements

# REQUIRED CONTRACT PROVISIONS

*Italics – Explanatory; not contract language*

## All Contracts

| THRESHOLD | PROVISION | CITATION |
|---|---|---|
| None | (H) Debarment and Suspension (Executive Orders 12549 and 12689)—A contract award (see 2 CFR 180.220) must not be made to parties listed on the government-wide Excluded Parties List System in the System for Award Management (SAM), in accordance with the OMB guidelines at 2 CFR 180 that implement Executive Orders 12549 (3 CFR Part 1986 Comp., p. 189) and 12689 (3 CFR Part 1989 Comp., p. 235), ''Debarment and Suspension.'' SAM Exclusions contains the names of parties debarred, suspended, or otherwise excluded by agencies, as well as parties declared ineligible under statutory or regulatory authority other than Executive Order 12549. | 2 CFR 200 APPENDIX II (H) |
| None | The U.S. Department of Housing and Urban Development (HUD), Inspectors General, the Comptroller General of the United States, and the Texas Department of Agriculture (TDA), and the City/County, or any of their authorized representatives, shall have access to any documents, papers, or other records of the Contractor which are pertinent to the TxCDBG award, in order to make audits, examinations, excerpts, and transcripts and to closeout the City's/County's TxCDBG contract with TDA. | 2 CFR 200.337 |
| None | Grantees or subgrantees must retain all required records for three years after grantees or subgrantees make final payments and all other pending matters are closed. | 2 CFR 200.334 |
| None | Sec. 176.003. CONFLICTS DISCLOSURE STATEMENT REQUIRED.<br>(a) A local government officer shall file a conflicts disclosure statement with respect to a vendor if:<br>(1) the vendor enters into a contract with the local governmental entity or the local governmental entity is considering entering into a contract with the vendor; and<br>(2) the vendor:<br>(A) has an employment or other business relationship with the local government officer or a family member of the officer that results in the officer or family member receiving taxable income, other than investment income, that exceeds $2,500 during the 12-month period preceding the date that the officer becomes aware that:<br>(i) a contract between the local governmental entity and vendor has been executed; or<br><br>(ii) the local governmental entity is considering entering into a contract with the vendor; | Chapter 176 of the Local Government Code |

| | | |
|---|---|---|
| | (B) has given to the local government officer or a family member of the officer one or more gifts that have an aggregate value of more than $100 in the 12-month period preceding the date the officer becomes aware that:<br>(i) a contract between the local governmental entity and vendor has been executed; or<br>(ii) the local governmental entity is considering entering into a contract with the vendor; or<br><br>(C) has a family relationship with the local government officer.<br><br>(a-1) A local government officer is not required to file a conflicts disclosure statement in relation to a gift accepted by the officer or a family member of the officer if the gift is:<br>(1) a political contribution as defined by Title 15, Election Code; or<br>(2) food accepted as a guest.<br>(a-2) A local government officer is not required to file a conflicts disclosure statement under Subsection (a) if the local governmental entity or vendor described by that subsection is an administrative agency created under Section 791.013, Government Code.<br>(b) A local government officer shall file the conflicts disclosure statement with the records administrator of the local governmental entity not later than 5 p.m. on the seventh business day after the date on which the officer becomes aware of the facts that require the filing of the statement under Subsection (a). | |
| >$10,000 | (*B) All contracts in excess of $10,000 must address termination for cause and for convenience by the non-Federal entity including the manner by which it will be effected and the basis for settlement.*<br><br>***Use the following language for contracts > $ 10,000:***<br><br><u>Termination for Cause</u><br><br>If the Contractor fails to fulfill in a timely and proper manner its obligations under this Agreement, or if the Contractor violates any of the covenants, conditions, agreements, or stipulations of this Agreement, the City/County shall have the right to terminate this Agreement by giving written notice to the Contractor of such termination and specifying the effective date thereof, which shall be at least five days before the effective date of such termination. In the event of termination for cause, all finished or unfinished documents, data, studies, surveys, drawings, maps, models, photographs and reports prepared by the Contractor pursuant to this Agreement shall, at the option of the City/County, be turned over to the City / County and become the property of the City / County. In the event of | 2 CFR 200<br>APPENDIX II(B) |

| | | |
|---|---|---|
| | termination for cause, the Contractor shall be entitled to receive reasonable compensation for any necessary services actually and satisfactorily performed prior to the date of termination.<br><br>Notwithstanding the above, the Contractor shall not be relieved of liability to the City/County for damages sustained by the City/County by virtue of any breach of contract by the Contractor, and the City/County may set-off the damages it incurred as a result of the Contractor's breach of contract from any amounts it might otherwise owe the Contractor.<br><br>Termination for Convenience of the City/County<br><br>City/County may at any time and for any reason terminate Contractor's services and work at City/County's convenience upon providing written notice to the Contractor specifying the extent of termination and the effective date. Upon receipt of such notice, Contractor shall, unless the notice directs otherwise, immediately discontinue the work and placing of orders for materials, facilities and supplies in connection with the performance of this Agreement.<br><br>[Parties should include the manner by which such termination will be effected and the basis for settlement or any other terms and conditions concerning payment upon such termination.] | |
| >$50,000 | *(A) Contracts for more than $50,000 must address administrative, contractual, or legal remedies in instances where contractors violate or breach contract terms, and provide for such sanctions and penalties as appropriate.*<br><br>***Use the following language for contracts > $50,000:***<br><br>Resolution of Program Non-compliance and Disallowed Costs<br>In the event of any dispute, claim, question, or disagreement arising from or relating to this Agreement, or the breach thereof, including determination of responsibility for any costs disallowed as a result of non-compliance with federal, state or TxCDBG program requirements, the parties hereto shall use their best efforts to settle the dispute, claim, question or disagreement. To this effect, the parties shall consult and negotiate with each other in good faith within 30 days of receipt of a written notice of the dispute or invitation to negotiate, and attempt to reach a just and equitable solution satisfactory to both parties. If the matter is not resolved by negotiation within 30 days of receipt of written notice or invitation to negotiate, the parties agree first to try in good faith to settle the matter by mediation administered by the American Arbitration | 2 CFR 200<br>APPENDIX II (A) |

| | | |
|---|---|---|
| | Association under its Commercial Mediation Procedures before resorting to arbitration, litigation, or some other dispute resolution procedure. The parties may enter into a written amendment to this Agreement and choose a mediator that is not affiliated with the American Arbitration Association. The parties shall bear the costs of such mediation equally. *[This section may also provide for the qualifications of the mediator(s), the locale of meetings, time limits, or any other item of concern to the parties.]* If the matter is not resolved through such mediation within 60 days of the initiation of that procedure, either party may proceed to file suit. | |
| ≥$100,000 | (I) Byrd Anti-Lobbying Amendment (31 U.S.C. 1352)— Contractors that apply or bid for an award of $100,000 or more must file the required certification. Each tier certifies to<br>the tier above that it will not and has not used Federal appropriated funds to pay any person or organization for influencing or attempting to influence an officer or employee<br>of any agency, a member of Congress, officer or employee of Congress, or an employee of a member of Congress in connection with obtaining any Federal contract, grant or any other award covered by 31 U.S.C. 1352. Each tier must also disclose any lobbying with non-Federal funds that takes place in connection with obtaining any Federal award.<br>Such disclosures are forwarded from tier to tier up to the non-Federal award. | 2 CFR 200<br>APPENDIX II (I)<br>and<br>24 CFR §570.303 |
| Optional Contract Language for Procurement before Grant Funds Awarded | Payment of the fees [described in ____ section] shall be contingent on CDBG funding. In the event that grant funds are not awarded to the City / County by TDA through the TxCDBG program, this agreement shall be terminated by the City / County. | |

## Additional provisions for administration & engineering contracts associated with construction contracts

*Italics – Explanatory; not contract language*

| THRESHOLD | PROVISION | CITATION |
|---|---|---|
| >$10,000 | *2 CFR 200 Appendix II (C) Equal Employment Opportunity. Except as otherwise provided under 41 CFR Part 60, all contracts that meet the definition of "federally assisted construction contract" in 41 CFR Part 60–1.3 must include the equal opportunity clause provided under 41 CFR 60–1.4(b), in accordance with Executive Order 11246, "Equal Employment Opportunity" (30 FR 12319, 12935, 3 CFR Part, 1964–1965 Comp., p. 339), as amended by Executive* | 41 CFR §60-1.4(b)<br>And<br>2 CFR 200<br>APPENDIX II (C) |

| | | |
|---|---|---|
| | *Order 11375, ''Amending Executive Order 11246 Relating to Equal Employment Opportunity,'' and implementing regulations at 41 CFR part 60, ''Office of Federal Contract Compliance Programs, Equal Employment Opportunity, Department of Labor.''*<br><br>*Therefore, include the following EO clause (not in italics) in construction contracts including construction associated administration and engineering contracts > $10,000:*<br>**§60-1.4(b) Equal opportunity clause.**<br>(b) *Federally assisted construction contracts. Except as otherwise provided, each administering agency shall require the inclusion of the following language as a condition of any grant, contract, loan, insurance, or guarantee involving federally assisted construction which is not exempt from the requirements of the equal opportunity clause:*<br><br>*The applicant hereby agrees that it will incorporate or cause to be incorporated into any contract for construction work, or modification thereof, as defined in the regulations of the Secretary of Labor at 41 CFR chapter 60, which is paid for in whole or in part with funds obtained from the Federal Government or borrowed on the credit of the Federal Government pursuant to a grant, contract, loan insurance, or guarantee, or undertaken pursuant to any Federal program involving such grant, contract, loan, insurance, or guarantee, the following equal opportunity clause:*<br><br>During the performance of this contract, the contractor agrees as follows:<br><br>(1) The contractor will not discriminate against any employee or applicant for employment because of race, color, religion, sex, sexual orientation, gender identity, or national origin. The contractor will take affirmative action to ensure that applicants are employed, and that employees are treated during employment without regard to their race, color, religion, sex, sexual orientation, gender identity, or national origin. Such action shall include, but not be limited to the following: Employment, upgrading, demotion, or transfer; recruitment or recruitment advertising; layoff or termination; rates of pay or other forms of compensation; and selection for training, including apprenticeship. The contractor agrees to post in conspicuous places, available to employees and applicants for employment, notices to be provided setting forth the provisions of this nondiscrimination clause.<br>(2) The contractor will, in all solicitations or advertisements for employees placed by or on behalf of the contractor, state that all qualified applicants will receive considerations for employment without regard to race, color, religion, sex, sexual orientation, gender identity, or national origin. | |

| | | |
|---|---|---|
| | (3) The Contractor will not discourage or in any other manner discriminate against any employee or applicant for employment because such employee or applicant has inquired about, discussed, or disclosed the compensation of the employee or applicant or another employee or applicant. This provision shall not apply to instances in which an employee who has access to the compensation information of other employees or applicants as a part of such employee's essential job functions discloses the compensation of such other employees or applicants to individuals who do not otherwise have access to such information, unless such disclosure is in response to a formal complaint or charge, in furtherance of an investigation, proceeding, hearing, or action, including an investigation conducted by the employer, or is consistent with the contractor's legal duty to furnish information.<br><br>(4) The contractor will send to each labor union or representative of workers with which he has a collective bargaining agreement or other contract or understanding, a notice to be provided advising the said labor union or workers' representatives of the contractor's commitments under this section, and shall post copies of the notice in conspicuous places available to employees and applicants for employment.<br>(5) The contractor will comply with all provisions of Executive Order 11246 of September 24, 1965, and of the rules, regulations, and relevant orders of the Secretary of Labor.<br>(6) The contractor will furnish all information and reports required by Executive Order 11246 of September 24, 1965, and by rules, regulations, and orders of the Secretary of Labor, or pursuant thereto, and will permit access to his books, records, and accounts by the administering agency and the Secretary of Labor for purposes of investigation to ascertain compliance with such rules, regulations, and orders.<br>(7) In the event of the contractor's noncompliance with the nondiscrimination clauses of this contract or with any of the said rules, regulations, or orders, this contract may be canceled, terminated, or suspended in whole or in part and the contractor may be declared ineligible for further Government contracts or federally assisted construction contracts in accordance with procedures authorized in Executive Order 11246 of September 24, 1965, and such other sanctions may be imposed and remedies invoked as provided in Executive Order 11246 of September 24, 1965, or by rule, regulation, or order of the Secretary of Labor, or as otherwise provided by law.<br>(8) The contractor will include the portion of the sentence immediately preceding paragraph (1) and the provisions of paragraphs (1) through (7) in every subcontract or purchase order unless exempted by rules, | |

| | | |
|---|---|---|
| | regulations, or orders of the Secretary of Labor issued pursuant to section 204 of Executive Order 11246 of September 24, 1965, so that such provisions will be binding upon each subcontractor or vendor. The contractor will take such action with respect to any subcontract or purchase order as the administering agency may direct as a means of enforcing such provisions, including sanctions for noncompliance: Provided, however, That in the event a contractor becomes involved in, or is threatened with, litigation with a subcontractor or vendor as a result of such direction by the administering agency the contractor may request the United States to enter into such litigation to protect the interests of the United States.<br><br>The applicant further agrees that it will be bound by the above equal opportunity clause with respect to its own employment practices when it participates in federally assisted construction work: Provided, That if the applicant so participating is a State or local government, the above equal opportunity clause is not applicable to any agency, instrumentality or subdivision of such government which does not participate in work on or under the contract.<br>The applicant agrees that it will assist and cooperate actively with the administering agency and the Secretary of Labor in obtaining the compliance of contractors and subcontractors with the equal opportunity clause and the rules, regulations, and relevant orders of the Secretary of Labor, that it will furnish the administering agency and the Secretary of Labor such information as they may require for the supervision of such compliance, and that it will otherwise assist the administering agency in the discharge of the agency's primary responsibility for securing compliance.<br>The applicant further agrees that it will refrain from entering into any contract or contract modification subject to Executive Order 11246 of September 24, 1965, with a contractor debarred from, or who has not demonstrated eligibility for, Government contracts and federally assisted construction contracts pursuant to the Executive order and will carry out such sanctions and penalties for violation of the equal opportunity clause as may be imposed upon contractors and subcontractors by the administering agency or the Secretary of Labor pursuant to Part II, Subpart D of the Executive order. In addition, the applicant agrees that if it fails or refuses to comply with these undertakings, the administering agency may take any or all of the following actions: Cancel, terminate, or suspend in whole or in part this grant (contract, loan, insurance, guarantee); refrain from extending any further assistance to the applicant under the program with respect to which the failure or refund occurred until satisfactory assurance of future compliance has been received from such applicant; and refer the case to the Department of Justice for appropriate legal proceedings. | |

| | | |
|---|---|---|
| | (c) Subcontracts. Each nonexempt prime contractor or subcontractor shall include the equal opportunity clause in each of its nonexempt subcontracts.<br>(d) Incorporation by reference. The equal opportunity clause may be incorporated by reference in all Government contracts and subcontracts, including Government bills of lading, transportation requests, contracts for deposit of Government funds, and contracts for issuing and paying U.S. savings bonds and notes, and such other contracts and subcontracts as the Deputy Assistant Secretary may designate.<br>(e) Incorporation by operation of the order. By operation of the order, the equal opportunity clause shall be considered to be a part of every contract and subcontract required by the order and the regulations in this part to include such a clause whether or not it is physically incorporated in such contracts and whether or not the contract between the agency and the contractor is written.<br>(f) Adaptation of language. Such necessary changes in language may be made in the equal opportunity clause as shall be appropriate to identify properly the parties and their undertakings.<br>[43 FR 49240, Oct. 20, 1978, as amended at 62 FR 66971, Dec. 22, 1997; 79 FR 72993, Dec. 9, 2014; 80 FR 54934, September 11, 2015] | |
| None | *§75.27 Section 3 contract provision*<br>*Recipients must include language applying Section 3 requirements in any subrecipient agreement or contract for a Section 3 project.:*<br><br>Economic Opportunities for Section 3 Residents and Section 3 Business Concerns.<br>(a) The work to be performed under this Contract is subject to the requirements of section 3 of the Housing and Urban Development (HUD) Act of 1968, as amended, 12 U.S.C. 1701u (section 3). The purpose of section 3 is to ensure that employment and other economic opportunities generated by HUD assistance or HUD-assisted<br>projects covered by section 3, shall, to the greatest extent feasible, be directed to low- and very low-income persons, particularly persons who are recipients of HUD assistance for housing.<br>(b) The parties to this Contract agree to comply with HUD's regulations in 24 CFR part 75, which implement section 3. As evidenced by their execution of this Contract, the parties to this Contract certify that they are under no contractual or other impediment that would prevent them from complying with the part 75 regulations.<br>(c) The Contractor agrees to include this section 3 clause in every subcontract subject to compliance with regulations in 24 CFR part 75, and agrees to take appropriate action, as provided in an applicable provision of the | 24 CFR §75.27 |

| | | |
|---|---|---|
| | subcontract or in this section 3 clause, upon a finding that the subcontractor is in violation of the regulations in 24 CFR part 75. The Contractor will not subcontract with any subcontractor where the Contractor has notice or knowledge that the subcontractor has been found in violation of the regulations in 24 CFR part 75.<br>(d) The Contractor will certify that any vacant employment positions, including training positions, that are filled (1) after the Contractor is selected but before the contract is executed, and (2) with persons other than those to whom the regulations of 24 CFR part 75 require employment opportunities to be directed, were not filled to circumvent the Contractor's obligations under 24 CFR part 75. Minimum expectations of effort to direct employment opportunities to such workers are identified in the TxCDBG Project Implementation Manual.<br>(e) Noncompliance with HUD's regulations in 24 CFR part 75 may result in sanctions, termination of this Contract for default, and debarment or suspension from future HUD assisted contracts. | |

## Construction Contracts

*Italics – Explanatory; not contract language*

| THRESHOLD | PROVISION | CITATION |
|---|---|---|
| >$2,000 for Davis Bacon and Copeland "Anti-Kickback" Act;<br><br>>$100,000 for Contract Work Hours and Safety Standards Act | *HUD 4010 Federal labor standards provisions include:*<br><br>1. *Davis Bacon Act (40 U.S.C. 3141 et seq.) as supplemented by DOL regulations (29 CFR part 5);*<br>2. *Copeland "Anti-Kickback" Act (40 U.S.C. 3145), as supplemented by Department of Labor regulations (29 CFR Part 3); and*<br>3. *Contract Work Hours and Safety Standards Act (40 U.S.C. 3701 et seq.)*<br><br>*See HUD 4010 contract language in Appendix F. Inclusion of this language into the construction contract satisfies contract requirements of the separate acts noted.* | |
| >$2,000<br><br>(Satisfied with inclusion of HUD 4010) | *Compliance with the Davis-Bacon Act (40 U.S.C. 3141 et seq.) as supplemented by Department of Labor regulations (29 CFR part 5) and with the Copeland "Anti-Kickback" Act (18 U.S.C. 874; 40 U.S.C. 3145) as supplemented in Department of Labor regulations (29 CFR part 3):*<br><br>(D) Davis-Bacon Act, as amended (40 U.S.C. 3141-3148). When required by Federal program legislation, all prime construction contracts in excess of $2,000 awarded by non-Federal entities must include a provision for compliance with the Davis-Bacon Act (40 U.S.C. 3141-3144, and 3146-3148) as supplemented by Department of Labor regulations (29 CFR Part 5, "Labor Standards Provisions Applicable to Contracts Covering Federally | 2 CFR 200 APPENDIX II (D) |

| | | |
|---|---|---|
| | Financed and Assisted Construction"). In accordance with the statute, contractors must be required to pay wages to laborers and mechanics at a rate not less than the prevailing wages specified in a wage determination made by the Secretary of Labor. In addition, contractors must be required to pay wages not less than once a week. The non-Federal entity must place a copy of the current prevailing wage determination issued by the Department of Labor in each solicitation. The decision to award a contract or subcontract must be conditioned upon the acceptance of the wage determination. The non-Federal entity must report all suspected or reported violations to the Federal awarding agency. The contracts must also include a provision for compliance with the Copeland "Anti-Kickback" Act (40 U.S.C. 3145), as supplemented by Department of Labor regulations (29 CFR Part 3, "Contractors and Subcontractors on Public Building or Public Work Financed in Whole or in Part by Loans or Grants from the United States"). The Act provides that each contractor or subrecipient must be prohibited from inducing, by any means, any person employed in the construction, completion, or repair of public work, to give up any part of the compensation to which he or she is otherwise entitled. The non-Federal entity must report all suspected or reported violations to the Federal awarding agency. | |
| >$10,000 | *2 CFR 200 Appendix II (C) Equal Employment Opportunity. Except as otherwise provided under 41 CFR Part 60, all contracts that meet the definition of "federally assisted construction contract" in 41 CFR Part 60–1.3 must include the equal opportunity clause provided under 41 CFR 60–1.4(b), in accordance with Executive Order 11246, "Equal Employment Opportunity" (30 FR 12319, 12935, 3 CFR Part, 1964–1965 Comp., p. 339), as amended by Executive Order 11375, "Amending Executive Order 11246 Relating to Equal Employment Opportunity," and implementing regulations at 41 CFR part 60, "Office of Federal Contract Compliance Programs, Equal Employment Opportunity, Department of Labor."*<br><br>*Therefore, include the following EO clause (not in italics) in construction contracts including construction associated administration and engineering contracts > $10,000:*<br><br>**§60-1.4(b) Equal opportunity clause.**<br>(b) *Federally assisted construction contracts. Except as otherwise provided, each administering agency shall require the inclusion of the following language as a condition of any grant, contract, loan, insurance, or guarantee involving federally assisted construction which* | 41 CFR §60-1.4(b)<br>And<br>2 CFR 200<br>APPENDIX II (C) |

| | | |
|---|---|---|
| | *is not exempt from the requirements of the equal opportunity clause:*<br><br>*The applicant hereby agrees that it will incorporate or cause to be incorporated into any contract for construction work, or modification thereof, as defined in the regulations of the Secretary of Labor at 41 CFR chapter 60, which is paid for in whole or in part with funds obtained from the Federal Government or borrowed on the credit of the Federal Government pursuant to a grant, contract, loan insurance, or guarantee, or undertaken pursuant to any Federal program involving such grant, contract, loan, insurance, or guarantee, the following equal opportunity clause:*<br><br>During the performance of this contract, the contractor agrees as follows:<br><br>(1) The contractor will not discriminate against any employee or applicant for employment because of race, color, religion, sex, sexual orientation, gender identity, or national origin. The contractor will take affirmative action to ensure that applicants are employed, and that employees are treated during employment without regard to their race, color, religion, sex, sexual orientation, gender identity, or national origin. Such action shall include, but not be limited to the following: Employment, upgrading, demotion, or transfer; recruitment or recruitment advertising; layoff or termination; rates of pay or other forms of compensation; and selection for training, including apprenticeship. The contractor agrees to post in conspicuous places, available to employees and applicants for employment, notices to be provided setting forth the provisions of this nondiscrimination clause.<br>(2) The contractor will, in all solicitations or advertisements for employees placed by or on behalf of the contractor, state that all qualified applicants will receive considerations for employment without regard to race, color, religion, sex, sexual orientation, gender identity, or national origin.<br>(3) The Contractor will not discourage or in any other manner discriminate against any employee or applicant for employment because such employee or applicant has inquired about, discussed, or disclosed the compensation of the employee or applicant or another employee or applicant. This provision shall not apply to instances in which an employee who has access to the compensation information of other employees or applicants as a part of such employee's essential job functions discloses the compensation of such other employees or applicants to individuals who do not otherwise have access to such information, unless such disclosure is in response to a formal complaint or charge, in furtherance of an | |

| | | |
|---|---|---|
| | investigation, proceeding, hearing, or action, including an investigation conducted by the employer, or is consistent with the contractor's legal duty to furnish information.<br>(4) The contractor will send to each labor union or representative of workers with which he has a collective bargaining agreement or other contract or understanding, a notice to be provided advising the said labor union or workers' representatives of the contractor's commitments under this section, and shall post copies of the notice in conspicuous places available to employees and applicants for employment.<br>(5) The contractor will comply with all provisions of Executive Order 11246 of September 24, 1965, and of the rules, regulations, and relevant orders of the Secretary of Labor.<br>(6) The contractor will furnish all information and reports required by Executive Order 11246 of September 24, 1965, and by rules, regulations, and orders of the Secretary of Labor, or pursuant thereto, and will permit access to his books, records, and accounts by the administering agency and the Secretary of Labor for purposes of investigation to ascertain compliance with such rules, regulations, and orders.<br>(7) In the event of the contractor's noncompliance with the nondiscrimination clauses of this contract or with any of the said rules, regulations, or orders, this contract may be canceled, terminated, or suspended in whole or in part and the contractor may be declared ineligible for further Government contracts or federally assisted construction contracts in accordance with procedures authorized in Executive Order 11246 of September 24, 1965, and such other sanctions may be imposed and remedies invoked as provided in Executive Order 11246 of September 24, 1965, or by rule, regulation, or order of the Secretary of Labor, or as otherwise provided by law.<br>(8) The contractor will include the portion of the sentence immediately preceding paragraph (1) and the provisions of paragraphs (1) through (7) in every subcontract or purchase order unless exempted by rules, regulations, or orders of the Secretary of Labor issued pursuant to section 204 of Executive Order 11246 of September 24, 1965, so that such provisions will be binding upon each subcontractor or vendor. The contractor will take such action with respect to any subcontract or purchase order as the administering agency may direct as a means of enforcing such provisions, including sanctions for noncompliance: Provided, however, That in the event a contractor becomes involved in, or is threatened with, litigation with a subcontractor or vendor as a result of such direction by the administering agency the contractor may request the United States to enter into such litigation to protect the interests of the United States. | |

| | | |
|---|---|---|
| | The applicant further agrees that it will be bound by the above equal opportunity clause with respect to its own employment practices when it participates in federally assisted construction work: Provided, That if the applicant so participating is a State or local government, the above equal opportunity clause is not applicable to any agency, instrumentality or subdivision of such government which does not participate in work on or under the contract.<br>The applicant agrees that it will assist and cooperate actively with the administering agency and the Secretary of Labor in obtaining the compliance of contractors and subcontractors with the equal opportunity clause and the rules, regulations, and relevant orders of the Secretary of Labor, that it will furnish the administering agency and the Secretary of Labor such information as they may require for the supervision of such compliance, and that it will otherwise assist the administering agency in the discharge of the agency's primary responsibility for securing compliance.<br>The applicant further agrees that it will refrain from entering into any contract or contract modification subject to Executive Order 11246 of September 24, 1965, with a contractor debarred from, or who has not demonstrated eligibility for, Government contracts and federally assisted construction contracts pursuant to the Executive order and will carry out such sanctions and penalties for violation of the equal opportunity clause as may be imposed upon contractors and subcontractors by the administering agency or the Secretary of Labor pursuant to Part II, Subpart D of the Executive order. In addition, the applicant agrees that if it fails or refuses to comply with these undertakings, the administering agency may take any or all of the following actions: Cancel, terminate, or suspend in whole or in part this grant (contract, loan, insurance, guarantee); refrain from extending any further assistance to the applicant under the program with respect to which the failure or refund occurred until satisfactory assurance of future compliance has been received from such applicant; and refer the case to the Department of Justice for appropriate legal proceedings.<br>(c) Subcontracts. Each nonexempt prime contractor or subcontractor shall include the equal opportunity clause in each of its nonexempt subcontracts.<br>(d) Incorporation by reference. The equal opportunity clause may be incorporated by reference in all Government contracts and subcontracts, including Government bills of lading, transportation requests, contracts for deposit of Government funds, and contracts for issuing and paying U.S. savings bonds and notes, and such other contracts and subcontracts as the Deputy Assistant Secretary may designate.<br>(e) Incorporation by operation of the order. By operation of the order, the equal opportunity clause shall | |

| | | |
|---|---|---|
| | be considered to be a part of every contract and subcontract required by the order and the regulations in this part to include such a clause whether or not it is physically incorporated in such contracts and whether or not the contract between the agency and the contractor is written.<br>(f) Adaptation of language. Such necessary changes in language may be made in the equal opportunity clause as shall be appropriate to identify properly the parties and their undertakings.<br>[43 FR 49240, Oct. 20, 1978, as amended at 62 FR 66971, Dec. 22, 1997; 79 FR 72993, Dec. 9, 2014; 80 FR 54934, September 11, 2015] | |
| >$100,000<br><br>(Satisfied with inclusion of HUD 4010) | (E) Contract Work Hours and Safety Standards Act (40 U.S.C. 3701–3708). Where applicable, all contracts awarded by the non-Federal entity in excess of $100,000 that involve the employment of mechanics or laborers must include a provision for compliance with 40 U.S.C. 3702 and 3704, as supplemented by Department of Labor regulations (29 CFR Part 5). Under 40 U.S.C. 3702 of the Act, each contractor must be required to compute the wages of every mechanic and laborer on the basis of a standard work week of 40 hours. Work in excess of the standard work week is permissible provided that the worker is compensated at a rate of not less than one and a half times the basic rate of pay for all hours worked in excess of 40 hours in the work week. The requirements of 40 U.S.C. 3704 are applicable to construction work and provide that no laborer or mechanic must be required to work in surroundings or under working conditions which are unsanitary, hazardous or dangerous. These requirements<br>do not apply to the purchases of supplies or materials or articles ordinarily available on the open market, or contracts for transportation or transmission of intelligence. | 2 CFR 200<br>APPENDIX II (E) |
| None | Economic Opportunities for Section 3 Residents and Section 3 Business Concerns.<br>(a) The work to be performed under this Contract is subject to the requirements of section 3 of the Housing and Urban Development (HUD) Act of 1968, as amended, 12 U.S.C. 1701u (section 3). The purpose of section 3 is to ensure that employment and other economic opportunities generated by HUD assistance or HUD-assisted projects covered by section 3, shall, to the greatest extent feasible, be directed to low- and very low-income persons, particularly persons who are recipients of HUD assistance for housing.<br>(b) The parties to this Contract agree to comply with HUD's regulations in 24 CFR part 75, which implement section 3. As evidenced by their execution of this Contract, the parties to this Contract certify that they are under no | 24 CFR §75.27 |

| | | |
|---|---|---|
| | contractual or other impediment that would prevent them from complying with the part 75 regulations.<br>(c) The Contractor agrees to include this section 3 clause in every subcontract subject to compliance with regulations in 24 CFR part 75, and agrees to take appropriate action, as provided in an applicable provision of the subcontract or in this section 3 clause, upon a finding that the subcontractor is in violation of the regulations in 24 CFR part 75. The Contractor will not subcontract with any subcontractor where the Contractor has notice or knowledge that the subcontractor has been found in violation of the regulations in 24 CFR part 75.<br>(d) The Contractor will certify that any vacant employment positions, including training positions, that are filled (1) after the Contractor is selected but before the contract is executed, and (2) with persons other than those to whom the regulations of 24 CFR part 75 require employment opportunities to be directed, were not filled to circumvent the Contractor's obligations under 24 CFR part 75. Minimum expectations of effort to direct employment opportunities to such workers are identified in the TxCDBG Project Implementation Manual.<br>(e) Noncompliance with HUD's regulations in 24 CFR part 75 may result in sanctions, termination of this Contract for default, and debarment or suspension from future HUD assisted contracts. | |
| >$150,000 | (G) Clean Air Act (42 U.S.C. 7401–7671q.) and the Federal Water Pollution Control Act (33 U.S.C. 1251–1387), as amended—Contracts and subgrants of amounts in excess of $150,000 must contain a provision that requires the non-Federal award to agree to comply with all applicable standards, orders or regulations issued pursuant to the Clean Air Act (42 U.S.C. 7401–7671q) and the Federal Water Pollution Control Act as amended (33 U.S.C. 1251–1387). Violations must be reported to the Federal awarding agency and the Regional Office of the Environmental Protection Agency (EPA). | 2 CFR 200 APPENDIX II (G) |
| No Threshold | § 200.322 Domestic preferences for procurements.<br>(a) As appropriate and to the extent consistent with lawand to the greatest extent practicable under a Federal award, provide a preference for the purchase, acquisition, or use of goods, products, or materials produced in the United States (including but not limited to iron, aluminum, steel, cement, and other manufactured products). The requirements of this section must be included in all subawards including all contracts and purchase orders for work or products under this award.<br>(b) For purposes of this section:<br>(1) “Produced in the United States” means, for iron and steel products, that all manufacturing processes, from the | 2 CFR §200.322 |

| | | |
|---|---|---|
| | initial melting stage through the application of coatings, occurred in the United States.<br>(2) “Manufactured products” means items and construction materials composed in whole or in part of non-ferrous metals such as aluminum; plastics and polymer-based products such as polyvinyl chloride pipe; aggregates such as concrete; glass, including optical fiber; and lumber. | |

# X-M

# CERTIFICATE OF INTERESTED PARTIES FORM 1295 AND INSTRUCTIONS

# CERTIFICATE OF INTERESTED PARTIES FORM 1295 AND INSTRUCTIONS

DISCLOSURE OF INTERESTED PARTY FORM:
NEW OBLIGATION OF THE CITY/COUNTY TO RECEIVE INFORMATION FROM WINNING BIDDER

Effective January 1, 2016, pursuant to Texas Government Code, Section 2252.908 (the "Interested Party Disclosure Act"), the City/County may not award a contract to a bidder unless the bidder submits a Certificate of Interested Parties Form 1295 (the "Disclosure Form") to the City/County as prescribed by the Texas Ethics Commission ("TEC"). In the event that the bidder's bid for the  is the best bid received, the City/County or its consultant, will promptly notify the bidder. That notification will serve as the conditional verbal acceptance of the bid. Upon this acceptance, the winning bidder must promptly, not later than TIME (CST) on the DATE, file the materials described below.

PROCESS FOR COMPLETING THE DISCLOSURE FORM[1]

The Disclosure Form can be found at https://www.ethics.state.tx.us/forms/1295.pdf, and reference should be made to the following information in order to complete it:
(a) item 2 – Name of City/County (" , Texas")
(b) item 3 – the identification number ("TxCDBG "), and
(c) item 3 – description of the goods or services assigned to this contract by the City ("Construction Services for )

You must:

1) complete the Disclosure Form electronically at the TEC's "electronic portal", and
2) print, sign and deliver a copy (scanned and emailed is fine) of the Disclosure Form and Certification of Filing that is generated by the TEC's "electronic portal."

[1] A completed Form 1295 is not required for:

- a sponsored research contract of an institution of higher education;
- an interagency contract of a state agency or an institution of higher education;
- a contract related to health and human services if:
  - the value of the contract cannot be determined at the time the contract is executed; and
  - any qualified vendor is eligible for the contract;
- a contract with a publicly traded business entity, including a wholly owned subsidiary of the business entity;
- a contract with an electric utility, as that term is defined by Section 31.002, Utilities Code; or
- a contract with a gas utility, as that term is defined by Section 121.001, Utilities Code.

The following link will take you to the electronic portal for filing:
https://www.ethics.state.tx.us/TECCertInt/pages/login/certLogin.jsf

Also, a detailed instruction video may be found here:
https://www.ethics.state.tx.us/whatsnew/elf_info_form1295.htm

Neither the City/County nor its consultants have the ability to verify the information included in a Disclosure Form, and neither have an obligation nor undertake responsibility for advising any business entity with respect to the proper completion of the Disclosure Form.

# CERTIFICATE OF INTERESTED PARTIES

FORM 1295

Complete Nos. 1 - 4 and 6 if there are interested parties.
Complete Nos. 1, 2, 3, 5, and 6 if there are no interested parties.

**OFFICE USE ONLY**

1 Name of business entity filing form, and the city, state and country of the business entity's place of business.

2 Name of governmental entity or state agency that is a party to the contract for which the form is being filed.

3 Provide the identification number used by the governmental entity or state agency to track or identify the contract, and provide a description of the services, goods, or other property to be provided under the contract.

| 4 Name of Interested Party | City, State, Country (place of business) | Nature of Interest (check applicable) | |
|---|---|---|---|
| | | Controlling | Intermediary |
| | | | |
| | | | |
| | | | |
| | | | |
| | | | |
| | | | |
| | | | |

5 Check only if there is NO Interested Party. ☐

6 UNSWORN DECLARATION

My name is _____, and my date of birth is _____.

My address is _____, _____, _____, _____, _____.
(street) (city) (state) (zip code) (country)

I declare under penalty of perjury that the foregoing is true and correct.

Executed in _____ County, State of _____ , on the _____ day of _____, 20_____.
(month) (year)

_____
Signature of authorized agent of contracting business entity
(Declarant)

**ADD ADDITIONAL PAGES AS NECESSARY**

Must file online at www.ethics.state.tx.us/File

# X-N

# CONFLICT OF INTEREST QUESTIONNAIRE

# CONFLICT OF INTEREST QUESTIONNAIRE

## For vendor doing business with local governmental entity

**FORM CIQ**

**This questionnaire reflects changes made to the law by H.B. 23, 84th Leg., Regular Session.**

This questionnaire is being filed in accordance with Chapter 176, Local Government Code, by a vendor who has a business relationship as defined by Section 176.001(1-a) with a local governmental entity and the vendor meets requirements under Section 176.006(a).

By law this questionnaire must be filed with the records administrator of the local governmental entity not later than the 7th business day after the date the vendor becomes aware of facts that require the statement to be filed. *See* Section 176.006(a-1), Local Government Code.

A vendor commits an offense if the vendor knowingly violates Section 176.006, Local Government Code. An offense under this section is a misdemeanor.

**OFFICE USE ONLY**

Date Received

1 **Name of vendor who has a business relationship with local governmental entity.**

2 ☐ **Check this box if you are filing an update to a previously filed questionnaire.** (The law requires that you file an updated completed questionnaire with the appropriate filing authority not later than the 7th business day after the date on which you became aware that the originally filed questionnaire was incomplete or inaccurate.)

3 **Name of local government officer about whom the information is being disclosed.**

_____
Name of Officer

4 **Describe each employment or other business relationship with the local government officer, or a family member of the officer, as described by Section 176.003(a)(2)(A). Also describe any family relationship with the local government officer. Complete subparts A and B for each employment or business relationship described. Attach additional pages to this Form CIQ as necessary.**

A. Is the local government officer or a family member of the officer receiving or likely to receive taxable income, other than investment income, from the vendor?

☐ Yes ☐ No

B. Is the vendor receiving or likely to receive taxable income, other than investment income, from or at the direction of the local government officer or a family member of the officer AND the taxable income is not received from the local governmental entity?

☐ Yes ☐ No

5 **Describe each employment or business relationship that the vendor named in Section 1 maintains with a corporation or other business entity with respect to which the local government officer serves as an officer or director, or holds an ownership interest of one percent or more.**

6 ☐ Check this box if the vendor has given the local government officer or a family member of the officer one or more gifts as described in Section 176.003(a)(2)(B), excluding gifts described in Section 176.003(a-1).

7

_____ _____
Signature of vendor doing business with the governmental entity Date

# X-O

# CONTRACTOR'S LOCAL OPPORTUNITY PLAN

# Contractor's Local Opportunity Plan

_(name of company)_____ agrees to implement the following specific affirmative action steps directed at increasing the utilization of lower income residents and businesses within the (City/County) of _____.

i) To ascertain from the City/County's CDBG program official the exact boundaries of the project area and where advantageous, seek the assistance of local officials in preparing and implementing the affirmative action plan.

ii) To attempt to recruit from within the city the necessary number of lower income residents through: local advertising media, signs placed at the proposed site for the project, and community organizations and public or private institutions operating within and servicing the project area such as Service Employment and Redevelopment (SER), Opportunities Industrialization Center (OIC), Urban League, Concentrated Employment Program, Hometown Plan, or the U.S. Employment Service.

iii) To maintain a list of all lower income residents who have applied either on their own or on referral from any source, and to employ such persons, if otherwise eligible and if a vacancy exists.

iv) To insert this plan in all bid documents and to require all bidders on subcontracts to submit an affirmative action plan including utilization goals and the specific steps planned to accomplish these goals.

v) To ensure that subcontracts (greater than $10,000), which are typically let on a negotiated rather than a bid basis in areas other than the covered project area, are also let on a negotiated basis, whenever feasible, in a covered project area.

vi) To formally contact unions, subcontractors, and trade associations to secure their cooperation in this effort.

vii) To ensure that all appropriate project area business concerns are notified of pending sub-contractual opportunities.

viii) To maintain records, including copies of correspondence, memoranda, etc., which document that all of the above affirmative action steps have been taken.

ix) To appoint or recruit an executive official of the company or agency as Equal Opportunity Officer to coordinate the implementation of this plan.

x) To maintain records concerning the amount and number of contracts, subcontracts, and purchases which contribute to objectives.

xi) To maintain records of all projected work force needs for all phases of the project by occupation, trade, skill level, and number of positions and to update these projections based on the extent to which hiring meets these Local Opportunity objectives.

As officers and representatives of (name of company), we the undersigned have read and fully agree to this Plan and the Grantee's Section 3 Plan and become a party to the full implementation of the program and its provisions.

_____
Signature

_____
Printed Name

_____
Title

_____
Date

# X-P

# CERTIFICATE OF LIABILITY INSURANCE

# Certificate of Liability Insurance

[INSERT Copy of Contractor's Liability Insurance]

# X-Q

# SECTION 504 CERTIFICATION

# Section 504 Certification

POLICY OF NONDISCRIMINATION ON THE BASIS OF DISABILITY

The _____ does not discriminate on the basis of disability status in the admission or access to, or treatment or employment in, its federally assisted programs or activities.

(Name) _____

(Address) _____

_____
City State Zip

Telephone Number ( ) _____ - _____ Voice
( ) _____ - _____ TDD

_____has been designated to coordinate compliance with the nondiscrimination requirements contained in the Department of Housing and Urban Development's (HUD) regulations implementing Section 504 (24 CFR Part 8. dated June 2, 1988).

# X-R

# CERTIFICATE OF CONSTRUCTION COMPLETION (COCC)

# Certificate of Construction Completion (COCC)

(Submit one for each Prime Construction Contract)

Grant Recipient: _____ TxCDBG Contract No: _____

**This is to certify** that all construction work has been completed and a final inspection of the project described below was conducted on the ___ day of_____,_____. Contract was entered into on the _____ _____ day of _____, _____ between the city/county of _____ and _____ _____ for the construction of _____.

This is to further certify that:

1. The work has been completed in accordance with the plans and specifications and all amendments, change orders and supplemental agreements thereto.

2. The sum of $ _____, has been deducted from the final payment to the Contractor in accordance with any contract liquidated damages requirements, separate from any liquidated damages resulting from Davis-Bacon compliance.

3. All programmatic requirements have been met, all claims and disputes have been settled, all warranties have been received, and all liens have been released.

4. The Contractor has presented on behalf of itself and its sureties, satisfactory evidence that he or she will repair, replace and rectify any faulty workmanship and/or materials discovered in the work within a period of 12 months from this date, as provided in the Contract.

5. All bills for materials, apparatus, fixtures, machinery, labor, and equipment used in connection with the construction of this project have been fully paid.

6.

| | |
|---|---|
| Amount of Original Contract | $_____ |
| Cumulative Change Orders | $_____ |
| Final Amount of Contract | $_____ |
| Less Previous Payments | $_____ |
| Less Deductions (from #2 above) | $_____ |
| FINAL PAYMENT (Balance) | $_____ |

7. The Final Payment above is now due and payable.

Certified by the following Engineer, Contractor, and Chief Elected Official/Designee:

| | | |
|---|---|---|
| _____ | _____ | _____ |
| Engineer Signature | Chief Elected Official Signature | Contractor Signature |
| _____ | _____ | _____ |
| Title | Title | Title |
| _____ | _____ | _____ |
| Firm | City / County | Contractor |

# X-S

# FINAL PAYMENT AFFIDAVIT

# Contractor's Final Payment Affidavit

| | | | | |
|---|---|---|---|---|
| Locality: | | | TX CDBG No: | |
| | | | | |
| Contractor: | | | Date: | |

**BEFORE ME, THE UNDERSIGNED AUTHORITY**, on this day personally appeared _____ _____, who being duly sworn, on oath, says that he is a duly authorized representative of _____ _____; Contractor, and that all terms of the Contract for the completion of certain public works described as _____; City/County of _____ _____, Texas have been satisfactorily completed and that ALL sums of money for payrolls, bills for material and equipment, and other indebtedness connected with the Work for the Owner or its property might in any way be responsible to the best of my knowledge and belief, have been paid or will be paid or otherwise satisfied within thirty days after receipt of final payment from the Owner, or within the period of time required by Article 601f, Vernon's Civil Statutes. Payments not made in full at the time of this affidavit are listed below.

| | | | | | |
|---|---|---|---|---|---|
| FINAL PAYMENTS pending as of this date hereof are: | | None Pending | | | As Listed Below |

| Individual or Co. Name | Mailing Address | Amount Owed |
|---|---|---|
| | | |
| | | |
| | | |
| | | |
| | | |
| | | |

| |
|---|
| |
| Signature |
| |
| Title |

Affidavit must be signed by an individual owner or partner in partnership, or by a person authorized by by-laws or Board of Directors to sign for a corporation. If Contractor is a joint venture or partnership of individuals, either may sign, but if a joint venture in which a corporation is a party, separate affidavits must be executed by each corporation and by each individual owner or partnership. In the event subcontractors, laborers, or material suppliers have not been paid in full, the Contractor shall list here on the amount owed and the name and address of each subcontractor, laborer, or material supplier to whom such payment is owed.

Sworn and Subscribed before me this, the _____ day of _____, 20___.

(SEAL)

Notary Public in and for _____ County, Texas

# X-T

# ENVIRONMENTAL MITIGATION MEASURES

# Project-Specific Environmental Mitigation Measures

(If Applicable)

**[GrantWorks to Insert prior to invitation to bid]**

# X-U

# SAMPLE CHANGE ORDER FORM

# Construction Contract Change Order

**A505**

Grant Recipient: _____ Select: ☒ City ☐ County

Contract No.: _____ Change Order No.: ____ Region: _____

| Contractor: | Engineer: |
|---|---|
| (Name and Address) | (Name and Address) |

Select Change Order Type(s): ☒ Change to Existing Line Items ☒ New Items Requested ☒ Change in Contract Duration

Grant recipient is requesting Texas Department of Agriculture review to determine eligibility of change order expenses.

**Changes to Existing Line Items (Items from original bid or added in previous change order ONLY)**

| Bid Item # | Item Description | Original Qty. | Proposed Qty. | UOM | Unit Price | Δ Qty. | Change in Contract Price | + |
|---|---|---|---|---|---|---|---|---|
| | | | | | | | | - |
| | | | 0 | | $0.00 | 0 | $0.00 | - |
| | | | 0 | | $0.00 | 0 | $0.00 | - |
| | | | 0 | | $0.00 | 0 | $0.00 | - |
| | | | 0 | | $0.00 | 0 | $0.00 | - |
| | | | 0 | | $0.00 | 0 | $0.00 | - |
| | | | | | | Contract Change Sub-Total: | $0.00 | |

**New Items Requested (Items WITHOUT a unit price in the original bid)**

Provide explanation below (attach separate documentation as appropriate). The Grant Recipient must demonstrate competitive pricing for new items.

| Bid Item # | Item Description | Original Qty. | Proposed Qty. | UOM | Unit Price | Δ Qty. | Change in Contract Price | + |
|---|---|---|---|---|---|---|---|---|
| | | | | | | | | - |
| | | 0 | 0 | | $0.00 | 0 | $0.00 | - |
| | | 0 | 0 | | $0.00 | 0 | $0.00 | - |
| | | 0 | 0 | | $0.00 | 0 | $0.00 | - |
| | | 0 | 0 | | $0.00 | 0 | $0.00 | - |
| | | 0 | 0 | | $0.00 | 0 | $0.00 | - |
| | | | | | | Contract New Item Sub-Total: | $0.00 | |

**Change in Contract Duration**

Provide explanation below (attach separate documentation as necessary).

| | |
|---|---|
| Original Contract End Date: | |
| Net change of previous Change Orders (days): | |
| Increase/Decrease of this Change Order (days): | |
| Change Order Contract End Date | |

This form required as of September 1, 2020.
All previous versions no longer valid.

| **Justification for Change** | | | |
|---|---|---|---|
| | Increase | Decrease | No Change |
| 1. Effect of this change on scope of work: | ☐ | ☐ | ☐ |
| 2. Effect on operation and maintenance costs: | ☐ | ☐ | ☐ |
| | Yes | No | Not Applicable |
| 3. Will this Change Order change the number of beneficiaries or TxCDBG contract Performance Statement Exhibit A? | ☐ | ☐ | ☐ |
| 4. Has this change created new circumstances or environmental conditions which may affect the project's impact, such as concealed or unexpected conditions discovered during actual construction? | ☐ | ☐ | ☐ |
| 5. Is the TCEQ clearance still valid? | ☐ | ☐ | ☐ |
| 6. Are other TxCDBG contractual special condition clearances still valid? | ☐ | ☐ | ☐ |
| 7. If new items are included that were not included in the competitive bid, have the prices been determined to be reasonable? | ☐ | ☐ | ☐ |

| | |
|---|---|
| | |
| Director Signature (optional) | Date |

# XI

# TECHNICAL SPECIFICATIONS

**LJA Project No. E019-1014**

## ITEM 1400

## MEASUREMENT AND PAYMENT

MEASUREMENT AND PAYMENT: It is the intent of the Proposal and of the General and Supplementary Conditions that the total bid, as submitted, shall cover all work required by these Contract Documents. All costs in connection with the work, including furnishing of all materials, appliances, equipment, chemicals, supplies and appurtenances; providing all construction equipment and tools; and performing all necessary labor to fully complete the work shall be included in the unit prices in the Proposal. No item of work that is required by the Contract Documents for the proper and successful completion of the Contract will be paid for outside of or in addition to the prices submitted to the Proposal. **All work not specifically set forth in the Proposal as a pay item shall be considered a subsidiary obligation of the Contractor and all costs in connection therewith shall be included in the prices named in the Proposal.**

The method of measurement and basis of payment shall be as stipulated in the following subparagraphs:

### BASE BID ITEMS

1. Driveway Excavation (Minimum of 7-Inches); Bid Item 1:

   Measurement shall be "Per Square Yard". The unit price shall be full compensation for furnishing all labor, tools, equipment, supplies, and incidentals necessary to complete the work, this shall include the removal of concrete roadway, gravel, asphalt, and concrete driveways including excavating onsite material from roadway to establish a finished grade, and reach compaction to 95% by Standard Procter Density. No material is to be placed within city limits without approval nor within the flood plain.

2. Embankment for Fill Purposes, Bid Item 2:

   Measurement shall be "Per Cubic Yard" of in-place material. The unit price shall be full compensation for materials, labor, and appurtenances for delivery and installation of embankment as required to raise and establish a finished grade as called out on plans, and reach compaction of 95% standard proctor density, as directed by the Owner's Representative.

3. Lime for 8-Inch Stabilized Sub-Grade (6% by Dry Weight); Bid Item 3:

   Measurement shall be "Per Ton". The unit price shall be full compensation for furnishing all labor, tools, equipment, supplies, and incidentals necessary to complete the work, including supplying and placing lime to be utilized during the subgrade operation described in Bid Item 4.

4. 8-Inch Stabilized Sub-Grade (Manipulation); Bid Item 4:

   Measurement shall be “Per Square Yard”. The unit price shall be full compensation for furnishing all labor, tools, equipment, supplies, and incidentals necessary to complete the work, including salvaging and reshaping the existing base material and subgrade to obtain the required alignment and grade of the proposed pavement; spreading, blading and shaping of any material brought to the project from a stockpile; spreading and blading of the lime/flyash to obtain a uniform application; lime/flyash stabilization; mixing, sprinkling, blading, shaping and rolling of the base material and subgrade to obtain the required Standard Proctor Density and all manipulations, labor, tools, equipment necessary to complete the work.

5. 6-Inch Reinforced Concrete Pavement for Driveways (5.5 Sacks per Cubic Yard); Bid Item 5:

   Measurement shall be “Per Square Yard”. The unit price shall be full compensation for shaping and fine grading the roadbed, including furnishing and applying all water required; for furnishing, loading and all freight and royalty involved; for mixing, placing, finishing and curing all concrete mix; for furnishing all materials for and placing longitudinal, warping, expansion, sawed control and contraction joints , and load transmission units, and joint filler material in proper position; for coating steel bars where required by plans, for furnishing and placing all reinforcing steel; and for all manipulations, labor, equipment, appliances, tools, traffic provisions and incidentals necessary to complete the work.

6. 36-Inch Reinforced Concrete Pipe, ASTM C-76, Class III; Bid Item 6:

   Measurement shall be “Per Linear Foot”. Payment shall be full compensation for supplying all materials to deliver the 36-Inch reinforced concrete pipe, dewatering, bypass pumping, labor to place reinforced concrete pipe as directed by the engineer, and tv inspection post construction.

7. 24-Inch Reinforced Concrete Pipe, ASTM C-76, Class III; Bid Item 7:

   Measurement shall be “Per Linear Foot”. Payment shall be full compensation for supplying all materials to deliver the 24-Inch reinforced concrete pipe, dewatering, bypass pumping, labor to place reinforced concrete pipe as directed by the engineer, and tv inspection post construction.

8. 24-Inch Reinforced Concrete Arch Pipe, ASTM C-76, Class III; Bid Item 8:

   Measurement shall be “Per Linear Foot”. Payment shall be full compensation for supplying all materials to deliver the 24-Inch reinforced concrete arch pipe, dewatering, bypass pumping, labor to place reinforced concrete pipe as directed by the engineer, and tv inspection post construction.

9. Junction Box; Bid Items 9, 10, 11, and 12:

   Measurement shall be “Per Each.” The unit price shall be full compensation for layout, materials, installation of materials necessary, excavation, disposal of waste, seal slabs, access inlet with solid cover, forming, steel placement, placement of concrete, trench safety, connections to all existing and proposal storm sewer, and appurtenances as shown on the Plans and/or Details, embedment and backfill, finish grading, dewatering, clean-up, and all appurtenances necessary to complete the work, complete in place.

10. Remove Existing Culverts (36-Inch or Less); Bid Item 13:

    Measurement shall be “Per Linear Foot”. Payment shall be full compensation for supplying all materials to remove existing culvert, and labor to place haul offsite as directed by the engineer.

11. Type “A” Inlet; Bid Item 14:

    Measurement shall be “Per Each”. The unit price shall be full compensation for furnishing and installation of type “A” inlet including excavation and embedment as required, backfilling, finish grading, dewatering, bypass pumping, ditch grading to drain, clean-up and all appurtenances including concrete collars per detail, and work required for the complete placement of proposed type “A” inlet.

12. Regrade Existing Ditch to Flowline; Bid Item 15:

    Measurement shall be “Per Linear Foot”. The unit price shall be full compensation for regrading the existing ditch to the proposed flowline specified in the plans, including excavation and embedment as required, backfilling, finish grading, ditch grading to drain and clean-up.

13. Traffic Control Plan; Bid Item 16:

    Measurement is to be “Per Lump Sum”. Payment to be full compensation for all necessary permits for flagmen necessary to assist in the unloading of construction materials (when and if necessary). The cost shall also include the installation, maintenance, and removal of all signs, temporary barricades along driveways, flagmen along adjoining streets during construction activities, along with all other appurtenances necessary.

14. Trench Safety System; Bid Item 17:

    Measurement shall be “Per Linear Foot” along the centerline of the pipe without deductions for manholes, valves, or fittings from start to line terminus for gravity and/or pressure systems for all depths in excess of 5 feet. The unit price shall be full compensation for trench safety system, material construction, maintenance and inspection of any shoring related equipment

15. Turf Establishment, Full sodding; Bid Item 18:

    Measurement shall be “Per Square Yard”. Payment is to be full compensation for the establishment of solid sodding in accordance with the Specifications in locations designated by the Plans or as directed by the Engineer. Sod replacement is for areas that are necessary to disrupt and will be the responsibility of the contractor to replace where they have disrupted if the engineer deems it to be necessary, complete in place.

16. SWPPP, Area Inlet Protection Barrier; Bid Item 19:

    Measurement shall be “Per Each”. The unit price shall be full compensation for supplying gravel bags for each curb inlet, installation of sock gutter/inlet guards, maintenance of barrier with removal of solids build up on upstream side, and removal of barrier at the end of construction, finish grading, clean-up, and all incidental work.

17. SWPPP, Reinforced Filter Fabric Barrier; Bid Item 20:

    Measurement shall be “Per Linear Foot”. The unit price shall be full compensation for supplying the reinforced filter fabric barrier, installation of the barrier, maintenance of barrier with removal of solids build up on upstream side, and removal of barrier at the end of construction, finish grading, clean-up, and all incidental work.

**SUPPLEMENTARY BID ITEMS**

18. “Extra” Bank Sand, As Directed by Owner’s Representative; Supplemental Bid Item 21:

    Measurement shall be “Per Cubic Yard”. Payment shall be full compensation for supplying all materials to deliver bank sand, labor to place bank sand as directed by the Owner’s representative.

19. “Extra” Crushed Limestone Bedding, As Directed by Owner’s Representative; Supplemental Bid Item 22:

    Measurement shall be “Per Cubic Yard”. Payment shall be full compensation for supplying all materials to deliver crushed limestone bedding, labor to place crushed limestone bedding as directed by the Owner’s representative.

20. “Extra” Cement Stabilized Sand, 2.0 Sacks per Ton, As Directed by Owner’s Representative; Supplemental Bid Item 23:

    Measurement shall be “Per Ton”. Payment shall be full compensation for supplying all materials to deliver cement stabilized sand, labor to place cement stabilized sand as directed by the Owner’s representative.

21. “Extra” Class A Concrete, As Directed by Owner’s Representative; Supplemental Bid Item 24:

    Measurement shall be “Per Cubic Yard”. Payment shall be full compensation for supplying all materials to deliver class A concrete, labor to place class A concrete as directed by the Owner’s representative.

22. “Extra” Reinforcing Steel, As Directed by Owner’s Representative; Supplemental Bid Item 25:

    Measurement shall be “Per Pound”. Payment shall be full compensation for supplying all materials to deliver Reinforcing Steel, and labor to place steel as directed by the Owner’s representative.

23. Concrete Surface Restoration, As Directed by Owner’s Representative; Supplemental Bid Item 26:

    Measurement shall be “Per Square Yard”. The unit price shall be full compensation for the base material, reinforced concrete, labor and all appurtenances required for concrete surface replacement. Saw-cutting and excavation of existing area to be repaired is incidental to this item. Repair area shall not exceed area shown on Plans/Exhibits. Areas outside access pits damaged by equipment will be repaired at Contractor’s expense.

24. Turf Establishment, Hydro-mulch Seeding, As Directed by Owner’s Representative; Supplemental Bid Item 27:

    Measurement shall be “Per Acre”. Payment is to be full compensation for the establishment of turf by hydro-mulch seeding in accordance with the Specifications in locations specified by the Engineer.

25. Waterline, Open Cut, As Directed by Owner’s Representative; Supplemental Bid Item 28:

    Measurement shall be “Per Linear Foot” along centerline of pipe without deductions for valves and fittings, from start to line terminus. The unit price shall be full compensation for layout, clearing and grubbing, trenching and incidentals thereto, bank sand bedding, pipe and mechanical joint fitting materials, steel pipe sections (as applicable), pipe placement, tracer wire, thrust blocking and normal backfill to existing grade, testing, disinfection, connections, trench backfill, maintenance, clean-up, trench dewatering, and all incidental work required for the complete contract not specifically included in another payment item.

26. Insertion Valves, As Directed by Owner's Representative; Supplemental Bid Item 29:

    Measurement shall be "Per Each". Payment includes valve with resilient seats, manual operator of type specified, accessories, adjustable valve box, setting, concrete collar, and incidental work as directed by the Owner's representative.

27. Gate Valve, As Directed by Owner's Representative; Supplemental Bid Item 30:

    Measurement "Per Each". Payment includes valve with resilient seats, manual operator of type specified, accessories, adjustable valve box, setting, valve blocking, and incidental work.

28. Remove Existing Fire Hydrant and Replace with Fire Hydrant Assembly, As Directed by Owner's Representative; Supplemental Bid Item 31:

    Measurement shall be "Per Each." Unit price shall be full compensation for excavation, dewatering, cutting, removal of existing fire hydrant including base elbow, for tee (if required), piping, valve, elbow, new fire hydrant 4' bury, extended lead piping (if required), backfill, bypass pumping, cleanup, appurtenances, and any incidentals necessary to complete the work.

29. Short Side Service Connections, As Directed by Owner's Representative; Supplemental Bid Item 32:

    Measurement shall be "Per Each". Payment shall be full payment for tapping of the line through service saddle with corporation stop, temporary capping of stop, installing new service line (with or without casing as required in Bid Form), excavating trench for new service, laying new service tubing from existing meter, to the new waterline, connecting new service line to the meter, brass adapters as necessary, tracer wire, setting new District supplied meter box if required by the District, backfilling trench, and clean-up. No adjustment in the unit price shall be made for varying service line footage.

30. Long Side Service Connection, As Directed by Owner's Representative; Supplemental Bid Item 33:

    Measurement shall be "Per Each". Payment shall be full payment for tapping of the line through service saddle with corporation stop, temporary capping of stop, installing new service line (with or without casing as required in Bid Form), auger under road for new service, laying new service tubing from existing meter to the new waterline, connecting new service line to the meter, brass adapters as necessary, tracer wire, setting new District supplied meter box if required by the District, backfilling auger pit, and clean-up. No adjustment in the unit price shall be made for varying service line footage.

31. Sign Remove and Relocate, As Directed by Owner's Representative; Supplemental Bid Item 34:

    Measurement shall be "Per Each". The unit price shall be full compensation for furnishing all labor, tools, equipment, supplies, and incidentals necessary to complete the work, including the removal of existing signs and relocating them to outside the proposed pavement, as directed by the engineer, to like or better condition, complete in place.

32. Standard Concrete Storm Manhole, As Directed by Owner's Representative; Supplemental Bid Item 35:

    Measurement shall be "Per Each". Payment shall be full compensation for a 4-foot diameter manhole 0 to 8 feet deep, well point dewatering, per details on plans if necessary, complete in place concrete units including cone, rings, frame and cover, accessories, embedment, and backfill per details shown on Plans.

**ALTERNATE BID ITEMS**

33. 18-Inch HP Storm Pipe, As Directed by Owner's Representative; Alternate Bid Item 36:

    Measurement shall be "Per Linear Foot". The unit price shall be full compensation for furnishing and installation of storm sewers of size contained in the bid form including excavation and embedment as required, dewatering, backfilling, finish grading, ditch grading to drain, clean-up and all appurtenances including concrete collars per detail, and work required for the complete placement of proposed storm sewers.

34. 24-Inch HP Storm Pipe, As Directed by Owner's Representative; Alternate Bid Item 37:

    Measurement shall be "Per Linear Foot". The unit price shall be full compensation for furnishing and installation of storm sewers of size contained in the bid form including excavation and embedment as required, dewatering, backfilling, finish grading, ditch grading to drain, clean-up and all appurtenances including concrete collars per detail, and work required for the complete placement of proposed storm sewers.

## ITEM 1401

## DEMOLITION OF ABANDONED FACILITIES

PART I: GENERAL

Description: This Item shall govern the removal of all existing facilities. Materials identified as salvage for the Owner are to be carefully removed, loaded, transported, and unloaded at the Owner's designated reception area. Unless specifically identified in this specification, all other metal components of all facilities are to become the property of the Contractor. No metal components are to remain on the site either above or below ground without the written permission of the Owner. Concrete building slabs are to be removed and disposed off-site. Specific activities associated with each facility are described below:

1.1 Miscellaneous Facilities:

Buildings and their contents, slabs on site, pavement, driveway material, culverts, sidewalks, miscellaneous structures, power poles (District Owned), and yard piping are considered property of the Contractor and are to be removed and properly disposed.

1.2 Fence:

All existing fencing is to be removed from the site. Once the Elevated Storage Tank is on the system, the site must remain secure at all times so as not to jeopardize the health and well being of the District's residents. Existing Fencing is to be considered property of the Contractor and are to be removed and properly disposed.

**END OF SECTION**

**Std. 2/22/96**
**Revised 10/29/15**

# ITEM 1533

## BARRICADES, SIGNS, AND TRAFFIC HANDLING - NO TCP

I. GENERAL

A. Description

This Item shall consist of providing, installing, moving, replacing, maintaining, cleaning and removing from the site, all barricades, signs, lights, and all other devices for controlling and handling traffic as indicated in the Plans and/or Exhibits or as directed by the Engineer.

B. Related Work (if utilized in this project)

1. Item 2221 - Excavation, Trenching and Backfilling for Utilities

2. Item 2600 - Repair of Asphalt Paving

II. MATERIALS

All barricades, signs, lights and other types of devices used in this work shall conform to details shown in the Plans and/or Exhibits or those indicated in the Texas Manual on Uniform Traffic Control Devices (TMUTCD).

III. EXECUTION

For this project, a Traffic Control Plan (TCP) has not been established. Contractor will be required to prepare his own TCP and as necessary in coordination with local TxDOT office.

If Contractor's plan is approved by the Engineer, it may be used. Prior to beginning work, the Contractor shall designate in writing a competent person who will be responsible and available on the project site or in the immediate area to insure compliance with the TCP.

**Std. 11/16/87**
**Revised 10/1/02**

# ITEM 1541

# TRENCH SAFETY SYSTEMS

## I. GENERAL

### A. Description:

The Contractor shall comply with the minimum requirements of this specification. Maintenance and inspection of any shoring and related equipment shall be the responsibility of the Contractor. Owner and/or Engineer reserves the right to require the Contractor to remove, repair and/or replace any portions of the shoring system deemed unsafe but the final responsibility for worker's safety remains with the Contractor.

The Contractor shall determine the safety system needed for the project within the minimum requirements of this specification. For any trench excavation in materials other than solid rock, greater than 5 feet in depth, or where shown on the Plans and/or Exhibits, the Contractor shall provide a trench safety system. The trench safety system shall be in accordance with the appropriate requirements established in the Occupational Safety and Health Administration (OSHA), Safety and Health Regulations, Part 1926, Sub-part P – "Excavations, Trenching and Shoring" (latest edition). The Contractor's responsibility shall be to provide a safe working place for his employees, and he agrees to hold harmless and defend the Owner and/or Engineer against any claim resulting from failure of the trench safety system or lack of one.

### B. Definitions

1. Angle of Repose: The greatest angle above the horizontal plane at which a material will lie without sliding.

2. Bank: A mass of soil rising above a digging level.

3. Braces: The horizontal members of the shoring system whose ends bear against the uprights or stringers.

4. Excavation: Any manmade cavity or depression in the earth's surface, including its sides, walls, or faces, formed by earth removal and producing unsupported earth conditions by reasons of the excavation. If installed forms or similar structures increase the depth-to-width relationship, an excavation may become a trench.

5. Hard Compact Soil: All earth materials not classified as running or unstable.

6. Kickouts: Accidental release or failure of a shore or brace.

7. Sheet Pile: A pile, or sheeting, that may form one of a continuous interlocking line, or a row of timber, concrete, or steel piles, driven in close contact to provide a tight wall to resist the lateral pressure of water, adjacent earth, or other materials.

8. Sides, Walls, Faces: The vertical or inclined earth surfaces formed as a result of excavation work.

9. Slope: The angle with the horizontal at which a particular earth material will stand indefinitely without movement.

10. Stringers, Wales: The horizontal members of a shoring system whose sides bear against the uprights or earth.

11. Trench: A narrow excavation made below the surface of the ground. In general, the depth is greater than the width, but the width of a trench is not greater than 15-feet.

12. Trench Jack: Screw or hydraulic type jacks used as cross bracing in a trench shoring system.

13. Trench Shield: A shoring system composed of steel plates and bracing, welded or bolted together, which support the walls or a trench from the ground level to the trench bottom and which can be moved along as work progresses.

14. Unstable Soil: Earth material, other than running, that because of its nature or the influence of related conditions, cannot be depended upon to remain in place without extra support, such as would be furnished by a system of shoring.

15. Uprights: The vertical members of a shoring system.

II. MATERIALS

A. Materials used for sheeting, sheet piling, cribbing, bracing, shoring, and underpinning shall be in good serviceable condition, and timbers shall be sound, free from large or loose knots, and of proper dimensions as called for in the OSHA construction standards, Sub-part P, Table P-2. All materials which are found to be defective in any way shall be immediately removed from the job site.

It shall be the responsibility of the Contractor to regularly check all trench safety equipment for soundness and adequacy.

B. Steel trench shields shall be constructed of steel plate sides, welded to a steel framework. All shields shall be constructed in order to provide protection equivalent to or greater than sheeting or shoring required for the trench. The Contractor shall provide proof of such before using any trench shield. Adjustable jacks may be used in order to adjust the shield to varying trench widths. An access ladder shall be provided at the midpoint. Pipe or flat steel runners or wheels shall be installed under the side walls for ease of movement of the shield during trenching operations. Substantial lifting eyes and/or rings shall be welded at proper points for moving of the shield. For adaptability to deep and shallow trenches, the shield may be made with top and bottom sections. When the sides of the trench extend above the top of the shield, a reinforced roof with hatches shall be provided. Forced ventilation shall be provided for fully-enclosed shields.

C. All maintenance of the trench safety equipment shall be the sole responsibility of the Contractor.

## III. EXECUTION

All Contractors shall provide a trench safety system for all trench excavations which exceed a depth of 5-feet. Trench Safety system shall conform to the Occupational Safety and Health Administration (OSHA) standards latest revision along with the following additions and revisions. The types of trench safety systems currently allowed include shoring, bracing, solid shoring, sloping of the ground, and trench shields. The Contractor may submit an alternative method of trench safety, but may not use such until he has submitted to the Owner written approval by a Registered Professional Engineer. Should the Contractor decide to slope the sides of the trench, he shall have the angle of repose of the soil determined by an approved independent soils testing lab. Soil core samples taken to a depth of at least the depth of the trench shall be taken a minimum of every 700-feet. A minimum of two copies of the results of the lab tests shall be provided to the Engineer. The cost of the tests shall be included in the unit price bid for the trench safety system.

A. Each Contractor shall be responsible and liable for his own Trench Safety System, including self inspections, whether or not a project representative is present on the job site. The Contractor shall install additional safety equipment if requested to do so by the Engineer. The Engineer's decision shall be final. The cost of additional trench safety equipment required shall be the responsibility of the Contractor.

B. Before beginning any excavation the Contractor shall make an inspection of the job site. He shall pay special attention to the type of soil or soils in which he will be working, any adjacent roads, highways, and railroads, and any previous excavations which may affect the integrity of trench excavations. All underground installations shall be located, including utility lines, pipelines, etc., before any excavation begins.

The trench safety system shall be installed in a true horizontal position, be spaced vertically and shall be secured to prevent sliding, falling, or kickouts. The trench safety system shall be effective to the bottom of the excavation. All trenches shall be provided with an adequate means of exit at all times with spacings of 25-feet or less. These means of exit shall be anchored in place in order to aid in the event a quick exit is necessary. During trench excavation, the excavated material shall be placed a minimum of 2-feet away from the edge of the trench.

C. The Contractor shall make an inspection of all trench excavations. He shall check for any evidence of cave-ins, slides, etc. If any change in soil conditions or failure of the trench is found, the Contractor shall remedy such. All water shall be diverted by suitable means to prevent the entrance of same into any excavation. No water shall be allowed to accumulate in any excavation and shall be removed as soon as possible.

## TABLE P-2

## TRENCH SHORING - MINIMUM REQUIREMENTS

| Depth of Trench | Kind of Condition of Earth | Size and Spacing of Members | | | | | | | | | | |
|---|---|---|---|---|---|---|---|---|---|---|---|---|
| | | Uprights | | Stringers | | Cross Braces: Width of Trench | | | | | Maximum Spacing | |
| | | Minimum Dimension | Maximum Spacing | Minimum Dimension | Maximum Spacing | Up to 3 Feet | 3 to 6 Feet | 6 to 9 Feet | 9 to 12 Feet | 12 to 15 Feet | Vertical | Horizontal |
| Feet | | Inches | Feet | Inches | Feet | Inches | Inches | Inches | Inches | Inches | Feet | Feet |
| 5 to 10 | Hard, Compact | 3x4 or 2x6 | 6 | | | 2x6 | 4x4 | 4x6 | 6x6 | 6x8 | 4 | 6 |
| | Likely-to-Crack | 3x4 or 2x6 | 3 | 4x6 | 4 | 2x6 | 4x4 | 4x6 | 6x6 | 6x8 | 4 | 6 |
| | Soft, Sandy, or Filled | 3x4 or 2x6 | Close Sheeting | 4x6 | 4 | 4x4 | 4x6 | 6x6 | 6x8 | 8x8 | 4 | 6 |
| | Hydrostatic Pressure | 3x4 or 2x6 | Close Sheeting | 6x8 | 4 | 4x4 | 4x6 | 6x6 | 6x8 | 8x8 | 4 | 6 |
| 10 to 15 | Hard | 3x4 or 2x6 | 4 | 4x6 | 4 | 4x4 | 4x6 | 6x6 | 6x8 | 8x8 | 4 | 6 |
| | Likely-to-Crack | 3x4 or 2x6 | 2 | 4x6 | 4 | 4x4 | 4x6 | 6x6 | 6x8 | 8x8 | 4 | 6 |
| | Soft, Sandy, or Filled | 3x4 or 2x6 | Close Sheeting | 4x6 | 4 | 4x6 | 6x6 | 6x8 | 8x8 | 8x10 | 4 | 6 |
| | Hydrostatic Pressure | 3x6 | Close Sheeting | 8x10 | 4 | 4x6 | 6x6 | 6x8 | 8x8 | 8x10 | 4 | 6 |
| 15 to 20 | All Kinds of Conditions | 3x6 | Close Sheeting | 4x12 | 4 | 4x12 | 6x8 | 8x8 | 8x10 | 10x10 | 4 | 6 |
| Over 20 | All Kinds of Conditions | 3x6 | Close Sheeting | 6x8 | 4 | 4x12 | 8x8 | 8x10 | 10x10 | 10x12 | 4 | 6 |

Trench jacks may be used in lieu of, or in combination with, cross braces.
Shoring is not required in solid rock, hard shale, or hard slag.
Where desirable, steel sheet piling and bracing of equal strength may be substituted for wood.

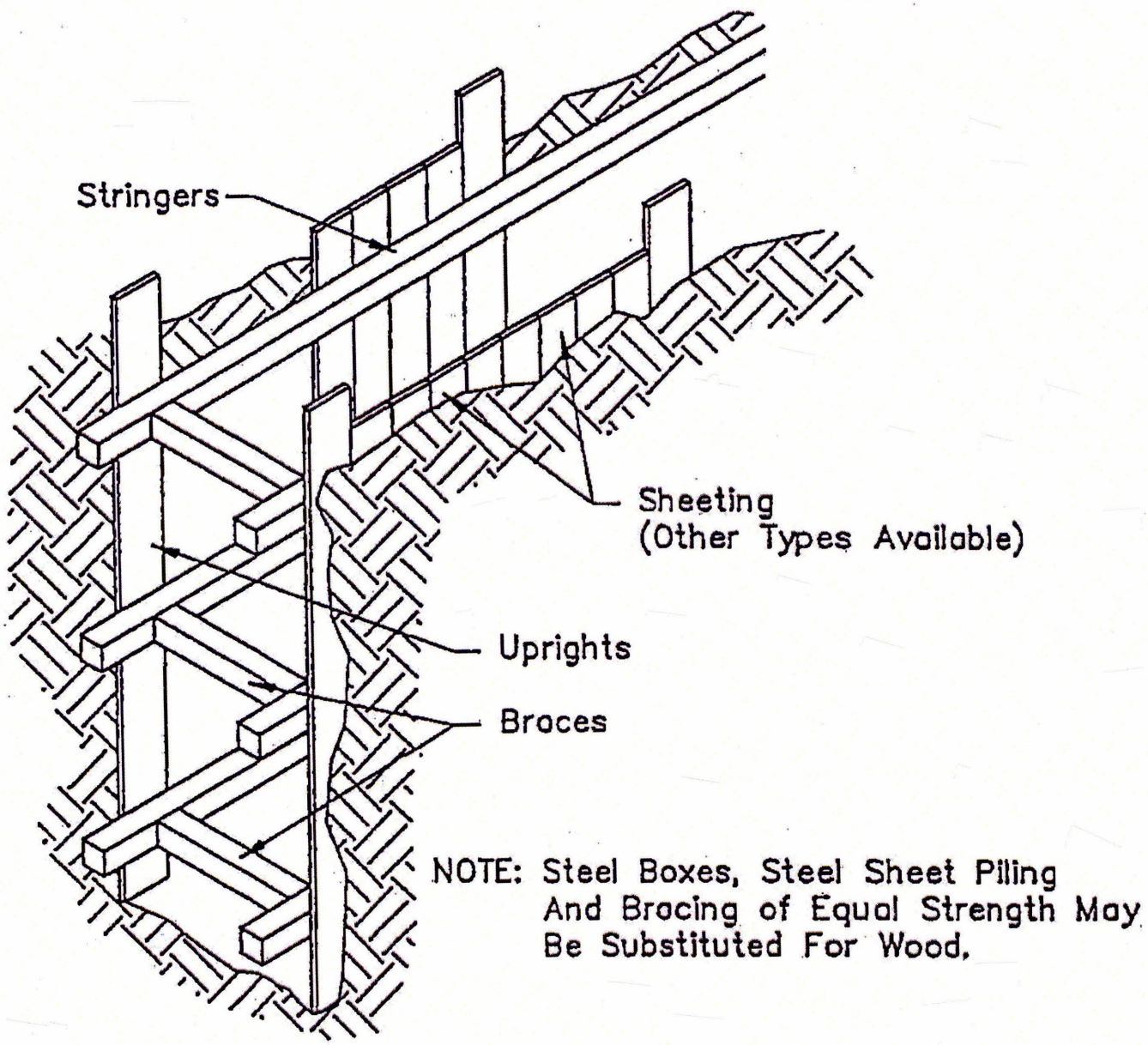


**SHORING DETAIL**

N.T.S.

1541 *** 6/6

**LJA Project No. E019-1014**

# ITEM 1567

# SOURCE CONTROL - EROSION AND SEDIMENTATION

## I. GENERAL

### A. Scope

1. This section provides for erosion and sedimentation controls required for this project. The project does not require a formal pollution prevention plan. However, erosion and sedimentation controls will be required within roadside ditches and channelized ditches where soils disturbed during construction may erode and travel as sediments.

2. The minimum requirements for erosion control will be silt control devices across roadside ditches prior to channelized outfalls and across the channelized outfalls immediately downstream of construction activity.

3. Filter fabric fence or hay bales may be utilized for sediment control in roadside ditches. Reinforcing filter fabric barrier shall be used in channelized flow areas.

### B. Measurement and Payment

See Item 1400 - Measurement and Payment

### C. Related Work (if utilized in this project)

1. Item 2102 - Clearing and Grubbing

2. Item 2107 - Turf Establishment

3. Item 2221 - Excavation, Trenching and Backfilling for Utilities

## II. MATERIALS

### A. Filter Fabric

1. Provide woven or nonwoven geotextile filter fabric made of either polypropylene, polyethylene, ethylene, or polyamide material.

2. Geotextile fabric shall have a minimum grab strength of 100 psi in any principal direction (ASTM D-4632), Mullen burst strength exceeding 200 psi (ASTM D-3786), and the equivalent opening size between 50 and 140.

3. Filter fabric material shall contain ultraviolet inhibitors and stabilizers to provide a minimum of 6 months of expected usable construction life at a temperature range of 0 degrees F to 120 degrees F.

4. Representative Manufacturers: Mirafi Inc., or equal.

B. Fencing

1. Provide woven galvanized steel wire fence with minimum thickness of 14 gauge and a maximum mesh spacing of 6-inches.

2. Woven wire shall be galvanized 2-inch by 4-inch welded wire fabric, 12 - ½ gauge.

III. EXECUTION

A. Preparation and Installation

1. No clearing and grubbing or rough cutting shall be permitted until erosion and sediment control systems are in place, other than site work specifically directed by the Engineer to allow soil testing and surveying.

2. Equipment and vehicles shall be prohibited by the Contractor from maneuvering on areas outside of dedicated rights-of-way and easements for construction. Damage caused by construction traffic to erosion and sediment control systems shall be repaired immediately by the Contractor.

3. The Contractor shall be responsible for collecting, storing, hauling, and disposing of spoil, silt, and waste materials as specified in this or other Specifications and in compliance with applicable federal, state, and local rules and regulations.

4. Contractor shall conduct all construction operations under this Contract in conformance with the erosion control practices described in the Plans and/or Exhibits and this Specification.

5. The Contractor shall install, maintain, and inspect erosion and sediment control measures and practices as specified in the Plans and/or Exhibits and in this or other Specifications.

B. Topsoil Placement for Erosion and Sediment Control Systems

1. When topsoil is specified as a component of another Specification, the Contractor shall conduct erosion control practices described in this Specification during topsoil placement operations.

a. When placing topsoil, maintain erosion and sediment control systems, such as swales, grade stabilization structures, berms, dikes, waterways, and sediment basins.

b. Maintain grades which have been previously established on areas to receive topsoil.

c. After the areas to receive topsoil have been brought to grade, and immediately prior to dumping and spreading the topsoil, loosen the subgrade by discing or by scarifying to a depth of at least 2-inches to permit bonding of the topsoil to the subsoil.

d. No sod or seed shall be placed on soil which has been treated with soil sterilants until sufficient time has elapsed to permit dissipation of toxic materials.

C. Dust Control

1. Implement dust control methods to control dust creation and movement on construction sites and roads and to prevent airborne sediment from reaching receiving streams or storm water conveyance systems, to reduce on-site and off-side damage, to prevent health hazards, and to improve traffic safety.

2. Control blowing dust by using one or more of the following methods:

a. Mulches bound with chemical binders

b. Temporary vegetative cover.

c. Spray-on adhesives on mineral soils when not used by traffic.

d. Tillage to roughen surface and bring clods to the surface.

e. Irrigation by water sprinkling.

f. Barriers using solid board fences, snow fences, burlap fences, crate walls, bales of hay, or similar materials.

3. Implement dust control methods immediately whenever dust can be observed blowing on the project site.

D. Keeping Streets Clean

1. Keep streets clean of construction debris and mud carried by construction vehicles and equipment. If necessary to keep the streets clean, install stabilized construction exits at construction, staging, storage, and disposal areas. A vehicle/equipment wash area (stabilized with coarse aggregate) may be installed adjacent to the stabilized construction exit, as needed. Release wash water into a drainage swale or inlet protected by erosion and sediment control measures. Construction exit and wash areas are specified in Section 01569 - Stabilized Construction Exit.

2. In lieu of or in addition to stabilized construction exits, shovel or sweep the pavement to the extent necessary to keep the street clean. Water hosing or sweeping of debris and mud off of the street into adjacent areas is not allowed.

E. Equipment Maintenance and Repair

1. Confine maintenance and repair of construction machinery and equipment to areas specifically designated for that purpose. Locate such areas so that oils, gasoline, grease, solvents, and other potential pollutants cannot be washed directly into receiving streams or storm water conveyance systems. Provide these areas with adequate waste disposal receptacles for liquid as well as solid waste. Clean and inspect maintenance areas daily.

2. On a construction site where designated equipment maintenance areas are not feasible, take precautions during each individual repair or maintenance operation to prevent potential pollutants from washing into streams or conveyance systems. Provide temporary waste disposal receptacles.

F. Waste Collection and Disposal

1. Contractor shall formulate and implement a plan for the collection and disposal of waste materials on the construction site. In plan, designate locations for trash and waste receptacles and establish a collection schedule. Methods for ultimate disposal of waste shall be specified and carried out in accordance with applicable local, state, and federal health and safety regulations. Make special provisions for the collection and disposal of liquid wastes and toxic or hazardous materials.

2. Keep receptacles and waste collection areas neat and orderly to the extent possible. Waste shall not be allowed to overflow its container or

accumulate from day-to-day. Locate trash collection points where they will least likely be affected by concentrated storm water runoff.

G. Washing Areas

Vehicles such as concrete delivery trucks or dump trucks and other construction equipment shall not be washed at locations where the runoff will flow directly into a watercourse or storm water conveyance system. Designate special areas for washing vehicles. Locate these areas where the wash water will spread out and evaporate or infiltrate directly into the ground, or where the runoff can be collected in a temporary holding or seepage basin. Beneath wash areas construct a gravel or rock base to minimize mud production.

H. Storage of Construction Materials and Chemicals

1. Isolate sites where chemicals, cements, solvents, paints, or other potential water pollutants are stored in areas where they will not cause runoff pollution.

2. Store toxic chemicals and materials, such as pesticides, paints, and acids in accordance with manufacturer's guidelines. Protect groundwater resources from leaching by placing a plastic mat, packed clay, tar paper, or other impervious materials on any areas where toxic liquids are to be opened and stored.

I. Demolition Areas

Demolition activities which create large amounts of dust with significant concentrations of heavy metals or other toxic pollutants shall use dust control techniques to limit transport or airborne pollutants. However, water or slurry used to control dust contaminated with heavy metals or toxic pollutants shall be retained on the site and shall not be allowed to run directly into watercourses or storm water conveyance systems. Methods of ultimate disposal of these materials shall be carried out in accordance with applicable local, state, and federal health and safety regulations.

J. Sanitary Facilities

Provide the construction sites with adequate portable toilets for workers in accordance with Section 01500 - Temporary Construction Facilities, and applicable health regulations.

K. Pesticides

Use and store pesticides during construction in accordance with manufacturer's

guidelines and with local, state, and federal regulations. Avoid overuse of pesticides which could produce contaminated runoff. Take great care to prevent accidental spillage. Never wash pesticide containers in or near flowing streams or storm water conveyance systems.

L. Construction Methods - Filter Fabric Fence

1. Provide filter fabric fence systems in accordance with the Drawing detail for Filter Fabric Fences. Filter fabric fences shall be installed in such a manner that surface runoff will percolate through the system in sheet flow fashion and allow sediment to be retained and accumulated.

2. Attach the filter fabric to 1-inch by 2-inch wooden stakes spaced a maximum of 3-feet apart and embedded a minimum of 8-inches. If filter fabric is factory preassembled with support netting, then maximum spacing allowable is 8-feet. Install wooden stakes at a slight angle toward the source of anticipated runoff.

3. Trench in the toe of the filter fabric fence with a spade or mechanical trencher so that the downward face of the trench is flat and perpendicular to the direction of flow. The v-trench configuration as shown on the Plans and/or Exhibits may also be used. Lay filter fabric along the edges of the trench. Backfill and compact trench.

4. Filter fabric fence shall have a minimum height of 18 inches and a maximum height of 36-inches above natural ground.

5. Provide the filter fabric in continuous rolls and cut to the length of the fence to minimize the use of joints. When joints are necessary, splice the fabric together only at a support post with a minimum 6-inch overlap and seal securely.

6. Inspect sediment filter barrier systems after each rainfall, daily during periods of prolonged rainfall, and at a minimum once each week. Repair or replace damaged sections immediately. Remove sediment deposits when silt reaches a depth one-third the height of the fence or 6-inches, whichever is less.

M. Construction Methods - Reinforced Filter Fabric Barrier

1. Provide filter fabric barriers in accordance with the Drawing detail for Reinforced Filter Fabric Barrier. Filter fabric barrier systems shall be installed in such a manner that surface runoff will percolate through the system in sheet flow fashion and allow sediment to be retained and accumulated.

2. Attach the woven wire support to 1-inch by 2-inch wooden stakes spaced a maximum of 6 feet apart and embedded a minimum of 8 inches. Install wooden stakes at a slight angle toward the source of the anticipated runoff.

3. Trench in the toe of the filter fabric barrier with a spade or mechanical trencher so that the downward face of the trench is flat and perpendicular to the direction of flow as shown on the Plans and/or Exhibits. Lay filter fabric along the edges of the trench. Backfill and compact trench.

4. Securely fasten the filter fabric material to the woven wire with tie wires.

5. Reinforced filter fabric barrier shall have a height of 18-inches.

6. Provide the filter fabric in continuous rolls and cut to the length of the fence to minimize the use of joints. When joints are necessary, splice the fabric together only at a support post with a minimum 6-inch overlap and seal securely.

7. Inspect the reinforced filter fabric barrier systems after each rainfall, daily during periods of prolonged rainfall, and at a minimum once each week. Repair or replace damaged sections immediately. Remove sediment deposits when silt reaches a depth one-third the height of the barrier or 6-inches, whichever is less.

**Std. 2/26/96**
**Revised 8/20/15**

# ITEM 2107

# TURF ESTABLISHMENT

## I. GENERAL

This Item specifies requirements for preparation of the seedbed and planting of turfgrass.

## II. MATERIALS

A. Seedbed (Top Soil): Topsoil may be from on-site or imported. All topsoil shall be easily cultivated, relatively free from objectionable material including, gravel, large roots, stumps, wood, brush, debris, hard clods, clay balls, hardpan, refuse or other deleterious materials, and be of reasonably uniform quality.

1. In the case of on-site or nearby source, topsoil is the surface layer of material containing decaying vegetable matter and roots. It is not necessary to strip all soil containing fine hair like roots, only soil containing moderate to heavy root mat.

2. Imported topsoil shall satisfy the following property values:

| | TEST PROPERTY | TEST METHOD | UNIT | VALUE | |
|---|---|---|---|---|---|
| a. | Soil Reaction | ASTM D4972 | pH | 6-8 | (a) |
| b. | Passing No. 4 Sieve | ASTM D422 | % | 95-100 | (b) |
| c. | Sand Size, 2.0-0.05 mm | ASTM D422 | % | 10-70 | (b) |
| d. | Silt Size, 0.05-0.005 mm | ASTM D422 | % | 0-40 | (b) |
| e. | Clay Size, <0.005 mm | ASTM D422 | % | 20-50 | (b) |
| f. | Easily Oxidizable Organic Matter | AASHTO T194 | % | 2.5-10 | (b&c) |

NOTES:

a) Determine pH by Method A, pH meter. In the event that the imported topsoil does not satisfy the specified pH range, Contractor shall achieve the desired pH by applying soil amendments as recommended by the certified agronomist's report of soil sample analysis.

b) Dry weight of sample.

c) Soil testing company shall identify test method used if different than listed.

d) Soil tests will be paid for by Owner.

B. Seed: Seed shall be applied in accordance with the following:

| SEED PLAN | PLANTING DATES | PLANT SPECIES | PLS RATE (pounds/acre) |
|---|---|---|---|
| 1 | October 1 | *"KY-31" Tall Fescue | 15 |
| | to | Hulled Common Bermuda grass | 50 |
| | March 31 | *"Gulf" Annual Ryegrass | 15 |
| | | Crimson Clover & Inoculant | 20 |
| 2 | April 1 | *Foxtail Millet | 15 |
| | to | Hulled Common Bermuda grass | 60 |
| | Sept. 30 | | |
| 3 | April 1 | *Foxtail Millet | 15 |
| | to | Hulled Common Bermuda grass | 60 |
| | Sept. 30 | "Pensacola" Bahia grass | 15 |
| 4 | As directed | Hulled Common Bermuda grass | 50 |
| 5 | As directed | Crimson Clover & Inoculant | 20 |

* - Indicates **MAXIMUM APPLICATION RATE ALLOWED**.

NOTES:

a) All planting dates are approximate. Engineer shall determine Seed Plan prior to the start of seeding.

b) Seed Plan 1 shall be used when the average maximum daylight air temperature for the preceding two calendar weeks is less than 75 degrees F.

c) Seeding rate is for "Pure Live Seed (PLS)." Percentage of purity, germination, and dormant seeds, as shown on the seed tag, shall be used to determine actual application rate of bulk material to obtain required amount of PLS per acre.

Pure Live Seed (PLS) = (% Germination + % Dormant seed) x % Purity.

d) Seed Plans 4 and 5 shall be used **only** as directed by the Engineer.

C. Sod

1. Sod shall consist of live, growing Bermudagrass or "Raleigh" St. Augustine grass, as required by the Engineer.

2. Sod shall be dark green and have a healthy vigorous system of dense, thickly matted roots throughout the soil of the sod for a minimum depth of 1-inch (± ¼ inch), excluding top growth and thatch.

3. Sod shall contain no more than 5% noxious weeds and other crop and weed contaminants. Sod shall be free of diseases and harmful insects.

4. Sod shall be cut in uniform panels. Broken panels or panels with torn or uneven ends will not be accepted.

5. Sod panels shall be strong enough to support their own weight and retain size and shape when suspended vertically from a firm grasp on the upper 10% of the panel.

6. Sod shall be harvested, delivered, and installed within a 36 hour period. Sod not planted within this time period shall be inspected and approved by the Engineer prior to installation.

7. Sod which has been allowed to dry out by exposure to the sun and air is unacceptable and shall be rejected.

D. Fertilizer

1. Fertilizer shall be a commercial type conforming to the fertilizer laws in effect as regulated by the Texas Department of Agriculture. A pelleted or granulated fertilizer shall be used which has the specified analysis. The guaranteed analysis represents the percent nitrogen (total N), percent water insoluble nitrogen (where applicable), percent phosphate (citrate soluble P as $P_2O_5$), and percent potash (water soluble K and $K_2O$) nutrients as determined by the methods of the Association of Official Analytical Chemists.

2. Contractor shall use a complete fertilizer with an analysis ratio of 3:1:2 (N:P:K), such as 15:5:10, or as directed by the Engineer.

3. Fertilizer shall be applied at a rate of 60 pounds N/acre, which is 400 pounds/acre of 15:5:10.

4. Fertilizer shall be delivered in bags or containers clearly labeled with name and address of the manufacturer, weight, and guaranteed analysis.

Bulk fertilizer shall be acceptable if accompanied by an invoice or label with the name and address of the manufacturer and guaranteed analysis and appropriate means to accurately measure and record weight of fertilizer used.

5. Fertilizer shall be in clean, unopened, and undamaged bags.

6. Fertilizer shall not contain objectionable material which may hinder proper distribution.

7. Fertilizer shall be dry and free-flowing. Caked fertilizer will be rejected.

## III. EXECUTION

### A. General

1. Turf establishment shall be performed as soon as practical after construction activities, but not later than 21 calendar days. Long term exposure of bare earth will not be permitted. Engineer may stop work on portions, or all, of the project until exposed areas receive the designated turf establishment.

2. Work shall not be performed on areas that are so wet that equipment operation causes tracking and compaction of the ground, or when the soil is in a non-tillable condition.

### B. Seedbed

1. Seedbed Installation, Imported

   a. Imported Topsoil: Engineer may direct the Contractor to import topsoil if on-site seedbed is of insufficient quantity or quality.

   b. Topsoil Delivery, Storage and Handling: Topsoil shall be delivered, stockpiled and handled in such a way as to not contaminate the material with other soils or objectionable materials.

   c. Topsoil Excavation (On-Site): Contractor shall strip topsoil specified on the Plans and/or Exhibits or as directed by the Engineer from areas to be excavated or filled and stockpile it for use on the final designated area.

d. Topsoil Placement

1) Prior to placing topsoil, scarify the subgrade to a minimum depth of 4-inches until it is loose and uncompacted to provide bonding of topsoil layer to subgrade.

2) Top elevation of topsoil shall be placed at the design finish grade elevation shown on the Plans and/or Exhibits.

3) Topsoil shall not be spread when excessively wet or dry.

e. Disposal: Contractor shall dispose of excess topsoil only after approval by the Engineer and in accordance with Item 2227 - Waste Material Disposal.

2. Seedbed Preparation, On Site

a. Seedbed is defined as the soil designated to support turf grass and/or sod, approximately 6-inches in depth below the design surface.

b. Irregularities in finished seedbed surfaces shall be corrected to eliminate depressions.

c. Disc, harrow, rake and grade the seedbed until it is free of clods and roots.

d. Roots and woody plants over 1-inch diameter shall be removed.

e. Final surface shall be left in a roughened condition. Imprints from the equipment shall be left horizontally on the slope.

f. Surface crusting of the seedbed after rainfall or compaction, but prior to turf establishment, shall be broken up by disking, harrowing, or raking.

g. For areas receiving sod, grade the seedbed adjacent to existing turf, pavement, etc., to permit sod to be flush with adjacent surfaces.

h. Prepared seedbeds shall be protected from damage by pedestrian or vehicular traffic.

i. Prepared seedbeds shall be inspected and accepted by the Engineer prior to turf establishment.

C. Seeding Methods: Method of planting shall be as noted on the Bid Sheets or Plans and/or Exhibits, or as directed by the Engineer.

1. Dry Application

a. Fertilizer shall be spread evenly and uniformly and incorporated (disked, raked, or harrowed) into the seedbed prior to seeding.

b. Seeding

1) Plant seed with a broadcast seeder or a culti-packer seeder. Grass seed shall be planted no deeper than ¼-inch, and the distance between rows shall be 12-inches or less. Distribute seed uniformly.

2) Roll the planted seedbed with a culti-packer or rake immediately after seeding and prior to applying mulch cover.

3) Seed may be broadcast by hand for small areas or areas inaccessible to seeding equipment, as approved by the Engineer. Areas seeded by hand shall be rolled or lightly compacted, if possible.

c. Mulching

1) Immediately after application of seed, straw or hay mulch shall be applied to all seeded areas with a slope steeper than 6H:1V (Horizontal:Vertical).

2) Straw or hay mulch shall be applied at a rate of 2,500 pounds (dry weight) per acre.

3) The straw or hay mulch must be secured with hydromulch or other approved methods.

a) Hydromulch, consisting of an homogeneous aqueous mixture of recycled paper fiber, water, and tackifier, shall be applied to achieve a rate of 1,000 pounds of paper fiber mulch per acre over the straw mulch. Guar gum tackifier shall be applied at a minimum rate of 50 pounds (dry weight) per acre.

b) Application rate for other tackifier/soil binder compounds shall be in accordance with

manufacturer recommendations and approved by the Engineer.

d. Watering: After mulching, water the seedbed until the surface is uniformly moist to an approximate depth of ½-inch. Excessive watering pressure or quantity which would cause washing of mulch and seed, erosion, or rilling shall not be allowed.

2. Hydroseeding With Mulch

a. Hydroseeding with mulch is the application of an homogeneous aqueous mixture of seed, water, fertilizer, dye, wood fiber mulch, and tackifier/soil binder to the seedbed.

b. Fertilizer shall be added to the aqueous mixture no more than 30 minutes prior to application to prevent damage to the seed. Fertilizer shall be completely water soluble.

c. Guar gum tackifier shall be applied at a minimum rate of 50 pounds (dry weight) per acre.

d. Wood fiber mulch shall be applied at a rate of 2,000 pounds (dry weight) per acre.

e. Application rate for other tackifier/soil binder compounds shall be in accordance with manufacturer's recommendations and approved by the Engineer.

3. Overseeding

a. Overseeding is the application of an homogeneous aqueous mixture containing water, seed (per Seed Plan 4 or 5), and fertilizer to an area with existing vegetation.

b. At the direction of the Engineer, site shall be mowed prior to overseeding.

c. Soil surface shall be lightly disked no more than 1-inch deep.

d. Fertilizer shall be added to the aqueous mixture no more than 30 minutes prior to application to prevent damage to the seed. Fertilizer shall be completely water soluble.

e. Area shall be rolled with a culti-packer, or lightly harrowed or raked to cover seed with a ¼-inch of soil.

D. Sodding

1. Sod shall be placed in areas as shown on the Plans and/or Exhibits or as directed by the Engineer.

2. Fertilizer shall be spread evenly and uniformly and incorporated (disked, raked, or harrowed) into the seedbed prior to placing sod.

3. Prepared seedbed shall be lightly watered immediately prior to placing sod, as required.

4. Sod panels shall be placed tightly against each other in rows.

5. Lateral joints shall be staggered. Care shall be exercised to ensure the sod is not stretched or overlapped and that all joints are butted tightly with no spaces between strips.

6. Tamp or roll the sod to ensure good contact with the seedbed.

7. Lightly water sod during installation to prevent excessive moisture loss.

8. Immediately after installation of sod, remove extraneous clumps of sod or soil on sod, rake and wash off plant remnants on sod or adjacent pavements.

## IV. QUALITY ASSURANCE

A. Engineer shall accept turf establishment when specified area is complete with an established growth on soil stabilized turf.

B. Contractor shall be responsible for repairing areas damaged until the turf establishment is accepted by the Engineer. Repairs include, but not limited to, damage due to erosion, rilling, traffic, or other causes.

C. Contractor shall replace all dead or dying sod panels.

**Std. 7/1/87**
**Revised 10/1/02**

# ITEM 2210

# SITE GRADING

## I. GENERAL

Within limits indicated, or in areas where existing grade is to be altered, strip existing topsoil to 6-inch depth, and stockpile in approved areas for subsequent replacement. Remove and dispose of all vegetation, roots, and waste materials in an approved manner.

## II. MATERIALS

A. Site Fill: Use approved excess excavation or borrow material. Where necessary to borrow material, borrow from approved source, excavate, and clean up borrow area. Material stripped from borrow site not to be reused unless specifically designated on Plans and/or Exhibits.

B. Select Fill: Select fill shall be lean clay to sandy, lean clay soil with a maximum liquid limit of 35 and a PI range of 8 to 20 and a minimum of 60 percent passing the No. 200 sieve. Select fill may consist of lime stabilized soils excavated on site. Lime stabilization of 8-inch loose lifts should be performed by blending 25 pounds of hydrated lime per square yard into each 8-inch loose lift of fill soils.

## III. EXECUTION

A. Surface Drainage: Maintain surface drainage on site during construction.

B. Select Fill Under Structures and Roads: Place select fill in 8-inch maximum layers, measured loose, and compact at or near optimum moisture with tamping roller (sheepsfoot) pulled with crawler-mounted tractor to within ± 2 percent of optimum moisture content AASHTO Standard T-99-74 density. Fill to be placed to subgrade elevation without addition of topsoil. Where select fill to subgrade elevation is less than 6-inches, scarify to a depth of 6-inches and compact as specified before.

C. Site Fill: Place approved fill to within 4-inches of finish grade shown on all areas not covered by structures or roads in 10-inch maximum layers, measured loose, and compact at or near optimum moisture to at least 90 percent ASTM D 698 density, at or within 3 percent of the optimum moisture content, unless otherwise shown on Plans and/or Exhibits.

D. Topsoil: Place topsoil over all areas within limits shown on Plans and/or Exhibits. After construction has been substantially complete and site fill made, grade site 4-inches lower than finished grade on all unpaved areas, clear ground surface of all foreign materials, then place 4-inches of topsoil to bring site to smooth finished grade indicated.

E. Waste: Waste stripped materials from within limits indicated. Spread waste material over designated area, dress by blading, and slope to provide drainage.

F. Final Clean-Up: Level washes, ruts, depressions, and mounts to give areas smooth finish.

**Std. 7/1/87**
**Revised 4/10/14**

# ITEM 2220

# STRUCTURAL EXCAVATION AND BACKFILL

## I. GENERAL

A. Description: This section describes the excavation for and backfilling around completed structures and the disposal of all excess excavated material. All operations required for the proper completion of the excavation work, including sheeting, shoring and bracing, dewatering of excavations and compaction of backfill are included under this section.

B. Protection: Before the start of earthwork operations, adequately protect existing structures, utilities, trees and shrubs and other permanent objects. Costs resulting from damage to permanent facilities due to negligence or lack of adequate protection will be charged to the contractor. The contractor will also be charged for damage to facilities scheduled for later removal or demolition if the damage sufficiently impairs proper operation to the extent that temporary replacement or repair is required.

C. Blasting: Blasting will not be permitted.

D. Related Work (if utilized in this project)

1. Item 2227 - Waste Material Disposal

## II. MATERIALS

A. Regular Backfill: Where no other backfill is specified, use suitable soils from the excavation as backfill material.

B. Sand Backfill: Where sand backfill is specified, use reasonably clean bank sand from an approved source. The sand must be free from large lumps of clay, rubbish, organic matter or other deleterious substances. Not more than 12 percent by weight shall pass the 200 mesh sieve and the plasticity index shall not exceed 4.0.

C. Select Fill: Select fill shall be lean clay to sandy, lean clay soil with a maximum liquid limit of 35 and a PI range of 8 to 20 and a minimum of 60 percent passing the No. 200 sieve. Select fill may consist of lime stabilized soils excavated on site. Lime stabilization of 8-inch loose lifts should be performed by blending 25 pounds of hydrated lime per square yard into 8-inch loose lift of fill soils.

D. Cement Stabilized Backfill

1. Cement stabilized sand shall be used for backfill and bedding as called for on the Plans and/or Exhibits or as directed by the Engineer.

2. Cement shall consist of Type I portland cement conforming to ASTM C 150.

3. Sand shall be clean, durable sand containing not more than the following:

   a. Deleterious materials

      1) Clay lumps, ASTM C 142; less than 0.5 percent.

      2) Lightweight pieces, ASTM C 123; less than 5.0 percent.

      3) Organic impurities, ASTM C 40; shall not show a color darker than the standard color.

      4) Aggregate: Use sand containing deleterious materials not to exceed the following requirements by weight.

| | |
|---|---|
| Material removed by decantation | 5.0% |
| Other deleterious substances such as coal, shale, or coated grains of soft flaky particles | 2.0% |

Gradation Requirements:

| | |
|---|---|
| Retained on 3/8-inch sieve | 0% |
| Retained on 1/4-inch sieve | 0% - 5% |
| Retained on 20-mesh sieve | 15% - 50% |
| Retained on 100-mesh sieve | 80% - 100% |

   b. Plasticity index shall be six (6) or less when tested in accordance with ASTM D 423 and ASTM D 424.

4. Water shall be potable, free of oils, acids, alkalies, organic matter or other deleterious substances.

5. Sand cement mixture product shall consist of the proper percentage of cement per cubic yard or per ton of sand with sufficient water to hydrate the cement.

6. Mix in a pug mill using not less than 1½ sacks of cement per cubic yard of mixture with sufficient water to hydrate the cement.

III. EXECUTION

A. Excavation

1. Excavation work shall be unclassified and includes removal of all types of materials encountered without exception. Make excavations to lines and grades indicated on Plans and/or Exhibits. Complete excavations within the tolerances specified. Perform all work in conformity with the rules and regulations of the Federal Occupational Safety and Health Act.

2. Shoring, Bracing, Dewatering: Provide shoring, bracing and dewatering of excavations required to properly and safely complete the work as shown. Construct shoring and bracing to prevent the excavation from extending beyond specified or indicated limits and to protect workmen. Keep excavations dewatered by drainage, pumps or well points as necessary while work is in progress. Dewatering methods are subject to approval. Remove shoring, bracing and sheathing as excavations are backfilled in a manner to prevent injurious caving.

3. Structures Other than Pipes

a. Wherever practicable cut all footing excavations to neat lines with a tolerance of minus 1-inch or plus 3-inches and place concrete to bear against earth sides. Cut all excavations a sufficient distance from walls, shafts or similar elements of structures to allow for placing and removing forms and for inspection. Make no excavation beyond a vertical plane 3-feet outside of footing lines or wall lines except as shown or specifically authorized.

b. Carry all excavations to the elevations shown and to deeper levels as directed when suitable foundation soils are not encountered at plan depth. Remove all pockets of soft or otherwise unstable soils and replace with concrete or with suitable well compacted soil as directed.

c. Fill all unauthorized excessive excavation with concrete at no change in the contract sum.

d. Protect all open excavations from rainfall or excessive drying. Provide pumps and other equipment as required to keep excavations reasonably free of water at all times and completely free of water during placement of concrete.

e. Do not remove the last 4-inch depth of excavation for slabs or footings until reinforcing steel and concrete are ready to be placed.

B. Backfill

1. Complete backfill to the surface of natural ground or to the lines and grades shown on Plans and/or Exhibits. Except where special materials are requested, use suitable soils from the excavation as backfill material. Do not use peat or other organic matter, silt, muck, debris or similar materials. Deposit backfill in uniform layers and compact each layer as specified.

2. Select Backfill at Structures: Place backfill as promptly as practicable after completion of each structure or portion of a structure. Do not, however, place backfill against concrete walls or similar structures until concrete forms are removed. Remove shoring and bracing as the work progresses. Take care to prevent any wedging action of backfill against the structure. Step cut (bench) or serrate the slopes bounding the excavation as required to prevent wedging.

3. Compacting Backfill: Place material in uniform layers of prescribed maximum thickness and wet or dry the material to approximately optimum moisture content. Compact with power-driven hand tampers to the prescribed density.

   a. Regular and Select Backfill: Place in 8-inch maximum layers, loose measure. Compact to not less than 95 percent of maximum soil density as determined by ASTM D 698, within ± 2 percent of optimum moisture content.

   b. Sand Backfill and Filter Material Backfill: Place in 6-inch maximum layers, loose measure. Compact to not less than 95 percent of maximum soil density as determined by ASTM D 698, within ∀ 3 percent of optimum moisture content.

   c. Cement Stabilized Backfill: Place in 8-inch maximum layers. Compact to a dry density of 95% of ASTM D 698 without additional moisture control. The sand-cement mixture shall produce a minimum unconfined compressive strength of one hundred pounds per square inch (100 psi) in 48 hours when compacted to 95 percent of ASTM D 698 without additional moisture control, cured (ASTM C 31, Hem 9), and tested in accordance with ASTM C 31.

4. Disposal of Excess Material: Dispose of excess or unsuitable material from the excavation off the job site.

**Std. 1/16/89**
**Revised 6/12/17**

# ITEM 2221

# EXCAVATION, TRENCHING AND BACKFILLING FOR UTILITIES

## I. GENERAL

A. Scope: This specification covers excavation and trenching work and shall include the necessary pavement removal and preparation of the site, removal and disposal of all debris, excavation, and trenching as required, handling, storage transportation, and disposal of all excavated material, all necessary sheeting, shoring, and protection work, preparation of sub-grades, pumping and dewatering as necessary or required, protection of adjacent property, backfilling, pipe embedment, pipe abandonment, backfill, maintenance, and other appurtenant work for the installation of underground utilities.

B. Related Work (if utilized in this project)

1. Item 2555 – Water Piping
2. Item 2560 – Sanitary Sewers
3. Item 2600 – Repair of Asphalt Paving
4. Item 15061 – Steel Piping and Fittings
5. Item 15062 – Ductile Iron Pipe and Fittings
6. Item 15064 – Plastic Piping and Fittings (4-Inches or Smaller)

C. Existing Utilities: The Plans and/or Exhibits show the approximate location of all known underground utilities, foreign pipe lines and structures. No guarantee is made that all such obstructions have been found and located, unknown lines may be encountered. The trench shall be excavated well ahead of the pipe laying operations to expose underground utilities, foreign pipe lines and structures. The Contractor shall employ skilled operators and proceed with caution at all times. Upon encountering such an obstruction the Contractor shall immediately notify the Engineer and the Owner. If the encounter results in damage of the nature that may endanger the public, he shall take such emergency measures as appropriate to notify the affected public, and to mitigate the danger. If the obstruction conflicts with the proposed work, he shall stop work until directions are given by the Engineer. Avoid damage to utilities and foreign pipe lines throughout all operations.

D. Pavement Protection: All tracked construction equipment shall have tracks fitted with suitable pads to minimize damage to pavement. Those not so fitted may be driven across pavement surfaces only when suitable planking or mats are interposed between track and pavement, or when pavement is protected by suitable layer of earth. All construction operations shall be conducted so to minimize damage to pavement other than that scheduled for removal. All such damage shall be repaired by the Contractor restoring damaged areas to as near original condition as practical.

E. Blasting will not be permitted without specific written approval from the Engineer.

## II. MATERIALS

A. Earth Backfill (EF): Where no other backfill is specified, use suitable soils from the excavation as backfill material. Bedding and backfill material shall be free of roots, trash, mud balls and conform to the following limits for deleterious materials:

1. Clay Lumps: Less than 0.5 percent when tested in accordance with ASTM C142.

2. Lightweight Pieces: Less than 5 percent when tested in accordance with ASTM C123.

3. Organic Impurities: No color darker than standard color when tested in accordance with ASTM C40.

B. Sand Backfill (BS): Where sand backfill is required, Contractor may select, unless specified on Plans and/or Exhibits, sand backfill depending upon availability from the following:

1. Bank Run Sand: Durable bank run sand classified as SP, SW, or SM by the Unified Soil Classification System (ASTM D2487) meeting the following requirements:

a. Less than 15 percent passing the number 200 sieve when tested in accordance with ASTM C136.

b. Material passing the number 40 sieve shall meet the following requirements when tested in accordance with ASTM D4318:

1) Liquid limit not exceeding 25.

2) Plasticity index not exceeding 7.

2. Concrete Sand: Natural sand, manufactured sand, or a combination of natural and manufactured sand conforming to the requirements of ASTM C33 and graded within the following limits when tested in accordance with ASTM C136:

| Sieve | Percent Passing |
|---|---|
| 3/8 inch | 100 |
| No. 4 | 95 to 100 |
| No. 8 | 80 to 100 |
| No. 16 | 50 to 85 |
| No. 30 | 25 to 60 |
| No. 50 | 10 to 30 |
| No. 100 | 2 to 10 |

3. Gem Sand: Sand conforming to the requirements of ASTM C33 for course aggregates specified for number 8 size and graded within the following limits when tested in accordance with ASTM C136:

| Sieve | Percent Passing |
|---|---|
| 3/8 inch | 95 to 100 |
| ¼ inch | 60 to 80 |
| No. 4 | 15 to 40 |
| No. 10 | 0 to 5 |

C. Select Fill (ES): Select fill shall be lean clay to sandy, lean clay soil with a maximum liquid limit of 35 and a PI range of 8 to 20 and minimum of 60 percent passing the No. 200 sieve. Select fill may consist of lime stabilized soils excavated on site. Lime stabilization of 8-inch loose lifts should be performed by blending 25 pounds of hydrated lime per square yard into each 8-inch loose lift of fill soils.

D. Aggregate Bedding (AB): Where aggregate bedding is required, Contractor may select, unless specified on Plans and/or Exhibits, aggregate bedding for trench stabilization or backfill depending on availability from the following:

1. Pea Gravel: Durable particles composed of small, smooth, rounded stones or pebbles and graded within the following limits when tested in accordance with ASTM C136:

| Sieve | Percent Passing |
|---|---|
| ½ inch | 100 |
| 3/8 inch | 85 to 100 |
| No. 4 | 10 to 30 |
| No. 8 | 0 to 10 |
| No. 16 | 0 to 5 |

2. Crushed Aggregates: All crushed aggregates consist of durable particles obtained from an approved source and meeting the following requirements:

a. All materials of one product delivered for the same construction activity from a single source.

b. Non-plastic fines

c. Los Angeles abrasion test wear not exceeding 40 percent when tested in accordance with ASTM C131.

d. Gradations, as determined in accordance with Tex-110-E.

| Sieve | Percent Passing by Weight for Pipe Embedment By Ranges of Nominal Pipe Sizes | | |
|---|---|---|---|
| | **>15"** | **15" - 8"** | **<8"** |
| 1" | 95 - 100 | 100 | - |
| ¾" | 60 - 90 | 90 - 100 | 100 |
| ½" | 25 - 60 | - | 90 - 100 |
| 3/8" | - | 20 - 55 | 40 - 70 |
| No. 4 | 0 - 5 | 0 - 10 | 0 - 15 |
| No. 8 | - | 0 - 5 | 0 - 5 |

e. Crushed Stone: Produced from oversize quarried aggregate, sized by crushing from a naturally occurring single source. Crushed gravel or uncrushed gravel are not acceptable material for utility embedment.

f. Crushed Concrete: Crushed concrete is an acceptable substitute for crushed stone as utility backfill. Gradation and quality control test requirements are the same as crushed stone. Provide crushed concrete produced from normal weight concrete of uniform quality; containing particles of aggregate and cement material, free from other substances such as asphalt, base course material, reinforcing steel fragments, soil, debris, or deteriorated concrete fragments.

E. Cement Stabilized Backfill

1. Cement stabilized sand shall be used for backfill and bedding as called for on the Plans and/or Exhibits or as directed by the Engineer.

2. Cement shall consist of Type I portland cement conforming to ASTM C150.

3. Sand shall be clean, durable sand containing not more than the following:

a. Deleterious Materials

1) Clay lumps, ASTM C142; less than 0.5 percent

2) Lightweight pieces, ASTM C123; less than 5.0 percent

3) Organic impurities, ASTM C40; shall not show a color darker than the standard color.

b. Plasticity index shall be six (6) or less when tested in accordance with ASTM D4318.

4. Water shall be potable, free of oils, acids, alkalis, organic matter or other deleterious substances.

5. Sand-cement mixture product shall consist of the proper percentage of cement per cubic yard or per ton of sand with sufficient water to hydrate the cement.

6. Mix in a pug mill using not less than 2 sacks of cement per ton of mixture with sufficient water to hydrate the cement.

III. EXECUTION

A. Preparation

1. Any clearing and grubbing required shall have been performed pursuant to the appropriate Item.

2. Where concrete or asphalt pavement is to be cut; true saw cuts defining the area to be removed shall have been made (a parallel pavement joint may be used as one boundary), and the pavement broken into pieces suitable for handling by excavating equipment.

3. Layout staking of the utility line shall have been made with adequate definition of alignment and grade of the particular portion to be laid.

4. Utility line materials (Pipe and fittings, conduits, etc.) shall be on site prior to excavation for its placement.

5. Bedding materials and any special backfill material shall be on site, or delivery arrangements definitely made with a reliable source.

6. Any permits pertinent to work to be performed are to be on site. All required notifications shall have been made and any special inspection forces on site or proper and arrangement therefore made.

B. Excavation

1. The trench for the utility line or appurtenance shall be excavated on the given alignment to the grade indicated on Plans and/or Exhibits, minimum cover requirements and construction to govern. Trench sides shall be as near vertical as practical considering wall stability and need for safety. From the bottom of the trench to the top at the proposed pipe, the wall shall be near vertical with slopes, if any, above this level. Where conditions require, vertical wall shall be shored or sheeted and braced. It is the Contractor's responsibility to fully comply with all OSHA safety requirements. Sheeting or sheet piling to be employed if necessary for trench wall stability.

2. Excavated material suitable for backfilling to be piled as far as practical from edge of ditch, to increase soil stability and allow working room for pipe-laying operations. Excess material is to be removed from the trench bank as soon as practical. Excess is to belong to Contractor and disposition is his responsibility. Placement of excavated material on adjacent private property without written consent of Owner is prohibited. The written consent shall specifically absolve the Owner and Engineer of any liability in regard to such placement. Excavation material may be placed in existing drainage ditches subject to the following restrictions:

a. Bypass piping is to be provided.

b. Standing water in such ditch to be removed.

c. Rain does not appear to be imminent.

d. Ability is to be demonstrated that the earth can be removed in a short time if rain does occur during the day, including access for earth-moving equipment.

e. All such earth is to be removed before the working day is over and the drainage capacity of the ditch fully restored. Sidewalks are not to be blocked with earth unless approved substitute passage and access is provided.

3. Where trenches are scheduled to be partly or totally in the drainage ditch, the requirements given in the preceding paragraph shall apply. Work shall not be undertaken when rain is threatening. Should rain threaten during the work day, the drainage capacity of the ditch shall be immediately restored and maintained, and the trench backfilled. Full drainage capacity shall be restored at the end of each working day. Any liabilities resulting from drainage obstructions created by construction operations shall occur solely to the Contractor.

C. Trench Water

1. Where practical, ground surfaces shall be graded or diked to prevent the entry of surface water into the open trench.

2. Ground water entering the open trench from the walls and from a firm bottom in small quantities is to be promptly removed by trench pumps. Multiple pumps in good operating order shall be kept on the excavation site for such purposes at all times. Under such trench conditions, the rough excavation grades to drain to the pumps prior to under-bedding placement, with suitable screening to exclude sand from pump suction. Other methods may be employed by the Contractor to achieve the required results. The water level shall be maintained below the pipe invert until full compaction of the pipe bedding can be and is accomplished.

3. In the event that trench pumps are unable to maintain the required level, or, if the water entry is from the bottom of the excavation in such quantities as to make the bottom unstable, or, from the sides in such quantities as to make the walls unstable, then the Contractor shall provide and operate an effective well point system to dewater the trench to the required pipe laying conditions.

4. Water removed from trenches, from drainage ditches and by well points shall be conveyed to the Owner's drainage system (pipe or ditch) and not discharged upon the roadway, sidewalk or private property in such a manner as not to create damages or public nuisance.

5. Dewatering or well point systems shall be placed and operated so as to minimize inconvenience and annoyance to public, mechanical equipment shall be housed or shielded to minimize noise; engines are to be provided with efficient noise mufflers. Points and headers shall not block pedestrian and vehicular access to adjacent property. Location of pumping units to be chosen for minimum disturbance. Site to be promptly restored to original condition after point removal.

D. Pipe Embedment, General: Pipe materials, handling and joining, cable and utility appurtenances are covered in other sections of these specifications. These work elements are to be closely coordinated with the trench excavation, trench backfill, and with embedment placement.

E. Pipe Embedment: Concrete Steel Cylinder, Corrugated Metal Pipe, Reinforced Concrete Pipe, Cast Iron, Ductile Iron, Vitrified Clay, PVC Pipe, Reinforced Plastic Mortar, Steel.

1. After trenching to rough grade, and trench water removal arrangements are made, the prescribed underbedment, using the dry material of type specified (stabilized sand, bank sand, etc.) and minimum depth shown on details this Item and/or specified herein, is to be placed across the width of the trench and approximately to the grade of the bottom of the pipe, with bell hole left open and additional material on sides. Additional dry, loose material is to be placed in uniformly spaced amounts along pipe (clearing sling points, if any, and bell holes) sufficient to support lower quadrant of pipe barrel for 30 percent or more of its length. The pipe is to be lowered into the trench, aligned, positioned so spigot end is just outside bell and lowered against sand. It is to be checked for vertical alignment of spigot vs. bell and for gradient. The length is to be worked into true alignment and gradient by "bumping", and/or adding or removing underbedment material, so pipe is uniformly supported, under its own weight, for the lower quadrant for not less than 80 percent of its length. The pipe piece is then to be moved horizontally (axially) to make up joint, and additional underbedment material promptly worked under the pipe and tamped to provide support for its lower 1/3 for its entire length. Joint is to be checked for make-up, and exterior protection placement commenced. Pipe bedding material placement to continue, and pipe shall be solidly anchored against axial movement before next joint is made-up. Remaining bedding and backfill placing to continue until complete. Trench water not to be allowed to rise appreciably until bedding level is above spring line of pipe.

2. Bedding placement on sides and top to be in layers of 8-inch maximum thickness and mechanically compacted. Placement shall be made on both sides of pipe in such a manner that pipe is not moved horizontally or vertically by placement or compaction.

3. Bank sand placement on sides and top to be in layers of 8-inch maximum thickness and mechanically compacted to not less than 90% of Texas State Department of Highways and Public Transportation test method TEX-113-E within ± 3 percent of optimum moisture content. Placement shall be made on both sides of pipe in such a manner that pipe is not moved horizontally or vertically by placement or compaction.

F. Pipe Embedment, 3-Inches and Smaller Water Lines: Small diameter pipe lines not shown to be on a specific grade may be laid on 2-inch loose fill in ditch bottom, and stabilized with loose materials placed sides and top to cover pipe not less than 6-inches, then backfilled.

G. Backfill (Normal, Select or Regular)

1. Where excavation has been by ladder or wheel trenchers, or:

2. Where excavation by other types of equipment has resulted in clods not larger than 10-inches in largest dimension, and where excavated materials have been separated into "suitable" and "non-suitable", the surface excavated material (or select imported substitute material) may be pushed into the trench in layers not thicker than 12-inches and compacted. Where excavation has resulted in large clods:

   a. The clods are to be removed from the trench area and select imported material substituted therefor, or

   b. The clods are to be reduced to not greater than allowed above, and adequate finer material sufficient to fill voids between large clods provided. Highly-organic excavated material is to be considered "unsuitable" and excluded from the backfill.

3. Each layer of the backfill is to be mechanically compacted, to densities per ASTM D698 (standard proctor) within ± 3 percent of optimum moisture content. Reopen trenches inadequately compacted and recompact.

4. Backfill shall be hand placed and compacted under lines crossing the trench, steep slopes, valves, valve boxes, service connections, manholes, inlets and other appurtenances and specials.

5. Any trench settlement to be promptly filled, all trenches to be given final dressing immediately after settlement.

6. Final clean-up to follow backfill operation within 48 hours of construction or earlier if directed by the Engineer.

H. Backfill (Under Roadways and Driveways)

1. Where utility line excavation is open cut across a roadway or driveway, the backfill from top of bedding to bottom of future pavement restoration to be made with cement stabilized sand. The material is to be fresh (mixed not more than 3 hours before final placement). It is to be placed in layers not exceeding 10-inches depth (loose measure) and mechanically compacted from the bottom to top to minimum density not less than 95 percent of optimum, ASTM D698.

2. The surface of the material is to be dampened and covered with polyethylene or otherwise prevented from drying, for 72 hours. Wood bridges or steel plates shall be positioned to permit vehicular traffic, with the remaining portion barricaded for the curing period. After 3 days, the space for future surfacing may be temporarily filled with limestone until pavement restoration is begun and/or restoration undertaken immediately.

I. Crossing Existing Utility and Foreign Lines

1. Where existing utility or pipe lines are found crossing the route of the proposed utility line and are one "main" diameter or more above the proposed utility on undisturbed soil, the Contractor shall "jump" the crossing main with the excavating machinery, leaving a minimum of 1 foot of undisturbed area on each side of the crossing pipe. An opening for the proposed utility is to be tunneled under the crossing pipe line, and the proposed utility carefully threaded through. The crossing line is to be protected from damage at all times. In the event the undisturbed soil is found to be unstable, or if the Engineer decides support is required because of the nature or configuration of the pipe, the Contractor shall:

   a. Excavate down to the crossing line;

   b. Provide a temporary strong-back support; and/or

   c. Provide a reinforced concrete cradle across trench adequately supported to carry crossing pipe and backfill.

2. Where existing utilities or pipe lines are encountered in grade, subject to the approval of the Engineer and conditions of paragraph 1 above, the Contractor shall:

a. Adjust the grade of the proposed utility to clear the existing utility.

b. Remove and replace the existing utility in a manner shown on the Plans and/or Exhibits or as approved by the Owner of the existing utility.

J. Removing and Replacing Culverts: Where it is necessary to remove culverts in order to install the proposed utility, the Contractor may at his option:

1. Remove and waste the existing pipe, replacing with new, equivalent pipe, or,

2. Salvage existing pipe in good condition and relay. New pipe shall be substituted for damaged pipe at the Contractor's expense. The re-laid culvert shall be of the same length, same depth, same location as original, and in no way inferior to the original. No extra pay will be allowed for replacement of damaged culvert pipe whether or not was caused by Contractor.

K. Miscellaneous Precautions, Restoration of Damages

1. Contractor shall at all times be vigilant in observing overhead electric power and communication equipment.

2. Damage to overhanging tree limbs shall also be avoided.

3. Damage to pavement curbing is to be avoided. If such are damaged, the damaged section from joint shall be removed and replaced with curb of like material, dimension, texture and finish.

L. Test for Displacement of Sewers: After the trench has been backfilled to 2-feet above the pipe and tamped as specified, check the alignment as follows. Flash a light through the sewer between manholes. Use a flashlight or reflect sunlight with a mirror. If the illuminated interior of the pipe line shows poor alignment, pipe displacement, or other defects, remedy them satisfactorily.

M. Deflection Test of Thermoplastic Pipe (PVC, etc.): Deflection test shall not be performed before 30 days have passed after backfill (installation), but must occur prior to final acceptance. All thermoplastic lines shall be tested by pulling a mandrel or approved deflectometer through the line. All sections indicating five percent (5%) deflection or more shall be removed, reinstalled, and retested for leakage and deflection. A drawing of a typical testing mandrel follows.

IV: PIPE ABANDONMENT

A. Description: This specification shall govern all work and materials required for grouting abandoned utility lines.

B. Materials:

1. Raw Soil: Soil shall be typical clayey soil of the area. It shall be from the project site or other approved source not suspected of being contaminated. The soil shall have a Plasticity Index over 15 and a Liquid Limit not to exceed 65.

2. Lime: Lime shall be hydrated lime, calcium hydroxide, in accordance with AASHTO M 216.

3. Water: Water shall be potable.

C. Construction Methods:

1. Mix Design: The following is given as a typical mix design for trial mix. The mix design is based on damp soil with initial water content of about 15%. The proportions of soil and lime shall not be altered. The Contractor shall determine the amount of water to be added as required to produce a mix at its liquid limit.

a. Trial Mix Design:

| | |
|---|---|
| Damp Soil | 1,000 lb. |
| Lime | 50 lb. |
| Water (Approximate) | 48 gal. |

Consistency shall be checked with liquid limit apparatus.

2. Placement: The Contractor shall grout abandoned lines as indicated on the drawings. Temporary pumping and venting ports shall be placed as required to provide complete filling of the abandoned line and proper placement of the grout. If segregation or “sand packing” is experienced during pumping, the Contractor shall reduce water content of mix or obtain other soil source, as required. Any damage resulting from pumping operation shall be repaired at the Contractor’s expense.

D. Measurement & Payment:

Unless indicated otherwise in the Proposal, Grouting Abandoned Utility Lines shall be measured by the linear foot. Payment shall include all equipment, materials and incidentals required to mix, transport, and place the grout and restore surface at pump ports.

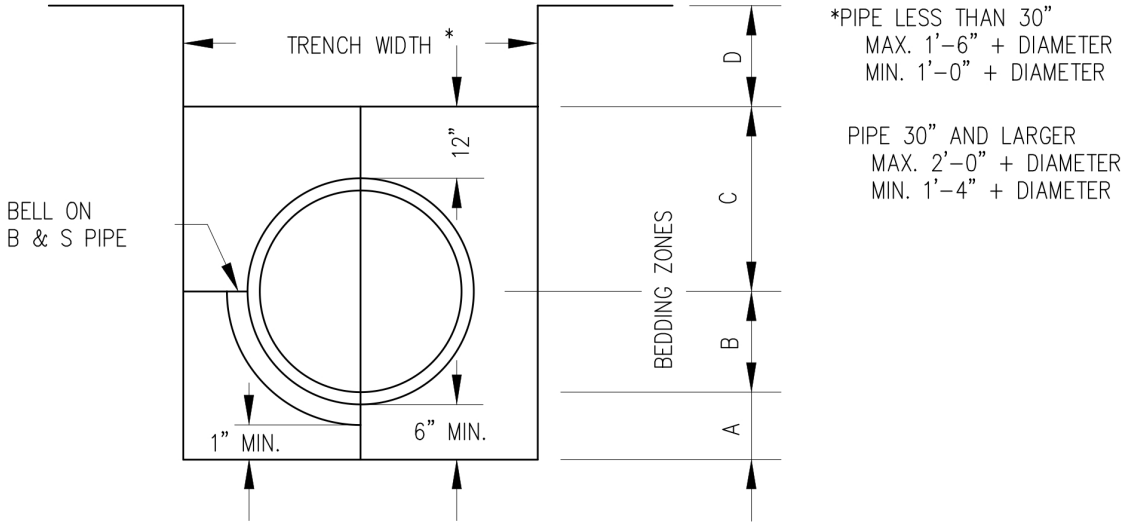


| | BEDDING ZONES | | | | |
|---|---|---|---|---|---|
| PIPE MATERIAL | A | B | C | D (EARTHEN OR UNPAVED) | D (ASPHALT OR CONCRETE) |
| CORRUGATED METAL PIPE | CS | CS | CS | EF | CS |
| REINFORCED CONCRETE PIPE | CS | CS | CS | EF | CS |
| DUCTILE IRON (PRESSURE PIPE) | BS | BS | BS | EF | CS |
| DUCTILE IRON (GRAVITY PIPE) | CS | CS | CS | EF | CS |
| PVC (PRESSURE PIPE) | BS | BS | BS | EF | CS |
| PVC (GRAVITY PIPE) | CS | CS | CS | EF | CS |
| STEEL | BS | BS | BS | EF | CS |

BS- BANKSAND.
AB- AGGREGATE BEDDING.
ES- SELECT EARTH FILL PLACED SAME DAY AS PIPE IS LAID.
EF- EARTH FILL PLACED NEXT DAY (OR LATER) AFTER PIPE IS LAID.
CS- CEMENT STABILIZED SAND.

ORDINARY TRENCH
EMBEDMENT & BACKFILL DETAIL

N.T.S.

TYPICAL
GO, NO-GO DEFLECTION TESTING MANDREL
CONSTRUCTED FROM 1/2-INCH ANGLE IRON

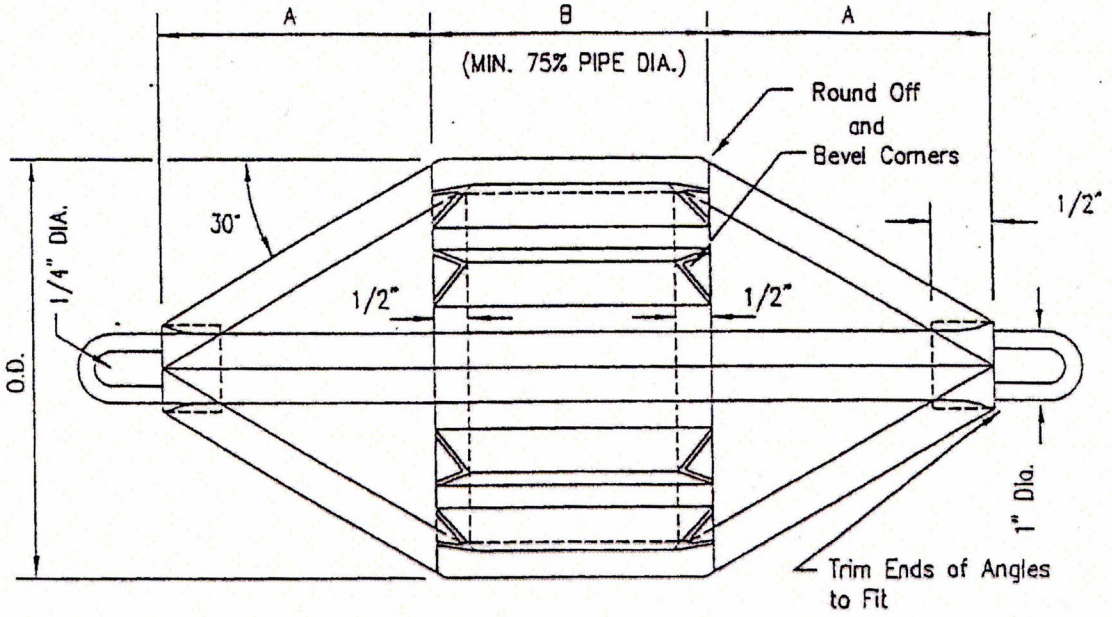


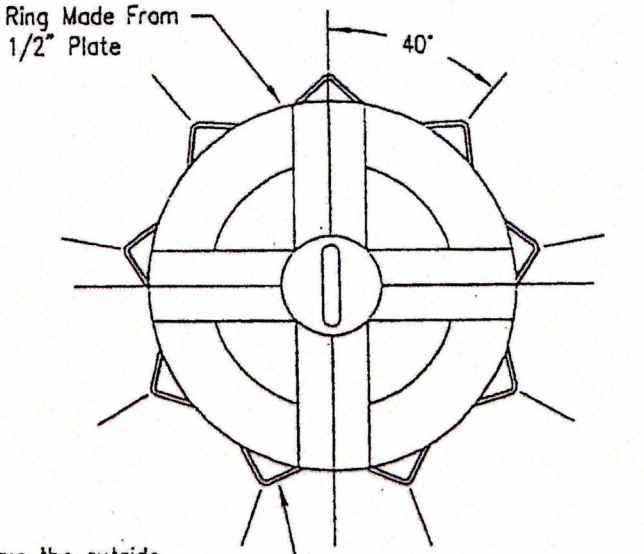


| SIZE | A (inches) | B (inches) |
|---|---|---|
| 4 | 3.0 | 4 |
| 6 | 4.0 | 4.5 |
| 8 | 5.3 | 6 |
| 10 | 6.7 | 7.5 |
| 12 | 8.0 | 9 |
| 15 | 10.0 | 11.5 |

NOTE:
After welding is completed, true the outside diameter dimension for the full length of "B" to 95% ± 0.010" of original inside diameter of pipe being tested.

MANDREL
NOT TO SCALE

**Std. 1/13/86**
**Revised 10/1/02**

# ITEM 2223

# CRUSHED LIMESTONE BEDDING

## I. GENERAL

A. Scope: Furnish and install crushed limestone bedding when ordered for stabilization of trench, or as shown on Plans and/or Exhibits.

B. Related Work (if utilized in this project)

1. Pipe: Per applicable Item

2. Item 2221 - Excavation, Trenching, and Backfilling for Utilities

## II. MATERIALS

A. Use crushed stone with its natural binder or other approved fine aggregate. Crushed stone to have not more than 50 percent wear (AASHTO T-96-74). Gradation as follows:

| **Retained on** | **Percent by Weight** |
|---|---|
| 1-Inch Square Sieve | 0 - 10 |
| ½-Inch Square Sieve | 15 - 40 |
| No. 4 Square Sieve | 45 - 65 |
| No. 40 Square Sieve | 70 - 85 |

Aggregate to meet Texas Highway Department Wet Ball Mill Test, TEX-116-E.

B. Material passing No. 40 sieve to be soil binder and meet following requirements when tested by current ASTM Standards.

1. Plasticity index not to exceed 10.

2. Liquid limit not to exceed 35.

III. EXECUTION

A. Excavate trench to provide at least six inches clearance below pipe. Replace excavation below subgrade with crushed limestone bedding under barrel of pipe, and sufficient additional thickness of the bedding material for full width of trench on each side of pipe, to fit lower part of pipe exterior for at least 50 percent of pipe breadth. Tamp and grade bedding to assure uniform bearing of pipe barrel. After pipe is firmly installed on bedding to grade and alignment, carefully place crushed limestone bedding in layers of maximum 4" thick, compacting each to 85% Proctor Density (AASHTO T-99), up to a depth above top of pipe as shown on Plans and/or Exhibits. Complete backfill in accordance with other applicable specifications.

**Std. 1/22/96**
**Revised 10/1/02**

# ITEM 2227

# WASTE MATERIAL DISPOSAL

## I. GENERAL

A. Scope: Waste material disposal consist of disposal of trees, stumps, logs, brush, roots, grass, vegetation, humus, rubbish and other objectionable matter from operations such as clearing and grubbing, excavation, grading and sanitary sewer cleaning. Unless otherwise specified, the Contractor is responsible for removal and disposal of waste material.

B. Payment: No separate payment will be made. Include cost of work in contract bid prices.

C. Related Work (if utilized in this project)

1. Item 2102 - Clearing and Grubbing

2. Item 2221 - Excavation, Trenching and Backfilling for Utilities

## II. MATERIALS

Specific materials are not required. Use equipment and materials necessary to properly complete disposal of waste materials.

## III. EXECUTION

Disposal Area: Waste materials must be removed from the work site and disposed of in a manner not to damage the Owner or other persons. All waste materials become the property of the Contractor.

**Std. 8/12/85**
**Revised 10/1/02**

# ITEM 2232

# CEMENT STABILIZED BASE

## I. GENERAL

This Item shall consist of a foundation for surface course or for other base courses; shall be composed of a mixture of flexible base material, Portland cement and water; and shall be constructed as herein specified and in conformity with the typical cross sections shown on the Plans and/or Exhibits and to the lines and grades established by Engineer.

## II. MATERIALS

A. Portland Cement: Cement shall be either Type I, II, or III Portland cement conforming to the Item 2553 - Hydraulic Cement Reconstruction.

B. Water: Water shall meet the requirements of water for the Item 2515 - Concrete Pavement.

C. Base Materials: The base material shall consist of durable coarse aggregate particles of shell, band run gravel, processed gravel, iron ore gravel, crushed stone or crushed blast furnace slag combined with approved binder material. Local material sources shall be approved prior to use. Material pits shall be opened up in such a manner as to expose the vertical faces of the various strata of acceptable material and unless otherwise directed, the material shall be secured in successive vertical cuts extending through all of the exposed strata in order that a uniformly mixed material is secured.

The base material, when tested, shall meet the following requirements unless otherwise specified on the Plans and/or Exhibits:

| Type | A | B | C | D | E | F | G |
|---|---|---|---|---|---|---|---|
| Square Sieve | Iron Sand Shell | Ore Gravel | Processed Crushed Stone | Crushed Blast Gravel Gr. 1 Gr.2 | Bank-Furnace Slag | As Shown run Gravel | On Plans |
| | | | **PERCENTAGE RETAINED, SIEVES** | | | | |
| 2-½" | | 0 | | | | | |
| 1-¾" | | | 0-10 | 0-5 | 0 | 0-5 | |
| 1-¼" | 0-10 | | | 0 | | | |
| d" | | | | | 25-45 | | |
| No.4 | 30-65 | | 45-75 | 30-75 | 15-35 | 45-65 | 30-75 |
| No.4 | 50-65 | 45-65 | 55-80 | 60-85 | 55-85 | 70-85 | 65-85 |

The material passing the No. 40 sieve shall be known as "Soil Binder" and unless otherwise shown on Plans and/or Exhibits shall meet the following requirements when tested in accordance with Test Method Tex-106-E:

The Plasticity Index shall not exceed 10.
The Liquid Limit shall not exceed 35.

Unless otherwise indicated on the Plans and/or Exhibits, when the type of cement stabilized base is not specified, the Contractor may select any of the foregoing materials as aggregate for use in construction of cement stabilized base.

## III. EXECUTION

A. Preparation of Subgrade. The roadbed shall be excavated and shaped in conformity with the typical sections shown on the Plans and/or Exhibits to the lines and grades established by the Engineer. All unstable or otherwise objectional material or roots shall be removed from the subgrade and replaced with approval material. All holes, ruts, and depressions shall be filled with approved material and, if required, the subgrade shall be thoroughly wetted with water and reshaped and rolled to the extent directed in order to place the subgrade in an acceptable condition to receive the base material. The surface of the subgrade shall be finished to lines and grades as established and shall be in conformity with the typical sections shown on the Plans and/or Exhibits. A subgrade planer may be used. Any deviation in excess of ½-inch in cross section and in length of 16-feet measured longitudinally shall be corrected by loosening, adding or removing material, reshaping and compacting by sprinkling and rolling. Sufficient subgrade shall be prepared in advance to ensure

satisfactory prosecution of the work. Material excavated in preparation of the subgrade shall be utilized in the construction of adjacent shoulders and slopes or otherwise disposed of as directed.

B. Application of Cement (Roadmix): Portland cement shall be spread uniformly on the base or subbase at the rate specified on the Plans and/or Exhibits or approved by the Engineer. If a bulk cement spreader is used, it shall be positioned by string lines or other approved method during spreading to ensure a uniform distribution of cement.

Cement shall be applied only to such an area that all the operations can be continuous and completed in daylight within 6 hours of such application.

The percentage of moisture in the base or subbase material, at the time of cement application, shall not exceed the quantity that will permit uniform and intimate and cement during dry mixing operations, and it shall not exceed the specified optimum moisture content for the Portland cement treatment mixture. The determination of moisture content shall be in accordance with Test Method Tex-103-E.

No equipment, except that used in spreading and mixing, will be allowed to pass over the freshly spread cement until it is mixed with the base or subbase material.

C. Mixing and Processing: Unless otherwise shown on the Plans and/or Exhibits, either method 1, 2, or 3 below may be used at the option of the Contractor.

1. Multiple-Pass Traveling Mixing Plant: After the cement has been applied it shall be dry-mixed with the base or subbase material. Mixing shall continue until the cement has been sufficiently blended with the base or subbase material to prevent the formation of cement balls when water is applied. Any mixture that has not been compacted and finished shall not remain undisturbed for more than 30 minutes.

   Immediately after the dry mixing of base or subbase material and cement is complete, water as necessary shall be uniformly applied and incorporated into the mixture. Pressurized equipment and supply provided shall be adequate to insure continuous application of the required amount of water to sections being processed within 3 hours of application of the cement. Proper care shall be exercised to insure proper moisture distribution at all times. After the last increment of water has been added, mixing shall continue until a thorough and uniform mix has been obtained.

2. Single-Pass Traveling Mixing Plant. After the cement has been applied it shall be sufficiently dry-mixed with the base or subbase material to prevent the formation of cement balls when water is applied. Unpulverized soil lumps in the Portland cement treatment mixture immediately behind the mixer that are dry will not be allowed. Should this condition prevail the

Contractor shall "Pre-wet" the raw base or subbase material as necessary to correct this condition.

The mixer shall be provided with means for visibly and accurately gauging the water application. The water shall be applied uniformly through a pressure spray bar.

After cement is spread, mixing operations shall proceed as follows: The mixer shall in one continuous operation mix the air-dry base or subbase material and cement full depth, add the required moisture uniformly, thoroughly moist-mix the base or subbase material, cement and water, spread the completed Portland cement treatment mixture evenly the machine proceed width of the subgrade and leave it in a loose condition ready for immediate compaction.

The Portland cement treatment for base and subbase mixture shall not remain undisturbed, after mixing and before compacting, for more than 30 minutes.

3. Central Mixing Plant: The base or subbase material and cement shall be dry-mixed in a pug mill of either the batch or continuous-flow type. The Plant shall be equipped with feeding and metering devices which will add the base or subbase material, cement and water into the mixer in the specified quantities. Base or subbase material and cement shall be mixed sufficiently to prevent cement balls from forming when water is added. Mixing shall continue until a uniform and intimate mixture of base or subbase material, cement and water is obtained.

   The mixture shall be hauled to the construction site in suitable vehicles equipped with protective covers. The mixture shall be placed on the moistened subgrade in a uniform layer by an approved spreader or spreaders. Not more than 30 minutes shall elapse between the placement of Portland cement treatment in adjacent lanes at any location except at longitudinal construction joints. Not more than 30 minutes shall elapse between the start of spreading the base or subbase material and cement mixture and the start of compaction. Not more than 60 minutes shall elapse between the start of moist mixing and the start of compaction of soil cement. The layer of Portland cement treatment shall be uniform in thickness and surface contour, and in such quantity that the completed base will conform to the required grade, cross section and governing base or subbase specification. Dumping of the mixture in piles or windrows upon the subgrade will not be permitted.

D. Compaction and Finishing: The material shall be compacted to not less than the density shown on the Plans and/or Exhibits. At the start of compaction, the percentage of moisture in the mixture and in unpulverized soil lumps, based on

oven-dry weights, shall not be below or more than two percentage points above the specified optimum moisture content, and shall be less than that quantity which will cause the Portland cement treatment mixture to become unstable during compaction and finishing. When the uncompacted mixture is wetted by rain so that the average moisture content exceeds the tolerance given at the time of final compaction, the entire section shall be reconstructed in accordance with this specification at the sole expense of the Contractor.

Prior to the beginning of compaction, the mixture shall be in loose condition for its full depth. The loose mixture then shall be uniformly compacted to the specified density within 2 hours.

After the base or subbase material and cement mixture, excepting the top mulch, is compacted, water shall be uniformly applied as needed and thoroughly mixed in with a spike tooth harrow or equal. The surface shall then be reshaped to the required lines, grades and cross section and then lightly scarified to loosen any imprint left by the compacting or shaping equipment.

The resulting surface shall be thoroughly rolled with a pneumatic tire roller and "clipped," "skinned," or "tight bladed" by a power grader to a depth of approximately ¼-inch, removing all loosened soil and cement from the section.

The surface shall then be thoroughly compacted with the pneumatic tire roller, adding small increments of moisture as needed during rolling. If plus No. 4 aggregate is present in the mixture, one complete coverage of the section with the flat wheel roller shall be made immediately after "clipping" operation. When directed by the Engineer, surface finishing methods may be varied from this procedure provided a dense, uniform surface, free of surface compaction planes, is produced. The moisture content of the surface material must be maintained at its specified optimum during all finishing operations. Surface compaction and finishing shall proceed in such a manner as to produce, in not more than 2 hours, a smooth, closely knit surface, free of cracks, ridges, or lose material conforming to the crown, grade and line shown on the Plans and/or Exhibits.

E. Curing

1. Protection and Cover: After the Portland cement treatment for base or subbase course has been finished as specified herein, the surface shall be protected against rapid drying by either of the following curing methods for a period as shown on Plans and/or Exhibits but in no case less than 3 days or until the surface or an additional base course is placed:

    a. Maintain in a thorough and continuously moist condition by sprinkling.

b. Apply a 2-inch layer of earth on the completed course and maintain in a moist condition.

c. Apply an asphalt membrane to the course, immediately after same is completed. Unless otherwise shown on the Plans and/or Exhibits, the asphalt shall be RC-250, in accordance with the Item, "Asphalt, Oils, and Emulsions." The asphalt shall completely cover and seal the total surface of the base and fill all voids. If the Contractor elects to use this method, it shall be his responsibility to protect the asphalt membrane from being picked up by traffic by either sanding or dusting the surface of same. The asphalt membrane may remain in place when the proposed surface or other base courses are placed.

2. Surface: The surface or other base courses may be applied on the finished section as soon after completion as operations will permit.

F. Construction Joints: At the end of each day's construction a straight transverse construction joint shall be formed by cutting back into the total width of completed work to form a true vertical face free of loose and shattered material.

Portland cement treatment for base or subbase for large, wide areas shall be built in a series of parallel lanes of convenient length and width meeting the approval of the Engineer.

G. Traffic: Completed sections of Portland cement treatment may be opened immediately to local traffic and to construction equipment, and to all traffic after the curing period, provided the mixture has hardened sufficiently to prevent marring or distorting the surface by equipment or traffic.

H. Maintenance: The Contractor shall be required, within the limits of his contract, to maintain the Portland cement treatment in good condition until all work has been completed and accepted. Maintenance shall include immediate repairs of any defects that may occur. This work shall be done by the Contractor at his own expense and repeated as often as may be necessary to keep the area continuously intact. Faulty work shall be replaced for the full depth of treatment. It is the intent of this specification that the Contractor construct the plan depth of cement treated base in one homogeneous mass. The addition of thin stabilized layers to provide the minimum specified depth will not be permitted.

I. Penalty for Deficient Base Thickness: It is the intent of this specification that the cement stabilized base be constructed in strict conformity with the thickness and typical sections shown on Plans and/or Exhibits. Where any such base is found not so constructed, the following rules relative to adjustment of payment for acceptable stabilized base and to replacement of faulty stabilized base shall govern.

1. Base Thickness: The cement stabilized base will be drilled by a Testing Lab prior to final acceptance. The thickness of the base will be determined by measurement of the cores. At such points as the Engineer may select in each unit, one core will be taken for each 1000 square yards of cement stabilized base, or fraction therefore, in the unit. If the core so taken is not deficient more than 0.5-inch from the plan thickness, full payment will be made. If the core is deficient in thickness by more than 0.5-inch but not more than 1.50-inches from the plan thickness, two additional cores will be taken from the area represented and the average of the three cores determined. If the average measurement of these three cores is not deficient more than 0.5-inch from the plan thickness, full payment will be made. If the average thickness of the three cores is deficient more than 0.5-inch, the sections having such deficiencies shall be removed and the base shall be replaced to the specified plan depth.

**Std. 8/12/85**
**Revised 10/1/02**

# ITEM 2234

# FLEXIBLE BASE

## I. GENERAL

This Item shall consist of a foundation course for surface course or for other base courses; shall be composed of either caliche, (Argillaceous limestone, calcareous clay particles, with or without stone, conglomerate, gravel, sand, or other granular materials), crushed stone, gravel, iron ore topsoil, shell, etc.; and shall be constructed as herein specified in one or more courses in conformity with the typical sections shown on Plans and/or Exhibits and to the lines and grades as established by the Engineer.

## II. MATERIALS

A. Type A material shall consist of crushed or broken aggregate (Excluding gravel aggregate). Type B material shall consist of gravel aggregate. Type C material shall consist of iron ore topsoil. Type D material shall consist of shell aggregate with sand admixture. Type E material shall consist of caliche. Unless the type of material to be used is specified on the Plans and/or Exhibits, the Contractor may use any one of these types, provided the material proposed for use by the Contractor meets the requirements set forth in the specification test limits tabulation.

B. Grades: It is the intent of this specification that unless otherwise indicated on the Plans and/or Exhibits, the final course of the base material shall consist of Grades 1 or 2 and other base courses or subbase materials may consist of Grades 1, 2, 3, or 4. All grades shall, when tested by standard Department laboratory test procedures, meet the physical requirements as set forth in the specification test limits tabulation.

When pilot grading is required in the Plans and/or Exhibits, the Engineer will designate the grading and allowable tolerances to govern during production. The flexible base produced shall not vary from the designated pilot grading by more than the tolerances specified by the Engineer. The pilot grading may be varied the Engineer as necessary to insure that the base material produced will meet the physical requirements specified.

Testing of flexible base materials shall be in accordance with The State Department of Highways and Public Transportation standard laboratory test procedures.

(Latest Revision):
Preparation for Soil
Constants and Sieve Analysis ..... Tex-101-E
Liquid Limit ..... Tex-104-E
Plastic Limit ..... Tex-105-E
Plasticity Index ..... Tex-106-E
Sieve Analysis ..... Tex-110-E
Wet Ball Mill ..... Tex-116-E
Triaxial Test .....Tex-117-E(Part I or II)

Unless otherwise specified on the Plans and/or Exhibits, samples for testing the material for Soil Constants. Gradation and West Ball Mill shall be taken prior to the compaction operations.

Unless otherwise specified on the Plans and/or Exhibits, samples for triaxial tests shall be taken from the stockpile or from production, as directed by the Engineer, where temporary stockpiling is required and from production where temporary stockpiling is required and from production where temporary stockpiling is not required.

**PHYSICAL REQUIREMENTS FOR FLEXIBLE BASE MATERIALS & GRADES**

**TYPES:**

| Grade 1: (Triaxial Class 1) Min. compressive strength, psi: 45 at 0 psi lateral pressure and 175 at 15 psi lateral pressure | Grade 2: (Triaxial Class 1 to 2.3) Min. compressive strength, psi: 35 at 0 psi lateral pressure and 175 at 15 psi lateral pressure | Grade 3: (Unspecified Triaxial Class) | Grade 4: |
|---|---|---|---|

**TYPE A**

| Retained on Sq. Sieve % | Retained on Sq. Sieve % | Retained on Sq. Sieve % | |
|---|---|---|---|
| 1¾".....0 | 1¾".....0-10 | 1¾" .....0-10 | |
| 7/8".....10-35 | No. 4 .....45-75 | No. 40 ....60-85 | As |
| 3/8".....30-50 | No. 40 ....60-85 | Max LL .....45 | Shown |
| No.4 .....45-65 | Max LL .....40 | Max PI .....15 | on |
| No.40 ....70-85 | Max PI .....12 | Wet | Plans |
| Max LL.....35 | Wet | Ball Mill | |
| Max PI .....10 | Ball Mill | Max. Amt ....55 | |
| Wet | Max. Amt ....50 | Max. Increase | |
| Ball Mill | Max Increase | in Passing | |
| Max. Amt...40 | in Passing | No. 40 .....20 | |
| Max. Increase | No. 40 .....20 | | |
| in Passing | | | |
| No. 40 .....20 | | | |

**TYPE B**

| | Retained on Sq. Sieve % | Retained on Sq. Sieve % | |
|---|---|---|---|
| Gravel Aggregate | 1¾"..... 0-10 | 1¾" ..... 0-5 | As Shown on Plans |
| | No. 4 ..... 30-75 | No. 4 ..... 30-75 | |
| | No. 40 .... 70-85 | No. 40..... 65-85 | |
| | Max LL..... 35 | Max LL ..... 35 | |
| | Max PI ..... 12 | Max PI ..... 12 | |

**TYPE C**

| | Retained on Sq. Sieve % | Retained on Sq. Sieve % | |
|---|---|---|---|
| Iron Ore Topsoil | 2½" ..... 0 | 2½" ..... 0 | As Shown on Plans |
| | No. 40 ... 50-85 | No. 40.... 45-85 | |
| | Max LL ..... 35 | Max LL..... 35 | |
| | Max PI ..... 12 | Max PL..... 12 | |

**TYPE D**

| | Retained on Sq. Sieve % | Retained on Sq. Sieve % | |
|---|---|---|---|
| Sand - Shell | 1¾" ..... 0-10 | 1¾" ..... 0-10 | As Shown on Plans |
| | No.4 ..... 45-65 | No. 40.... 40-65 | |
| | No. 40 .... 50-70 | Max LL..... 35 | |
| | Max LL..... 35 | Max PI ..... 12 | |
| | Max PI ..... 12 | | |

**TYPE E**

| | Retained on Sq. Sieve % | Retained on Sq. Sieve % | |
|---|---|---|---|
| Shell w/Sand & Caliche Admixture | 1¾" ..... 0 | 1¾" ..... 0 | As Shown on Plans |
| | No. 40 ... 45-65 | No.40 .... 45-65 | |
| | Max LL..... 35 | Max LL..... 35 | |
| | Max PI ..... 10 | Max PI ..... 12 | |

**TYPE F**

| | Retained on Sq. Sieve % | Retained on Sq. Sieve % | |
|---|---|---|---|
| Caliche | 1¾" ..... 0 | 1¾" ..... 0 | As Shown on Plans |
| | No. 4 ..... 47-75 | No. 40.. .50-85 | |
| | No. 40 ... 50-85 | Max LL..... 40 | |
| | Max LL..... 40 | Max PI ..... 12 | |
| | Max PI ..... 12 | | |

Tolerance: When Tolerances are permitted by the Plans and/or Exhibits, the limits establishing reasonably close conformity with the specified gradation and plasticity index are defined by the following:

The Engineer may accept the material, providing not more than 2 out of 10 consecutive gradation tests performed are outside the specified limit on any

individual or combination of sieves by no more than 5% and where no two consecutive tests are outside the specified limit.

The Engineer may accept the material providing not more than 2 out of 10 consecutive plasticity index samples tested are outside the specified limit by no more than 2 points and where no two consecutive tests are outside the specified limit.

III. EXECUTION

A. Preparation of Subgrade. The roadbed shall be excavated and shaped in conformity with the typical sections shown on Plans and/or Exhibits and to the lines and grades as established by the Engineer. All unstable or otherwise objectionable material shall be removed from the subgrade and replaced with approved material. All holes, ruts and depressions shall be filled with approved material and, if required, the subgrade shall be thoroughly wetted with water and reshaped and rolled to the extent directed in order to place the subgrade in an acceptable condition to receive the base material. The surface of the subgrade shall be finished to line and grade as established and in conformity with the typical section shown on Plans and/or Exhibits, and any deviation in excess of ½-inch in cross section and in a length of 16-feet measured longitudinally shall be corrected by loosening, adding, or removing material, reshaping and recompacting by sprinkling and rolling. Sufficient subgrade shall be prepared in advance to insure satisfactory prosecution of the work. Material excavated in the preparation of the subgrade shall be utilized in the construction of adjacent shoulders and slopes or otherwise disposed of as directed, and any additional material required for the completion of the shoulders and slopes shall be secured from sources indicated on Plans and/or Exhibits or designed by the Engineer.

B. Application: The material shall be delivered in approved vehicles of a uniform capacity, and it shall be the charge of the Contractor that the required amount of specified material shall be delivered in each 100-foot station. Material deposited upon the subgrade shall be spread and shaped the same day unless otherwise directed by the Engineer in writing. In the event inclement weather or other unforeseen circumstances render impractical the spreading of the material during the first 24-hour period, the material shall be scarified and spread as directed by the Engineer. The material shall be sprinkled, if directed, and shall then be bladed, dragged, and shaped to conform to typical sections as shown on Plans and/or Exhibits. All areas and “nests” of segregated coarse or fine material shall be corrected or removed and replaced with well graded material, as directed by the Engineer. If additional binder is considered desirable or necessary after the material is spread and shaped, it shall be furnished and applied in the amount directed by the Engineer. Such binder material shall be carefully and evenly incorporated with the material in place by scarifying, harrowing, brooming, or by other approved methods.

The course shall be compacted by the method of compaction hereinafter specified as the "Ordinary Compaction" method or the "Density Control" method of compaction as indicated on the Plans and/or Exhibits.

When the Plans and/or Exhibits indicate that the "Ordinary Compaction" method is to be used, the following provisions shall apply:

The course shall be sprinkled as required and rolled as directed until a uniform compaction is secured. Throughout this entire operation, the shape of the course shall be maintained by blading and the surface upon completion shall be smooth and in conformity with the typical sections shown on Plans and/or Exhibits and to the established lines and grades. In that area on which pavement to be placed, any deviation in excess of ¼-inch in cross section and in a length of 16-feet measured longitudinally shall be corrected by loosening, adding or removing material, reshaping and recompacting by sprinkling and rolling. All irregularities, depressions or weak spots which develop shall be corrected immediately by scarifying the areas affected, adding suitable material as required, reshaping and recompacting by sprinkling and rolling.

When the Plans and/or Exhibits indicate that the "Density Control" method of compaction to be used, the following provisions shall apply:

The course shall be sprinkled as required and compacted to the extent necessary to provide not less than the percent density as hereinafter specified under "Density." In addition to the requirements specified for density, the full depth of flexible base shown on Plans and/or Exhibits shall be compacted to the extent necessary to remain firm and stable under construction equipment. After each section of flexible base is completed, tests as necessary will be made by the Engineer. If the material fails to meet the density requirements, it shall be reworked as necessary to meet these requirements. Throughout this entire operation the shape of the course shall be maintained by blading, and the surface upon completion shall be smooth and in conformity with the typical sections shown on the Plans and/or Exhibits and to the established lines and grades. In that area on which pavement is to be placed, any deviation in excess of ¼-inch in cross section and in length of 16-feet measured longitudinally shall be corrected by loosening, adding, or removing material, reshaping and recompacting by sprinkling and rolling. All irregularities, depressions or weak spots which develop shall be corrected immediately by scarifying the areas affected, adding suitable material as required, reshaping and recompacting by sprinkling and rolling. Should the base course, due to any reason or cause, lose the required stability, density or finish before the surfacing is complete, it shall be recompacted and refinished at the sole expense of the Contractor.

**Std. 8/12/85**
**Revised 03/29/12**

# ITEM 2242

# CEMENT STABILIZED SUB-GRADE

## I. GENERAL

This Item consists of spreading Portland cement upon subgrade, mixing, and compacting to required density, lines, grades, and cross-sections when required by soil conditions and approved by Engineer.

## II. MATERIALS

A. Cement: Portland cement to be Type I, standard brand conforming to the requirements of ASTM C150-77. One sack (cubic foot) to weigh 94 pounds; one barrel to weigh 376 pounds. Mixture is 2.0 sacks of cement per ton of sand.

B. Aggregate: Use sand containing deleterious materials not to exceed the following requirements by weight.

| | |
|---|---|
| Material Removed by Decantation | 5.0% |
| Clay Lumps | 0.5% |
| Other Deleterious Substances such as Coal, Shale, or Coated Grains of Soft Flaky Particles | 2.0% |
| Gradation Requirements | |
| Retained on d -Inch Sieve | 0% |
| Retained on ¼-Inch Sieve | 0% - 5% |
| Retained on 20 Mesh Sieve | 15% - 50% |
| Retained on 100 Mesh Sieve | 80% -100% |

Color Test ASTM C40-73 - color of darker than standard color.

C. Water: Fresh and clean.

III. EXECUTION

A. Proportioning: Ratio of cement to soil will be based on dry material weight and will be established by Engineer in field to provide desired stability. Normal operational range is 6 percent to 10 percent by weight. Percentage of moisture in soil, at time of cement application, not to exceed the quantity that will permit uniform and intimate mixture of soil and cement during dry mixing operations, and not to exceed the specified optimum moisture content for the soil-cement mixture, as determined from ASTM D588.

B. Spreading and Mixing: Spread cement with approved equipment. Do not spread with maintainer or motor grader, or during windy weather. Immediately after spreading, thoroughly mix soil and cement to depth specified, using approved pulver-type road mixer. Distribute cement only on area that can be completed, ready for curing before initial setting of the mixture. Do not mix or place cement when the air temperature is below 40 degrees F and is falling, the temperature being taken in the shade and away from artificial heat, or when weather conditions, in the opinion of the Engineer, are not suitable.

C. Compaction: The material shall be compacted to not less than the density shown on the Plans and/or Exhibits. At the start of compaction, the percentage of moisture in the mixture and in unpulverized soil lumps, based on oven-dry weights, shall not be below or more than two percentage points above the specified optimum moisture content, and shall be less than that quantity which will cause the Portland cement treatment mixture to become unstable during compaction and finishing. When the uncompacted mixture is wetted by rain so that the average moisture content exceeds the tolerance given at the time of final compaction, the entire section shall be reconstructed in accordance with this specification at the sole expense of the Contractor.

Prior to the beginning of compaction, the mixture shall be in loose condition for its full depth. The loose mixture then shall be uniformly compacted to the specified density within 2 hours.

After the base or subbase material and cement mixture, excepting the top mulch, is compacted, water shall be uniformly applied as needed and thoroughly mixed in with as a spiketooth harrow or equal. The surface shall then be scarified to loosen any imprint left by compacting or shaping equipment.

The resulting surface shall be thoroughly rolled with a pneumatic tire roller and “clipped,” “skinned,” or “tight bladed” by a power grader to a depth of approximately ¼-inch, removing all loosened soil and cement from the section.

The surface shall then be thoroughly compacted with pneumatic tire roller, adding small increments of moisture as needed during rolling. If plus No. 4 aggregate is

present in the mixture, one complete coverage of the section with the flat wheel roller shall be made immediately after the "clipping" operation. When directed by the Engineer, surface finishing methods may be varied from this procedure provided a dense, uniform surface, free of surface compaction planes, is produced. The moisture content of the surface material must be maintained at its specified optimum during all finishing operations. Surface compaction and finishing shall proceed in such a manner as to produce, in not more than 2 hours, a smooth, closely knit surface, free of cracks, ridges or loose material conforming to the crown, grade, and line shown on the Plans and/or Exhibits.

D. Curing

1. Protection and Cover: After the Portland cement treatment for base or subbase course has been finished as specified herein, the surface shall be protected against rapid drying by either of the following curing methods for a period as shown on Plans and/or Exhibits but in no case less than 3 days or until the surface or an additional base course is placed:

   a. Maintain in a thorough and continuously moist condition by sprinkling.

   b. Apply a 2-inch layer of earth on the completed course and maintain in a moist condition.

   c. Apply an asphalt membrane to the course, immediately after same is completed. Unless otherwise shown on the Plans and/or Exhibits, the asphalt shall be RC-250, in accordance with the Item, "Asphalt, Oils, and Emulsions." The asphalt shall completely cover and seal the total surface of the base and fill all voids. If the Contractor elects to use this method, it shall be his responsibility to protect the asphalt membrane from being picked up by traffic by either sanding or dusting the surface of same. The asphalt membrane may remain in place when the proposed surface or other base courses are placed.

2. Surface: The surface or other base courses may be applied on the finished section as soon after completion as operations will permit.

E. Construction Joints: At the end of each day's construction a straight transverse construction joint shall be formed by cutting back into the total width of completed work to form a true vertical face free of loose and shattered material.

Portland cement treatment for base or subbase for large, wide areas shall be built in a series of parallel lanes of convenient length and width meeting the approval of the Engineer.

F. Traffic: Completed sections of Portland cement treatment may be opened immediately to local traffic and to construction equipment, and to all traffic after the curing period, provided the mixture has hardened sufficiently to prevent marring or distorting the surface by equipment or traffic.

G. Maintenance: The Contractor shall be required, within the limits of his contract, to maintain the Portland cement treatment in good condition until all work has been completed and accepted. Maintenance shall include immediate repairs of any defects that may occur. This work shall be done by the Contractor at his own expense and repeated as often as may be necessary to keep the area continuously intact. Faulty work shall be replaced for the full depth of treatment. It is the intent of this specification that the Contractor construct the plan depth of cement treated base in one homogeneous mass. The addition of thin stabilized layers to provide the minimum specified depth will not be permitted.

H. Penalty for Deficient Subgrade Thickness: It is the intent of this specification that the cement stabilized base be constructed in strict conformity with the thickness and typical sections shown on Plans and/or Exhibits. Where any such subgrade is found not so constructed, the following rules relative to adjustment of payment for acceptable stabilized subgrade and to replacement of faulty stabilized subgrade shall govern.

1. Subgrade Thickness: The cement stabilized Subgrade will be core drilled by a Testing Lab prior to application of base material or concrete surface.

   The thickness of the subgrade will be determined by measurement of the cores. At such points as the Engineer may select in each unit, one core will be taken for each 1000 square yards of cement stabilized subgrade or fraction thereof, in the unit. If the core so taken is not deficient more than 0.5-inch from the plan thickness, full payment will be made. If the core is deficient in thickness by more than 0.5-inch but not more than 1.50-inches from the plan thickness, two additional cores will be taken from the area represented and the average of the three cores determined. If the average measurement of these three cores is not deficient more than 0.5-inch from the plan thickness, full payment will be made. If the average thickness of the three cores is deficient more than 0.5-inch, the sections having such deficiencies shall be removed and the subgrade shall be replaced to the specified plan depth.

2. No additional payment over Contract unit price to be made for pavement of thickness exceeding that required by Plans and/or Exhibits.

3. Additional cores required to determine areas of deficient thickness to be paid for by Contractor.

**Std. 3/21/89**
**Revised 10/1/02**

# ITEM 2245

# LIME-STABILIZED SUBGRADE

## I. GENERAL

Consists of treating subgrade by pulverizing, adding lime, mixing, and compacting to required lines, grades, and cross-sections. Applies to natural ground, cuts, embankments, or existing pavement sections.

## II. MATERIALS

A. Type A - Hydrated Lime: To conform to requirements of the Texas Department of Transportation Standard Specifications for Construction of Highways, Streets and Bridges, 1993 Edition, Item 264.

B. Type B - Commercial Lime Slurry: To conform to requirements of Texas Department of Transportation Standard Specifications for Construction of Highways, Streets and Bridges, 1993 Edition, Item 264.

## III. EXECUTION

A. Preparation: Properly prepare subgrade prior to beginning lime treatment. Scarify or excavate to depth shown. Provide machine that will cut and scarify to indicated depth. Unstable material below indicated depth to be corrected by proper compaction. Distribute lime uniformly over subgrade at required rate. Do not place lime that cannot completely receive first mixing during same working day.

B. Placing: Place lime by either one of the following methods:

1. Dry Placing: Place lime using approved spreader or by bag distribution. Do not spread with maintainer or motor grader. Do not place lime during windy or other adverse weather conditions. Sprinkle until proper moisture content has been secured.

2. Slurry Placing: Mix Lime with water in trucks and place, using approved distributor. Make successive passes over measured section of roadway until proper lime and moisture content has been secured. Furnish truck with approved agitator which will keep lime and water uniformly mixed. Do not change grade of slurry without prior approval.

C. Mixing: Mixing procedure to be the same for either "dry placing" or "slurry placing." Obtain uniform mixture and moisture content.

1. First Mixing: Thoroughly mix soil and lime to required depth, using approved pulver-type road mixer. Mix until homogeneous, friable mixture of lime and soil is obtained, free of clods or lumps. Add proper moisture and cure from 1 to 2 days as required. Keep moist during curing period.

2. Final Mixing: Uniform mix, after proper curing, using approved pulver-type road mixer. All clods or lumps to be reduced in size by pulverization methods. When all nonslaking aggregates (sound or firm particles) retained on No. 4 sieve are removed, remainder of material to meet following requirements when tested dry by laboratory sieves:

| | **Percent** |
|---|---|
| Minimum Passing 1¾-Inch Sieve | 100 |
| Minimum Passing No. 4 Sieve | 60 |

Hydrated lime exposed to open air for period of 6 hours or more, or to excessive loss due to washing or blowing between time of application and mixing, will not be accepted for payment.

D. Compaction: Begin compaction immediately after final mixing. Provide optimum moisture during compaction. Begin at bottom and compact, using approved tamping rollers, until entire required depth is uniformly compacted. Compact treated material in such matter that it will not be mixed with underlying subgrade material. All irregularities or weak spots to be corrected immediately by replacing material and recompacting. Maintain surface in smooth condition until base course is placed. Acquire density of at least 95 percent of maximum dry density at optimum moisture content of treated material as determined by AASHTO Standard Method T-99-74 Density. Use approved pneumatic-type roller for final surface rolling. Moist-cure completed subgrade section for minimum of 4 days before placing pavement.

## IV. QUALITY ASSURANCE

A. Store lime in weatherproof containers, bins or buildings. Protect lime from any dampness or moisture.

B. Weigh lime furnished in trucks on approved scales.

C. Lime furnished in bags to bear manufacturer's certified weight.

**Std. 9/26/2016**

# ITEM 2401

# DEWATERING AND DRAINAGE OF EXCAVATION

## I. GENERAL

### A. Scope

This section provides for furnishing all labor, materials, equipment, power, incidentals and for performing all operations necessary to dewater, drain, and maintain excavations and foundation beds as necessary for construction of structures and appurtenances. Maintain surface drainage, eliminate seepage from excavation or other work and protect work against rising waters and floods and repair of any resulting damage.

### B. Contractor's Responsibility

Contractor shall have sole responsibility for dewatering systems and for all loss or damage resulting from partial or complete failure of protective measures, except as otherwise provided in the general and supplementary conditions of this manual.

### C. Submittals

1. If requested, submit shop drawings and manufacturers data for proposed equipment and procedure. Do not start dewatering or other foundation drainage until the requested data has been submitted and reviewed.

2. Equipment Supplier: With submittals, provide the name of the supplier of well point or other foundation drainage equipment.

### D. Related Work (if utilized in this project)

1. Division 2, Site Work

   a. Item 1541 - Trench Safety Systems

   b. Item 2220 - Structural Excavation and Backfill

## II. MATERIALS

The necessary equipment and material for the dewatering and drainage systems shall be selected by contractor and submitted to the engineer for review.

## III. EXECUTION

### A. Dewatering Excavations

1. Furnish, install, operate, and maintain all necessary pumping for dewatering the various parts of the work and for maintaining free of water the foundations and such other parts of the work as required for construction operations and as required for inspections and safety.

2. Continue dewatering in all required areas until the concrete structure, the trench, the embankment, and scour protection have been completed for the excavation or to another designated level.

3. Provide a uniform diameter for each pipe drain run constructed for dewatering. Remove the pipe drain when it has served its purpose. If removal of the pipe is impractical, provide grout connections at 50-foot intervals and fill the pipe with clay grout or cement and sand grout when the pipe has served its purpose.

4. After completion of construction at the site, remove the drainage equipment and dispose of any material not needed.

### B. Requirements for Well Points

1. Well points, where used, must be furnished, installed, and operated by a reputable contractor regularly engaged in this business and approved.

2. Submit the design of the well point system for review. Pre-drain by well point vacuum method.

3. Install sufficient piezometers to show that all trench excavation in sandy material is pre-drained prior to excavation.

4. Well points may be omitted for portions of underdrains or other trenches, only where auger borings and piezometers show that the soil is pre-drained by an exterior system.

C. Duration of Drainage

1. In areas where concrete is to be placed, carry out the foundation drainage, so that the required lowering of the water table will be effected prior to placing reinforcing steel. Keep foundation beds free from water to be same levels for 3 days after pouring concrete.

2. Operate pumps to keep each underdrain system drained to the approximate level of the top of the lowest pipe of the system until the removal or flooding of cofferdams.

D. Protection of Structures

Provide adequate protection for all structures to avoid damage to concrete.

E. Repair of Damage

Contractor shall have full responsibility for all loss and damage due to flood, rising water, or seepage in any part of the work. Repair any damage to partially completed work from these or other causes.

**Std. 7/28/2022**
**Revised 7/28/2022**

# ITEM 2500

# STORM SEWERS

## I. GENERAL

### A. Scope

The work to be performed under the specifications shall consist of the furnishing and installation of pipe sewer mains, laterals, stubs, and leads for storm sewer inlets. The type or types of pipe to be furnished and installed under the contract will conform to the type or types designated on the Plans and/or Exhibits and as set out on the bid proposal sheet.

### B. Related Work (if utilized in this project)

Site Work

1. Item 2102 - Clearing and Grubbing
2. Item 2221 - Excavation, Trenching and Backfilling for Utilities
3. Item 2224 - Encasing, Augering and Tunneling Pipe
4. Item 2227 - Waste Material Disposal

### C. Measurement and Payment

See Item 1400 - Measurement and Payment

## II. MATERIALS

A. Reinforced Concrete Pipe: Provide reinforced concrete pipe which conforms with ASTM C-76, of size and class shown or, with the following additional requirements. For circular pipe with elliptical reinforcing, apply a readily visible stripe at least 12-inches long painted or otherwise applied on the inside and outside of the pipe at each end so that when the pipe is laid in the proper position the line will be at the center of the top of the pipe.

B. Non-Reinforced Concrete Pipe: Provide non-reinforced concrete pipe which conforms to ASTM C-14 of size and class specified.

C. Corrugated Metal Pipe: Provide corrugated metal pipe fabricated from corrugated sheet metals which shall comply with the requirements of AASHTO Designation: M36. The minimum gauge number of the galvanized sheet shall be as designated on the Plans and/or Exhibits.

Where specified, the pipe shall be coated inside and out with a bituminous coating which shall be 99.5 percent form thickness of 0.05-inch, measured on the crest of the corrugations; shall adhere to the metal tenaciously; shall not chip off in handling; and shall protect the pipe from deterioration as evidenced by samples prepared therefrom successfully meeting the Shock Test and Flow Test.

D. Pipe Joints: Unless otherwise specified, joints in non-reinforced concrete pipe, reinforced concrete pipe, and clay sewer pipe shall be cold compound joints or neoprene joints as hereinafter described. Cold Compound joints shall be used on non-reinforced concrete pipe only.

1. Bell and Spigot Pipe-Cold Compound Joints: The inside of the pipe bells and the outside of the spigot ends shall, while dry, be completely coated with joint primer. The coating shall be applied sufficiently in advance so that the primer will be thoroughly dry when the pipe is laid. Pipe 24-inches and larger shall be primed at the point of manufacture. Apply a fillet of Compound on the bottom half of the inside of the bell, press enough dry twisted jute into the compound to pass the pipe and lap at the top and shove home the spigot of the pipe. Bring the jute around the pipe and firmly caulk into place. The jute should be sufficient to fill one fourth the depth of the bell. Fill the remaining three-fourths of the depth of the bell with compound taking care to leave no voids and provide sufficient compound to form a fillet sloping 45° from the outer end of the bell to the barrel of the next pipe.

   Compound used for these joints shall be a well-known brand of material of proven worth, uniform in consistency and approved by the Engineer as being equal to Talcote No. 0.52 or Gulf States No. GS 702 or 722. Primer shall be of the type recommended by the manufacturer of the compound used.

2. Tongue and Groove Pipe-Cold Compound Joints: Unless otherwise specified, this type of joint shall be used for tongue and groove pipe joints not made with approved neoprene or rubber gaskets. The compound and primer shall be the same as described herein for use with bell and spigot pipe.

Both ends of the pipe shall, while clean and dry, be coated with primer on all surfaces that will be in contact with the compound. The primer shall be allowed to dry before the pipe is laid. 24-Inch and larger pipe shall be primed at the factory. After pipe has been set to proper line and grade in the trench a ½- inch thick layer of the compound shall be troweled or otherwise placed on the groove end of the pipe covering the joint face around the entire circumference. Next the tongue end of the next pipe shall be shoved "home" with sufficient pressure to make a tight joint. Care shall be taken to avoid leaving ridges of the compound protecting into the pipe in a manner that would obstruct the flow. The Engineer will make the necessary adjustment in the quality and consistency of the compound as the work progresses.

An outside band of the joint compound shall be installed completely around the circumference of the pipe at the joint. This will necessitate digging "bell holes" at each joint. The band shall have a thickness at the center of at least ¾-inch tapering uniformly to nothing approximately 3-inches each side of the center.

Where Class A bedding is used, the band may be omitted on portions of the joint that will be embedded in the cement stabilized sand bedding.

3. Neoprene or Rubber Gasket Joints: Joints made with neoprene, rubber, or other similar materials that has been approved by the Engineer will be acceptable for use with reinforced or non- reinforced concrete pipe, either tongue and groove or bell and spigot. The ends of the pipe must be accurately made and designed for use with the gaskets. The type of joint and the gasket must have the approval of the Engineer and may be submitted to the Owner for approval prior to submitting bids for work on which its use is intended. The joint materials and workmanship shall be such as to provide a water-tight joint. Joints shall, unless otherwise specified, be pointed on the outside with cement mortar.

## III. EXECUTION

### A. Pipe Handling

1. Pipe shipped to the job shall be properly protected against normal forces during transit from manufacturing site to project site.

2. Contractor shall provide and employ slings, lifting cables, strong backs, etc. as recommended by manufacturer in handling pipe, fittings, and

appurtenances on the job. Proper care against damage from rough handling shall be exercised at all times. Under no circumstances will pipe be dropped, nor will pipe be allowed to slam together.

3. Pipe is to be strung only on street right-of-way and easements; pipe is never to be strung in drainage ditches. Strung pipe shall not be placed so as to prevent or unreasonably obstruct access of people or vehicles to residences or to businesses. Loose items are not to be left in street right-of-way. Delivery of piping materials is to be scheduled so that pipe is strung a maximum of two (2) weeks prior to pipe laying.

4. Pipe will be strung so bells or tongue face in the direction of laying advancement.

B. Pipe Laying General

1. Use specified piping materials corresponding to the material, size, type, etc. indicated on Plans and/or Exhibits.

2. Do not lay pipe in water, or when trench or weather are unsuitable for work, except with permission of the Engineer. Keep water out of trench until jointing is complete. When work is not in progress, close ends of pipe and fittings securely so that no trench water, earth, or other substances will enter pipes or storm sewer structures.

3. Keep the inside of the pipe free from foreign matter during operations by plugging or other approved method.

4. Place pipe so that the full length of each section rests solidly upon the pipe bed, with recesses excavated to accommodate joints. Take up and relay pipe when the grade or joint is disturbed after laying.

5. Where pipe ends are left for future connections, install brick and mortar, plugs or caps, as shown.

6. Handle pipe and accessories so that all pipe placed in the trench is sound and undamaged.

7. Before installation, inspect pipe for defects. Replace sections of pipe found to be defective, damaged, or unsound.

8. Pipe barrels to be clean at time of joining. Swab as required to remove dirt, mud, and other foreign matter.

C. Bedding and Pipe Placement

Refer to Item 2221 - Excavation, Trenching and Backfilling for Utilities and details on drawing.

D. Joints

1. Make of joints generally to be in accordance with manufacturers directions and reference standards.

2. For pipe using a compressed elastomeric gasket joints, bell and spigot surfaces and gasket shall be clean. Area adjacent to gasket and gasket groove to be free of foreign particles. Spigot beveled as required. Gasket or spigot end lubricated per manufacturer's directions. The two pieces to be joined are to be in axial alignment and restrained from rotation around the axis, until the pipe is "home." The position of the gasket is to be checked all around with a feeler gauge when so recommended, or other recommended checks made to insure proper gasket positioning, and/or pipe end gap. Pipe ends are not to be butted. The force necessary to push the pipe "home" shall be closely controlled, applied in such a manner as not to displace nor damage piping being joined.

**Std. 7/29/85**
**Revised 3/11/15**

# ITEM 2513

# HOT-MIX ASPHALTIC CONCRETE PAVEMENT

## I. GENERAL

This Item governs for hot-mix asphaltic concrete surfacing consisting of a base course, a leveling-up course, a surface course, or any combination of these courses; each course composed of a compacted mixture of mineral aggregate and asphaltic material and constructed on an approved subgrade, a subbase course, a base course, or in case of a bridge, on prepared floor slab. Construct in accordance with these specifications and in conformity with lines, grades, compacted thickness, and typical cross-sections shown on Plans and/or Exhibits or described in preceding special provision.

## II. MATERIALS

A. Mineral Aggregate: Composed of a course aggregate, a fine aggregate, and a mineral filler, and if approved by an Engineer a suitable mineral admixture which may or may not increase or decrease the quantity of asphaltic cement in mixture. Exact proportion of admixture, if approved to be determined by Engineer. Submit samples of coarse aggregate, fine aggregate, and mineral filler and test in accordance with prescribed methods. Approval of both materials and source of supply must be obtained prior to delivery of any material.

B. Coarse Aggregate: Consists of shell (max. 40% by weight), slag, or limestone, or a mixture therefore as hereinafter specified, of uniform quality throughout and free from dirt, organic, or other injurious matter occurring either freely in material or as a coating on aggregate. Abrasion of slag or limestone from which coarse aggregate is made of not more than 35 when subjected to Los Angeles Abrasion Test (AASHTO-96). Los Angeles Abrasion Test for shell, not more than 50 (AASHTO, T-96).

C. Fine Aggregate: Consists of sand or a combination of sand and stone, shell screenings, or slag screenings. Sand composed of sound, durable stone particles, free from loam or other injurious foreign matter. Screenings of same or similar materials as specified for coarse aggregate. Sand or combination of sand and screenings to meet the following requirements when tested by standard laboratory methods:

| **Percent by Weight** | |
|---|---|
| Passing No. Sieve | 100 |
| Passing No. 200 Sieve | 10-30 |

The plasticity index of that part of the fine aggregate passing the No. 40 sieve to be not more than 6.

D. Mineral Filler: Consists of thoroughly dry stone dust, slate dust, oyster shell dust, Portland cement, or other mineral dust approved in writing. Free from foreign, deleterious, and other injurious matter. Meet following grading requirements when tested by standard laboratory methods.

| **Percent by Weight** | |
|---|---|
| Passing a No. 30 Sieve | 95-100% |
| Passing a No. 80 Sieve | 75% |
| Passing a No. 200 Sieve | 55% |

E. Asphalt: Grade of asphalt as designated by Engineer. If more than one type of asphaltic concrete mixture is specified for project, only one grade of asphalt will be required for all types of mixtures. Unless otherwise noted in the plans/exhibits asphaltic placement and or repair will consist of 8-inch thick asphalt base, Grade 2, PG-64 per TXDOT Standard Specification 292. Surface course asphaltic placement and or repair will consist of 2-inch thick surface course Type "D" per TXDOT Standard Specification 340.

Asphaltic materials, including tack coat, to meet requirements of the Item, "Asphalt, Oils, and Emulsions," of the Texas Highway Department Standard Specifications for Construction of Highways, Streets and Bridges, 2004 Edition or most current.

F. Paving Mixture: To consist of a uniform mixture of coarse aggregate, fine aggregate, asphaltic material and mineral filler if required.

Grading of each constituent such as to produce, when properly proportioned, a mixture conforming to limitations for grading for type specified. Exact proportions of each constituent producing total aggregate within these limits to be directed, and to conform to the requirements of Article 340.3, "Paving Mixtures," of the Texas Highway Department Standard Specifications for Construction of Highways, Streets and Bridges, 2004 Edition or most current.

G. Variation of percentage of bitumen in any mixture not more than one-half of one percent from proportion established by Engineer.

When required samples of hot mixture may be taken from trucks or from finished pavement. Determine minimum weight of test specimen in grams by multiplying

3,000 by maximum size aggregate in inches. Variation of specimen from grading proportions specified for mix, when tested by standard methods (in which benzol may be used as solvent), of not more than 5 percent.

III. EXECUTION

A. Proportions of various materials entering into asphaltic mixture as directed and in accordance with these specifications. Engineer or his authorized representative to have access at any time to all parts of paving plant. Use satisfactory equipment and construction methods as hereinafter specified.

B. Store or stockpile separately various sizes of mineral aggregate as received. Feed various sizes of mineral aggregate to dryer by means of mechanical device that will give a uniform and constant feed of each size incorporated to control temperature and grading of mineral aggregate.

C. Dry mineral aggregate in such manner that finer particles will not escape with furnace gases. Heat aggregate in a suitable apparatus which provides continuous agitation during heating. Provide efficient and positive control of temperature so that aggregate is not damaged and mixture produced has a temperature between 250 degrees F and 375 degrees F. Provide recording thermometer which will record temperature of aggregate as it leaves dryer. Equip recording thermometer with a double-pen in order to record both temperature of rock and temperature of asphalt incorporated in batch. Record temperatures on 24-hour charts. Furnish dryer or dryers of sufficient size to dry and heat amount of aggregate required to keep plant in continuous operation.

D. Bin sizes and screening capacity sufficient to screen and store amount of aggregate required to properly operate plant and keep plant in continuous operation at full capacity. Bins to continuous operation at full capacity. Bins to contain sizes of aggregate as specified in Article 340.4. "Equipment." Sub-article, "Screening and Proportioning," of the Texas Highway Department Standard Specifications for construction of Highways, Streets and Bridges, 2004 Edition or most current.

Provide bins with tight cut-off gates so that there is no leakage of mineral aggregate or mineral filler into weigh box. Weigh box for mineral aggregate of sufficient capacity to hold a complete batch of aggregate and mineral filler without wasting or leveling by hand, and so designed with opening in top that, if in charging, an excess of one size of mineral aggregate is introduced into box, it may be removed by operator. Provide weigh box with a close fitting and quick operating cut-off gate so that there is no leakage of mineral aggregate into mixer.

E. Scales: Scales for weighing mineral aggregate and asphaltic material shall equal the weighing equipment used at stationary commercial asphaltic concrete plants as approved by the Engineer.

Scales of multi-beam type to have sufficient weighing beams to weigh each grade of aggregate separately and also filter dust separately. Furnish scales with tare beam for balancing. Equip beam scales with a tell-tale dial indicator of springless dial type indicating over and under load of at least 50 pounds. Scales that are not accurate within 4 pounds per 1,000 pounds net load will be considered unsatisfactory. In case vibration of plant interferes with accurate weighing, insulate scales satisfactorily against shock or vibration.

F. Provide ample asphalt cement storage to meet requirements of Plans and/or Exhibits. Heat asphalt cement in storage by steam coils, absolutely tight to prevent leakage of moisture into asphalt. Temperature of steam for heating not in excess of 400 degrees F. No direct fire heating of asphalt permitted. Agitation of asphalt with steam or air not permitted.

Provide steam heating system of type and capacity as to insure maintaining asphalt cement at a uniform draw-off temperature at asphalt cement bucket of between 275 degrees F to 375 degrees F. Maintain temperature with an efficient and positive control of heat at all times. Any asphalt cement heated above 375 degrees F, either before or during mixing with mineral aggregate, will be rejected.

Use quick cut-off type draw-off valve at asphalt cement bucket that will not leak any asphalt into bucket after required weight of asphalt cement has been drawn. Asphalt supply line of circulating type, and equipped with recording thermometer indicating temperature of asphalt a draw-off valve. Recording thermometer may be combined with recording thermometer used in recording temperature of aggregate by using a double-pen recorder.

Asphalt cement weigh bucket of type from which asphalt will flow into mixer for approximately full width of mixer so as not to deposit asphalt cement in one place in mixer. Scales for weighing asphaltic cement of springless dial type arranged for quick adjustment at zero to provide for change in tare. Provide pointer to indicate weight of asphalt cement required in one batch.

G. Mixer of twin-pug-mill type and capacity of not less than 3,000 pounds in single batch. Number and position of blades such as to give a uniform and complete circulation of batch in mixer from center to four ends of mixer arms and back to center. Mixers which tend to segregate mineral aggregate or fail to secure thorough and uniform mixing with asphalt cement and filler dust will not be used. Determination of thorough and uniform mixing will be made by mixing standard batch for required time and then dumping batch and taking samples form different parts of batch is uniform throughout, or otherwise mixer will be rejected.

Provide mixers with an automatic time lock on discharge gates of mixer and weight box and lock for a period of 45 seconds after all of mineral aggregate has been introduced into mixer. When discharged, mixture to have a temperature of 300 degrees F to 375 degrees F. Dump door or doors of mixer to be tight to dry mineral aggregate or dust so that there is no spilling from pug mill. In introducing batch into mixer, introduce mineral aggregate first, then thoroughly mix for a period of five to ten seconds before asphaltic cement is added. Continue mixing for required time, or longer if necessary to produce a mixture of uniform consistency.

H. Tack Coat: Thoroughly clean surface of base or surface of concrete bridge, as applicable, by brooming with wire brushes before asphaltic surface mixture is laid, when tack coat is shown, or if directed, give base an application of cut back asphalt applied as directed with an approved sprayer and at rate of application of 0.05 to 0.15 gallons per square yard. Cut-back asphalt as specified under Article II, Paragraph E, or made by combining 50 percent material (as specified) and 50 percent gasoline.

I. Laying Materials

1. Construct pavement on previously completed and approved subgrade, base, existing pavement, bituminous surface or in case of a bridge, on prepared floor slab.

2. Place no asphaltic mixture or tack coat when air temperature is below 45 degrees F and is falling. Asphaltic mixture or tack coat may be placed after air temperature is above 40 degrees F and is rising, provided temperature is taken in shade away from artificial heat. Place no asphaltic mixture or tack coat when weather conditions, in opinion of Engineer, are unsuitable.

3. Haul asphaltic concrete mixture, heated and prepared as specified, to site of work in tight vehicles previously cleaned of all foreign materials and, if considered necessary, covered with canvas of sufficient size to protect entire load. Arrange dispatching of vehicle so that all material delivered may be placed and receive its initial rolling in daylight. Lay mixture only on approved base course, which has been tack coated as previously specified and free from all foreign materials. Paint contact surfaces of curbs and structures and all joints with thin uniform coating of cut-back or emulsified asphalt as required for tack coating. Lay mixture at temperature of 250 degrees F to 375 degrees F and spread and compact, using an approved finishing machine. Use finishing machine capable of producing finished surface that conforms to required typical sections and

surfaces tests. Areas nor accessible for finishing machine may be hand spread and shaped when approved.

4. Use approved finishing machine of screeding and troweling type. Forms adequate to control lateral thrust due to rolling. If a finishing machine designed to run on forms is used, operate it on header curb, steel forms, or rigid steel faced forms approved by Engineer. Set forms to line and grade.

5. Oil or saturated solution of hydrated lime may be used for lubricating shovels and trucks to facilitate handling of asphaltic materials. Use of an excessive amount of either material not permitted.

6. Adjacent to flush curbs, gutters, liners, and structures, finish mix uniformly high so that when compacted it will be slightly above edge of curb or flush structure.

7. When Plans and/or Exhibits require application of a non-skid surface of asphaltic concrete pavement, spread Type "B", "Type "C", "Type "D" or Type "E" mix, as specified, so that after lightly rolling, it has a finished thickness of approximately 3/8-inch less than completed thickness of pavement shown. After this course has been laid, spread mixture specified as Type "F" with sufficient thickness so that, after receiving ultimate compression, compacted pavement complies with requirements of typical cross-sections shown, but in no case will weight of Type "F" mixture be less than 35 pounds nor more than 50 pounds per square yard of surfacing.

8. While still hot, and as soon as it will bear roller without undue displacement or hair cracking, compress surface thoroughly and uniformly with an acceptable power-driven 3-wheel roller weighing not less than 10 tons. Weight on two rear wheels of roller obtained by power-driven tandem roller weighing not less than eight tons.

   Rolling shall start longitudinally at the sides and proceed toward the center of the pavement, over- lapping on successive trips by at least one-half of the width of the rear wheels. Alternate trips of the roller shall be slightly different in length. If necessary, the pavement shall then be subject to diagonal rolling in each direction with a tandem roller, the second diagonal crossing the lines of the first.

   Rolling shall be continued until no further compression can be obtained and all roller marks are eliminated, and at a rate of not more than 20-tons of mixture per hour for each roller used.

   The motion of the roller shall at all times be slow enough to avoid displacement of the hot mixture. Any displacement occurring as a result

of reversing the direction of the roller, or by any other cause, shall at once be corrected by the use of rakes and of fresh mixture where required. The roller must not stand on the completed pavement which has not cooled to normal atmospheric temperature. To prevent adhesion of the surfacing mixture to the roller, the wheels shall be kept properly moistened with water but an excess of water will not be permitted.

The roller's drive wheel shall be ahead of the tiller wheel at all times during compaction. If a vibratory roller is used for compaction, a very low amplitude is to be used and the roller should be vibrating only when it is moving.

9. Time Limit vs Temperature

**Cessation Requirements**
**Recommended Minimum Laydown Temperature**

| **Base Temp Degrees F** | **½″** | **¾″** | **1″** | **1½″** | **2″** | **3″ & Greater** |
|---|---|---|---|---|---|---|
| 20-32 | --- | --- | --- | --- | --- | 285* |
| +32-40 | --- | --- | --- | 305 | 295 | 280 |
| +40-50 | --- | --- | 310 | 300 | 285 | 275 |
| +50-60 | --- | 310 | 300 | 295 | 280 | 270 |
| +60-70 | 310 | 300 | 290 | 285 | 275 | 265 |
| +70-80 | 300 | 290 | 285 | 280 | 270 | 265 |
| +80-90 | 290 | 280 | 275 | 270 | 265 | 260 |
| +90 | 280 | 275 | 270 | 265 | 260 | 255 |
| Rolling time, Minutes | 4 | 6 | 8 | 12 | 15 | 15 |

* Increase by 15 degrees when placement is on base or subbase containing moisture.

Base temperature is the temperature of the layer (Previous mat or base) on which the mat is placed.

The above chart gives a time limit in which the mat needs to be completely rolled for density before the mat cools to 175 degrees F. This temperature was selected as about the temperature below which rolling produces little compaction. The recommendations are, in effect, the "worst" conditions. These are only minimum requirements.

10. Along curbs, headers, and similar structures, and at places not accessible to roller, or in such positions as will not allow thorough compaction with roller, compact mixture thoroughly with lightly oiled tamps.

11. Surface of pavement after compression to be smooth and true and conform to line, grade and typical cross-sections shown. No deviation in excess of 1/8-inch per foot from nearest point of contact when surface is tested with a standard 10-foot straight-edge laid parallel to center line of roadway. Maximum ordinate measured from face of straight-edge not in excess of ¼-inch at any point. Immediately correct any areas of surface not meeting these requirements. Roll mixtures until course is unyielding and true to established grade and cross-section.

12. Place surface course as nearly continuous as possible. Allow roller to pass over unprotected end of freshly laid mixture only when laying of course is discontinued for such length of time as to permit mixture to become chilled. In such cases, when work is resumed, material laid must be either cut back so as to produce a slightly beveled edge for full thickness of course or make a suitable lap joint.

    Remove old material which has been cut away and lay new mix against fresh cut. If desired, a stout rope may be stretched across pavement where joint is to be made. When work is resumed, cut materials laid back to rope. Remove altogether with surplus material, and lay fresh mix against joint thus formed.

    Hot smoothing irons may be used for sealing joints, but in such cases exercise extreme care to avoid burning surface.

13. Except in an emergency, or where shown, open no portion of finished wearing course to traffic until twelve hours after completion of rolling.

**Std. 8/12/85**
**Revised 07/24/14**

# ITEM 2515

# CONCRETE PAVEMENT

I. GENERAL

A. This Item governs for construction of concrete pavement for roadways, driveways, turnouts, and concrete curbing. Unless specified otherwise in proceeding Special Provision or on Plans and/or Exhibits, pavement to conform to residential requirements.

B. Related Work (if utilized in this project)

1. Item 3310 - Concrete

2. Item 3200 - Concrete Reinforcement

II. MATERIALS

A. Concrete: Item 3310 - Concrete: Class as shown on Plans and/or Exhibits or in Proposal.

B. Reinforcing Steel: Item 3200 - Concrete Reinforcement: Bar size and type as shown on Plans and/or Exhibits.

C. Expansion Joint Material: To be in accordance with section and location as shown on Plans and/or Exhibits.

1. Fillers

a. Pre-molded

1) Asphalt filler board per ASTM D994-71.

2) Premolded joint material per ASTM D1751-73.

b. Wood

1) Redwood: Boards shall be heartwood and shall be free from sapwood, knots, clustered birdseye, checks & splits.

Maximum weight per cubic foot when oven dried to constant weight to be 30 pounds.

2) Other Woods: Cypress, Gum, Southern Yellow Pine, or Douglas Fir Timber may be used with prior approval of the Engineer. With the exception of Cypress, all boards shall have a creosote or penta chlorophenol treatment of 6 pounds per cubic foot. Maximum weight per cubic foot when oven dried shall not be greater than 30 pounds per cubic foot.

c. Joint Sealing Material

1) Per ASTM D1190-74. Also to be used in other types of joints as required.

2) Load Transmission Devices: To be of type and size as shown on Plans and/or Exhibits.

3) Metal Installing Devices: Such as welded wire bar chairs, bar stakes, marker channels, channel caps, deformed metal strips, etc. shall be as shown on Plans and/or Exhibits.

D. Forms

1. Pavement

a. Wood Forms: (Used only in residential construction to be 2X material, free from warps, bends, and kinks, and sufficiently true to provide a straight edge on concrete). Use precautionary methods to prevent leakage of mortar through or under side forms. Top of each form section, when tested with a straight edge, to conform to the requirements specified for the surface of completed pavement.

b. Metal Forms: Use metal forms of approved shape and section. Preferred depth of form to be equal to required edge thickness of pavement. Forms with depths greater or less than 1-inch of pavement thickness may be used. Forms with less depth than pavement thickness to be brought to required depth by securely attaching wooden planks of approved section and size to bottom of form. Use form section at least 10-feet in length, and provide for staking in position with not less than 3 pins. Use forms of adequate strength to withstand machine loads without visible springing or settlement. Use forms free from warps, bends and kinks, and sufficiently true to provide a straight edge on concrete.

Top of each form section, when tested with a straight edge, to conform to the requirements specified for the surface of the completed pavement. Use flexible or curved forms of wood or metal of proper radius for curves of 200-foot radius or less.

c. Slip Forms: Slip form equipment to be equipped with a longitudinal transangular finishing float adjustable to crown and grade. Float to extend across pavement to the side forms and/or slab.

2. Curbs

a. Wood or Metal: Wood or metal curb forms to be of approved section, straight and free of warp. Outside curb forms to have a depth at least ½- inch greater than height of curb. Rigidly attach inside curb forms (if desired) to outside forms.

b. Machine Laid: Equipment to conform to the requirements as specified under Article 111 Execution. Use flexible or curved forms of wood or metal of proper radius for curves but not to exceed radius recommended by curb machine manufacturer.

E. Metal Supports: Supports for reinforcing steel to be metal of approved shape and size, and spacing to conform to details shown on Plans and/or Exhibits.

F. Materials for Curing

1. Burlap: Mats to be in good condition, clean, and free of any substance which would have deleterious effect on concrete.

2. Cotton Mats: Mats to be in good, clean, and free of any substance which would have deleterious effect on concrete.

3. Waterproof Paper: Per ASTM C171-69.

4. Membrane Curing Compounds: Conform to ASTM C309-74.

5. White Polyethylene Sheeting: Sheet having thickness not less than 4 mils (.004-inch).

G. Grouting

1. Material and mixtures for grouting curb dowels.

a. Proportion by weight.

b. One part Portland cement, Type I or Type II.

c. One part clean, sharp sand.

d. Seven-tenths part nonshrinking grout aggregate.

e. No more than 5½ gals. water per sack cement.

2. Other: Use mixture by weight of one part Portland cement and two parts sand for general purposes. If space to be grouted is less than one inch and is impossible to tamp grout, use one-to-one mix. Where space to be filled with grout is large, use original concrete mixture. Use stiff mixture for grout to be tamped, produced by prolonged mixing. To obtain stiff grout, mix mortar using amount of water required to thoroughly mix ingredients, then continue mixing without additional water until grout is stiff enough to be compacted by tamping when placed. For grouting blockouts for embedded pipes and similar items, use grout to which 5 pounds of nonshrinking grout aggregate per sack of cement has been added.

## III. EXECUTION

A. Subgrade: Excavate, shape, and compact subgrade to grades, sections and densities shown on Plans and/or Exhibits. Maintain drainage of subgrade at all times. Test subgrade section with an approved template, operated and maintained by Contractor. Wet down subgrade sufficiently in advance of placing pavement. No pavers, batch trucks, or other equipment to be permitted between forms during paving operations.

B. Wood and Steel Forms

1. Setting: Set forms on compacted subgrade, cut true to grade on that entire form section is supported by subgrade. Stake metal form sections with at least 3 pins per section, with a pin on each side of every joint. Adequately stake wood form sections to prevent bows in form and to keep form sections to grade. Join form sections to prevent displacement. Clean and oil forms with form oil each time they are used. Set forms to line and grade for at least 200-feet ahead of mixer. Check conformity of alignment and grade immediately prior to placing concrete.
2. Removal: Leave forms in place for at least 12 hours. Remove forms without injury to concrete. Immediately repair damage resulting from form removal. Point up all exposed honeycombed areas with approved mortar. As soon as curb forms are removed, backfill behind curbs with approved material and compact to 90 percent Standard Proctor density.

C. Slip Forms: Equipment to be provided with traveling side forms of sufficient dimensions, shape and strength to support concrete laterally for sufficient length of time during placement to produce pavement of required cross-section. Concrete to be distributed uniformly into final position by slip form paver and horizontal deviation in alignment of edges not to exceed 1¼-inches from established alignment.

D. Concrete Placing and Handling - Wood and Steel Forms

1. Deposit concrete on subgrade in such manner as to require as little rehandling as possible. Use shovels for hand spreading of concrete. Use of rakes will not be permitted. Place concrete in a rapid, continuous operation.

2. Consolidate all concrete placed for pavement by an approved mechanical vibratory unit designed to vibrate the concrete internally. A vibratory member equipped with synchronized vibratory units to extend across pavement practically to, but not to come in contact with, side forms. Space separate vibratory units at sufficiently close intervals to provide uniform vibration and consolidation to entire width of pavement. Mount mechanically operated with vibrators in such manner as not to come in contact with forms or reinforcement and not to interfere with transverse or longitudinal joints.

3. Furnish hand-manipulated mechanical vibrators in number required for provision of proper consolidation of concrete along forms, at joints, and in areas not covered by mechanically controlled vibrators.

E. Concrete Placing and Handling - Slip Forms

1. Concrete, for full paving width, to be effectively consolidated by internal vibration, with transverse vibrating units, or with a series of longitudinal vibrating units. Internal vibration to mean vibration by means of vibrating units loaded within the specified thickness of pavements section and at a minimum distance ahead of screed equal to pavement thickness.

2. When concrete is being placed adjacent to an existing pavement, that part of the equipment which is supported on the existing pavement to be equipped with protective pads on crawler tracks or rubber-tired wheels, offset to run a sufficient distant from edge of pavement to avoid breaking or cracking pavement edge.

3. After concrete has been given a preliminary finish by finishing devices incorporated in the slip-form paving equipment, surface of the fresh concrete to be checked with a straightedge to tolerances and finish required.

F. Concrete Placing and Handling - Wood or Metal Formed Curb: Curbing may be poured monolithic with pavement or may be added to pavement surface at a latter time. Place curb dowel bars while pavement is plastic. Provide expansion joint and contraction in curb opposite each expansion joint or contraction joint in pavement and at each curb inlet. Use same expansion joint material as used in pavement. Cut weakened plane joints with an approved grooving tool opposite each joint in pavement, as required. Apply finish coat of mortar on exposed surfaces of curb. Mortar composed of one part Portland cement and two parts sand. Apply mortar with a template or "mule" conforming to plan curb dimensions. Steel trowel finish all exposed surfaces of curb and brush to a smooth, uniform surface.

G. Concrete Placing and Handling - Machine-Laid Curb

1. Lay curbs by an extrusion-type machine. Immediately prior to placing of the curb, thoroughly clean the previously approved foundation.

2. Grade and alignment for top of curb to be as shown on Plans and/or Exhibits. The forming tube of the extrusion machine to be readily adjustable vertically curing the forward motion of the machine, to provide required variable height of curb necessary to conform to the established grade line.

3. Feed concrete into machine in such a manner and at such consistency that the finished curb will present a well-compacted mass with a surface free from voids and honeycomb and tree to established shape, line, and grade.

4. Perform any additional surface finishings specified and/or required immediately after extrusion. Construct joints as specified or as shown on Plans and/or Exhibits.

H. Finishing

1. Nonresidential Pavements: Finish concrete pavement by power-driven transverse finishing machines and longitudinal finishing machines. Provide transverse finishing machine with two screeds accurately adjusted to crown of pavement. Ride transverse finishing machine on forms, so designed and operated as to strike off and consolidate concrete. Make at least two trips over each area, or more if necessary. Provide longitudinal finishing machine with a longitudinal float not less than 10-feet in length, adjusted to a true plane. Ride longitudinal finishing machine on forms, so designed and operated as to finish pavement to required grade. Equip finishing machines with rubber tires to roll on concrete pavement. Just before concrete becomes non plastic, belt pavement surface with a canvas

or canvas-rubber composition belt of two-ply or four-ply construction, not less than 6-inches nor more than 10-inches wide, and at least 2-feet longer than width of pavement. Use short transverse strokes and rapid advance longitudinally to produce uniform surface of gritty texture.

2. Residential Pavements: Concrete pavement may be finished by machine or by hand. If by machine see Paragraph H1 above. If finished by hand thoroughly vibrate concrete around reinforcement and embedded fixtures. Tamp concrete with a tamping template made of 4-inch by 10-inch lumber or equivalent metal section at least 2-feet longer than width of pavement to conform to crown section of pavement. If wood tamping template is used it is to have a steel face not less than 3/8-inch in thickness. Strike off concrete with a strike-off screed made of 4-inch by 10-inch lumber or equivalent metal section at least 2-feet longer than width of pavement and conforming to crown section of pavement. Move strike-off screed forward with combined transverse and longitudinal motion in direction work is progressing, maintaining screed in contact with forms, and maintaining slight excess of materials in front of cutting edge. Use a longitudinal float not less 10-feet in length to level surface. Prior to concrete becoming nonplastic, belt pavement surface with canvas or canvas-rubber composition belt of two-ply or four-ply construction not less than 6 inches or more than 10-inches wide and at least 2-feet longer than width of pavement. Use short transverse strokes and rapid advance longitudinally to produce uniform surface of gritty texture.

3. Slip Form: If this method of construction is used all requirements of this Technical Specification in regard to subgrade and pavement tolerances, pavement depth, alignment, consolidation, finishing, workmanship, etc. to be met. Equip “slip form paver” with longitudinal triangular finishing float adjustable to crown and grade. Extend float across the pavement almost to the side form and/or the edge of slab.

I. Surface Tests

1. Test entire surface before initial set and correct irregularities or undulations to bring surface within requirements of following test, then finish.

2. Place approved 10-foot straight edge parallel to center of roadway so as to bridge any depressions and touch all high spots. Ordinates measured from face of straight edge to surface of pavement not to exceed 1/16-inch per foot from nearest point of contact, and in any case maximum ordinate to 10-foot straight edge to be no greater than 1/8-inch.

J. Joints: Place joints of types shown on Plans and/or Exhibits at required locations and at spacing shown.

1. Construction Joints: Place transverse construction joint when necessary to stop concrete placement for period of more than 30 minutes. Length of slab to be not less than 10-feet from nearest joint of complete slab. If closer than 10-feet Contractor to remove concrete from between forms back to nearest normal joint and place construction joint at bulkhead. Use longitudinal keyed construction joints at pavement edges where required.

2. Expansion Joints: Place expansion joint at radius points of curb returns for cross-street intersections, or as shown on Plans and/or Exhibits. Do not use boards less than 6-feet in length. When pavement is 24-feet or less in width, use not more than two lengths of board. Secure pieces to form straight joint. Shape board filler accurately to cross- section of concrete slab. Use premolded joint filler, accurately shaped, in curb section. Load transmission devices to be of type and size shown on Plans and/or Exhibits. Use joint sealing compound as required.

3. Contraction Joints: Make straight and place at spacings shown on Plans and/or Exhibits. Place asphalt-coated smooth dowels accurately and normal to joint. Tool edges of groove and seal with joint sealing compound.

4. Longitudinal Weakened Plane Joints: Form longitudinal weakened plane joint by an approved continuous metal shield or an asphalt impregnated felt strip placed continuously behind longitudinal float by a machine of the flex plane type.

K. Protection and Curing: Following requirements apply on alternate methods of curing. Cover concrete with burlap or cotton mats when concrete has hardened sufficiently to prevent marring of surfaces and keep wet continuously for 72 hours. Apply curing compound immediately after free water has disappeared and at rate specified. Keep polyethylene sheets or membrane curing film in place and intact for five days in lieu of 72 hours of curing. Cure concrete curbs and gutters to prevent checking while setting. After each day's run barricade street. No wheeling will be allowed on concrete during curing period. Do not open pavement to traffic until concrete is at least 7 days old. Clean off pavement and seal joints before opening pavement to any traffic.

L. Penalty for Deficient Concrete Pavement Thickness: It is the intent of this specification that the concrete pavement be constructed in strict conformity with the thickness and typical sections shown on the Plans and/or Exhibits. Where any such pavement is found not so constructed, the following rules relative to adjustment of payment for acceptable concrete pavement and to the replacement of faulty concrete pavement shall govern.

1. Pavement Thickness: The concrete pavement will be core drilled by a testing lab prior to final acceptance. The thickness of the pavement will be determined by measurement of the cores. At such points as the Engineer may select in each unit, one core will be taken for each 1000 square yards of concrete pavement, or fraction thereof, in the unit. However, a minimum of four cores are required for any pavement area. If the core so taken is not deficient more than 0.25-inch, full payment shall be made and the cores will be paid for by the Owner. If the core is deficient in thickness by more than 0.25-inch but not more than 0.5-inch, two additional cores will be taken from the area represented and the average of the three cores determined. If the average measurement of these three cores is not deficient more than 0.25-inch from the plan thickness, full payment will be made. If the average thickness of the three cores is deficient more than 0.25-inch, the sections having such deficiencies shall be removed and the concrete pavement shall be replaced to the specified plan depth.

2. No additional payment over Contract unit price to be made for pavement of thickness exceeding that required by Plans and/or Exhibits.

3. Additional 6-inch cores required to determine area of deficient thickness to be paid for by Contractor.

**Std. 5/19/87**
**Revised 5/10/16**

# ITEM 2555

# WATER PIPING

## I. GENERAL

A. Scope: This section specifies furnishing and installing new water mains including valves, valve boxes, flush valves, blocking, fittings, and other appurtenances.

B. Related Work (if utilized in this project)

1. Item 2221 - Excavation, Trenching and Backfilling for Utilities

2. Item 9901 - Painting and Coating

## II. MATERIALS

A. Ductile Iron Pipe

1. Furnish ductile iron pipe manufactured in accordance with AWWA C-151/A21.50. Pipe to be of American manufacture. Ductile iron pipe to be of thickness class per Plans and/or Exhibits in accordance with AWWA C-150/A21.51. Manufacturer to furnish Certification of Compliance.

2. Unless shown otherwise on Plans and/or Exhibits or required herein, push-on joints to be considered standard.

3. Where Plans and/or Exhibits or specifications indicate cast iron fittings or ductile-iron fittings, the terms are to be considered interchangeable. Such fittings are to conform to AWWA C-110 for 200 psi working pressure. Joints shall be consistent with intended use as shown on drawing. Where no joint type is indicated in cast iron pipe runs, push-on is to be considered standard. Manufacturer to provide Certification of Compliance, "restrained" mechanical joints, to have welded ring on spigot, or other approved design.

4. "Flanged and flanged" and "flanged and plain end" pipe shall be in conformity with AWWA C-115.

5. All C.I. and D.I. pipe and fittings shall be furnished with cement-mortar lining conforming to AWWA C-104-08, standard thickness.

6. All material to be approved by Underwriters' Laboratory and accepted without penalty by the Texas Fire Insurance Commission.

B. Steel Pipe

1. Provide steel pipe intended for use as underground carrier pipe, sizes 4-inches through 24-inches, conforming with AWWA C-200-12; 150 psi working pressure; cement-mortar lining per AWWA C-205-12.

2. Minimum wall thicknesses for carrier pipe must meet the following criteria:

| **Nominal Pipe Size (Inches)** | **Outside Diameter (Inches)** | **Minimum Wall Thickness (Inches)** | **LBS Per Lineal Foot, Uncoated** |
|---|---|---|---|
| 4 | 4.500 | 0.250 | 11.35 |
| 6 | 6.625 | 0.280 | 18.97 |
| 8 | 9.625 | 0.322 | 28.55 |
| 10 | 10.750 | 0.365 | 40.48 |
| 12 | 12.750 | 0.375 | 59.56 |
| 16 | 16.000 | 0.375 | 62.58 |
| 18 | 18.000 | 0.375 | 70.59 |
| 20 | 20.000 | 0.375 | 78.60 |
| 24 | 24.000 | 0.375 | 94.62 |

3. Furnish pipe with beveled ends for field butt welding.

4. Coat the pipe exterior in accordance with Item 9901 - Painting and Coating.

5. Furnish new and unused pipe manufactured in compliance with Underwriters' Laboratories, Inc. specifications, Steel Pipe Lines for Underground Water Service. Pipe must be acceptable, without penalty, to the Texas Fire Insurance Commission for use in water works distribution systems.

6. Where small diameter steel pipe is required, it is to be ASTM A-53 or 120, Schedule 40, galvanized.

C. Pre-tensioned Concrete Cylinder Pipe

1. Pipe scheduled for underground water main unless another material specifically named, is to be reinforced concrete water pipe-steel cylinder

type, pre-tensioned, conforming to AWWA C-303-08, unless shown otherwise on Plans and/or Exhibits. The concrete cylinder pipe is to also be approved by Underwriters' Laboratory and accepted by the State Fire Insurance Commission without penalty.

2. The manufacturer will be supplied all necessary data per Sec. 1.4 of said specification. He shall promptly submit, per Sec. 1.6 (C-303-08) detailed Plans and/or Exhibits and schedules and tabulated layout schedule. Each piece shall be marked thereon with an identification number, and each piece subsequently manufactured shall be so marked per Sec. 1.7 (C303-08).

3. Quality control test reports on steel, cylinder assembly, and concrete shall be submitted to the Owner through the Engineer. An Affidavit of Compliance shall be similarly provided.

4. The design working pressure of the pipe is to be 150 psi, the design transient pressure is to be 100 psi. The external loading condition is to be; Live Load-AASHO H20, Dead Load-30" cover to 15-feet saturated clay backfill; bedding as shown on details and described herein. Pipe to be considered rigid.

5. Joints, except where specifically otherwise designated to be compressed rubber "O" Ring" type. In general, thrust is to be transferred to earth by skin friction through tack-welded joints. All vertical fittings to be welded, as well as horizontal bends not noted on Plans and/or Exhibits as requiring blocking. Manufacturer to submit detail and incorporate in layout.

6. Flanges on steel cylinder pipe to conform to AWWA C-207-07, Class E, or ASA Series 150, flat-faced.

7. Spigot ends to match C.I. fittings to have O.D. matching cast iron.

8. All joints to be externally mortared in accordance with manufacturer's recommendations. All joints on 18-inch and larger to be internally mortared in accordance with manufacturer's recommendations.

9. Tapped or special connections to be mortared, no exposed metal pipe.

D. Polyvinyl-Chloride Pipe

1. PVC pressure pipe, 4-inch and larger diameter, to conform to AWWA C-900-07, or AWWA C-905-10, minimum 150 psi rated, elastomeric ring joints unless otherwise required.

2. PVC Pressure Pipe, 3-inch and smaller, is to conform to ASTM D-1785, and ASTM D-2241, Class 160. Class 160 in 1½-inch, 2-inch, and 3-inch diameters to have elastomeric seal joints, ASTM D- 3139. Smaller pipe to be solvent welded.

E. Copper Tubing

1. Provide Type K copper tubing for underground service where required in ¾-inch, 1-inch, 1½- inch, and 2-inch sizes. The tubing to be Type K, soft-annealed, with proper bending temper.

2. Tubing must meet requirements of ASTM B-88 and Federal Specification WW-T-799.

F. Polyethylene Pipe

1. Polyethylene pipe and tubing, hereinafter called PE pipe or tubing, shall conform to AWWA C-901-08, PE 3408 material, Class 160.

2. All coils of PE tubing shall be spirally wrapped in heavy water resistant paper or packaged in cardboard boxes. Each coil shall be labeled clearly to show the size, coil length and pressure rating of the tubing.

G. Fittings for Service Connections: Provide brass fittings in conformance with AWWA C-800-12.

H. Gate Valves: Resilient Wedge, NRS gate valves with iron body, fully encapsulated resilient wedge seats conforming to AWWA C-515-09. Valve ends to be of type indicated on Plans and/or Exhibits, or if not indicated, mechanical joint or hub or gasketed appropriate for the connecting piping. M.J. bolt holes to straddle centerline. Underground valves to be provided with 2-inch square operating nut, aboveground with handwheels. Stem seals to be "O" ring. Stem to turn counterclockwise to open. M.J. bolts to be cadmium plated.

I. Butterfly Valves: Furnish butterfly valves for locations shown on Plans and/or Exhibits conforming to AWWA C-504-10. Valve ends to be short body flanged or mechanical joint as indicated on Plans and/or Exhibits. Valve to have stainless steel body seat and 360 degrees rubber seat on vane. Seat to be site replaceable. "O" ring shaft seal. Valves for underground locations to be fitted with manual underground operator, 2-inch square nut, opening counterclockwise. Above ground valves to be fitted with crank operator, opening counterclockwise. M.J. bolts to be cadmium plated. Manufacturer to furnish Certificate of Compliance.

J. Flexible Component

1. Flanged Adapters: Up to 12-inches, to be Rockwell Type 912 or approved equal, larger than 12-inch diameter, to be Rockwell Type 913 or approved equal. For "lock" type furnish with locking studs for 12-inches and smaller; furnish harness assembly for larger adapters.

2. "Dresser" Couplings: Cast couplings for cast iron pipe; Dresser Style 38, 53, 153 or Rockwell Type 43D series.

K. Fire Hydrants: Fire hydrants shall meet or exceed the requirements specified in AWWA C502, latest revision, and shall comply with Factory Mutual Research Corporation and Underwriters' Laboratories UL Standard 246. The minimum rated working pressure shall be 200 psi with a minimum test pressure of 400 psi. Hydrants shall comply with the following specific design criteria:

1. Main valve closure shall be compression type, opening against the pressure and closing with the pressure.

2. Fire hydrants shall be traffic models, with breakable stem coupling. Traffic feature to be designed so the nozzle section of the hydrant can be rotated (by degree) to full 360 degree circle to face the nozzles in any direction. The internal hydrant rod shall be two piece, held together by a breakable coupling designed to snap upon vehicular impact. The hydrant barrel shall have a two piece breakable flange at the bottom of the upper barrel.

3. The main valve opening shall not be less than 5¼-inch. Unit to be designed so removable hard rubber seat, drain valve mechanism, internal rod, and all working parts can be removed through the top of the hydrant. These parts shall be removable without disturbing the ground line joint or the nozzle section of the hydrant. The bronze seat shall be threaded into matching threads of bronze for ease of field removal.

4. Hydrants shall be equipped with positive operating, non corrodible drain valves. The draining system shall be bronze and activated by the main stem without the use of an axillary rod, toggles, pins, etc. The drain mechanism shall be completely closed after no more than three turns of the operating nut in the opening direction. There shall be a minimum of two (2) inside ports and four (4) drain port outlets to the exterior of the hydrant. Drain shut-off to be direct compression closure. Sliding drain seals are not acceptable.

5. Hydrant shall be a dry-top type. There shall be an internal top housing with triple O-rings to seal operating threads from the waterway and accommodate an anti-friction washer.

6. The operating nut and stem shall be capable of withstanding an input torque of 200 ft-lbs in opening or closing directions.

7. Hydrant shall be equipped with sealed grease lubrication.

8. Hydrant shall have two (2) 2½-inch hose nozzles and one (1) 4½-inch 4½TPI pumper nozzle. All nozzles to be NST 2½ 7.5 TPI. Nozzle section of hydrant to be designed to permit field replacement of damaged threads without special tools, excavation, or disturbing the ground joint. Bronze nozzles are to be locked into hydrant barrel with locking lugs and sealed by heavy duty O-ring. Each nozzle to be equipped with weather cap with 1½-inch operating nut. Hydrant shall be a minimum of 18-inches from ground line to center of hose nozzle.

9. Hydrant to be equipped with 1½-inch operating nut. Direction of opening shall be counterclockwise, with appropriate markings plainly visible to so indicate.

10. Hydrants shall have 6-inch M.J. shoe connection.

11. Unless otherwise shown, depth of bury shall be 4-feet with a minimum weight of 500 pounds at this bury. Hydrants shall be designed to permit extension without excavation.

12. Friction loss through hydrant shall not exceed 3.0 psi at 1000 gpm through pumper nozzle. Flow testing and certification of this feature shall be conducted by an independent testing laboratory and be in accordance with AWWA C502-05.

13. Fire hydrants are to be Mueller or American Darling.

L. Valve Boxes: Furnish 3-piece cast iron valve boxes, with base sizes to fit valve bonnet. Shaft shall be 5¼-inch diameter. Lids marked "WATER." All pieces shall be asphalt-dipped. For valves located outside of roadway, Tyler Series 6860 screw type or 6" (PVC SDR-26) with cast iron section A and LID, to be furnished. For valves located within roadway, Tyler Series 6865 slip type, or equal. Extensions of proper length to be supplied.

## III. EXECUTION

A. General: Except as required otherwise by these specifications or by Plans and/or Exhibits, piping is to be installed in accordance with the applicable provisions of the following:

1. Ductile cast iron water mains and appurtenances - AWWA C-600-10.

2. ASTM D-2321 - Recommended practice for underground installation of flexible thermoplastic pipe.

B. Pipe Handling

1. Pipe shipped to the job shall be properly protected against normal forces during transit from manufacturing site to project site.

2. Contractor shall provide and employ slings, lifting cables, strong backs, etc. as recommended by manufacturer in handling pipe, fittings and appurtenances on the job. Proper care against damage from rough handling shall be exercised at all times. Under no circumstances will pipe for fittings be dropped, nor will pipe be allowed to slam together.

3. Pipe is to be strung only on street right-of-way and easements; water pipe is never to be strung in drainage ditches. Strung pipe shall not be placed so as to prevent or unreasonably obstruct access of people or vehicles to residences or to businesses. Loose items such as joint assembly material are not to be left in street right-of-way. Delivery of piping materials is to be scheduled so that pipe is strung a maximum of 2 weeks prior to pipe laying.

4. Particular care is to be taken to avoid damage to pipe that is cement mortar lined.

5. Pipe will be strung so bells or belled couplings face in the direction of laying advancement.

C. Pipe Laying General

1. Use specified piping materials corresponding to the material, size, type, etc. indicated on Plans and/or Exhibits.

2. Do not lay pipe in water, or when trench or weather are unsuitable for work, except with permission of the Engineer. Keep water out of trench until jointing is complete. When work is not in progress, close ends of pipe and fittings securely so that no trench water, earth or other substance will enter pipes or fittings.

3. Keep the inside of the pipe free from foreign matter during operations by plugging or other approved method.

4. Place pipe so that the full length of each section rests solidly upon the pipe bed, with recesses excavated to accommodate bells and joints. Take up and relay pipe when the grade or joint is disturbed after laying.

5. Locate no joints closer than 9-feet from sanitary sewers. Where possible, lay water lines 9-feet above sewers at crossings.

6. Where pipe ends are left for future connections, install valves, plugs or caps, as shown. Provide thrust blocking or joint restraint as necessary to prevent pipe or fitting movement.

7. Handle pipe and accessories so that all pipe placed in the trench is sound and undamaged. Take particular care not to injure pipe coating.

8. Cut cast iron neatly, using approved type mechanical cutter without damaging pipe. Cutting by cutting torch is strictly prohibited. Use wheel cutters when practical. Saw asbestos-cement and PVC with sharp saw with properly set teeth.

9. Before installation, inspect pipe for defects. Replace sections of pipe found to be defective, damaged or unsound.

10. Pipe barrels to be clean at time of joining. Swab as required to remove dirt, mud and other foreign matter.

D. Bedding and Pipe Placement: Refer to Item 2221 - Excavation, Trenching and Backfilling for Utilities

E. Joints

1. Make of joints generally to be in accordance with manufacturer's directions and referenced standards.

2. For pipes using a compressed elastomeric gasket joints, bell and spigot surfaces and gasket shall be clean. Area adjacent to gasket and gasket groove to be free of foreign particles. Spigot beveled as required. Gasket or spigot end lubricated per manufacturers directions. The two pieces to be joined are to be in axial alignment and restrained from rotating around the axis, until the pipe is "home." The position of the gasket is to be checked all around with a feeler gauge when so recommended, or other recommended checks made to insure proper gasket positioning, and/or pipe and end gap. Pipe ends are not to be butted. The force necessary to push the pipe "home" shall be closely controlled, applied in such a manner as not to displace nor damage piping being joined.

3. Mechanical joints and flexible couplings to be made up similar to “push” joints. Pipe alignment to be within tolerance of joint. Gasket to positioned all bolts made up evenly using a torque wrench of the recommended rating, bolts and nuts positioned and tightened in every hole.

4. Flange Joints

   a. Flange faces to be clean. Pieces to be joined are to be in precise alignment and fit up to be snug without springing. Gasket to be carefully positioned and bolts pulled up evenly. Bolts or studs to be properly tightened in every hole. Closures shall not require pull up by bolting for fit. Special care to be taken at equipment, valve or fitting so that fit is good and flange makeup does not distort equipment.

   b. Use flat face companion flanges only with flat faced fittings, valves or equipment. Otherwise use raised face flanges.

   c. Install 1/16-inch asbestos gasket full-face excepting ring for raised face, suitable for intended service and factory cut to proper dimensions. Secure ring gaskets with a suitable gasket cement.

   d. Use ANSI nuts and bolts, galvanized or black to match flange material. Use cadmium plated nuts and bolts underground. Tighten bolts progressively to prevent unbalanced stress. Draw bolts tight to ensure proper seating of gaskets. Joints to be water tight.

   e. Keep flange covers on equipment and shop-fabricated piping until ready to install in system.

5. Plastic

   a. When using threaded joints provide sharp, clean pipe dies and Teflon thread tape. Make joints in strict accordance with manufacturer’s recommendation.

   b. When gluing PVC, use solvent cement method in strict accordance with manufacturer’s recommendations, and ASTM D- 2241. Allow proper drying time.

   c. Compressed elastomeric joints to be made up in accordance to manufacturer’s recommendations.

F. Joint Deflection: Joint deflection shall in no case exceed the manufacturer's recommendations. Push-on type joints shall have deflections taken only after pipe is "home." Mechanical type joints to be deflected prior to final tightening.

G. Thrust Resistance

1. Responsibility of thrust resistance shall be the responsibility of the Contractors.

2. Thrust blocking shall be provided at all fittings. The concrete shall bear on undisturbed firm soil. If unavailable at a particular installation, the absence shall be promptly brought to the Engineer's attention. Place concrete so that joints are left accessible.

3. Restrained Joints: Where flexible joints are shown as "lock" or "restrained," resistive restraint devices capable of being dismantled and with ample ability to transfer the thrust shall be engaged so as to positively prevent pipe separation.

H. Underground Protection, Cast and Ductile Iron

1. Where indicated on the Plans and/or Exhibits underground ductile and cast iron shall be wrapped in polyethylene film in accordance with AWWA C-105.

2. Where indicated on the Plans and/or Exhibits underground metal piping shall be cathodically protected.

I. Setting Underground Valves, Valve Boxes, and Flushing Valves

1. Prior to installing valves or flushing valves, remove foreign matter from within the valves. Inspect the valves in open and closed positions to verify that all parts are in satisfactory working condition. Refurbish existing valves to be used again, installing new seats and seals and generally repair the valves. Install fully closed.

2. Install valves, valve boxes, and flushing valves where shown or as located by the Owner. The gate valves and flushing valves plumb and as detailed on Plans and/or Exhibits. Set butterfly valve with shaft true horizontal. Center valve boxes on valves. Locate valves away from roads or streets. Carefully tamp earth around each valve box for a minimum radius of 4-feet or to undisturbed trench face if less than 4-feet. Set flushing valve 2-feet from the edge of the right-of-way, such that connecting pipe will not have less cover than distributing mains.

3. Place a concrete thrust block opposite pipe connections, set against the vertical face of the trench to prevent the valve from moving. If the character of the soil is such that the flushing valve cannot be securely wedged in this manner, provide bridle rods and rod callars of not less than ¾-inch stock protected by a coat of acid- resisting paint.

4. Place pea gravel around the base of flushing valves to ensure drainage. Compact backfill thoroughly around the valve to grade line.

5. Valve boxes to be set vertical, with bases of proper size fitted over valve bonnets, slip type boxes to be used where box exposed to traffic. Boxes to be set with tops flush with finish grade. Slip type box top-piece shall not be on step. Backfill to be tamped around box to ensure stability of its placement.

J. Service Connections: Tubing to be made up slack in trench, free of kinks and crimps. Minimum radius for bends to be 12D. No connectors permitted under pavement. Connections to meter not to disturb or distort meter setting. Service piping to generally slope toward meter. Minimum cover under drainage ditches to be 18-inches. Where direct taps to the main are made, the tapping machine is to be secured on the main so that it does not wobble during drilling and tapping. Dies are to be sharp, and for tapered thread (Mueller). Where a service saddle is required; the saddle is to be securely tightened and a clean hole drilled in the main. Position the tap as indicated in the Plans and/or Exhibits. Corporation stops are to be made up tight and leakproof. The service line shall be kept clean at all times. Flaring shall be accomplished by the use of suitable flaring tools. Remove all burrs. All fittings shall have the proper “bite” on the tubing and be made tight. Tap to be perpendicular from main to meter box, or as near thereto as permitted by the joint. In general, taps to be made on new main at time of laying, (i.e. dry). Main to be flushed, disinfected and hydrostatically tested, then service tubing run. Prior to final connection to existing service or to meter or to existing service or to stop for future meter installation, service is to be thoroughly flushed. This is to be done through a large hose or pipe to drain into ditch or gutter, and including the stop, if any. Service tubing to be bedded and backfilled as per Item 2221 - Excavation, Trenching and Backfilling for Utilities.

K. Hydrostatic Testing and Disinfection Sequence: New sections of main being installed in many cases will be tied in one or more places to valves separating the new main from the operating system. In all instances, unless approved in writing by Engineer prior to testing, a zone of atmospheric pressure will be maintained between existing main and newly constructed main until new main has been disinfected and accepted. In most instances, use of temporary valve assemblies will permit hydrostatic testing to promptly follow main line completion of section, without the danger of pumping contaminated water back into the operating system through a leaking valve. In case that the particular circumstances do not permit

effective isolation, the Contractor shall be obliged to reverse the usual order and disinfect the new mains first, then hydrostatically test, redisinfect after any rejoins.

L. Hydrostatic Test: After each section of main is complete and can be isolated so high pressure cannot force test water into the operating system, it shall be hydrostatically tested. Such testing shall be in conformance with Section 4 of AWWA C-600, as modified herein:

1. Test section to be first flushed with open bleeds with flow controlled at feed from operating system so that flushing pressure is always well below operating system.

2. Pressure Testing: Pressure testing should be done when the trench is only partially backfilled to allow for repairs if necessary. The operator should follow this procedure:

   a. The pressure test should be performed after the main has been full of water for 24 hours. When filling the main, water should be admitted slowly to expel all air.

   b. Pressure should be obtained and maintained by pumping water into the line through a meter. Test pressure should be 1½ times as great as the normal operating pressure or 150 psi, whichever is greater.

   c. After two hours at test pressure, the leakage should be within limits for that type of line.

3. A test, to be successful, must be witnessed by the Engineer's field representative, minimum 2 hours in duration and conducted during reasonable hours.

4. The Contractor is to furnish all necessary equipment and calibrate to approved standards.

5. Allowable Leakage: No pipe installation will be accepted if the leakage is greater than that determined by the following formula:

$$L = \frac{SD\,(P^{1/2})}{133{,}200}$$

in which L is the allowable leakage, in gallons per hour; in feet S is length of pipe line tested; D is the nominal diameter of the pipe in inches; and P is the average test pressure during leakage test, in pounds per square inch gauge. Allowable leakage is determined from Table 6A, AWWA C-600.

6. In case of failure, the Contractor shall find and repair the leaks until the test section meets the minimum requirements.

7. When temporary inserts for hydrostatic testing are installed, upon removal the replacement piping shall be left exposed for visual inspection for leakage under normal pressure (after disinfection), before being backfilled.

8. The Owner will provide flushing and testing water only one time at no cost to Contractor. All retest costs, where additional water is required, will be borne by the Contractor. The Owner will, at Contractor's option, allow reimbursement or deduct these costs from the final estimate.

M. Disinfection: Disinfection for each section of the work shall be performed in accordance with AWWA C-651, as supplemented and modified below:

1. The Contractor shall provide taps within a few feet of the ends of the disinfection section and bleed so as to insure high strength solution to all parts of the section.

2. Unless otherwise approved, hypochlorite shall be used to supply the available chlorine.

3. Continuous feed methods to be used. The Owner will furnish the water one time only at no cost. The Contractor shall provide the chlorine solution tank and means of approximately proportioning its flow. Piping from hydrants of the dilutant water and all other piping and appurtenances to be furnished by the Contractor. Contractor to perform the disinfection and subsequent flushing.

   All retest costs, where additional water for biological testing is required, will be borne by Contractor. Owner will, at Contractor's option, allow reimbursement or deduct from final estimate these costs.

4. The strong chlorine solution must be flushed from the test section. The Contractor shall provide means to discharge into an open drainage ditch or, into a mixing box discharging to storm sewer. The flushed chlorine solution must not be a potential cause for environmental damage. Contractor must neutralize thoroughly any remaining chlorine residual within the water. Where applicable, Federal, State, and Local Regulatory Agencies must be contacted to determine special requirements for disposal of heavily chlorinated water.

5. The Owner will cause bacteriological samples to be taken and tested. If negative for coliform organisms, the Contractor may proceed with the next step of the work; otherwise the disinfection procedure is to be repeated.

6. The Contractor may place tablets in the main for his benefit, but such is not to be a substitute for the above procedure.

N. Wet Connection

1. Wet connections are to be made under the direction of the Engineer and in such a manner and at such hours as to least inconvenience the public. Notify Project Manager at least 72 hours in advance of making connections. Conduct connection operations when inspector is at job site. When the existing mains have been cut or a plug removed for a connection, then the work or making the connection shall progress without interruption until complete. The compensation for making wet connections will be based on the unit bid prices and no additional compensation will be granted for making connections at night or for having to complete a connection under unfavorable working conditions.

2. No compensation will be given for extra work or for damages occurring as result of incomplete shutoff.

3. Wet connections consist of isolating sections of pipe to be connected with existing valves, draining isolated sections, and completing connections. Tapping sleeve and valves, and service connections are **not** wet connections.

**Std. 3/22/96**
**Revised 10/1/02**

## ITEM 2566

## UTILITIES SEPARATION DISTANCES

The following rules apply to separation distances between potable water and wastewater treatment plants, waterlines, and sanitary sewers.

A. Waterline/new sewer line separation. When new sanitary sewers are installed, they shall be installed no closer to waterlines than nine feet in all directions. Sewers that parallel waterlines must be installed in separate trenches. Where the nine foot separation distance cannot be achieved, the following guidelines will apply:

1. Where a sanitary sewer parallels a waterline, the sewer shall be constructed of cast iron, ductile iron or PVC meeting ASTM specifications with a pressure rating for both the pipe and joints of 150 psi. The vertical separation shall be a minimum of two feet between outside diameters and the horizontal separation shall be a minimum of four feet between outside diameters. The sewer shall be located below the waterline.

2. Where a sanitary sewer crosses a waterline and the sewer is constructed of cast iron, ductile iron or PVC with a minimum pressure rating of 150 psi, an absolute minimum distance of 6-inches between outside diameters shall be maintained. In addition the sewer shall be located below the waterline where possible and one length of the sewer pipe must be centered on the waterline.

3. Where a sewer crosses under a waterline and the sewer is constructed of ABS truss pipe, similar semi-rigid plastic composite pipe, clay pipe or concrete pipe with gasketed joints, a minimum two foot separation distance shall be maintained. The initial backfill shall be cement stabilized sand (two or more bags of cement per cubic yard of sand) for all sections of sewer within 9-feet of the waterline. This initial backfill shall be from one quarter diameter below the centerline of the pipe to one pipe diameter (but not less than 12-inches) above the top of the pipe.

4. Where a sewer crosses over a waterline all portions of the sewer within 9-feet of the waterline shall be constructed of cast iron, ductile iron, or PVC pipe with a pressure rating of at least 150 psi using appropriate adapters. In lieu of this procedure the new conveyance may be encased in a joint of 150 psi pressure class pipe at least 18-feet long and two nominal sizes larger than the new conveyance. The space around the carrier pipe shall

be supported at 5-feet intervals with spacers or be filled to the springline with washed sand. The encasement pipe should be centered on the crossing and both ends sealed with cement grout or manufactured seal.

B. Water line/manhole separation. Unless sanitary sewer manholes and the connecting sewer can be made watertight and tested for no leakage, they must be installed so as to provide a minimum of nine feet of horizontal clearance from an existing or proposed waterline. Where the 9-foot separation distance cannot be achieved, a carrier pipe as described in subsection (a) (4) of this section may be used where appropriate.

**Std. 1/31/85**
**Revised 4/8/2014**

# ITEM 3051

# CONCRETE STRUCTURES

## I. GENERAL

A. Scope: This Item governs for construction of all types of structures involving structural concrete.

B. Related Work (if utilized in this project)

1. Item 2220 - Structural Excavation and Backfill

2. Item 3310 – Concrete

3. Item 3200 - Concrete Reinforcement

## II. MATERIALS

A. Products

1. Item 3310 - Concrete, class as shown on Plans and/or Exhibits.

2. Expansion Joint Material: As per ASTM D1752. Furnish test results as to compliance with ASTM D545 if requested.

3. Waterstop: Manufactured from virgin polyvinyl chloride plastic compound conforming to U.S. Corps of Engineers Specification No. CRD-C572-65 and containing no scrap or reclaimed material. Unless otherwise specified or shown, water stops to conform to size and shape of Servicisized/Durajoint as manufactured by W. R. Grace & Company, Cambridge Mass. or equivalent of the type indicated as follows:

a. Expansion Joint: Type 5

b. Construction Joint: Type 3

4. Curing Materials: Unless otherwise designated on Plans and/or Exhibits, use either of the following:

   a. Water Curing: Water to meet requirements for concrete mixing water, and which will not stain or leave unsightly residue.

   b. Membrane Curing Compound: Per ASTM C309.

   c. Cotton Mats for Curing: A filling material cotton “bat” or “bats” (min. 12 oz. per sq. yd.), covered with unsized cloth (min. 6 oz. per sq. yd.), tufted or stitched to maintain stability, free from tears, and in good general condition.

5. Forms and Falsework

   a. Timber

      1) Seasoned timber of good quality, free from loose or unsound knots, knot holes, twists, shakes, decay and other imperfections which would affect its strength or impair finished surface of concrete.

      2) Wedges, when required, to be hardwood.

   b. Metal

      1) See Paragraph III. B.4

      2) Aluminum not permitted.

6. Nonshrinking Grout: Premixed grout which is nonmetallic, noncorrosive, and nonstaining; containing specially selected silica sands, cement, shrinkage compensating agents, plasticizing and water reducing agents.

   a. Conform to requirements of Corps of Engineers CRD-C588. Test Method CRD-C589.

   b. Yield: 0.9 cubic foot to 1.0 cubic foot per 100 pounds.

   c. Mixing water per 100 pounds:

      1) Stiff: 2 gallons.

      2) Plastic: 2¼ gallons.

3) Flowable: 2½ gallons.

d. Minimum 28-day compressive strength of 3,000 psi.

e. Maintain grout temperature during placement between 50 degrees F and 90 degrees F.

7. Polyethelene Film for Permanent Moisture Barrier: Minimum thickness of .006-inch (six mils) and high impact strength rating.

8. Concrete Bonding Agent: Any of the following:

a. "Daraweld-C" as manufactured by W. R. Grace and Company.

b. "Bond Crete-S" as manufactured by Burke Concrete Accessories, Inc.

c. Or equivalent.

9. Paint Type Coating: Synthetic elastomer-polyester base coating containing fiberglass, asbestos, mica, perlite and may be either of the following:

a. "Tex-Cote" concrete gray fine textured "Bridge Coat" (Textured Coating of America, Inc.).

b. "Scotch Shield" coatings (Preston Company).

c. Or equivalent.

## III. EXECUTION

### A. General Requirements

1. Time Sequence of Construction Operations

a. Do not place superstructure members, forms, falsework or erection equipment on substructure before concrete has cured for four days.

b. Erect forms on footings supported by piling or drilled shafts after concrete has cured for 4 days. Such work may begin on spread footings after concrete has aged at least 2 curing days.

c. Support of tie beam and/or cap forms by falsework placed on previously placed tie beams is permissible, provided curing requirements are completed and tie beams are properly supported to eliminate stresses not provided for in design.

d. For bridges and direct traffic culverts, construction traffic and traveling public permitted in accordance with the following:

1) Authorization for light construction traffic not to exceed a three-quarter ton truck may be given after last slab concrete has been in place at least 14 days.

2) Authorization for normal construction traffic and, when necessary, to traveling public may be given after last slab concrete has been in place 30 days.

e. Forms, or screed supports for bridges may be attached to I-beams or girders by welding per American Welding society requirements.

B. Construction

1. Forming

a. General Requirements: Design and construct to carry maximum anticipated loads and provide rigidity to prevent settlement or deformation.

b. Design Loads: Use 150 pounds per cubic foot for concrete and live load of 50 pounds per square foot of horizontal surface of form work with 125 percent of allowable stresses used for design of structures.

c. Falsework

1) Make timber sills and gillages large enough to support superimposed load without settlement.

2) Place falsework which cannot be founded on a satisfactory spread footing, on piling or drilled shafts.

3) Cap each falsework bent transversely by a member of proper size, and fasten caps securely to each pile or column in bent and set at proper elevation allowing for a construction camber.

4) Use wedges, if required, in pairs and arrange so as to ensure uniform bearing.

5) Use of wedges to compensate for incorrectly cut bearing surfaces not permitted.

2. Forms

a. Provide mortar-tight forms sufficient in strength to prevent bulging or sagging.

b. If bulging or sagging occurs remove concrete causing such condition and reset forms.

c. Remove metal alignment appliances from forms to a depth of at least ½-inch from concrete surface without undue chipping or spalling, leaving a smooth opening in the concrete surface.

1) Turning off of rods, bolts or ties not permitted.

2) Cut wire ties back at least ½-inch from face of concrete.

3) Prior to erection treat facing of forms with oil or other bond-breaking coating which will not discolor or otherwise injuriously affect concrete surface.

4) Wet surface of forms to be in contact with concrete immediately before placing concrete.

3. Timber

a. Timber for facing or sheathing surfaced on at least one side and two edges.

b. Use nominal 2-inch lumber minimum thickness for forms for bottoms of beams.

c. Use lumber or nominal 1-inch minimum thickness elsewhere, generally, and back by sufficient number of studs and wales.

d. Plywood form lining made with waterproof adhesive to be ¼-inch minimum thickness, oiled at mill, and reoiled or lacquered on job before using.

e. Use tempered Masonite Concrete Form Board, 3/16-inch minimum thickness, as alternate form lining.

1) Keep moist at least 12 hours before applying to sheathing by moistening screen side of board and stacking boards screen side to screen side.

2) Use smooth, hard face as concrete contact surface of form.

f. Plywood forms to be minimum ¾-inch thickness made with waterproof adhesive backed by adequate studs and wales, with form lining not required.

g. Molding for chamfer strips or other uses.

1) Redwood, cypress, or pine.

2) Use quality which will not split when nailed and will hold true lines.

3) Mill cut, dressed on all faces.

4) Fillet sharp corners and edges with triangular chamfer strips, ¾-inch on sides.

4. Metal

a. Lining not required.

b. Thickness of metal forms as required to maintain true shape without warping or bulging.

c. Countersink bolt and rivet heads on facing sides of metal forms.

d. Straight metal panel forms may be used for all structures with straight walls, and for those structures with curved walls only below ground level.

e. Curved metal panels may be used for all structures with curved walls.

5. Joints

a. Expansion Joints

1) Remove form from formed joints as soon as possible to permit free expansion of concrete.

2) Anchor expansion joint fillers to concrete on side of joint by means of copper wire not lighter than No. 12 B&S gage or copper nails of approved size.

3) Ensure complete separation of concrete sections by joint material.

b. Construction Joints

1) Other than those indicated, joints not permitted without written authorization.

2) Roughen previously placed concrete surface so as to expose aggregate particles.

3) Remove loose materials, and wash and scrub surface clean with stiff brooms.

4) Keep concrete surface moist for 12 hours prior to placing adjacent concrete.

5) For horizontal joints in walls, slosh surface of concrete with coating of mortar approximately ¼-inch thick immediately prior to placing concrete thereon.

6) Use regular concrete mix, less coarse aggregate, for mortar.

7) Apply mortar on previously placed vertical surfaces by brushing, where possible, and work mortar into irregularities of surface.

6. Placing Reinforcement: Item 3200 - Concrete Reinforcement

7. Placing Concrete

a. Seal Slabs

1) Use in all excavations for structures requiring reinforcing steel in base slab, except for retaining wall footings and bridge footings, unless shown in Plans and/or Exhibits.

2) Excavate 2-inches minimum below bottom of structural slab and pour seal slab concrete to structural slab bottom elevation.

3) Provide rough float finish.

4) No direct payment made for seal slab concrete.

b. General Requirements

1) Give advance notice before placing concrete.

2) Place concrete only after forms and reinforcing placement have been checked.

3) Discontinue pile driving and other causes of vibration until concrete has attained an age of at least 18 hours.

4) Mix, place, and finish concrete in daylight hours. If necessary to continue after daylight hours, light entire working area.

5) Do not place concrete when impending weather conditions, such as rain, sleet, or snow, threaten to impair quality of finished work.

6) If rainfall occurs during concrete placement, provide covering to protect work.

c. Handling and Transportation

1) Use method and equipment to maintain rate of placement as required to prevent cold joints.

2) Place concrete by buckets, chutes, buggies, pipes, or troughs, which prevent separation of concrete ingredients.

3) With prior written approval, use belt conveyers or pumps, and test samples at discharge end.

4) Protect concrete transported by conveyers from sun and wind, to prevent loss of slump and workability.

5) Pipes used to pump concrete to be shaded and/or wrapped with wet burlap to prevent loss of slump and workability.

6) Do not transport concrete through aluminum pipes, tubes, or other aluminum equipment.

7) Use of chutes in excess of 35-feet total length prohibited.

d. Depositing: Contractor to provide thermometer to measure temperature of concrete.

1) Equip chutes with baffles for depositing concrete on steep slopes, or make chutes in short lengths that reverse lateral direction of movement.

2) Provide downpipe at end of chute.

3) Use no slope steeper than one vertical to two horizontal.

4) Discharge concrete from chutes and troughs either vertically down inside of forms or into pockets outside of forms from which it may flow through holes left in forms.

5) Keep chutes, troughs, and pipes clean and free from coatings of hardened concrete.

6) Deposit concrete in continuous horizontal layers maximum 12-inches thick.

7) Depositing large quantities at one point and running or working it along forms not permitted.

8) Limit free fall of concrete to 4-feet, except in walls 10-inches or less in thickness, if segregation can be prevented.

9) Use tremies for placing concrete in walls over 10-inches thick.

10) Remove hardened concrete spatter ahead of plastic concrete.

11) Do not jar forms after concrete has taken initial set, or place any strain on projecting reinforcement.

12) Make tremies in sections, or provide in several lengths, so outlet may be adjusted to proper heights during placing operations.

13) Place each layer while preceding layer is still plastic, but do not allow more than one hour to elapse between placement of successive layers.

14) Apply vibrators to concrete immediately after depositing, and move throughout mass, through layer of concrete just placed and several inches into plastic layer below.

15) Consolidate concrete and flush mortar to form surfaces by continuous working with immersion-type vibrators.

16) Do not attach vibrators to forms or reinforcement.

17) Provide one standby vibrator for emergency use.

18) If excessive bleeding causes water to form on surface of concrete in tall forms, use stiffer mix.

19) In walls and deep beams, place concrete to a point approximately 1-foot below finished elevation of bottom of slab or beam to be poured monolithically with wall, and allow to settle; but to avoid a cold joint, resume placement of concrete before initial set occurs.

20) Overfill forms and screed off excess concrete after partial stiffening.

21) Placing Concrete in Cold Weather: Minimum temperature of all concrete at time of placement to be not less than 50E F.

    a) Maintain slab temperatures at 50E F or above for period of 72 hours from time of placement and above 40E F for additional 72 hours.

    b) Maintain temperature of all other structural elements at 40E F or above for period of 72 hours from time of placement.

    c) Maintain temperature of concrete placed on or in the ground above 40E for a period of 72 hours from time of placement.

    d) Protect concrete against freezing during curing period in accordance with Portland Cement Association “Design and Control of Concrete Mixtures.”

e) Protect concrete from temperatures below 40E F until it has cured for a minimum of three days at 70E F or five days at 50E F. Remove and replace, at Contractor's expense, all concrete deemed unsatisfactory by Engineer.

f) Protection may consist of additional covering, insulated forms, artificial heatings, or other means approved by Engineer.

22) Placing Concrete in Hot Weather: When air temperature is above 90E F, use approved retarding agent in all exposed concrete, and in all cased drilled shafts regardless of temperature.

a) Reinforcing steel, steel beam flanges, and other surfaces in contact with concrete, to be cooled to below 90E F by means of water spray or other approved methods.

b) Concrete temperature prior to placement not to exceed 85E F, plus a maximum tolerance of 5E F. Concrete above this maximum will be rejected.

c) Reduce concrete temperature at time of placement to satisfy maximum allowable temperature by one or more of the following:

(1) Addition of cold water with a subsequent addition of cement to maintain proper water-cement ratio. Tanks or trucks used for storing or transporting water to be insulated or painted white. Mechanical refrigeration may be used to reduce water temperatures.

(2) Addition of crushed, shaved, or chipped ice directly into the mixer with a subsequent addition of cement to maintain proper water-cement ratio. Continue mixing until ice is completely melted.

(3) Other approved methods.

23) Placing concrete in water.

a) Only when authorized, use concrete mix with minimum 6.5 sacks cement per cubic yard of concrete.

b) Forms, cofferdams, or caissons to be sufficiently tight to prevent water current passing through space in which concrete is being deposited.

c) Pumping water not permitted during placing, nor until concrete with tremie, closed bottom-dump bucket, or other approved method, to avoid free fall through water.

d) Do not disturb concrete after depositing, and maintain horizontal layers at all times.

e) Use watertight tube 10-inches or less in diameter for tremie and constructed, so that bottom can be sealed and opened after it is in place and fully charged with concrete.

f) Support tremie to allow easy movement horizontally to cover work area and vertically to control concrete flow.

g) Stop flow by lowering tremie.

h) Capacity of bottom-dump buckets not less than one-half cubic yard.

i) Lower bucket or tremie gradually and carefully to rest upon concrete already placed and raise very slowly during upward travel, intent being to maintain still water at point of discharge and to avoid agitating mixture.

j) Pour concrete continuously until work is completed.

24) Placing Concrete on Ground

a) Place concrete in footings after depth and character of foundation is observed.

b) Place footing concrete upon seal slabs after caissons or cofferdams are free from water and seal surface cleaned.

c) Locate pumps or bailing equipment in sump outside of forms.

d) Immediately before placing concrete, moisten subgrade to decrease absorption of moisture, if seal slab or waterproofing not required.

e) With prior authorization, side forms in dry excavation may be omitted.

f) Place column concrete monolithically unless otherwise provided.

8. Curing Concrete

a. Keep forms tight against concrete, or remove and start curing operations.

b. Length of Curing

1) Cure concrete for six consecutive curing days.

2) Cure high-early-strength concrete for three consecutive curing days.

3) Cure bridge slabs and top slabs of direct traffic culverts for 10 consecutive curing days.

c. Definition of Curing Day

1) “Curing day” is any calendar day during which the temperature, taken in the shade away from artificial heat, is above 50E F for at least 19 hours (or colder days if satisfactory provisions are made to maintain the temperature at all surfaces of the concrete above 40E F for the entire 24-hour day).

2) Required curing period begins when all concrete therein has attained initial set.

d. Curing Methods

1) Water Curing: Keep all exposed concrete surfaces wet continuously for required curing time.

a) Place wet cotton mats as soon as possible after surface has hardened sufficiently to prevent damage to concrete.

b) Weight mats down to provide continuous contact with all concrete surfaces.

c) Use overlapping water sprays or sprinklers that keep all unformed surfaces continuously wet.

d) Use minimum 2-inches clean, granular material kept wet at all times or minimum 1-inch depth of water.

e) Provide dam or similar procedure to retain water or saturated sand.

2) Membrane Curing

a) Deliver curing compound in original containers showing name of compound, manufacturer, and batch number.

b) Spray compound, using pressure-tank type spraying equipment, and keep thoroughly mixed during application.

c) Apply in single, uniform coating at rate of coverage recommended by manufacturer, but not less than 1 gallon per 180 square feet of area.

e) Apply to walls immediately after form removal or after first rubbing, as applicable.

f) Apply on slabs immediately after finishing or after excess moisture has disappeared.

g) Keep in place and protect against abrasive action for 10 days to obtain curing equivalent to a 6-day moist curing.

h) Protect against any traffic and apply protective coating no sooner than 24 hours after application of membrane curing compound.

i) Immediately repair any damage to membrane.

j) Do not use on surface to receive first rubbing with No. 16 carborundum stone, surfaces to be painted, or to which waterproofing material or liquid floor hardener is to be applied, and surfaces on which additional concrete is to be placed.

k) Use on surfaces which cannot be cured satisfactorily with mats, when so directed.

9. Removal of Forms and Falsework

a. Remove forms from surface to receive rubbed finish when concrete has attained adequate strength to prevent damage, and remove only as rapidly as rubbing operation progresses.

b. Rewet wood forms or form lining left in place longer than 24 hours as required to keep them moist.

c. Remove forms and falsework from portions of structures that do not require rubbed finish, after the following number of curing days:

1) Forms for falsework under slabs, beams or girders - 7 days.

2) Forms for walls, columns and piers - 2 days.

d. If cold weather continues below 40E F, form and falsework may be removed at the end of a period of calendar days equal to twice the number of curing days specified.

10. Defective Work: Any defective work discovered after form removal to be repaired or replaced immediately at Contractor's expense.

11. Concrete Surface Finish: For concrete having no special finish indicated, remove ties, fill holes, and remove fins and rough edges.

a. Monolithic Finish

1) Finish slabs, platforms, and steps monolithically between joints.

2) Set screeds prior to concrete placement, and make sufficiently rigid to withstand impact of concrete being placed.

3) Tamp concrete thoroughly to force coarse aggregate away from surface of slab, then float to secure hard surface.

4) Provide wood float finish, except use steel-trowel finish for building and pump station floor slabs, and elsewhere as indicated on Plans and/or Exhibits, unless otherwise directed.

5) "Dusting" floor surfaces with dry material not permitted.

6) Round edges at all expansion joints with suitable jointing or edging tools.

b. Linseed Oil Treatment

1) Unless otherwise shown on Plans and/or Exhibits, upper surfaces of bridge roadway slab only to receive a linseed oil treatment.

2) Material to consist of boiled linseed oil and mineral spirits for ambient temperature range above 40E F. Boiled linseed oil and kerosene may be used for ambient temperature range above 70E F. Ship materials combined in a mixture containing a minimum of 50 percent and a maximum of 70 percent boiled linseed oil by volume, and to meet the following:

a) Boiled Linseed Oil per ASTM D260-61 Type 1.

b) Mineral Spirits per ASTM D235-77.

c) Kerosene per Federal Specification VV-K-211d.

3) Broom, air blast, or clean by other approved means the surface, to remove laitance, oil, or grime accumulation, which may retard or prevent absorption of the mixture by concrete. Concrete surface to be dry and ambient temperature to be above 40E F at time of application. Do not apply treatment earlier than 14 days after concrete placement when moist curing is used.

4) Unless otherwise shown on Plans and/or Exhibits, apply material in two stages at the rate of 40 square yards per gallon for the first stage, and approximately 67 square yards per gallon for the second stage, for a total coverage of approximately 25 square yards per gallon. Do not make second application until 24 hours after first application. Make application with herbicide, insecticide, or similar type spray machine equipment with a spray bar. In isolated cases, make application using a hand-operated pressure pump equipped with spray nozzle.

5) Traffic not permitted on treated surfaces for minimum of 24 hours per final application.

12. Exposed Aggregate Panels

a. Forms for raised panels to be sandblasted may be removed on the day following concrete placement (about 18 hours). Continue curing after sandblasting.

b. Immediately after form removal, sandblast to a depth of from d-inch to e-inch.

c. Protect smooth surfaces adjacent to sandblasted panels during sandblasting.

d. Coarse aggregate for raised panels range from Standard No. 4 to 1½-inch gradation.

e. Exposed aggregate sandblasted surfaces are to receive a coat of Prime-A-Pell 200 as manufactured by Chemproke Corp., Garland, Texas, or equivalent. Preparatory work, application, and precautions in strict compliance with manufacturer's recommendations.

13. Rub-Finished Surfaces

a. General: Rub-finish exposed vertical and battered surfaces from 6-inches below ground surface or from 6 inches below normal water level to top, except for small plinths and similar structures which extend less than 12-inches above finished grade.

b. Procedure

1) Start rubbing operations when concrete has attained adequate strength for form removal (about 18 hours after concrete placement). Continue curing afterwards.

2) Do necessary pointing as forms are removed.

3) Remove forms only as rubbing progresses in order to prevent rapid hardening of surface to be rubbed.

4) After pointing has set, wet surface with brush and give first surface rubbing with No. 16 carborundum stone or equal.

5) Rub sufficiently to bring surface to paste and to produce smooth dense surface without irregularities.

6) Add no cement to form surface paste.

7) Spread or brush material, which has been ground to paste, uniformly over surfaces and allow to take reset.

8) Do not rub chamfered corner in first rubbing.

9) Complete first rubbing within 36 hours after completion of concrete placement.

10) For final acceptance, clean surfaces of structure and give final finish rubbing with No. 30 carborundum stone or equal.

11) After rubbing, strip surfaces with brush and allow mortar on surface to take reset; then wash surface with clean water.

12) Leave structure with clean, neat, and uniform appearing finish.

14. Paint Type and Grout Finishes: When specified on Plans and/or Exhibits or by Special Provision, the following alternative procedures to rubbing apply.

a. Adhesive Grout Coating

1) Perform first rub to eliminate rough surfaces, then give surface a coating of latex-base adhesive grout of approximately 18-inch thickness.

2) Apply grout by rubbing with sponge rubber float or similar applicator.

3) Mix to be one part latex-base adhesive, two parts white cement, two parts natural cement, two parts fine masonry sand, and sufficient water to produce desired consistency and color.

b. Paint Type Coating

1) Perform first rub to eliminate rough surfaces before applying paint-type coating as specified in Paragraph II. A.9.

2) Furnish sample of coating selected, for approval, before application to concrete surfaces.

15. Patching and Filling Holes

a. Tie and Bolt Holes

1) Fill holes with cement mortar to which has been added white cement so that patches will not appear darker than adjacent concrete surface.

2) Use mortar as dry as possible and pack into holes.

3) Fill holes, entirely through concrete, with nonshrinking grout from inside structure with a pressure gun or other device that will force mortar through to outside face.

4) Strike off excess mortar flush and finish surface to make filled holes as inconspicuous as possible.

b. Honeycomb and Minor Defects

1) Patch slight honeycomb and minor defects in concrete with cement mortar mixed one part cement to two parts fine aggregate. Match color of adjacent concrete.

2) Repair area by cutting out unsatisfactory material by chipping or other approved methods and replace with new concrete, securely keyed and bonded to old concrete, and finish so as to make joints as inconspicuous as possible. Use stiff mixture and thoroughly tamp into place.

16. Waterstops

a. Secure complete embedment of waterstop into concrete.

b. Make waterstops continuous by heat sealing at splices as recommended by manufacturer. Miter waterstops at directional changes, and butt weld straight splices.

c. Place concrete around splice only after inspection.

17. Grouting

a. Clarifier Slabs

1) Prepare slab to receive grout using bonding agent specified in Paragraph II. A.8. in accordance with manufacturer's recommendation.

2) Use grout mixture of one part Portland cement and three parts sand by weight.

3) Slab receiving bonding agent to have a broom finish and be free of dirt, grease, and other foreign substances before placement of bonding agent.

4) Placing Grout

a) Do not deposit large quantities at one point.

b) Use clarifier mechanism operated by hand only for final screeding.

c) Do not allow grout to build up in front of mechanism greater than three inches.

b. For Setting New Equipment

1) Use nonshrinking grout as specified in Paragraph II. A.6.

2) Blow out bolt holes.

3) Chip concrete to obtain firm bond.

4) Set grout forms true, level, tight, and well braced.

5) Assemble equipment to be grouted before grouting.

6) Clean baseplates and all items to be embedded and set in final position.

7) Shim equipment bases for easy removal of shims.

8) Moisten area to receive grout.

9) Do not mix more grout than can be placed in 20 minutes.

10) Place grout from one end or side only to avoid excessive air entrapment and assure good compaction.

11) Work and rod grout continuously while it is being placed.

12) After grout has attained full strength, remove shims.

13) Replace grout damaged by shim removal with like material.

14) Steel trowel exposed grout, and protect exposed area from drying out rapidly.

15) Do not stress items embedded in grout, and do not operate equipment for 36 hours after grout is placed.

c. Other Grouting

1) For general purposes, use mixture of one part Portland cement and two parts sand by weight.

2) If space to be grouted is one inch or less in thickness and cannot be tamp grouted, use a mixture of one part Portland cement and one part sand by weight.

3) If space to be grouted is large, use original concrete mixture.

4) For grout to be tamped, use stiff mixture produced by prolonged mixing.

5) To obtain stiff grout, mix mortar using amount of water required to thoroughly mix ingredients, then continue mixing without additional water until grout is stiff enough to be compacted by tamping when placed.

6) For grouting blockouts, embedded pipes, and similar items, use nonshrinking grout as per Paragraph II. A.6. of this specification.

18. Cleanup: Clean up area and remove excess material, dismantled forms and falsework, and debris during construction; and clean area completely and thoroughly after completion of the work herein described.

## IV. QUALITY ASSURANCE

A. Submittals: For samples, mix designs, tests and reports per Item 3310 - Concrete.

B. Prior to start of work submit following information when requested:

1. Methods of construction.

2. Plans and/or Exhibits for forms and falsework.

3. Amount and type of equipment.

4. Concrete placing schedule with facilities for handling concrete shrinkage.

5. Tabulation of concrete surfaces indicating types of finish on each surface.

**Std. 2/2/86**
**Revised 10/1/02**

# ITEM 3200

# CONCRETE REINFORCEMENT

## I. GENERAL

A. Scope: This section gives requirements for concrete reinforcement. Coordinate the requirements of this section with all other items dealing with concrete and concrete construction.

B. Reference Standards: The latest editions of reference standards listed below form a part of this specification and are applicable to this project.

1. American Society for Testing and Materials

ASTM A 615, "Deformed and Plain Billet-Steel Bars for Concrete Reinforcement"

ASTM A 185, "Specification for Welded Steel Wire Fabric for Concrete Reinforcement"

ASTM A 306, "Specification for Carbon Steel Bars Subject to Mechanical Property Requirements"

2. American Concrete Institute

ACI 315, "Manual of Standard Practice for Detailing Reinforced Concrete Structures"

ACI 318, "Building Code Requirements for Reinforced Concrete"

3. Concrete Reinforcing Steel Institute

CRSI 163, "Recommended Practice for Placing Reinforcing Bars"

CRSI 165, "Recommended Practice for Placing Bar Supports, Specifications and Nomenclature"

C. Submittals

1. Certificates: Submit the manufacturer's certificates giving the properties of steel proposed for use. List the manufacturers test number and heat number, chemical analysis, yield point, tensile strength and percent elongation. Also identify on the certificates the proposed location of the steel in the work.

2. Bill of Materials: Submit bills of materials to be reviewed with shop drawings.

3. Shop Drawings

   a. Submit shop drawings according to the General Conditions. Show reinforcement fabrication, bar placement, location splices, spacing and bar designation, bar type, length, size, bedding, number of bars, location of bars to accommodate post-tensioning tendons and other pertinent information, including dimension. Information must correspond directly to data listed on the bill of materials.

   b. Provide sufficient detail to permit placement of reinforcement without use of design Plans and/or Exhibits. Reproduction of design Plans and/or Exhibits for use as shop drawings will not be allowed. Begin fabrication of reinforcing steel after shop drawings have been reviewed by the Engineer.

   c. Refer to ACI reference standards for detailing, location, placing, splicing, etc. of reinforcing steel to be shown on shop drawings.

   d. Scheduling: Schedule materials for delivery to the site so that items may be installed immediately upon delivery. Plan the schedule to accommodate other work especially post- tensioning. Place items in the proper sequence so that removal and replacement to accommodate other work is avoided.

   e. Handling and Storage: Store steel reinforcement above the ground on platforms, skids or other supports. Protect reinforcing, as far as practicable, from mechanical injury, surface deterioration and rusting caused by exposure to the weather.

   f. Inspection: Make storage and fabrication facilities of the supplier and fabricator available for inspection by the Engineer prior to and during fabrication.

g. Measurement and Payment: No separate payment. Include cost of work in applicable contract price.

II. MATERIALS

A. Reinforcement

1. Deformed Bars: Use deformed bars conforming to ASTM A 615, grade as specified on Plans and/or Exhibits, for all bars except column spirals and those shown on Plans and/or Exhibits to be smooth bars. Where grade is not specified on Plans and/or Exhibits, use Grade 60.

2. Smooth Bars: Use bars conforming to ASTM A 306, Grade 70, for all smooth bars including column spirals.

3. Marking: Clearly mark all bars with waterproof tags showing the number of bars, size, mark, length and yield strength. Mark steel with the same designation as the number in which it occurs. Key marks to be the concrete placement number as designated in the concrete placement sequence shown on the Plans and/or Exhibits.

4. Welded Wire Fabric: ASTM A 185, electrically-welded wire fabric of cold-drawn wire. Provide gauge and mesh size as shown.

B. Mechanical Bar Splices

1. G-Loc Splices: As manufactured by Gateway building Products, 3233 W. Grand Avenue, Chicago, Illinois, or approved equal.

2. Cadweld Splices: As manufactured by Erico Products, Inc., 2070 East 61st Place, Cleveland, Ohio, or approved equal.

C. Tie Wire: Use 18 gauge annealed steel for tie wire.

D. Accessories: Provide chairs, riser bars, ties and other accessories made of plastic or metal, except as otherwise specified. Where concrete surfaces are exposed to the weather in finished work, provide plastic accessories only. Use of galvanized or plastic tipped metal is not permitted in these locations. Use plastic accessories manufactured by W.H.C. Products, Inc., Houston, Texas, or approved equal.

E. Precast Concrete Bar Supports: Provide bar supports 3-inches wide, 6-inches long, and thick enough to allow the required cover. Embed tie wires in the 3-inch sides.

III. EXECUTION

A. Notification: Notify the Engineer at least 24 hours before concrete placement so that reinforcement may be inspected and errors corrected without delaying the work.

B. Fabrication

1. Cold Form Bent Bars: Fabricate cold-form bent bars to the shapes shown on the Plans and/or Exhibits. Do not straighten or rebend bars without specific approval. On the job, cut bars by shearing or sawing.

2. Splices: Use a minimum number of splices. Lap splices in strict accord with ACI 318 or as shown. Where it is necessary to splice reinforcement other than shown, the Engineer will determine the character of the splice. Do not make splices at points of maximum stress. Stagger splices in adjacent bars.

3. Fabrication Tolerances: Bars used for concrete reinforcement must conform to the following fabrication tolerances:

| Measurement | Tolerance in Inches |
|---|---|
| Sheared length | + - 1 |
| Depth of truss bars to 8-Inch Depth | + 0, - ¼ |
| Depth of truss bars over 8-Inch Depth | + 0, - ½ |
| Stirrups, ties, and spirals | + - ¼ |
| All other bends | + - 1 |

**Std. 3/31/86**
**Revised 8/18/2016**

# ITEM 3310

# CONCRETE

## I. GENERAL

A. Scope: This Item governs for materials used; for storing, measuring, and handling of materials; and for proportioning and mixing of concrete. Use either ready-mixed concrete conforming to ASTM C94 or site mixed concrete. Contractor to assume responsibility for design of concrete mixtures. Furnish statement giving proportions of materials that will be used in each class of concrete that is to be incorporated into project. Furnish commercial laboratory reports showing that proportions and materials selected will produce laboratory mixed concrete of specified quality and having strengths twenty (20) percent greater than strengths specified herein.

B. Related Work (if utilized in this project)

1. Item 3200 - Concrete Reinforcement

## II. MATERIALS

A. Cement: In accordance with ASTM C150 or C175. Conform to applicable ASTM Specifications for weight variations and length of storage. Cement which has become caked or lumped not permitted. Deliver in bags for site- mixed concrete. No Fly Ash Allowed.

B. Water: Clean and free of deleterious amounts of acid, alkali or organic matter. Water which is suitable for drinking or for ordinary household use may be accepted for use without being tested. Other water must be tested and determined to be in accordance with current "Standard Method of Test for Quality of Water to be Used in Concrete."

C. Coarse Aggregate: Consist of gravel or crushed stone.

1. Gravel: Consist of durable particles of gravel, crushed or uncrushed, having a wear of not more than forty (40) percent.

2. Crushed Stone: Consist of durable particles of rock of reasonably uniform quality throughout and having a wear of not more than forty (40) percent.

3. Deleterious Substances: Maximum permissible percentages of deleterious substances not to exceed following percentages by weight.

| | |
|---|---|
| Material removed by decantation, ASTM C117 | 1.0% |
| Shale, slate, or similar materials | 1.0% |
| Clay lumps | .25% |
| Soft fragments | 3.0% |
| Others, including friable, thin, elongated or laminated pieces | 3.0% |

Sum of all deleterious ingredients, exclusive of material removed by decantation, not to exceed five (5) percent by weight. Aggregate to be free from an excess of salt, alkali, vegetable matter, or other objectionable materials either free or as adherent coating.

4. Graduation: Conform to following grading requirements. Screens are construed to have circular openings.

Class A Concrete and Class E Concrete:

| | |
|---|---|
| Retained on 1½" screen ..... | 0 to 5% |
| Retained on ¾" screen ..... | 25 to 60% |
| Retained on ¼" screen ..... | 95 to 100% |

Class B Concrete:

| | |
|---|---|
| Retained on 2½" screen ..... | 0 to 5% |
| Retained on 1¼" screen ..... | 25 to 60% |
| Retained on ¾" screen ..... | 40 to 75% |
| Retained on ¼" screen ..... | 95 to 100% |

Class C Concrete:

| | |
|---|---|
| Retained on 3" screen ..... | 0 to 5% |
| Retained on 1½" screen ..... | 25 to 60% |
| Retained on 1" screen ..... | 40 to 75% |
| Retained on ¼" screen ..... | 95 to 100% |

Class D Concrete:

| | |
|---|---|
| Retained on 1" screen ..... | 0 to 5% |
| Retained on ½" screen ..... | 25 to 75% |
| Retained on ¼" screen ..... | 95 to 100% |

D. Fine Aggregate: Consist of sand or a combination of sand and not more than fifty (50) percent of stone screenings.

1. Sand: Composed of cleaned, hard, durable, uncoated grains.

2. Stone Screenings: Consist of clean, hard durable, uncoated fragments resulting from crushing of stone.

3. Mineral Filler: Mineral filler may be combined with sand or sand and stone screenings specified above if such combination is necessary to meet grading requirement for fine aggregate. Filler consist of stone dust, clean crushed shell, crushed sand or other approved inert material. When subject to calorimetric test for organic impurities (ASTM C40), mixture of mineral filler and fine aggregate to be used in Portland Cement Concrete mixed in proportions proposed for use shall not show a color darker than standard color. Conform to following grading requirements (sieves are construed to have square opening).

Retained on 20 mesh sieve ..... 0%
Retained on 30 mesh sieve ..... 0 to 5%
Retained on 100 mesh sieve .....0 to 30%

E. Concrete Admixtures

1. Air-Entraining: Air-entraining agent required. Conform to ASTM C260. Use between three (3) and five (5) percent for Classes A, B, D, and E concrete. Determine air content by ASTM C138 or C173. No air-entraining agent required for seal slabs.

2. Others: Contractor may, at his option, use Possolith (Type VIII) or Plastiment admixture to reduce water and cement content of Classes A, B, D, and E concrete. If admixture is used, maximum reduction in cement content not to exceed “one- quarter” bag per cubic yard; compressive strength laboratory reports, as required hereinabove, to include admixture. No additional compensation allowed for concrete containing mixture.

F. Storage of Materials

1. Cement: Unless otherwise provided, store cement in well ventilated, weather proof buildings which protect cement from dampness. Support cement clear from floor or ground to prevent absorption of moisture. Engineer may permit storage of cement in open for short periods of time (maximum of forty-eight (48) hours) if raised storage platform and adequate waterproof covering are provided.

2. Aggregate: Handling and storage of concrete aggregate such as to prevent mixing with foreign materials. When contract requires use of two (2) or more sizes of aggregate, store in such manner as to prevent intermixing. Handle materials in stockpiles of all weeds and grass.

Bottom layer of aggregate not to be used without recleaning. Stockpile all fine aggregate for at least twenty-four (24) hours prior to use in order to reduce free moisture content.

G. Measurement of Materials by Weight: Measure materials, except water, used in batches of concrete by weight, as outlined herein. Weigh fine aggregate, course aggregate, and mineral filler separately. Make allowances for water content when moist aggregates are used. Determine quantities of each component material of batch, as set forth, and make no change without approval. Base quantities of material per batch upon using full bags of cement. Batches involving use of fractional bags not permitted.

H. Weighing and Measuring Equipment: Capacity of weighing equipment adequate to permit required weighing of materials without delaying production of mixer. Following general requirements apply to all types of weighing equipment contemplated:

1. Weighing Container: Use weighing container of suitable size, shape, and tight enough to hold materials. Design and construct weighing container and its appurtenances such as to eliminate retentions of varying tare materials on any of its parts. Container capable of being fully and quickly discharged without shaking or jarring scales.

2. Scales: Provide scales, that is, balance or weighing mechanism of beam or springless dial type. Use product of nationally known and established manufacturer for this type of equipment. Scales of simple rugged design with minimum number of adjustments consistent with accuracy required and suited for supporting weighing containers. Maintain a maximum tolerance of one (1) percent of net load being weighted. Design and construct parts of weighing mechanism, such as beam, levers, pivots, connections, etc., of such materials as will be consistent with conditions of use and accuracy required. Mount scales on a firm foundation and keep level. Unless scale is equipped with multiple weight beam which permits weighing of more than one kind of material on same scale without changing settings on weight beams, furnish separate scale units for each kind of material.

I. Water: Provide device for measuring quantity of water which indicates in gallons and fractions thereof. Operating mechanism regulates quantity of water required for any given batch within one percent (1%). Cut-off supply inlet automatically when water is discharged into mixer.

J. Classification and Proportions: Proportion as determined by laboratory design reports, using methods outlined in Texas State Highway Bulletin C-1 for design of mixes by absolute volumes and in accordance with requirements hereinafter set forth. Minimum cement content, maximum allowable water content and maximum slump for various classes of mixes follows:

| Class Type | Minimum Cement Bags Per Cubic Yard | Maximum Water Gallons Per Bags (net) | Maximum Slump Inches |
|---|---|---|---|
| A. Structural | 5.25 | 6.25 | 2½ to 4½ |
| B. Fill | 4.25 | 8.00 | 2½ to 4 |
| C. Pipe Blocking | 3.00 | 10.5 | 3 to 5 |
| D. Seal Slab | 4.00 | ----- | 6 to 8 |
| E. Paving | 5.50 | 6.25 | 1 to 3 |

During progress of work, Contractor will maintain a careful check of the quantity of cement used in each structural unit. Make such adjustments, with approval, in mix design to correct for any variations of more than two (2) percent from theoretical cement content when such variations are attributable to mix design. In calculations for theoretical quantity of cement required, make allowances for embedded reinforcing steel, embedded structural steel and all paneling or chambers more than 3-inches in width.

K. Consistency: In general, consistency of concrete mixtures as follows:

1. Mortar clings to coarse aggregate.

2. Concrete is not sufficiently fluid to segregate when transported to place of deposit.

3. Mortar shows no free water when removed from mixer.

4. Concrete settles into place when deposited in forms. When transported in metal chutes at an angle of thirty (30) degrees with horizontal, concrete slides (not flows) into place.

Any mix failing to meet above outlined consistency requirements, although meeting slump requirements, is unsatisfactory. Change mix, upon approval, to correct such unsatisfactory conditions. In cases when characteristics of aggregate furnished are such that, with maximum allowable amount of water, specified slumps and consistency requirements are not met, Contractor may provide aggregate of an improved grading, or modify mix design to meet the sump and consistency requirements by adding either mineral filler or cement, or both as may be necessary. In

case mineral filler is used, combined total quantity of mineral filler and fine aggregate passing 100 mesh sieve may not exceed twenty (20) percent of weight of fine aggregate. Perform slump test in accordance with methods outlined in ASTM C143.

L. Quality of Concrete

1. General: Concrete made of acceptable materials, of proportions specified, meeting strength requirements, and in complete accordance with requirements of construction methods and details specified will be considered as of satisfactory quality.

2. Test Cylinders: Engineer will cast test cylinders or beams of the number and type desired for testing to maintain a check on compressive and flexural strength of concrete actually being placed. Contractor provides curing facilities for purpose of curing concrete test specimens. Include cost of all materials used in test specimens. Include cost of all materials used in test specimens and cost of providing and maintaining curing facilities in Contract prices bid.

M. Mixing Conditions: Mix concrete in quantities required for immediate use. Do not use any concrete which is not placed within thirty (30) minutes after being discharged from mixer. Retempering of concrete not permitted. In threatening weather, which may result in conditions that will adversely affect quality of concrete to be placed, Engineer may order postponement of concrete placement. Where work has been started and changes in weather conditions required protective measures to be used, furnish adequate shelter to protect concrete against damage from rainfall or damage due to freezing temperatures. In case it is necessary to continue mixing operations during rainfall, provide protective coverings for material stock piles only to extent necessary to control moisture conditions in aggregates so as to maintain adequate control of consistency of concrete mix. Do not mix concrete, without approval when air temperature is at or below 40° F (taken in shade away from artificial heat) and falling. If authorized, concrete may be mixed when air temperature is at 35° F and rising. When permission is given for mixing at temperatures below 40° F, conform to following requirements:

Heat water used for mixing to a temperature of at least 70° F but not over 150° F. Heat aggregate by either steam or by dry heat to temperatures of at least 70° F but not over 150° F. Heating apparatus such as to heat mass of aggregates uniformly and preclude occurrence of hot spots which burn materials. Temperature of mixed concrete not to be less than 60° F at time of placing in forms.

III. EXECUTION

A. Mixing and Mixing Equipment

1. Mix in batch mixer of approved type and size which insures uniform distribution of material throughout mass so that mixture is uniform in color and smooth in appearance. Use mixer of minimum rated size of five (5) cubic foot batch capacity for continuous placement of concrete involving fifteen cubic yards or less. For larger concrete placements, use mixer of at least fourteen cubic feet batch capacity. Use of two or more small mixers, operating simultaneously and continuously may be used in lieu of larger mixer. Size of mixer(s) governed by volume of concrete to be placed in one continuous pour.

2. Mix, after all ingredients are assembled in drum, for minimum time of one and one-half minutes for fourteen cubic foot mixers and smaller, and for minimum time of one minute for twenty-one cubic foot mixers and larger. Drum speed during mixing between fourteen and twenty revolutions per minute. Equip mixer with speed regulator to hold mixer to its normal speed of revolutions.

3. Discharge entire contents of drum before any materials for succeeding batch are placed therein. For first batch of concrete materials placed in mixer provide sufficient extra quantities of cement, sand, and water to coat inside surface of drum without diminishing mortar content of mix. Upon cessation of mixing for any considerable length of time, thoroughly clean and wash mixer out.

4. Equip concrete mixer with automatic timing device which is actuated when skip is raised to its full height and dumped. Arrange device to lock discharge mechanism to prevent emptying of mixer until all materials have been mixed together for minimum time required. Device to ring bell after specified time of mixing.

5. Arrange water tank so that amount of water can be accurately measured. Automatically shut-off inlet supply while tank is discharging.

6. Remove any concrete mixer from site of work which is not adequate or suitable for work or not in satisfactory state of repair. Provide suitable replacement mixer. Improperly mixed concrete not permitted.

B. Transit or Ready Mix Concrete: Proportion and prepare in accordance with requirements set forth hereinbefore. If central-mixed completely mix at central plant and then transport in agitator trucks; mixing time as specified hereinbefore. If transit-mix concrete is used, use truck mixer which is water-tight when closed.

Mix each batch of transit-mix concrete for one hundred (100) revolutions at mixing speed as specified by mixer manufacturer. Perform any additional mixing or agitation at rate specified for agitation.

1. Equip truck mixers with water tanks and measuring devices which permit positive measurement of mixing water.

2. Concrete delivered by truck mixers to be of consistency specified hereinbefore. Place transit or ready-mix concrete within one and one-half (1½) hours after introduction of cement into mixer. Placement of concrete over one and one-half (1½) hours of age not permitted.

C. Hand-Mixed Concrete: Hand mixing permitted only for small placements or in case of an emergency and then only on authorization. Perform mixing in water tight mixing box. Mix fine aggregate and cement thoroughly until mixture is uniform in color, then spread over bottom of mixing box in thin layer. Saturate coarse aggregate with water spread over whole mass of additional water is added. After all ingredients have been added, turn entire mass at least six times or more if necessary, so that mixture is uniform in color and smooth in appearance. Hand mixed batches not to exceed two (2) bag batch in volume.

**Std. 3/17/14**
**Revised 10/23/14**

## ITEM 3312

## CEMENT-STABILIZED SAND BACKFILL

I. GENERAL

Description: Furnish all plant, labor, equipment, supervision, and tools for the furnishing and installation of Cement-Stabilized Sand Backfill as shown on Plans and/or Exhibits or as indicated in other items of the Technical Specifications.

II. MATERIALS

A. Aggregate: Use sand containing deleterious materials not to exceed the following requirements by weight.

| | |
|---|---|
| Material removed by decantation | 5.0% |
| Clay lumps | 0.5% |
| Other deleterious substances such as coal, shale, or coated grains of soft flaky particles | 2.0% |

Gradation Requirements:

| | |
|---|---|
| Retained on ⅜-Inch Sieve | 0% |
| Retained on ¼-Inch Sieve | 0% - 5% |
| Retained on 20-Mesh Sieve | 15% - 50% |
| Retained on 100-Mesh Sieve | 80% - 100% |

Color Test ASTM C40-73 - Color to be Darker than Standard Color.

B. Cement: ASTM C150-77, Type 1.

C. Water: Fresh and Clean.

III. EXECUTION

A. Mixing

Use not less than 2 sacks of cement per cubic yard of mixture or amount specified in proposal. Use amount of water required to provide mix suitable for mechanical hand tamping and mix in approved mixer. Material not in place within one and one-half hours after mixing or that has obtained an initial set will be rejected and removed from the site.

B. Placing: Place in 4-inch layers and compact each layer with approved power-driven hand tampers. Compact to dry density of 102 pounds per cubic foot.

## ITEM 3314

## COMPACTED SAND FILL UNDER STRUCTURES

PART I: GENERAL

1.1 Scope: Furnish, place and compact sand fill under structures within limits as shown on Plans and/or Exhibits.

PART II: MATERIALS

Clean sand or clean bank sand free from clay and clay lumps, shale, loam, organic matter, excessive amounts of salt and other deleterious materials. Sand to have a maximum Plasticity Index of 7 and with not more than 40 percent passing a No. 200 sieve. Water used in compaction to be clean, fresh water.

PART III: EXECUTION

Excavate or strip to depth as indicated on Plans and/or Exhibits or as directed by the Engineer. Compact subgrade to 95 percent of maximum in accordance with ASTM D698, by making several passes of a flat-wheeled or vibratory roller to uniformly density soils and to insure that localized weak and compressible zones are not present. Shape surface to receive sand fill as shown on Plans and/or Exhibits. Place in 8-inch maximum lifts, measured loose, and compacted with pneumatic tires or vibratory roller. In confined areas, compact with mechanical tamps. Soils to be compacted at or near optimum moisture content to a minimum dry density of 95 percent of maximum in accordance with ASTM D698. "Water Flooding" to obtain required compaction is not permitted. After compacting, shape surface area to grade indicated.

END OF SECTION

# SECTION 3604
# NON-SHRINK GROUT

## PART 1 GENERAL

### 1.01 REFERENCES

A. U.S. Army Corps of Engineers (CRD):

1. C621-89 - Specification for Nonshrink Grout.

B. American Society for Testing and Materials (ASTM):

1. C1107 REV A-91 - Standard Specification for Packaged Dry, Hydraulic-Cement Grout (Nonshrink).

### 1.02 SUBMITTALS

A. Product Data:

1. Manufacturer's literature.

B. Submit in accordance with Contract Documents.

## PART 2 PRODUCTS

### 2.01 MATERIALS

A. Manufacturers:

1. Fosrok Preco Patch.
2. Five Star Grout, U.S. Grout Corporation.
3. Sealtight 588 Grout, W. R. Meadows, Inc.
4. Masterflow 713 Grout or Set Nonshrink Grout, Master Builders.
5. Sonogrout, Sonneborn Contech.
6. Sikagrout 212, Sika Corporation.
7. Duragrout, L&M Construction Materials, Inc.
8. Or equal.

B. Grout:

1. Cement base, nonmetallic, nongas forming, nonshrink, preblended and ready-to-use requiring only addition of water at Project site.
2. Comply with ASTM C1107 and CRD C621, Grade B or C.

3. Of moderate fluidity with minimum compressive strength of 5,000 psi at 28 days and shall not bleed.

C. Water:

1. Clean and free from injurious chemicals and deleterious materials.

## PART 3 EXECUTION

### 3.01 PREPARATION

A. Clean grout contact surfaces of oil, grease, scale, and other foreign matter. Chip away unsound concrete leaving surface level but rough.

B. Underside of base plates of machinery, rails, and bolts shall be free of grease, oil, dirt or coatings.

### 3.02 MIXING AND PLACING

A. Mix and place in accordance with manufacturer's written instructions.

B. Provide sealing materials where necessary to retain grout until hardened.

C. Work grout from one side to other. Avoid trapping air under base plates.

D. Remove plastic anchor bolt sleeve tops where used, and fill with grout at same time base plates are grouted.

### 3.03 CURING

A. Cure with curing compound or as recommended by grout manufacturer.

END OF SECTION

**Std. 2/27/91**
**Revised 12/8/05**

# ITEM 5501

# MISCELLANEOUS METAL

## I. GENERAL

### A. Scope

1. This section in general covers furnishing, fabricating and installing all metal items except reinforcing steel and structural shapes (columns, beams, and plates) utilized within a structure specified elsewhere.

2. The specific items to be furnished and installed under this specification include the following:

   a. Steel Pipe for Railings, Pipe Sleeves, Etc.

   b. Ladders and Railings

   c. Grating and Frames

   d. Drains and Drain Pipe

   e. Bolts, Nuts and Washers

   f. Structural Shapes and Plates, only if specifically so designated.

   g. All other metal items not specifically included under other sections of the specifications.

## II. MATERIALS

A. Steel for structural shapes shall conform to ASTM A-36; steel for plates shall conform to ASTM A-283.

B. Cast iron shall conform to ASTM A-48.

C. Cast steel shall conform to ASTM A-27.

D. Steel pipe shall be zinc-coated, welded, and seamless, conforming to ASTM A-53, Type E or S, Grade B, open- hearth or basic-oxygen steel with sulfur content not more than 0.05 percent.

E. Bolts shall conform to ASTM A-307 except that bolts shown on Plans and/or Exhibits to be "high strength" shall conform to ASTM A-325.

F. Washers bearing on timber shall be malleable iron. Washers bearing on metal shall be cut steel.

G. Grating shall be welded or electro-forged steel grating of the type and size indicated on the Plans and/or Exhibits.

H. Galvanizing: Galvanize miscellaneous metals, when so specified, after fabrication. Cast iron and items completely embedded in concrete shall not be galvanized. Galvanize in accordance with the following specifications, except that minimum weight of zinc coating shall be 2 ounces per square foot of area.

| **ITEM** | **ASTM DESIGNATION** |
|---|---|
| Hardware, Bolts, Nuts, etc. | A-153 |
| Steel Shapes, Plates, and Bars | A-123 |
| Steel Sheets | A-525 |
| Steel Pipe, Welded, and Seamless | A-120 |

I. Corrosion-Resisting (Stainless) Steel

1. Plate, Sheet, Strip, Fasteners where no welding is required: ASTM A167-74, Type 316L or 304L.

2. Plate, Sheet, Strip, Fasteners where welding is required: ASTM A167-74, Type 316L or 304L.

J. Copper

1. Sheet, Strip, Plate: ASTM B152-76, No. 110.

2. Rod, Bar, Shapes: ASTM B133-73, No. 110.

K. Aluminum

1. Structural Shapes, Bars, Grating, Stair Treads: ASTM B221-76 and ASTM B308-73, Alloy 6061-T6.

2. Gravel Stops: ASTM B221-76, Alloy 6063-T42.

3. Other Items: Recognized Standards.

L. Electrodes for welding to conform to the following:

1. For Manual Shielded Metal Arc Welding: “Specifications for Mild Steel Covered Arc Welding Electrodes,” AWS A5.1, or “Specifications for Low Alloy Steel Covered Arc Welding Electrodes,” AWS A5.5.

2. For Gas Metal-Arc Welding: “Specifications for Mild Steel Electrodes for Gas Metal Arc Welding,” AWS A5.18, or “Specifications for Mild Steel Electrodes for Flux Cored Arc Welding,” AWS A5.20.

## III. EXECUTION

A. General Requirements: Submit shop drawings containing the following information when such information is needed to determine contract compliance: methods of construction, amount and type of equipment, erection sequence, paint schedule, and supplier prior to ordering the item.

B. Field Erection

1. Methods and Equipment

a. Spot welding to eliminate erection bolts not permitted.

b. Items for installation over roadway or railroad to be securely tied and/or braced. Protect traffic below from falling objects during the installation procedures and until project completion.

2. Storing and Handling Materials

a. Handle material so as to prevent its injury or damage.

b. Store, material on skids above ground and keep clean, properly drained, and protected from elements causing corrosion.

c. Store flexible shapes upright or supported full length to prevent excessive deflection.

3. Falsework to support miscellaneous metals: Properly designed, constructed, and maintained.

4. Straightening Bent Material

   a. Advise Engineer and receive approval of method to be used prior to initiation of process.

   b. Straighten plates, angles, built-up members, and other shapes by methods that will not produce fracture or other injury to material.

   c. Straighten individual pieces prior to assembly.

   d. Straighten distorted built-up members by mechanical means, or by carefully supervised application of a limited amount of localized heat.

      1) Do not apply heat directly on weld metal.

      2) Temperature of heated area not to exceed 1200$^{o}$ F (dull red).

   e. After straightening bend or buckle, inspect surface of metal for evidence of fracture.

5. Field Welding

   a. Equipment, procedures, operations, workmanship, and techniques conforming to AISC and AWS.

   b. Make radiographic inspections of 25 percent of field welds as approved by Engineer.

   c. Radiograph defective weld repairs.

   d. Radiography required because of unacceptable welding to be performed by commercial laboratory at Contractor's expense.

   e. Shop Painting

      1) Conform to requirements of AISC except clean steel by buffing.

      2) Apply paint at minimum rate of one gallon to 450 square feet.

3) Do not paint surfaces to be in contact with concrete or on which plates will be applied infield or within two inches of field welds.

4) Thoroughly clean surfaces of other metals of dirt, grease, oil, and other foreign matter before transporting to job site, and shop paint only if specified on Plans and/or Exhibits, technical specifications, or if requested in writing and approved by the Engineer.

7. Bearing and Anchorage

a. Place castings, bearing plates, or shoes on full and even bearing on concrete.

b. Place casting, bearing plates, or shoes on performed fabric pads as specified.

c. Adjust grade with Portland cement mortar of one part cement and two parts sand.

1) Minimum thickness of mortar bed c-inch.

2) Maximum thickness of mortar bed d-inch.

3) Provide adequate curing.

d. Use approved grout and galvanized steel shims for grade adjustment over d-inch.

e. Use graphite lubricant for sliding movement surfaces.

f. Coat rolling surface of rocker shoes with approved material.

g. Anchor bolt setting

1) Use templates, or with written approval by drilling and grouting with non-shrinking grout, or by formed holes and grouted with non-shrinking grout.

2) Clean holes before grout placement.

8. Misfits

a. Correct minor misfits as directed by the Engineer, by reasonable amount of reaming and cutting.

b. Report any error in shop work to Engineer.

c. Make correction in presence of Engineer at no expense to Owner.

d. Burning bolt holes not permitted.

9. Clean Up: Clean up area and remove excess material, dismantled forms and falsework, and debris during construction, and clean up area completely and thoroughly after completion of the work herein described.

## IV. QUALITY ASSURANCE

### A. Submittals

1. Shop Drawings

a. Required for structural steel, forgings, wrought iron, castings, or bearings.

b. Required for camber and erection diagrams.

c. Shop drawings to reflect use of submerged arc welding, gas metal arc welding, or cored arc welding.

d. Provide fabricating procedure as follows when members with calculated stresses are fabricated by welding or bolting:

1) List of equipment to be used.

2) Sequence of assembly.

3) Sequence and details of connections.

4) Special processes such as planing, facing, etc.

### B. Tests

1. Submit certified copy of mill certificates of compliance with requirements herein specified for structural steel and other metals.

2. Mill test not required for miscellaneous hardware, bolts, nuts, washers, screws, etc.

C. Product Deliver, Handling, and Storage

1. Deliver grating and accessories to jobsite with sufficient protection, bracing, etc. to ensure arrival in acceptable and undamaged condition.

2. Store in original bundles or crates on level support and protect to prevent damage until erected.

**Std. 2/21/89**
**Revised 10/1/02**

# ITEM 15061

# STEEL PIPING AND FITTINGS

## I. GENERAL

A. Scope: This Item applies to all sizes of seamless, butt-weld, and straight-seam mill pipe for water, air, gas service, and certain chemical services. Furnish all plant, labor, materials, equipment, supplies, supervision, and tools and all operations in connection with furnishing and installing, testing, disinfecting, and placing in service steel piping.

B. Dry Chlorine Piping: Conform to Chlorine Institute, Inc. Chlorine Manual, Fourth Edition.

C. Exceptions

1. Plans show system service, diameters, wall thickness, working pressures, type joint connections, flange classification, and protective coating and lining.

2. Requirements are minimum; pipe of greater strength or wall thickness may be furnished subject to prior approval.

3. Lap welded pipe is not acceptable; use butt welded or seamless.

4. Spiral weld not acceptable.

5. Steel ring or flat plate flanges not acceptable.

## II. MATERIALS

A. Pipe Barrels

1. Steel Pipe 6-Inches and Larger

a. Fabricated electrically welded steel water pipe; AWWA C-200-97.

b. Mill-Type steel water pipe; AWWA C-200-97; includes ASTM A-53, Grades A and B.

2. Steel Pipe 4-Inches and Smaller; ASTM A-53, Grades A and B

   a. Water, Oil, Air, or Natural Gas: Seamless or Butt-Weld.

   b. Chlorine Gas: Seamless only, Schedule 80.

3. Diameters

   a. 12-Inches and Smaller: Nominal diameter in accordance with AWWA C-200-97.

   b. 14-Inches and Larger: Actual outside diameter - O.D.

4. Laying Lengths

   a. Mill Pipe: 20-Foot single lengths or 40-foot double lengths unless approved.

   b. Fabricated Pipe: Of proportions to facilitate transportation to job site.

5. Number Of Seams For Fabricated Pipe-16 Inches And Larger

   a. Girth: 20-Foot maximum spacing.

   b. Longitudinal: 16-Inch to 20-inch - one (1); 22-inch to 54-inch - two (2); 56-inch to 72-inch - three (3).

6. Anchor Rings

   4-Inches And Larger: Provide steel plate anchor rings on all pipe passing through concrete walls or anchor blocks where shown or thrust restraint required. Use continuous fillet welds, both sides. Dimensions as follows (in inches):

| Pipe Size | Ring O.D. | Ring Thickness | Size Of Fillet Weld |
|---|---|---|---|
| 4 To 12 | Pipe O.D. Plus 4 | ½ | 3/16 |
| 14 To 18 | Pipe O.D. Plus 4 | ¾ | ¼ |
| 20 To 24 | Pipe O.D. Plus 6 | ¾ | ¼ |
| 26 To 42 | Pipe O.D. Plus 8 | 1 | 5/16 |
| 48 & Larger | Pipe O.D. Plus 10 | 1¼ | d |

B. Fittings

1. 4-Inches and Smaller: 150-Pound bonded fittings conforming to ASTM A-197 (Use galvanized fittings with galvanized pipe).

   Dry Chlorine Gas: 3,000 pounds forged steel, ASTM A-103, Grade II.

2. 16-Inches and Smaller: Welded. AWWA C-208-96.

3. 18-Inches and Larger: Forged seamless steel, long radius, conforming to AWWA C-208-96. Minimum of 15 degrees angular change for mitre turns. Inside dimensions to match adjoining pipe; wall thickness same or greater than adjoining pipe.

C. Joints

1. 4-Inches and Smaller

   a. Screwed, unless noted otherwise.

   b. Where noted on Plans and/or Exhibits:

      1) Flanges: 150-Pound standard, slip-on or welded neck, ASTM A181 Grade I. Use welded neck unless otherwise designated.

      2) Screwed Unions: 150-Pound malleable iron, ground brass seat.

   c. Chlorine Gas: 2-Bolt 1,500-pound ammonia flange unions up to 1 inch; weld-neck 300-pound forged steel - 1¼-inches and larger, tongue and groove or 1/16-inch raised face.

2. 6-Inches and Larger: Hub type, slip-on, (flat faced if connected to cast or ductile iron) blind flanges same thickness as flange of hub-type, unless otherwise designated; dished-head blind flanges for 36-inches and larger when approved.

   Suction Piping: AWWA C-207-94, Class B.

   Discharge Piping: AWWA C-207-94, Class D.

D. Victaulic Joints

1. Victaulic Style 77 for flexible or Style 07 for rigid joints or equal are acceptable as an option to flanged or welded joints.

2. Grooving per ANSI/AWWA C606-97 Table 4 or roll grooving per Table 5.

3. Gasket - Central cavity, pressure responsive molded of synthetic rubber.

E. Flexible Joint Connections

1. Victaulic Style 77 And 77-D: 28-Inches and Smaller: Type B - grooved collared end, or Type C - collared end with double fillet weld.

   30-Inches and Larger: Type D - grooved, collared end with double filled welds.

2. Dresser: Long sleeve unless shown otherwise, Style 38; equivalent by Smith-Blair or Baker. Harness when required for thrust restraint.

F. Bolting And Gaskets

1. Aboveground Flange Bolts And Nuts: ASTM A-307, Grade B. Bolts to extend past nut not more than heights of nut.

2. Belowground Flange Bolts And Nuts: 316 stainless steel per ASTM F-593 and ASTM F-594. Bolts to extend past nut not more than height of nut.

3. Gaskets: 16-Inches and Smaller - 1/16-Inch composition asbestos; ring type for raised face flanges; full-face for connection to iron flanges. 18-Inches and Larger: Composition asbestos or 1/16-inch or 1/8-inch red rubber, factory cut.

4. Dry Chlorine Gas: Bonded asbestos fiber per MIL A17472 B or 2-4 percent antimony lead.

G. Coating and Lining

1. Air Service

   a. 4-inches and Smaller Pipe

      1) Aboveground

         a) Exterior: galvanized.

         b) Interior: galvanized.

      2) Underground

a) Exterior: liquid-epoxy coated, in accordance with AWWA C210-97. During installation wrap with polyethylene in accordance with AWWA C105-99.

b) Interior: liquid-epoxy coated, in accordance with AWWA C210-97.

b. 6-inches and Larger Pipe

1) Aboveground

a) Exterior: liquid-epoxy coated, in accordance with AWWA C210-97. Final coat to be a minimum of 3 mils (DFT) of aliphatic urethane. Coating materials to be compatible by the same manufacturer. Note exterior color requirement to be in accordance with TCEQ regulations. Un-coated pipe utilized on project to be coated per Specification Item 9901.

b) Interior: liquid-epoxy coated, in accordance with AWWA C210-97.

2) Underground

a) Exterior: liquid-epoxy coated, in accordance with AWWA C210-97. During installation wrap with polyethylene in accordance with AWWA C105-99.

b) Interior: liquid-epoxy coated, in accordance with AWWA C210-97.

2. Gas Service

a. 4-inches and Smaller Pipe

1) Aboveground

a) Exterior: liquid-epoxy coated, in accordance with AWWA C210-97. Final coat to be a minimum of 3 mils (DFT) of aliphatic urethane. Coating materials to be compatible by the same manufacturer. Note exterior color requirement to be in accordance with TCEQ regulations. Un-coated pipe utilized on project to be coated per Specification Item 9901.

b) Interior: oil wiped.

2) Underground

a) Exterior: hot applied coal tar enamel with single wrap of Kraft paper per AWWA C203-97 or liquid-epoxy coated, in accordance with AWWA C210-97. During installation wrap with polyethylene in accordance with AWWA C105-99.

b) Interior: liquid-epoxy coated, in accordance with AWWA C210-97.

b. 6-inches and Larger Pipe

1) Aboveground

a) Exterior: liquid-epoxy coated, in accordance with AWWA C210-97. Final coat to be a minimum of 3 mils (DFT) of aliphatic urethane. Un-coated pipe utilized on project to be coated per Specification Item 9901. Note exterior color requirement to be in accordance with TCEQ regulations.

b) Interior: liquid-epoxy coated, in accordance with AWWA C210-97.

2) Underground

a) Exterior: hot applied coal tar enamel with single wrap of Kraft paper per AWWA C203-97 or liquid-epoxy coated, in accordance with AWWA C210-97. During installation wrap with polyethylene in accordance with AWWA C105-99.

b) Interior: oil wiped.

3. Water or Wastewater Service

a. 4-inches and Smaller Pipe

1) Aboveground

a) Exterior: galvanized.

b) Interior: galvanized, if potable water in accordance with the NSF 61 requirements.

2) Underground

a) Exterior: hot applied coal tar enamel with single wrap of Kraft paper per AWWA C203-97 or liquid-epoxy coated, in accordance with AWWA C210-97. During installation wrap with polyethylene in accordance with AWWA C105-99.

b) Interior: liquid-epoxy coated, in accordance with AWWA C210-97.

b. 6-inches and Larger Pipe

1) Aboveground

a) Exterior: liquid-epoxy coated, in accordance with AWWA C210-97. Final coat to be a minimum of 3 mils (DFT) of aliphatic urethane. Un-coated pipe utilized on project to be coated per Specification Item 9901. Note exterior color requirement to be in accordance with TCEQ regulations.

b) Interior: liquid-epoxy coated, in accordance with AWWA C210-97.

2) Underground

a) Exterior: hot applied coal tar enamel with single wrap of Kraft paper per AWWA C203-97 or liquid-epoxy coated, in accordance with AWWA C210-97. During installation wrap with polyethylene in accordance with AWWA C105-99.

b) Interior: liquid-epoxy coated, in accordance with AWWA C210-97.

III. EXECUTION

A. Fabrication

1. All fabrication to be performed in fully equipped pipe fabrication shop which complies with the Steel Plate Fabricators Association (SPFA) and are members of the American Iron and Steel Institute (AISI). When field fabrication is permitted, same to be performed under controlled conditions.

2. Follow AWWA Standard Specification C-206-97 for qualifications, procedures, and tests.

3. No field welds except as shown on the Plans and as designated on Plans.

4. Galvanized 6-inches and larger (flanged) piping to be fitted and fabricated, then galvanized. Where field welds are permitted on galvanized piping, clean and coat welded area with GALVITE manufactured by ZRC Worldwide of Marshfield, Massachusetts (www.zrcworldwide.com).

5. Machine position work for manual operations wherever possible.

6. Use precision levels and steel scales to square and align flanges on pipe and fittings. Check bolt hole locations before fitting and tack welding.

B. Installation; Aboveground

1. General Requirements

a. Plans show sizes, elevations, and arrangement of piping.

b. Where connections to pumps are mentioned, specifications apply likewise to any item of equipment to which piping strains might be transferred.

c. When required, place ½-inch mesh wire cloth screens (¼-inch for 4-inches and smaller) at suitable point adjacent to pump in suction lines to trap debris. Remove same and clean out adjacent pipe after system has operated sufficient time to clear itself of debris.

d. For pipe having coal-tar enamel coating and wrapping, bring coating 6-inches above finished grade and seal or seal against penetrated structure with hot enamel. Use similar approved treatment for other coatings.

2. Handling

a. Take all necessary precautions to prevent damage to pipe and coating. Use only approved hoists, slings, or other means to avoid damage.

b. Protect flange surfaces. Replace or repair any pieces having gouged or dented flanges.

c. Keep interiors free of all foreign matter.

3. Supports and Hangers

a. Use only commercial metallic hangers and supports (Elcen, Grinnel, or equal) or as shown on Plans and/or Exhibits.

b. Support piping as required to distribute the loads on structure, supports, and piping, such that excess stresses do not obtain.

c. Where concrete supports are shown, apply primer and finish coats of paint and place 15-pound building felt under pipe in way of concrete. Trim felt neatly.

d. Pitch piping to drain.

e. Grout ferrous support base flange or floor plate minimum ½-inch above finished concrete.

f. Do not clamp piping to building surfaces; use off-set supports.

4. Fittings and Installation, 4-Inches and Smaller

a. Cut and fit pipe accurately to measurements established at site. Run lines parallel to building lines.

b. Do Not spring or force pipe into place; weaken structural portions of building; caulk threaded joints to stop leaks; bury pipe in floor unless authorized; bush fittings.

c. Cut full threads after roaming and burring end of cut pipe. Make joint with approved graphite threaded joint compound or synthetic tape manufactured for that purpose, applied to male threads only. Leave no more than two threads showing when making up joints.

d. Provide unions, whether or not shown, to permit make up and removal of valves and all sections of the system without cutting pipe.

5. Installation - 6-Inches and Larger

a. Start with piping at “cast-in” wall fittings and work toward pumps. If “block-outs” are shown on Plans, grout same after pumps are grouted and grout set.

b. Clean each piece to remove dirt, rust, grease, and other foreign matter. Wire-brush flange faces.

c. Bring individual runs of piping to true grade and alignment by means of erection bolts and drift pins without forcing.

d. Align and make up discharge piping before grouting pumps to assure accurate alignment, then disconnect same during grouting.

e. After pumps are grouted and grout set, make up suction piping, making use of "flexible joints" provided for that purpose, or as otherwise shown. Correct alignment as necessary to prevent stresses in flexible joints. Refer to flexible coupling manufacturer's instructions for permissible limits of alignment.

f. In making up bolted connections

1) Wire-brush flange and clean inside of pipe before placing gasket.

2) Place bolts with heads all in same direction.

3) Tighten flange bolts, each in turn, at uniform rate around joint until all are tight.

C. Installation; Underground

1. Alignment and Grade

a. To Grade: As shown with joints centered.

b. Not to Grade: Minimum depth of cover 36-inches under finished grade; 18-inches under flow lines of drainage ditches; greater depth of cover at other locations as shown.

2. Excavation and Preparation of Trench

a. Bracing and Drainage: Brace trench and drain as necessary to accomplish work safely and efficiently; use dewatering system if necessary to keep trench clear of water. Deliver discharge from pumps to natural drainage ditches or to drains.

b. Width: Minimum of 6-inches and maximum of 9-inches outside pipe barrel. Maintain side of trench substantially vertical.

c. Earth Foundation: Lay pipe on sound earthen foundation; cut true and even so barrel of pipe will have full bearing width.

3. Pipe Handling and Laying

a. Care: Load and unload by use of approved hoist, skids, or other approved means to avoid damage. Keep interior of pipe free of foreign matter.

b. Inspection: Before lowering pipe into trench, inspect pipe for defects. Perform visual inspection on pipe coating.

c. Laying: Lay pipe flat; do not block under pipe; do not lay pipe in water; lay pipe only during approved weather conditions; use temporary plugs as necessary and otherwise keep interior of pipe clean.

d. Valve Boxes and Valves: Set valves and boxes plumb and centered. Provide firm support by tamping selected materials as directed. Set top of boxes at finished grade unless directed otherwise.

e. Deflection of Joints: Obtain approval before deflection pipe from straight line. For deflections of pipe, use sections of pipe with beveled ends for deflection not greater than five degrees. For deflections greater than five degrees, use fabricated or fittings as specified.

f. Thrust Blocking: The responsibility of thrust blocking shall be the Contractor's. Thrust blocking shall be provided at all fittings, points where reducers or changes in pipe diameter occurs, fire hydrants, or flushing valves, and all plugged openings. The concrete shall bear on undisturbed firm soil. If unavailable at a particular installation, the absence shall be promptly brought to the Engineer's attention. Place concrete so that joints are left accessible.

g. Bedding: Where required to stabilize trench, lay pipe on approved compacted bedding. Use only approved bedding. Excavate trench 6-inches below pipe. Replace excavation below subgrade with compacted bedding under barrel of pipe and sufficient additional thickness of bedding for full width of trench on each side of pipe to fit lower pare of pipe exterior for at least 50 percent of pipe breadth. Complete backfill as hereinafter specified.

h. Sand Encasement: Provide sand encasement on all lines unless deleted on Plans. Provide bank 6-inches below and 12-inches above pipe. Sand to be free of cinders, organic matter, and foreign material.

i. Timber Left In Trench: When so ordered, leave sheeting and bracing in trench. Cut timber minimum of 18-inches below surface of ground. Nail all whaler and cross braces sufficiently to prevent displacement during backfill operations.

4. Backfilling and Cleanup

a. Time Of Backfilling: Backfill as soon as practicable after completion of laying and jointing of pipe.

b. Backfill Procedure Above Pipe Zone: Compact thoroughly, succeeding layers which may contain coarser materials, by puddling with hose and long pipe nozzle, by flooding trench, or by tamping if material does not puddle readily. Exercise proper precautions to prevent floating of pipe when flooding trench; any damages resulting to be Contractor's responsibility.

c. Procedure Where Settlement Is Important: Where backfill must be made safe for vehicular traffic, place backfill above pipe zone in thin (approximate 4-inch) layers. Compact to density equal to undisturbed material in trench sides.

d. Procedure Under Structures: Bring bearing surface to required grade by placing thoroughly compacted, approved moist material in thin (about 4-inch) layers. Compact to density equal to undisturbed material in trench sides.

e. Removal of Excess Material: Remove from site, or use at site for fill as shown or approved.

f. Restoration: Replace walks, drives, shrubbery, trees, fences, sod, and any like obstructions removed or disturbed, where such are to be retained as a part or feature of a completed project.

D. Testing

1. General: Test all piping as provided herein. Provide all equipment, gauges, et cetera, necessary to the tests. Tests to be witnessed. Include all joints made up in field. Any leaks at flange threads to be corrected and retested in shop.

2. Pump Discharge Piping

   a. Test with hydrostatic pressure at 200 percent of maximum operating head of pumps, or to a minimum of 100 psi. Hold for sufficient time to permit inspection of all joints; do not release pressure until test is approved.

   b. Examine open end discharge lines visually for leaks during initial operation of pumps.

3. Pump Suction Piping

   a. Piping operating with negative pressure (suction lift conditions) to have hydrostatic test of 35 psi.

   b. Piping operating with positive pressure to have hydrostatic test of not less than 35 psi, but at least 200 percent of suction head.

4. Gas and Air Systems: Pneumatic test to 150 percent of system working pressure, not less than 50 psi. Test pressure shall hold with no pressure drop. Determine location of leaks with soap suds.

5. Dry Chlorine Gas: Clean and dry complete piping system; pressure test to 150 psig with dry air or nitrogen; check joints with soapy water; introduce chlorine gas gradually and test for leaks with aqua ammonia; purge piping with dry air prior to welding after checking with chlorine.

6. Open End Piping: Examine lines visually for leaks during initial operation of system.

7. Tank and Miscellaneous Connections: Perform hydrostatic test on all other piping as directed. Test pressure to be set at 200 percent of system operating pressure, but not in excess of mill test pressure rating of valve and fitting components.

E. Disinfection (Water Systems Only)

1. Description: Disinfection of all new piping and pumps, including connections to existing sections of work or work provided by others. Disinfection shall be performed in accordance with AWWA C-651 as supplemented and/or modified below.

2. The Contractor shall provide taps within a few feet of the ends of the disinfection section and bleed so as to insure high strength solution to all parts of the section.

3. Unless otherwise approved, hypochlorite shall be used to supply the available chlorine.

4. Continuous feed methods to be used. The Owner will furnish the water one time only at no cost. The Contractor shall provide the chlorine solution tank and means of approximately proportioning its flow. Piping from hydrants of the dilutant water and all other piping and appurtenances to be furnished by the Contractor. Contractor to perform the disinfection and subsequent flushing.

   All retest costs, where additional water for biological testing is required, will be borne by Contractor. Owner will, at Contractor's option, allow reimbursement or deduct from final estimate these costs.

5. The strong chlorine solution must be flushed from the test section. The Contractor shall provide means to discharge into an open drainage ditch or into a mixing box discharging to storm sewer. The flushed chlorine solution must not be a potential cause for environmental damage. Contractor must neutralize thoroughly any remaining chlorine residual within the water. Where applicable, Federal, State, and Local Regulatory Agencies must be contacted to determine special requirements for disposal of heavily chlorinated water.

6. The Owner will cause bacteriological samples to be taken and tested. If negative for coliform organisms, the Contractor may proceed with the next step of the work; otherwise the disinfection procedure is to be repeated with all costs borne by Contractor.

## IV. QUALITY ASSURANCE

### A. Submittals

1. Complete detail layout Plans showing fitting and pipe location, vertical and horizontal. Layout Plans to be minimum ¼-inch equals one foot.

2. Furnish sworn statement that inspection and all tests have been made and meet the requirements of AWWA C151-96.

3. Furnish certified test reports for flanged pipe in quadruplicate.

**Std. 2/21/89**
**Revised 06/4/08**

# ITEM 15062

# DUCTILE IRON PIPE AND FITTINGS

## I. GENERAL

A. Scope: Includes piping 3-inches and larger for buried and exposed systems within the limits of lift stations, booster stations, and treatment facilities.

B. Related Work

1. Plans show pipe class, thickness class, type joints, and service pressure for flanged joints. Other Items in this Specification cover jointing, installation, testing, and sterilization.

2. Soil pipe and fittings not under this Item.

## II. MATERIALS

A. Pipe Barrels

1. Ductile Iron: Per AWWA C115, AWWA C150, AWWA C151 and AWWA C606.

2. Certification: Pipe must bear mark of Underwriters Laboratories.

3. Thickness Class

a. Pressure Pipe - minimum thickness to be Class 50 or as shown on Plans.

b. Non-pressure Pipe - minimum thickness to be Class 52 or as shown on Plans.

4. Provide pipe sections in standard lengths, not less than 18-feet long, except for special fittings and closure sections.

B. Fittings, Flanges and Joint Material

1. Fittings

a. Use fittings of same size as pipe. Reducers are not permitted to facilitate an off-size fittings. Reducing bushings are also prohibited. Reduction in pipe size will be made by reducing fittings.

b. Below ground fittings to be push-on or mechanical joint per AWWA C110, or as shown on Plans, with gasketed joint per AWWA C111, fittings to be pressure rated at 250 psig. Provide restraint joints as shown on Plans.

c. Above ground fittings to be flanged per AWWA C115 or victaulic style per ASTM A-536, fittings to be pressure rated at 250 psig.

2. Flanges

a. Flanges to be per AWWA C115, screwed on threaded ends.

b. Shop threaded, machine tightened, and faced in machine shop for this type of work, and conforming to the requirements of AWWA C115.

c. Shop test, hydrostatically, each flanged pipe piece at 75 psig for pump suction pipe and at 150 psig for pump discharge piping.

3. Victaulic Style

a. Rubber Gaskets for Water and Sewage Service Per AWWA C111 and Appendix A C115.

b. Rubber Gaskets for Diffused Air Systems (10 psi and 190 degrees F Service): Use MIL-R-83248 fluoroelastomer such as Dupont's Viton or 3M's Fluorel.

4. Joint Material

a. Rubber Gaskets for Water and Sewage Service Per AWWA C111 and Appendix A C115.

b. Rubber Gaskets for Diffused Air Systems (10 psi and 190 degree F Service): Use MIL-R- 83248 fluoroelastomer such as Dupont's Viton or 3M's Fluorel.

c. For compressed air service (30psi and greater) use 1/16-inch full-face asbestos gaskets, factory cut.

d. Lead Joints: Use tarred or braided packing and 99.73 percent pure lead conforming to AWWA C600. This type joint not to be utilized unless approved by Engineer for use with existing piping system connection.

e. Gasket: Gaskets shall be molded of synthetic rubber specially compounded to conform to ductile pipe surfaces in a central cavity, pressure-responsive configuration, conforming to the pipe outside diameter and coupling housing, of elastomers having properties as designated in ASTM D-2000. Reference shall always be made to the latest published Selection Guide for Victaulic Gaskets for proper gasket selection for the intended service. Gasket supplied for water and wastewater service from -20° F to +180° F on ductile iron pipe, from 4"-24" shall be a Grade "M" halogenated butyl, with brown color code, specially compounded to conform to ductile pipe surfaces.

5. Flange Bolts, Nuts and Washers: ASTM A307, Grade B, ANSI B18.2 bolts to extend past nut not more than height of nut. Use studs with nuts on each end for pipe sizes 54-inch and larger.

a. Aboveground: Black Steel

b. Underground: 316 SS for flange and Cor-Ten for mechanical joint connections

C. Coating and Lining

1. Aboveground

a. Exterior: Per Specification Item 9901 - Painting and Coating, Table 1, System Schedule, "Piping and Valves."

b. Interior

1) Air Service: Bituminous coated, not less than (1) mil thick

2) Water Service: Liquid epoxy coated in accordance with ANSI/AWWA C116/A 21.16

3) Sewage Service: Liquid epoxy coated in accordance with ANSI/AWWA C116/A 21.16

2. Underground

a. Exterior: Epoxy coated per ANSI/AWWA C116/A 21.16. Apply 8 mil polyethylene encasement in accordance with AWWA C105 to all cast iron and ductile iron piping, including fittings and valves.

b. Interior

1) Air Service: Bituminous coated, not less than (1) mil thick.

2) Water Service: Liquid epoxy coated in accordance with ANSI/AWWA C116/A 21.16

3) Sewage Service: Liquid epoxy coated in accordance with ANSI/AWWA C116/A 21.16

D. Flexible Joint Connections

1. Dresser: Long Sleeve unless shown otherwise, style 38; equivalent by Smith-Blair or Baker. Harness when required for thrust restraint.

2. Other: Special or other type as shown on Plans.

## III. EXECUTION

A. General

1. General Requirements

a. Plans show sizes, elevations, and arrangement of piping.

b. Where connections to pumps are mentioned, specifications apply likewise to any item of equipment to which piping strains might be transferred.

c. When required, place ½-inch mesh wire cloth screens (¼-inch for 4-inch and smaller) at suitable point adjacent to pump in suction lines to trap debris. Remove same and clean out adjacent pipe after system has operated sufficient time to clear itself of debris.

d. For pipe having coal-tar enamel coating and wrapping, bring coating 6-inches above finished grade and seal or seal against penetrated structure with hot enamel. Use similar approved treatment for other coatings.

2. Handling

a. Take all necessary precautions to prevent damage to pipe and coating. Use only approved hoists, slings, or other means to avoid damage.

b. Protect flange surfaces. Replace or repair any pieces having gouged or dented flanges.

c. Keep interiors free of all foreign matter.

B. Installation; Underground

1. Alignment and Grade

a. To Grade: As shown on Plans with joints centered and spigots home.

b. Not to Grade: Minimum depth of cover 36-inches under finished grade; 18-inches under flow lines of drainage ditches; greater depth of cover at other locations as shown.

2. Excavation and Preparation of Trench

a. Bracing and Drainage: Brace trench and drain as necessary to accomplish work safely and efficiently; use dewatering system if necessary to keep trench clear of water. Deliver discharge from pumps to natural drainage ditches or to drains.

b. Width: Minimum of 6-inches and maximum of 9-inches outside pipe barrel. Maintain side of trench substantially vertical.

c. Earth Foundation: Lay pipe on sound earthen foundation; cut true and even so barrel of pipe will have full bearing width.

d. Correcting Faulty Grade: Correct any part of trench excavated below grade with approved, thoroughly compacted material.

e. Bell Holes: Provide bell holes of ample dimensions to permit proper jointing.

3. Pipe Handling and Laying

a. Care: Load and unload by use of approved hoist, skids, or other approved means to avoid damage. Keep interior of pipe free of foreign matter.

b. Inspection**:** Before lowering cast iron pipe into trench, inspect pipe for defects by tapping with light hammer to detect cracks. Perform visual inspection on pipe of other materials. Replace defective joints, fittings, pipe, or coatings.

c. Apply 8 mil polyethylene encasement in accordance with AWWA C105-99 to all cast iron and ductile iron piping, including fittings and valves in buried service.

d. Laying: Lay bell and spigot pipe with bell ends facing direction of laying. Do not block under pipe. Do not lay pipe in water. Lay pipe only during approved weather conditions. Use temporary plugs as necessary and otherwise keep interior of pipe clean.

e. Valve Boxes and Valves: Set valves and boxes plumb and centered. Provide firm support by top of boxes at finished grade unless directed otherwise.

f. Deflection of Joints: Obtain approval before deflecting pipe from straight line. Follow manufacturer's recommendation for deflection at joints.

g. Thrust Blocking: The responsibility of thrust blocking shall be the Contractors. Thrust blocking shall be provided at all fittings, points where reducers or changes in pipe diameter occurs, fire hydrants, or flushing valves, and all plugged openings. The concrete shall bear on undisturbed firm installation, the absence shall be promptly brought to the Engineer's attention. Place concrete so that joints are left accessible.

h. Bedding: Where required to stabilize trench, lay pipe on approved compacted bedding. Use only approved bedding. Excavate trench 6-inches below pipe. Replace excavation below subgrade with compacted bedding under barrel of pipe and sufficient additional thickness of bedding for full width of trench on each side of pipe to fit lower part of pipe exterior for at least 50 percent of pipe breadth. Complete backfill as hereinafter specified.

i. Sand Encasement: Provide sand encasement on all lines unless deleted on Plans. Provide bank 6-inches below and 12-inches above pipe. Sand to be free of cinders, organic matter, and foreign material.

j. Timber Left in Trench: When so ordered, leave sheeting and bracing in trench. Cut timber minimum of 18-inches below surface of ground.

Nail all whaler and cross braces sufficiently to prevent displacement during backfill operations.

4. Backfilling and Cleanup

   a. Time of Backfilling: Backfill as soon as practicable after completion of laying and jointing of pipe.

   b. Backfill Procedure Above Pipe Zone: Compact thoroughly, succeeding layers which may contain coarser materials, by puddling with hose and long pipe nozzle, by flooding trench, or by tamping if material does not puddle readily. Exercise proper precautions to prevent floating of pipe when flooding trench; any damages resulting to be Contractor's responsibility.

   c. Procedure Where Settlement is Important: Where backfill must be made safe for vehicular traffic, place backfill above pipe zone in thin (approximately 4-inch) layers. Compact to density equal to undisturbed material in trench sides.

   d. Procedure Under Structures: Bring bearing surface to required grade by placing thoroughly compacted, approved moist material in thin (about 4-inch layers). Compact to density equal to undisturbed material in trench sides.

   e. Removal of Excess Material: Remove from site, or use at site for fill as shown or approved.

   f. Restoration: Replace walks, drives, shrubbery, trees, fences, sod, and any like obstructions remove or disturbed, where such are to be retained as a part or feature of a completed project.

5. Joints

   a. Bell and Spigot Boltless Gasketed Joints

      1) Preparation of Pipe Ends: Remove from bell and spigot ends all lumps, blisters, excess coal-tar coating, oil and grease, then wire brush and wipe clean and dry before laying pipe.

      2) Installation of Ring Gasket: Wipe gasket seat in socket with clean dry cloth. Place gasket with large end entering first. Spring gasket into seat in bell so that groove fits over head in seat. Apply thin film of lubricant to inside surface of gasket.

3) Setting Spigot: Align spigot with bell and start into bell so that it contacts gasket. Apply lubricant to engaging surface of spigot if necessary. Pipe six inches and smaller may be driven with a bar lever on end of pipe. For larger pipe, use only approved ratchet- type jacking tool to pull pipe "home."

b. Mechanical

1) Wash socket and plain end with soapy water, then slip gland and gasket over plain end. Face small side of gasket and lip of gland to bell.

2) Paint gasket with soapy water.

3) Push gasket into position, being sure it is evenly seated in socket.

4) Slide gland into position, insert bolts, and run nuts up finger tight.

5) Tighten bolts to uniform tightness with ratchet wrench. First tighten bottom bolt, then top, and on around in sequence of 180 degrees apart.

c. Flanged

1) Threading and Tightening Flanges: See paragraph II.B.2.

2) Setting Gasket: If non-graphited gaskets are used, apply graphite and water solution to gasket before placing on flange. Wire-brush flange and clean inside of pipe before placing gasket.

3) Tightening Bolts: After initial alignment, place flange bolts with all heads in same direction. Tighten flange bolts, each in turn, at uniform rate around joint until all are tight.

d. Victaulic: Couplings, fittings, and pipe shall be assembled in accordance with latest published instructions from Victaulic Company of America for the particular product installed.

1) Pipe: The outside surface of pipe between the groove and pipe end must be smooth and free from deep pits or swells to provide a leak tight seal for the Victaulic gasket. All

rust, loose scale, oil, grease and dirt shall be removed. Peened surfaces may require corrective action in order to provide a leak tight gasket seal.

2) Gaskets: All gaskets shall be of the central cavity pressure-responsive design. Gasket Style and elastomeric material (Grade) shall be checked to be certain gasket supplied is suited for the intended service-refer to latest Victaulic Gasket Selection Guide.

3) Lubrication: Lubrication shall always be used for proper coupling/fitting assembly as follows:

a) Thorough lubrication of the gasket exterior including the lips and/or pipe ends and housing interiors, is essential to prevent pinching the gasket. Lubrication assists proper gasket seating and alignment during installation.

b) Use Victaulic Lubricant for installation. Other compatible materials such as silicone or others may be used, however, petroleum based lubricants must not be used on Grade "M" gaskets.

C. Aboveground

1. Flanged: See Paragraph III.B.3.

2. Supports and Hangers

a. Use only commercial metallic hangers and supports (Elcen, Grinnel, or equal) or as shown on Plans and/or Exhibits.

b. Support piping as required to distribute the loads on structure, supports, and piping, such that excess stresses do not obtain.

c. Where concrete supports are shown, apply primer and finish coats of paint and place 15-pound building felt under pipe in way of concrete. Trim felt neatly.

d. Pitch piping to drain.

e. Grout ferrous support base flange or floor plate minimum ½-inch above finished concrete.

f. Do not clamp piping to building surfaces; use off-set supports.

3. Fitting and Installation (4-Inches and Smaller)

a. Cut and fit pipe accurately to measurements established at site. Run lines parallel to building lines.

b. **Do Not** spring or force pipe into place; weaken structural portions of building; caulk threaded joints to stop leaks; bury pipe in floor unless authorized; bush fittings.

c. Cut full threads after reaming and burring end of cut pipe. Make joint with approved graphite threaded joint compound or synthetic tape manufactured for that purpose, applied to male threads only. Leave no more than two threads showing when making up joints.

d. Provide unions, whether or not shown, to permit make up and removal of valves and all sections of the system without cutting pipe.

4. Fitting and Installation (6-Inches and Larger)

a. Start with piping at "cast-in" wall fittings and work toward pumps. If "block-outs" are shown on Plans, grout same after pumps are grouted and grout set.

b. Clean each piece to remove dirt, rust, grease, and other foreign matter. Wire-brush flange faces.

c. Bring individual runs of piping to true grade and alignment by means of erection bolts and drift pins without forcing.

d. Align and make up discharge piping before grouting pumps to assure accurate alignment, then disconnect same during grouting.

e. After pumps are grouted and grout set, make up suction piping, making use of "flexible joints" provided for that purpose, or as otherwise shown. Correct alignment as necessary to prevent stresses in flexible joints. Refer to flexible coupling manufacturer's instructions for permissible limits of alignment.

f. In making up bolted connections:

1) Wire-brush flange and clean inside of pipe before placing gasket.

2) If nongraphited gaskets are used, apply graphite and water solution before placing on flange.

3) Place bolts with heads all in same direction.

4) Tighten flange bolts, each in turn, at uniform rate around joint until all are tight.

D. Testing

1. General: Test all piping as provided herein. Provide all equipment, gauges, etc. necessary to the tests. Tests to be witnessed. Include all joints made up in field. Any leaks at flange threads to be corrected and retested in shop.

2. Pump Discharge Piping

a. Test with hydrostatic pressure at 200 percent of maximum operating head of pumps, or to a minimum of 100 psi. Hold for sufficient time to permit inspection of all joints; do not release pressure until test is approved.

b. Piping operating with positive pressure to have hydrostatic test of not less than 35 psi, but at least 200 percent of suction head.

c. Gas and Air Systems: Pneumatic test to 150 percent of system working pressure, not less than 50 psi. Test pressure shall hold with no pressure drop. Determine location of leaks with soap suds.

d. Open End Piping: Examine lines visually for leaks during initial operation of system.

e. Tank and Miscellaneous Connections: Perform hydrostatic test on all other piping as directed. Test pressure to be set at 200 percent of system operating pressure, but not in excess of mill test pressure rating of valve and fitting components.

E. Disinfection (Water Systems Only)

1. Description: Disinfection of all new piping and pumps, including connections to existing sections of work or work provided by others. Disinfection shall be performed in accordance with AWWA C-651 as supplemented and/or modified below.

2. The Contractor shall provide taps within a few feet of the ends of the disinfection section and bleed so as to insure high strength solution to all parts of the section.

3. Unless otherwise approved, hypochlorite shall be used to supply the available chlorine.

4. Continuous feed methods to be used. The Owner will furnish the water one time only at no cost. The Contractor shall provide the chlorine solution tank and means of approximately proportioning its flow. Piping from hydrants of the dilutant water and all other piping and appurtenances to be furnished by the Contractor. Contractor to perform the disinfection and subsequent flushing.

   All retest costs, where additional water for biological testing is required, will be borne by Contractor. Owner will, at Contractor's option, allow reimbursement or deduct from final estimate these costs.

5. The strong chlorine solution must be flushed from the test section. The Contractor shall provide means to discharge into an open drainage ditch or into a mixing box discharging to storm sewer. The flushed chlorine solution must not be a potential cause for environmental damage. Contractor must neutralize thoroughly any remaining chlorine residual within the water. Where applicable, Federal, State, and Local Regulatory Agencies must be contacted to determine special requirements for disposal of heavily chlorinated water.

6. The Owner will cause bacteriological samples to be taken and tested. If negative for coliform organisms, the Contractor may proceed with the next step of the work; otherwise the disinfection procedure is to be repeated with all costs borne by Contractor.

## IV. QUALITY ASSURANCE

### A. Submittals

1. Complete detail layout Plans showing fitting and pipe location, vertical and horizontal. Layout Plans to be minimum ¼-inch equals one foot.

2. Furnish sworn statement that inspection and all tests have been made and meet the requirements of AWWA C151.

3. Furnish certified test reports for flanged pipe in quadruplicate.

3600 W Sam Houston Pkwy S
Suite 600
Houston, TX 77042

Phone 713.953.5200
Fax 713.953.5026
www.lja.com

**January 16, 2025**

**Invoice No: 202452128**

For services through 12/31/2024

**Bill To:**
City of La Marque
1111 Bayou Road
La Marque, TX 77568

***Questions about the invoice?*** *Please email Billing@lja.com*

***Questions about the payment?*** *Please email AR@lja.com*

**Project No: E019-1014** **Wisteria Street Storm Sewer Improvements**

**Project Manager: Mark Havran**

Service Dates: From 11/30/2024 to 12/31/2024

Email invoice to Shannon Breaux s.breaux@cityoflamarque.org & pwpayables@cityoflamarque.org

| Fixed Fee Phases | | | Contract Amount | Percent Complete | Billed To Date | Previous Billed | Current Billed |
|---|---|---|---|---|---|---|---|
| **903** | Design Phase | | $49,000.00 | 100.00 | $49,000.00 | $49,000.00 | $0.00 |
| **904** | Bidding Phase | | $8,000.00 | 100.00 | $8,000.00 | $6,400.00 | $1,600.00 |
| **905** | Construction Phase | | $18,000.00 | 0.00 | $0.00 | $0.00 | $0.00 |
| | | *Subtotals* | *$75,000.00* | | *$57,000.00* | *$55,400.00* | *$1,600.00* |
| | | | | | | **Total Fixed Fees** | **$1,600.00** |

**TOTAL AMOUNT DUE** **$1,600.00**

**Mail checks payable to:**

LJA Engineering, Inc.
DEPT. 803
P.O. BOX 4346
Houston, TX 77210-4346

**Send ACH or Wire payments to:**

| | |
|---|---|
| Account Name | LJA Engineering, Inc |
| Name of Bank | Amegy Bank |
| ABA Routing Number | 113011258 |
| Account Number | 5795329241 |
| Swift Code | ZFNBUS55 |

*Please email a remittance advice to AR@lja.com*

713.450.1300
TBPELS F-1386
TBPELS 10110501
www.LJA.com
11821 East Freeway, Suite 360, Houston, Texas 77029

February 14, 2025

Mayor and City Council
City of La Marque
1109-B Bayou Road
La Marque, Texas 77568

RE: Bid Tabulation and Recommendation of Award for Construction of
Wisteria Drainage Improvements
LJA Project No. E019-1014

Mayor and City Council,

Bids for construction of the reference project were received on February 6, 2025, at 10:00 A.M. at City Council Chambers located at 1109-B Bayou Road, La Marque, Texas 77568 and subsequently read in public. Two (2) contracting firms submitted bids for the project. No error was found.

There were two (2) additional bidders that submitted the wrong bid form and therefore were disqualified.

The bidders from low to high and the correct total amounts bid for the Base Bid (Minus Items 5, 6, and 7), and Alternate Bid Items are as follows:

| Contractor | Location | Contract Amount |
|---|---|---|
| Mar-Con Services, LLC | Pasadena, TX | $535,088.50 |
| ISJ Underground Utilities | Arcola, TX | $594,046.40 |

A copy of the Bid Tabulation is attached.

The bidding documents of the bidders were examined and found to be in order.

Our investigation of Mar-Con Services, LLC, included a review of their surety, references of previous projects and past work experience. Based on our investigation, we recommend awarding the contract to the low bidder, Mar-Con Services, LLC.

If you have any questions or need additional information, please contact me at 713-657-6014.

Sincerely,

Mark Havran, P.E.
Senior Project Manager

Attachment

cc: Shannon Breaux, City of La Marque
Alex Sievers, GrantWorks
Les Dodson, LJA
Construction File 16.6

| | |
|---|---|
| Bid Tabulation For: | Construction of **Wisteria Drainage Improvements**<br>To Serve City of La Marque |
| Bid Opening Date: | February 6, 2025 |
| Bid Opening Location: | City Council Chambers<br>1109-B Bayou Road<br>La Marque, Texas 77568 |
| Tabulation By: | Tammy Endres |
| Tabulation Date: | 2/6/2025 |
| LJA Project No. | E019-1014 |

| Bidder's Name: | Total Bid Amount for Base Bid (Minus Items 5, 6, 7), Supplementary & Alternate Bid Items: |
|---|---|
| 1) Mar-Con Services, LLC | $623,085.00 |
| 2) ISJ Underground Utilities | $694,011.40 |

Calendar Days - 120

STATE OF TEXAS
MARK E. HAVRAN
118610
LICENSED PROFESSIONAL ENGINEER
2-12-25

I, Mark Havran, P.E., hereby certify these bid tabulations to be true and correct.

| **Bid Tabulation - Bid Opening, February 6, 2025**<br>**City of La Marque**<br>**Wisteria Drainage Improvements**<br>**LJA Project No. E019-1014**<br>**FRN F-1386** | | | | Mar-Con Services, LLC<br>1410 Preston Ave., Suite H<br>Pasadena, TX 77503<br>713-473-1800<br>Mario Ramos<br>mario@marconllc.com | | ISJ Underground Utilities<br>526 South Pine Street<br>Arcola, TX 77583<br>281-972-9097<br>Jose Vera<br>isjundergroundutilities@hotmail.com | |
|---|---|---|---|---|---|---|---|
| ITEM NO. | DESCRIPTION | EST. QTY. | UNITS | UNIT PRICE | TOTAL PRICE PER ITEM | UNIT PRICE | TOTAL PRICE PER ITEM |
| | **BASE BID ITEMS** | | | | | | |
| 1 | Existing Driveway Excavation, Complete in Place | 720 | SY | $10.10 | $7,272.00 | $5.00 | $3,600.00 |
| 2 | Select Fill, Compacted per ASTM D698, Complete in Place | 2,110 | CY | $26.40 | $55,704.00 | $12.00 | $25,320.00 |
| 3 | Crushed Limestone Bedding, Complete in Place | 20 | CY | $142.20 | $2,844.00 | $35.00 | $700.00 |
| 4 | 6-Inch Reinforced Concrete Pavement for Driveways (Minimum 5.5 Sacks per Cubic Yard), Complete in Place | 790 | SY | $70.50 | $55,695.00 | $95.00 | $75,050.00 |
| 5 | 36-Inch Reinforced Concrete Pipe, ASTM C-76, Class III, Complete in Place | 5 | LF | $281.30 | $1,406.50 | $201.50 | $1,007.50 |
| 6 | 24-Inch Reinforced Concrete Pipe, ASTM C-76, Class III, Complete in Place | 882 | LF | $124.90 | $110,161.80 | $117.50 | $103,635.00 |
| 7 | 24-Inch Arch Reinforced Concrete Pipe, ASTM C-76, Class III, Complete in Place | 757 | LF | $224.10 | $169,643.70 | $119.50 | $90,461.50 |
| 8 | Junction Box 1 Per Detail, Complete in Place | 1 | EA | $4,264.30 | $4,264.30 | $18,125.00 | $18,125.00 |
| 9 | Junction Box 2 Per Detail, Complete in Place | 1 | EA | $4,264.30 | $4,264.30 | $18,125.00 | $18,125.00 |
| 10 | Junction Box 3 Per Detail, Complete in Place | 1 | EA | $4,839.30 | $4,839.30 | $18,125.00 | $18,125.00 |
| 11 | Junction Box 4 Per Detail, Complete in Place | 1 | EA | $5,414.30 | $5,414.30 | $18,125.00 | $18,125.00 |
| 12 | Remove and Dispose of Existing Inlet, Complete in Place | 8 | EA | $448.50 | $3,588.00 | $200.00 | $1,600.00 |
| 13 | Remove Existing Culverts (36-Inch or Less), Complete in Place | 940 | LF | $17.90 | $16,826.00 | $10.00 | $9,400.00 |
| 14 | Type "A" Inlet Per Detail, Complete in Place | 27 | EA | $2,065.10 | $55,757.70 | $7,221.00 | $194,967.00 |
| 15 | Regrade Existing Ditch to Flowline as Specified in Plans, Complete In Place | 40 | LF | $13.90 | $556.00 | $15.00 | $600.00 |
| 16 | Traffic Control Plan, Complete in Place | 1 | LS | $108,846.40 | $108,846.40 | $6,500.00 | $6,500.00 |
| 17 | Trench Safety System, Complete in Place | 1,644 | LF | $0.90 | $1,479.60 | $0.10 | $164.40 |
| 18 | Turf Establishment, Full Sodding, Complete in Place | 915 | SY | $6.90 | $6,313.50 | $2.00 | $1,830.00 |
| 19 | SWPPP, Area Inlet Protection Barrier, Installed, Maintained, And Removed, Complete in Place | 2 | EA | $138.00 | $276.00 | $25.00 | $50.00 |
| 20 | SWPPP, Reinforced Filter Fabric Fence, Installed, Maintained, And Removed, Complete in Place | 70 | LF | $5.60 | $392.00 | $2.00 | $140.00 |
| | **SUB-TOTAL BASE BID ITEMS - ITEMS 1 - 20** | | | | **$615,544.40** | | **$587,525.40** |
| | | | | | | | |
| | **SUPPLEMENTARY ITEMS** | | | | | | |
| 21 | "Extra" Bank Sand, As Directed by Owner's Representative, Complete in Place | 100 | CY | $15.00 | $1,500.00 | $15.00 | $1,500.00 |
| 22 | "Extra" Crushed Limestone Bedding, As Directed by Owner's Representative, Complete in Place | 50 | CY | $141.50 | $7,075.00 | $30.00 | $1,500.00 |
| 23 | "Extra" Cement Stabilized Sand, 2.0 Sacks per Ton, As Directed by Owner's Representative, Complete in Place | 350 | TON | $35.00 | $12,250.00 | $35.00 | $12,250.00 |
| 24 | "Extra" Class A Concrete, As Directed by Owner's Representative, Complete in Place | 200 | CY | $100.00 | $20,000.00 | $100.00 | $20,000.00 |
| 25 | "Extra" Reinforcing Steel, As Directed by Owner's Representative, Complete in Place | 300 | LB | $2.00 | $600.00 | $2.00 | $600.00 |
| 26 | Pipe Saddle Inlet Per Detail, As Directed by Owner's Representative, Complete in Place | 1 | EA | $2,000.00 | $2,000.00 | $2,000.00 | $2,000.00 |
| 27 | Asphalt Surface Restoration, Including 8-Inch Thick Asphalt Base, Gr. 2, PG-64, Per TXDOT Item 292, and 2 1/2-Inch Thick HMHL Surface Coarse, Type "D" per TXDOT Item 340, Includes Saw-Cut and Removal of Existing Pavement, Complete in Place | 50 | SY | $95.30 | $4,765.00 | $95.00 | $4,750.00 |
| 28 | Surface Restoration, Concrete Surface, As Directed by Owner's Representative, Complete in Place | 50 | SY | $75.00 | $3,750.00 | $100.00 | $5,000.00 |
| 29 | Turf Establishment, Hydromulch Seeding, As Directed by Owner's Representative, Complete in Place | 0.5 | AC | $3,220.00 | $1,610.00 | $3,500.00 | $1,750.00 |
| 30 | 8-Inch Waterline (PVC, AWWA C-900, DR-18) with Ductile Iron Fittings, Open Cut, Joint Restraints (as necessary), Including Sections of Ductile Iron (AWWA C-151, Class 350) (as necessary) and Offsets as Shown on Plans, All Depths, As Directed by Owner's Representative, Complete in Place | 30 | LF | $205.80 | $6,174.00 | $140.50 | $4,215.00 |
| 31 | 8" Insertion Valve (AWWA) with Adjustable Box, Joint Restraint (as necessary), Accessories, Concrete Collar, As Directed by Owner's Representative, Complete in Place | 1 | EA | $2,500.00 | $2,500.00 | $19,500.00 | $19,500.00 |
| 32 | Water Valve Adjustment, As Directed by Owner's Representative, Complete in Place | 1 | EA | $400.00 | $400.00 | $400.00 | $400.00 |

| **Bid Tabulation - Bid Opening, February 6, 2025**<br>**City of La Marque**<br>**Wisteria Drainage Improvements**<br>**LJA Project No. E019-1014**<br>**FRN F-1386** | | | | Mar-Con Services, LLC<br>1410 Preston Ave., Suite H<br>Pasadena, TX 77503<br>713-473-1800<br>Mario Ramos<br>mario@marconllc.com | | ISJ Underground Utilities<br>526 South Pine Street<br>Arcola, TX 77583<br>281-972-9097<br>Jose Vera<br>isjundergroundutilities@hotmail.com | |
|---|---|---|---|---|---|---|---|
| ITEM NO. | DESCRIPTION | EST. QTY. | UNITS | UNIT PRICE | TOTAL PRICE PER ITEM | UNIT PRICE | TOTAL PRICE PER ITEM |
| 33 | 8-Inch Gate Valve (AWWA) with Adjustable Box, Joint Restraint (as necessary), Accessories, Concrete Collar, As Directed by Owner's Representative, Complete in Place | 1 | EA | $3,000.00 | $3,000.00 | $3,400.00 | $3,400.00 |
| 34 | Remove Existing Fire Hydrant and Replace with Fire Hydrant Assembly, With Restrained Joints, 4-Foot Bury, Concrete Collar, Thrust Block, As Directed by Owner's Representative, Complete in | 1 | EA | $9,677.20 | $9,677.20 | $10,800.00 | $10,800.00 |
| 35 | Construct New Polyethylene Tubing Service Connection (2-Inch or Smaller), Short Side, Including Tap, Pipe, Valves, and Connection to Meter, As Directed by Owner's Representative, Complete in Place | 2 | EA | $2,044.30 | $4,088.60 | $2,050.00 | $4,100.00 |
| 36 | Construct New Polyethylene Tubing Service Connection (2-Inch or Smaller), Long Side, Auger Beneath Road, Including Tap, Pipe, Valves, and Connection to Meter, As Directed by Owner's Representative, Complete in Place | 2 | EA | $2,303.30 | $4,606.60 | $2,100.00 | $4,200.00 |
| 37 | Sign Relocation and Relocate, As Directed by Owner's Representative, Complete in Place | 4 | EA | $125.00 | $500.00 | $125.00 | $500.00 |
| 38 | Concrete Storm Manhole (4-Foot Diameter), As Directed by Owner's Representative, Complete in Place | 1 | EA | $3,500.00 | $3,500.00 | $3,500.00 | $3,500.00 |
| | **SUB-TOTAL SUPPLEMENTARY ITEMS - ITEMS 21 - 38** | | | | **$87,996.40** | | **$99,965.00** |
| | | | | | | | |
| | **ALTERNATE BID ITEMS** | | | | | | |
| 39 | 18-Inch HP Storm Pipe, Pipe Conforms to TxDOT SS Item 4122, AASHTO M330, ASTN F2881 Type S, Complete in Place | 1,514 | LF | $75.80 | $114,761.20 | $75.50 | $114,307.00 |
| 40 | 24-Inch HP Storm Pipe, Pipe Conforms to TxDOT SS Item 4122, AASHTO M330, ASTN F2881 Type S, Complete in Place | 882 | LF | $97.50 | $85,995.00 | $99.00 | $87,318.00 |
| | **SUB-TOTAL ALTERNATE ITEM BID ITEMS - ITEMS 39 AND 40** | | | | **$200,756.20** | | **$201,625.00** |

**SUMMARY OF BID**

| | | | |
|---|---|---|---|
| **BASE BID ITEMS** | **ITEMS 1 - 20** | **$615,544.40** | **$587,525.40** |
| **SUPPLEMENTARY ITEMS** | **ITEMS 21 - 38** | **$87,996.40** | **$99,965.00** |
| **ALTERNATE BID ITEMS** | **ITEMS 39 - 40** | **$200,756.20** | **$201,625.00** |
| **TOTAL BASE BID, SUPPLEMENTARY, AND ALTERNATE BID ITEMS** | **ITEMS 1 - 40** | **$904,297.00** | **$889,115.40** |
| **TOTAL BASE BID AND SUPPLEMENTARY BID ITEMS** | **ITEMS 1 - 38** | **$703,540.80** | **$687,490.40** |
| **TOTAL BASE BID (MINUS ITEMS 5, 6, 7), SUPPLEMENTARY & ALTERNATE BID ITEMS** | **ITEMS 1-20 (MINUS 5,6,7) & ITEMS 21 - 40** | **$623,085.00** | **$694,011.40** |

# CITY COUNCIL AGENDA FORM

Meeting Date: March 10, 2025
Agenda Item: 9.VI.
Prepared by: Randall Aragon
Reviewed by:
Department: Police

**AGENDA ITEM DESCRIPTION:**
Approving the purchase of Body-Worn Cameras (BWC's) and In-Car Cameras with Axon Enterprise, Inc. in an amount not to exceed $620,000.00 - *Police*

**STAFF BRIEFING:**
The La Marque Police Department is in dire need of acquiring both in-car camera systems (none of the ones the city owns are functioning) and body-worn cameras (BWC's), as the BWC's are overdue for replacement.

**HISTORY:**
10/1/2024 - went out to bid for ARPA funding
10/31/2024 - bid opening for ARPA
2/5/2025 - no longer on the ARPA funding track; PD elected to move forward due to the need to update cameras for officer safety
City Attorney Gus Knebel was consulted on this agenda item.

**FISCAL IMPACT:**
Initial Payment of $143,000 to come out of KO in April 2025 (to pay for the in-car camera systems)
Additionally, the total will further be reduced via the SB224 (FY 2024) grant, for the purchase of 16 BWC's & 16 in-car camera systems.
Remaining annual payments (4 years) will come from 50% forfeiture funds and 50% budgetary funds
TOTAL:Not to exceed $620,000.00

Partnership
Police Department LA MARQUE Community

City of LaMarqueTx
Police Department

Randall Aragon
Chief of Police

**TO:** Chief Aragon

**CC:** Deputy Chief Waggoner

**FROM:** Lieutenant Anders

**DATE:** 02-13-2025

**SUBJECT:** In-Car Cameras for Patrol Units and Body-Worn Cameras for Officers

**DETAILS:**

This memo is regarding an urgent matter related to the lack of in-car camera systems and body-worn cameras (BWC) needing to be replaced.

Currently, **0** of our patrol units have **fully functioning in-car camera systems.**

LMPD officers are **currently equipped with body-worn cameras that are approximately 10 years old**.

All LMPD patrol officers are currently equipped with the "Axon Body 2" which was released in 2015. The "Body 4" is Axon's latest BWC model and has already been out since 2023.

I do not know when these problems began, nor do I know all the reasons for us getting here. But these are the facts, and we must fix it immediately.

In these current times, we know how important it is for officers to have BWCs and in-car camera systems. From liability reasons to evidentiary reasons, these two items are a "must-have."

I have included the contract which contains further information to get these purchased immediately. In summary, the contract is this:

**The total price for (27) Fleet 3 In-car Cameras and (34) Body 4 Body-Worn Cameras is $615,791.10. This includes our tax exemption, shipping, installation, training, and $109,154.40 in savings.**

We will immediately use the ~$143,000.00 “KO” that we (COLM) currently has. This will:

1.) Get the contract started as a “down payment.”
2.) That money will be a direct payment towards the in-car cameras (rules specified for KO).

After that, we will have the following payments:

**Apr 2026 -** $118,197.78
**Apr 2027 -** $118,197.78
**Apr 2028 -** $118,197.78
**Apr 2029 -** $118,197.78

**Total 615,791.10**

This contract will outfit our officers with the latest technology when it comes to recording devices that our Police Officers need. Furthermore, it includes Axon’s Technology Assurance Plan (TAP) which ensures we have the latest Axon devices during our contract, AND it locks us into lower rates when we renew our contract in 5 years.

pd.cityoflamarque.org
CITY OF LAMARQUE
GATEWAY TO THE GULF
431 Bayou Road • La Marque, TX 77568 PH: 409.938.9269 • FX: 409.935.0005

# Texas Police Chiefs Association Foundation

# ACCREDITATION AGREEMENT

This Agreement is entered into between La Marque Police Department, a duly constituted Texas Law Enforcement Agency (hereafter referred to as the "Applicant") and the Texas Police Chiefs Association Foundation (hereafter referred to as "TPCAF").

WITNESSETH

The Applicant and TPCAF, for and in consideration of the mutual covenants set forth in this Agreement and the compensation to be paid TPCAF by the Applicant herein specified, covenant and agree to be bound by the provisions, terms, and covenants contained herein. Therefore, each party covenants and agrees as follows:

1. PURPOSE OF THIS AGREEMENT:

1.1 The purpose of this Agreement is to establish the relationships between, and set the responsibilities of, the parties to this Agreement (a) by assessing the Applicant's compliance with the "Best Practices" established by TPCAF in order for TPCAF to determine if the Applicant is eligible for Accreditation Status; and (b) by maintaining compliance with those "Best Practices" by which they were accredited until the agency obtains accredited status again.

1.2 Unless specifically stated otherwise, all terms and conditions stated in this Agreement apply to initial accreditation and any subsequent accreditation. The Applicant is responsible for complying with all terms and conditions of this Agreement during the accreditation process.

2. DEFINITIONS:

The following definitions apply to terms used in this Agreement:

2.1 Accreditation Committee: A committee appointed and empowered by TPCAF to develop, revise and interpret accreditation "Best Practices" standards, as well as grant or deny accreditation to Applicants.

2.2 Accredited Status: Certification from TPCAF that the Applicant is in compliance with all applicable "Best Practices."

2.3 Assessors: Individuals appointed by Accreditation Committee, who will assist the Applicant in the Accreditation process and review the Applicant's compliance with all "Best Practices," observe the Applicant's operations, and report their findings to the Accreditation Committee.

2.4 "Best Practices": A list and description of Texas law enforcement practices and or policies that TPCAF determined to represent "Best Practices" for agencies to comply with.

3. APPLICANT RESPONSIBILITIES:

The Applicant agrees to:

3.1 Provide all information, using its best and honest judgment in good faith, requested by TPCAF;

3.2 Provide all documents, files, records, and other data as required by TPCAF so far as the same may be provided in accordance with laws, regulations and ordinances of the State of Texas and of Applicant; Applicant's agreement in this section 3.2 to provide such documents, files, records, and other data and Applicant's agreement in section 3.1 to provide such information is not an agreement to provide any information that would be confidential under the Texas Public Information Act or protectable under the Texas Public Information Act without full compliance with the terms of the Texas Public Information Act;

3.3 Conduct a self-assessment as to the degree of compliance with “Best Practices” that pertain to Applicant functions and provide full and accurate results thereof to TPCAF;

3.4 Provide one or more persons to assist TPCAF’s representatives, hereafter referred to as the “Assessors”, in making the necessary inquiries and assessments of Applicant information relative to compliance with the “Best Practices," provide access to files and records, and provide necessary facilities that are requested by the Assessors; and

3.5 Respond to all accreditation-related communications from TPCAF within ten (10) business days from receipt thereof.

3.6 The head of the law enforcement agency covered by this Agreement must be a member in the appropriate membership category in good standing of the Texas Police Chiefs Association at the time of application and maintain that membership for the duration of the Agreement.

4. TPCAF’S RESPONSIBILITIES:

TPCAF agrees to:

4.1 Provide necessary documentation, forms and instructions regarding the accreditation process;

4.2 Provide Assessors for the purpose of conducting an on-site assessment as to the Applicant’s compliance with applicable “Best Practices” and provide an Assessor to assist the Applicant with the accreditation process;

4.3 Promptly analyze all compliance data and advise the Applicant of (a) any need for additional information, and (b) the results of the on-site assessment;

4.4 Assess all compliance data against the "Best Practices" and certify the Applicant as Accredited if the applicable "Best Practices" are met and compliance is accepted by the Accreditation Committee;

4.5 If the Applicant is accredited, provide suitable indicators of accreditation as determined by TPCAF.

4.6 Following a review of compliance with the applicable "Best Practices," if the Applicant is not accredited by TPCAF at the time of review, the Applicant will be notified with the reasons for such determination within thirty (30) days.

5. TIME PERIOD COVERED BY THIS AGREEMENT:

5.1 This Agreement shall take effect when the Agreement is properly executed by the Applicant and TPCAF's authorized representative sign the Agreement.

5.2 The terms and covenants of this Agreement shall terminate in the following circumstances:

(a) Failure to achieve accreditation within twenty-four (24) months of TPCAF's acceptance of this Agreement except as provided in Section 5.3; or

(b) Upon written notice by the Applicant that the Applicant intends to withdraw from the accreditation process; or

(c) Upon termination pursuant to Section 6.2 hereof; or

(d) Upon notification pursuant to Section 15, that the Applicant cannot maintain compliance with applicable "Best Practices" set forth by TPCAF: or

(e) Upon failure of the Applicant to pay all fees and costs required by this Agreement relating to the Applicant's accreditation within the time mandated, except that the Agreement may be extended pursuant to Section 5.3; or

(f) Expiration or revocation of the Applicant's Accredited Status.

5.3 The Applicant may submit a written request to TPCAF to extend this Agreement in order to comply with the applicable "Best Practices" for accreditation. The Accreditation Committee, in its discretion, may grant an extension.

5.4 The initial Accreditation period shall be for forty-eight (48) months from the date the Applicant is approved for Accreditation.

5.5 Re-Accreditation: The Applicant must execute a Re-Accreditation Agreement at least twelve (12) months prior to the expiration of their Accredited Status. The terms and conditions of re-accreditation shall be as agreed upon in the Re-Accreditation Agreement.

Failure to timely execute a Re-Accreditation Agreement with TPCAF may result in the lapse of the Applicant's Accredited Status.

6. MODIFICATIONS:

6.1 Applicant shall not make any modifications to this Agreement except in writing, signed and agreed to by both parties, and executed with the same formalities as this document.

6.2 The Applicant recognizes and acknowledges that it may be necessary for TPCAF to make reasonable modifications and amendments to the Agreement and other related documents, including but not limited to the accreditation "Best Practices" and procedures thereto. Applicant shall be notified of such modifications and/or amendments in writing. In the event the Applicant refuses or is unable to comply with any modifications or amendments, TPCAF reserves the right to terminate this Agreement after due consideration thereof by giving written notice as required by Section 17. Applicant will be given reasonable opportunity to justify Applicant's inability to adopt any or all modifications or amendments prior to TPCAF terminating this agreement.

6.3 Applicant must utilize the most current edition of the TPCAF "Best Practices" Manual at the time of signing this Agreement.

7. TIME AND MANNER OF PAYMENT:

7.1 The Applicant must remit the first year's fee, as shown in 7.1(a), within thirty (30) days of being notified in writing of the acceptance by TPCAF of the Agreement. Annual fees are due on the anniversary date of the Agreement. The amount due is based on the number of sworn personnel in the Applicant's agency. These fees may be changed by TPCAF after written notification to all Applicants, Accredited and Re-Accredited agencies. This fee is not refundable. Applicant understands and agrees that payment of any fee or expenses does not insure in any way or manner that Applicant will become or remain an Accredited agency.

7.1(a) Annual Fee Schedule:

Number of Sworn Personnel:

| | |
|---|---|
| 1-10 | $600.00 |
| 11-19 | $750.00 |
| 20-25 | $1000.00 |
| 26-50 | $2000.00 |
| 51-100 | $2500.00 |
| 101-200 | $3000.00 |
| 201 or more | $3500.00 |

7.2 Applicant agrees to pay for reasonable costs incurred by TPCAF for on-site assessment. This includes travel, lodging, meals and any other necessary incidentals to the on-site assessment.

8. NEWS RELEASES:

8.1 TPCAF shall have the right to identify the Applicant in a news release and any publicity program that TPCAF deems appropriate after the Applicant's on-site review has been completed and the Applicant has obtained Accredited status.

8.2 The Applicant shall provide TPCAF with a copy of all its news releases or publicity material concerning its accreditation activities.

9. TPCAF AS AN INDEPENDENT CONTRACTOR:

In all matters pertaining to this Agreement, TPCAF shall be acting as an independent contractor and neither TPCAF nor any officer, employee or agent of TPCAF will be deemed an employee of the Applicant. The selection and designation of the personnel of TPCAF, as it relates to performance of its responsibilities under this Agreement, shall be made by TPACF.

10. INDEMNIFICATION:

To the extent allowed by Texas law, the Applicant shall indemnify and hold harmless TPCAF, its officers, Evaluators, Assessors, Facilitators, employees, volunteers and agents from any and all liability, loss or damage, including costs of defense and reasonable attorney's fees, which may be suffered or incurred as a result of claims, demands, suits or actions arising out of or relating to the performance of either party under this Agreement or by the adoption or use by Applicant of "Best Practices." This indemnification shall not apply to any claims based on TPCAF's intentional wrongdoing or gross negligence in its performance under this Agreement.

11. INTEGRATION:

This instrument embodies the whole Agreement of the parties. The parties warrant that there are no promises, terms, conditions, or obligations other than those contained herein. This Agreement shall supersede all previous communications, representations, or agreements, either oral or written, between the parties hereto.

12. SEVERABILITY:

If any provision of this Agreement or the application of such provision to any person or circumstance shall be held invalid, the remainder of this Agreement and the application of such provisions to persons or circumstances other than those to which it is held invalid, shall not be affected thereby.

13. WARRANTY NOT INTENDED OR IMPLIED:

It is understood that TPCAF's award of accreditation does not constitute a warranty, expressed or implied, of total or continued compliance by the Applicant with all applicable "Best

Practices" and further, that it is not a substitute for the Applicant's ongoing and in-depth monitoring and evaluation of its activities and quality of its services.

14. APPLICABLE LAW:

This agreement shall be governed and construed in accordance with the laws of the State of Texas.

15. MAINTAINING THE APPLICANT'S ACCREDITED STATUS:

15.1 If the Applicant is awarded Accredited Status by TPCAF, the Applicant agrees to remain in compliance with those "Best Practices" under which accreditation is awarded. After an award of accreditation, the Applicant agrees to (a) file an annual report that certifies its continuing compliance on a form approved by TPCAF and (b) promptly notify TPCAF when it cannot or chooses not to maintain compliance with "Best Practices" under which it was accredited.

15.2 If TPCAF has determined that reasonable grounds exist to believe that an agency is not in compliance with the applicable "Best Practices" under which accreditation was awarded, TPCAF may require an on-site review (full or partial) at any time during the Applicant's accreditation period at the Applicant's expense. TPCAF may revoke accredited status if the review indicates that the Applicant is not in compliance with the "Best Practices" under which it was accredited or may take such other action as TPCAF deems appropriate.

15.3 If an Agency does not apply for Re-Accreditation or an Accredited or Re-Accredited Agency notifies TPCAF in writing that they no longer will participate in "Best Practices" or Agreement is terminated under 6.2 or Accredited Status is revoked under 15.2 or the Agency has not paid the required fees in a timely manner the Agency shall remove all signs, symbols, designations or any other indicia of being an Accredited or Re-Accredited agency within thirty (30) days of the end of the Accredited or Re-Accredited Status period or when notified in writing of status being revoked or terminated.

16. WAIVER:

Any waiver by TPCAF of any breach of this Agreement by the Applicant shall relate only to that particular breach and shall not amount to a general waiver.

17. NOTICE:

Any notice between the parties shall be in writing to the addresses as specified in this Agreement or to such other address as either party may specify in writing in accordance with this section. Notice, with respect to the terms and conditions of this Agreement, to be effective, shall be by registered, certified or express mail.

18. HEADINGS:

The headings of this Agreement shall not be deemed part of it and shall not in any way affect its construction.

19. CONSENT TO BE BOUND:

19.1 The Applicant has read and agrees to and accepts the conditions set forth by TPCAF and its accreditation process.

19.2 This Agreement has been approved by all necessary Applicant action and the persons signing on behalf of the Applicant certifies they are duly authorized to sign and bind the Applicant to all terms and conditions. The Head of the Agency making application and the Official Head of the governmental entity responsible for the Agency must sign the Application.

IN WITNESS WHEREOF, the Applicant has caused this Agreement to be executed on the _____ day of _____, 2025.

| ON BEHALF OF THE GOVERNMENTAL ENTITY: | ON BEHALF OF THE AGENCY: |
|---|---|
| _____ | _____ |
| Signature | Signature |
| _____ | _____ |
| Name (typed/printed) | Name (typed/printed) |
| _____ | _____ |
| Title | Title |
| | _____ |
| | Name of Agency |
| | _____ |
| | Address |
| | _____ |
| | City, State, Zip |

On Behalf of TPCAF:

DATE:_____

BY: _____

Gene Ellis
TPCA Executive Director
Texas Police Chiefs Association Foundation
P.O. Box 1030
Elgin, Texas 78621

# CITY COUNCIL AGENDA FORM

Meeting Date: March 10, 2025
Agenda Item: 9.VIII.
Prepared by:
Reviewed by:
Department: City Clerk

**AGENDA ITEM DESCRIPTION:**
Determining a structure for a Special Events Committee - *Mayor*

**STAFF BRIEFING:**
At the previous council meeting Mayor Bell requested that the City Clerk research the creation of a special events team that included both city staff and volunteers. Through research the CIty Clerk determined that this model is not frequently used in the region, as most special event committees in the area are internal. However, this model has been used in other places.

The recommendation is to create a committee that includes:
Staff position representatives of the City Managers Office, Finance, Communications, Public Works, Police, and Fire
4 Community Positions: representatives of the Economic Development Corporation and Parks Board, and 2 appointments by the Mayor to be ratified by the council
Ex-Officio: Mayor/ Mayor Pro Tem

**HISTORY:**
this is the first time this item has been presented to the council.

**FISCAL IMPACT:**
unknown.

# Chapter 14.50
# SPECIAL EVENTS CODE

Sections:

14.50.010 Title.
14.50.020 Purpose.
14.50.030 Territorial application.
14.50.040 Policy.
14.50.050 Intent.
14.50.060 Definitions.
14.50.070 Special events committee – Membership.
14.50.080 Powers of the special events committee.
14.50.085 Exemption to the noise control code.
14.50.090 Application and processing of permits and post event evaluation.
14.50.100 Decision.
14.50.110 Conditions authorized and additional permits.
14.50.120 Permit fee and charges.
14.50.130 Hold harmless.
14.50.140 Insurance requirements.
14.50.150 Adoption of procedures.
14.50.160 Liability.
14.50.170 Violation.
14.50.180 Review of the special events code.

## 14.50.010 Title.

This chapter shall be known as the special events code. It is referred to herein as the “code.” (Ord. 4622 § 1, 1993.)

## 14.50.020 Purpose.

It is the purpose of this code to provide for the issuance of special event permits to regulate events on the public streets and public property of the city in the interest of public health, safety and welfare; and to provide for fees, charges and procedures required to administer the permit process. (Ord. 4622 § 1, 1993.)

## 14.50.030 Territorial application.

This code and the procedures adopted hereunder shall be in effect throughout the city. (Ord. 4622 § 1, 1993.)

## 14.50.040 Policy.

It is the policy of the city, as implemented through this code and any procedures adopted hereunder, to recognize the substantial community benefits that result from special events. These events provide cultural enrichment, promote economic vitality, and enhance community identity and pride. They also may provide opportunities for family activities and funding for our community's nonprofit agencies. Partnerships between the city, event sponsors and the community are valuable in ensuring successful events. Therefore, the city will strive to accommodate special events. The city recognizes that events can be difficult to implement successfully and that the city requirements may represent a significant portion of an event's costs. When setting fees and conditions for events, the city will be sensitive to their impacts on the event's costs while balancing the city's obligation to protect public health and safety. It is the city's goal to have successful special events that enrich and enliven the community.

It is the policy of the city that events be staged in various areas in Bellevue (Downtown, Eastgate, Crossroads, Wilburton Hill, Newport Hills, and Factoria) when feasible, thus encouraging the participation by a greater number of Bellevue citizens. The city also recognizes that certain events are site-specific; therefore flexibility is important when determining event locations. (Ord. 4991 § 2, 1997; Ord. 4622 § 1, 1993.)

## 14.50.050 Intent.

It is the specific intent of this code and any procedures adopted hereunder to place the obligation of complying with the requirements of this code upon the applicant or sponsor, and no provision hereof is intended to impose any duty upon the city or any of its officers, employees or agents. Nothing contained in this code or any procedures adopted hereunder is intended to be or shall be construed to create or form the basis for liability on the part of the city, or its officers, employees or agents, for any injury or damage resulting from the failure of the applicant or sponsor to comply with the provisions hereof. (Ord. 4622 § 1, 1993.)

## 14.50.060 Definitions.

The following words and phrases when used in this chapter shall mean:

"Annual event" means an event recurring each year at approximately the same date which has previously complied with the permit requirements of this code.

"Applicant" means the authorized agent of the sponsor who completes the application and acts as primary contact for the special event.

"Closed route" means a route along or across a public right-of-way on which nonemergency vehicle traffic is not permitted to proceed for the entire duration of a special event.

"Event participants" means a person in attendance at an event, including spectators, vendors, event staff, city staff, and all others present for the purpose of the event.

"Fair/carnival" means a stationary event, held for one or more days.

"Notice of intent" means a notice to stage a special event submitted by an applicant which informs the city of a proposed event.

"Parade" means any organized group marching or in procession, whether on foot, animal, or vehicle.

"Procedure" means a procedure adopted by the special events committee, to implement this code, or to carry out other responsibilities as may be required by this code or by other codes, ordinances, or resolutions of the city or other agencies.

"Race/run" means an organized event upon a public street, sidewalk, or trail in which 10 or more persons participate by walking, running, riding a bicycle, or operating a wheelchair.

"Right-of-way use permit" means a permit issued pursuant to the Right-of-Way Use Code Chapter 14.30 BCC.

"Rolling closure route" means a street, sidewalk, trail, walkway, or other right-of-way closure to accommodate an event, where as the event passes, the right-of-way is reopened for use by the general public.

"Special event" means a sponsored event held on the public streets, sidewalks, walkways, or on other publicly owned property which interferes with normal vehicular or pedestrian traffic and requires the use of city services.

"Sponsor" means the person or group responsible for the special event to be held.

"Temporary special events license" means the license required under Chapter 5.12 BCC.

"Temporary use permit" means a permit issued pursuant to Chapter 20.30 LUC.

"Transportation management/parking plan" means a plan developed by the applicant/sponsor to identify and mitigate traffic/parking impacts, conditions, and proposed solutions associated with a special event (includes transportation demand management measures). (Ord. 4714 § 1, 1994; Ord. 4622 § 1, 1993.)

## 14.50.070 Special events committee – Membership.

There is created hereby a special events committee to carry out the provisions of this code. In order to assure working representation from all appropriate segments of the community and to provide effective deliberation and stakeholder approval of all impacting events, the special events committee shall consist of the following members:

A. One representative each from the police, fire, parks, development services, and transportation departments.

B. A representative from Metro Transit.

C. A representative from the downtown business district.

D. Three business representatives appointed by the city council, one to represent the area west of I-405 and north of I-90, one to represent the area east of I-405 and north of I-90, and one to represent the area south of I-90.

E. Four neighborhood representatives appointed by the city council, two to represent the area west of I-405 and north of I-90, one to represent the area east of I-405 and north of I-90, and one to represent the area south of I-90.

F. Two event promoter representatives appointed by the city council, one to represent volunteer promoters and one to represent paid promoters.

G. The chair of the committee shall be from the lead department. The chair shall provide for maintaining committee records, arranging meeting times and places and issuing permits on behalf of the committee. (Ord. 5821 § 18, 2008; Ord. 5516 § 1, 2004; Ord. 4991 § 1, 1997; Ord. 4622 § 1, 1993.)

## 14.50.080 Powers of the special events committee.

The special events committee shall have the power to:

A. Interpret and administer this code;

B. Represent the city, under the authority of the city manager, in discussions and in maintaining agreements with the person(s) who represents the event;

C. Coordinate with city departments and with other government agencies for the provision of governmental services for such special events;

D. Establish terms and conditions, appropriate fees, and the time(s), place and manner of the event;

E. Approve or deny special events permits;

F. Adopt policies and procedures for administering this code as necessary; and

G. Recommend to the city manager or his/her designee whether to grant an exemption to the noise control code under BCC 9.18.020(A)(13). The special events committee shall make such recommendation to the city manager or his/her designee based on the criteria set forth in BCC 14.50.085. (Ord. 5722 § 1, 2007; Ord. 4622 § 1, 1993.)

## 14.50.085 Exemption to the noise control code.

A. Upon recommendation by the special events committee, the city manager or his or her designee will grant or grant with conditions an exemption to the noise control code pursuant to BCC 9.18.020(A)(13) if the use of the sound amplification equipment:

1. Will not constitute a public nuisance;

2. Will not endanger the public health or safety;

3. Will not endanger public property; and

4. Is associated with an event that is open to the general public.

B. Violations of permits issued pursuant to this section shall be considered a civil noise infraction enforced as set forth in Chapter 9.18 BCC. (Ord. 5722 § 2, 2007.)

## 14.50.090 Application and processing of permits and post event evaluation.

A special events permit must be obtained from the city to stage a special event. (If a proposed use or event would require both a right-of-way use permit under Chapter 14.30 BCC and a special events permit under this chapter, then the application will be processed under this chapter and a right-of-way use permit under Chapter 14.30 BCC will not be required.) The following procedure applies:

A. A notice of intent must be submitted to the city by the special event applicant/sponsor, listing location/route, date, and time. The notice of intent must be filed at least 90 days prior to the date of the proposed event to allow adequate review time, provided this requirement shall not apply to a special event which is sponsored or cosponsored by the city. A notice of intent for annual events must be submitted by January 15th of the year in which the event is to be held and will be processed within 60 days. First time events will be encouraged to list several options for location, route, date, and time.

B. The special events committee shall review the notice of intent and determine if the event can be accommodated. The committee shall meet with the applicant/sponsor to prioritize locations/routes. Applicant is required to provide to the committee a complete package of information on the proposed event, including a tentative site plan and activities involved with the event.

C. A notice of pending decision on first time or significantly changed events must be mailed by the city to affected businesses/residents (to be determined on a case-by-case basis by the special events committee) along with a request for written comments.

D. The special events committee shall meet with the applicant/sponsor to discuss comments received and possible conditions and fees.

E. After knowing possible conditions/fees the applicant must apply for a formal special event permit and pay an application fee in accordance with BCC 14.50.120.

F. The special events committee shall make a decision on the application and set any conditions and fees, in accordance with BCC 14.50.110 and 14.50.120, and upon payment issue the permit.

G. The special events committee shall notify the city council of approval of events.

H. The applicant/sponsor must provide notification to the affected area (to be determined on a case-by-case basis by the special events committee) regarding approval of the event, date(s), time(s), and location/route, to take place 15 days prior to event.

I. A post event evaluation shall be conducted by the special events committee. The evaluation may include a survey of affected residents/businesses and a meeting with the applicant/sponsor and the special events committee. (Ord. 4714 § 2, 1994; Ord. 4655 § 1, 1994; Ord. 4622 § 1, 1993.)

## 14.50.100 Decision.

In deciding whether to approve, approve with conditions, or deny a permit, the special events committee shall determine whether:

A. The event, as proposed, can be shown to function safely;

B. The diversion of police and fire resources to support the event will not deny reasonable police and fire protection to the city;

C. The special event will not cause unreconcilable interference with previously approved and/or scheduled construction, maintenance or other activities;

D. The special event sponsor/applicant provides a transportation management/parking plan for traffic control/parking management which may include accommodating transportation demand management measures;

E. The location/route meets the criteria established in the procedures. (Ord. 4622 § 1, 1993.)

## 14.50.110 Conditions authorized and additional permits.

A. The special events committee may include in a special event permit, among other provisions, reasonable terms or conditions as to the time, place and manner of the event; compliance with health and sanitary regulations, emergency services, and security. Additional permits may be required to meet the conditions established by the permit, and/or other city codes.

B. In order to accommodate other concurrent events, the rights of abutting owners and the needs of the public to use streets or parks, the conditions may include, but not be limited to, reasonable adjustments in the date,

time, route or location of the proposed event; accommodations of pedestrian or vehicular traffic using the street; and limitations on the duration of the event. (Ord. 4622 § 1, 1993.)

## 14.50.120 Permit fee and charges.

A. Permit fees and charges are based on a flat fee schedule depending on the type of event and duration/ participation level.

B. *Application Fee.* Thirty-five dollars to cover permit processing (nonrefundable).

**Fee Schedule**

| Type of Event | Fee |
|---|---|
| Fun run/bike race (rolling closure) | $1,400 |
| Race/parade (closed course) | |
| Less than or equal to 3 hours per day | 3,500 |
| Greater than 3 hours per day | 5,600 |
| Fair/carnival | |
| (Daily participation over entirety of event) | |
| Less than 5,000 event participants | 1,050 |
| 5,000 – 25,000 event participants | 5,000 |
| 25,001 – 50,000 event participants | 7,000 |
| Greater than 50,001 event participants | 10,500 |

The fees above will be increased or decreased effective January 1st of each year (beginning January 1, 1996) to reflect the current published annual change in the Seattle Consumer Price Index for wage earners and clerical workers.

Additional fees may include park department user fees. Fees associated with permit conditions (i.e. electrical, security, fire, etc.) are in addition to the above fee schedule and are the sole responsibility of the applicant/sponsor.

Temporary special event license fees paid to the city will be deducted from the above fee schedule. In the event that the temporary special event license fees exceed the fee for the special event permit, no credit will be given and the higher fee will be charged.

C. *When Payable.* A $35.00 application fee is required when the applicant/sponsor files the application. Fees assessed from the fee schedule are payable 30 days prior to the event taking place.

If the applicant/sponsor is anticipating paying a temporary special events license fee, a $2,000 deposit shall be required 30 days prior to the event, and balance shall be required 30 days after the event has taken place and final assessments of fee are determined.

D. *Refund.* Fees charged from the fee schedule are refundable (minus the $35.00 application fee), if the special event is canceled after the permit is issued, and written notice is received by the special events committee 30 days prior to the date of the event.

A sponsor which is financially unable to pay all or a portion of the permit fees and charges under this section may apply to the special events committee for a waiver of such fees and charges. The sponsor may be required to provide such financial information, including information as to income and assets, as to enable the committee to determine if the sponsor is, in fact, unable to pay such fees and charges. The committee may waive such fees and charges as it determines a sponsor is financially unable to pay. (Ord. 4714 § 3, 1994; Ord. 4622 § 1, 1993.)

## 14.50.130 Hold harmless.

As a condition to the issuance of any permit under this chapter, the applicant shall agree to defend, indemnify and hold harmless the city, its officers, employees and agents, for any and all suits, claims or liabilities caused by, or arising out of any use authorized by any such permit. (Ord. 4622 § 1, 1993.)

## 14.50.140 Insurance requirements.

The applicant shall provide general liability insurance naming the city as an additional insured. Limits of coverage will be determined by the city's risk manager at the time of application. Certificates of insurance are to be submitted to the city for approval 14 working days prior to the day of the event. Acceptability of insurance is subject to approval by the city's risk manager. (Ord. 4622 § 1, 1993.)

## 14.50.150 Adoption of procedures.

The city may prepare and adopt procedures for the purpose of implementing this code or to carry out other responsibilities as may be required by this code or other codes, ordinances of the city or other agencies. Such procedures do not require approval by the city council. (Ord. 4622 § 1, 1993.)

## 14.50.160 Liability.

The city and employees charged with enforcement and administration of this code, acting for the city in good faith and without malice in the discharge of their duties shall not thereby render themselves liable personally for any damages which may accrue to persons or property as a result of any act required by or by reason of any act or omission in the discharge of such duties. (Ord. 4622 § 1, 1993.)

## 14.50.170 Violation.

Any person violating any provision of this code is guilty of a civil infraction, Chapter 1.18 BCC. (Ord. 4622 § 1, 1993.)

## 14.50.180 Review of the special events code.

A review of the code will take place every two years, with fee schedules being adjusted to meet city costs for services. (Ord. 4622 § 1, 1993.)

---

**The Bellevue City Code is current through Ordinance 6829, passed December 10, 2024.**

Disclaimer: The city clerk's office has the official version of the Bellevue City Code. Users should contact the city clerk's office for ordinances passed subsequent to the ordinance cited above.

City Website: www.bellevuewa.gov
City Telephone: (425) 452-6800

Hosted by General Code.

# Special Events Committee Overview

The primary goal of Impact on Education's Special Events Committee is to elevate and engage new and current supporters in Impact on Education event experiences. Make each special and third-party fundraising event feel fun, exciting, and welcoming for guests.

The secondary goals of the committee are to introduce more people to Impact on Education's work and to raise funds for the organization.

## Committee Roles and Responsibilities

The Special Events committee is responsible for

- Developing committee goals to achieve special event revenue and engagement goals each year.
- Planning special events on behalf of IOE: Developing a theme, securing entertainment and activities, designing the space and sourcing and selecting decor
- Assisting in the executing of events on behalf of IOE, specifically the annual Gala
- Working with other organizations, volunteers, and committee members to organize third-party events and activities
- Attending committee meetings monthly and other events and functions as requested.
- Acting as ambassadors and advocates for IOE in personal and professional settings.
- Assisting in the identification and recruitment of new committee members.

The Special Events Committee will have the following sub-committees

- Program content and entertainment sub-committee
- Funding sub-committee
- Decorating sub-committee
- Volunteer sub-committee

Sub-Committees can include members outside of the Special Events Committee and will report to the full committee.

**Time Commitment:**

- Attend meetings monthly for 1-2 hrs
- Event preparation 2-4 hours per month (when events/event planning is happening)
- Attend special events 2-3 hrs per event

Updated 1.12.23

# CITY COUNCIL AGENDA FORM

Meeting Date: March 10, 2025
Agenda Item: 9.IX.
Prepared by:
Reviewed by:
Department: Administration

**AGENDA ITEM DESCRIPTION:**

**STAFF BRIEFING:**

**HISTORY:**

**FISCAL IMPACT:**

# INVOICE

Provision Specialized Resources, LLC
3698 Vernon Drive
Zachary, Louisiana 70791
(225) 405-1926

DATE: JANUARY 23, 2025
INVOICE # LMQ-60

TO City of La Marque, Tx

Work Order #2024-12-09

| HOURS | DESCRIPTION | UNIT PRICE | LINE TOTAL |
|---|---|---|---|
| | Grant Identification and Project Development | | $10,000.00 |
| | | | |
| | | | |
| | | | |
| | | | |
| | | | |
| | | | |

| | |
|---|---|
| SUBTOTAL | $10,00.00 |
| SALES TAX | |
| TOTAL | **$10,00.00** |

| Invoice # LMQ-60 | Task | Hours Worked | Cost Per Hour | Total Cost |
|---|---|---|---|---|
| | Identification and Eval of Grant Opportunities | 20 | $ 50.00 | $ 1,000.00 |
| | Eligibility Review | 15 | $ 75.00 | $ 1,125.00 |
| | Track & Notations | 12 | $ 75.00 | $ 900.00 |
| | Possible Project Breakdown | 15 | $ 90.00 | $ 1,350.00 |
| | Eligibility Training | 5 | $ 75.00 | $ 375.00 |
| | City Communication & Review | 17 | $ 50.00 | $ 850.00 |
| | Departmental Communication & Approval | 16 | $ 50.00 | $ 800.00 |
| | Final Review Plan | 20 | $ 75.00 | $ 1,500.00 |
| | Funder Communication | 10 | $ 75.00 | $ 750.00 |
| | Final Project Determination | 15 | $ 90.00 | $ 1,350.00 |
| | **TOTAL** | | | **$ 10,000.00** |

# INVOICE

Provision Specialized Resources, LLC
3698 Vernon Drive
Zachary, Louisiana 70791
(225) 405-1926

DATE: DECEMBER 9, 2024
INVOICE # LMQ-54

TO City of La Marque, Tx
Police Department
Attn: Chief Randall Aragon

Q3-2024 Rural & Small Communities Administration

| HOURS | DESCRIPTION | UNIT PRICE | LINE TOTAL |
|---|---|---|---|
| 2 | Filing Financial Report | $50.00 | $100.00 |
| | | | |
| | | | |
| | | | |
| | | | |

| | |
|---|---|
| SUBTOTAL | $100.00 |
| SALES TAX | |
| TOTAL | **$100.00** |

# INVOICE

Provision Specialized Resources, LLC
3698 Vernon Drive
Zachary, Louisiana 70791
(225) 405-1926

DATE: DECEMBER 2, 2024
INVOICE # LMQ-57

TO City of La Marque, TX
Police Department

FY24 SB224 Catalytic Convertor Active Grant

| HOURS | DESCRIPTION | UNIT PRICE | LINE TOTAL |
|---|---|---|---|
| 12 | ONGOING-Budget Changes/Reporting/Operational Plan/DA Letter/Multiple Calls & Correspondence with MVCPA | $75.00 | $900.00 |
| | | | |
| | | | |
| | | | |
| | | | |
| | | SUBTOTAL | $900.00 |
| | | SALES TAX | |
| | | TOTAL | **$900.00** |

# INVOICE

Provision Specialized Resources, LLC
3698 Vernon Drive
Zachary, Louisiana 70791
(225) 405-1926

DATE: JANUARY 6, 2025
INVOICE # LMQ-58

TO City of La Marque, TX

FY24 COPS Hiring Grant

| HOURS | DESCRIPTION | UNIT PRICE | LINE TOTAL |
|---|---|---|---|
| 10 | Resolution/Council Meeting/Contract Stipulations/Contract | $50.00 | $500.00 |
| | | | |
| | | | |
| | | | |
| | | | |
| | | | |
| | | | |
| | | SUBTOTAL | $500.00 |
| | | SALES TAX | |
| | | TOTAL | **$500.00** |

# INVOICE

Provision Specialized Resources, LLC
3698 Vernon Drive
Zachary, Louisiana 70791
(225) 405-1926

DATE: DECEMBER 2, 2024
INVOICE # LMQ-56

TO City of La Marque, TX
Police Department

Lonestar Grant

| HOURS | DESCRIPTION | UNIT PRICE | LINE TOTAL |
|---|---|---|---|
| 5 | ONGOING Award Acceptance/Resolution/Communication | $75.00 | $375.00 |
| | | | |
| | | | |
| | | | |
| | | | |

| | |
|---|---|
| SUBTOTAL | $375.00 |
| SALES TAX | |
| TOTAL | **$375.00** |

# INVOICE

Provision Specialized Resources, LLC
3698 Vernon Drive
Zachary, Louisiana 70791
(225) 405-1926

DATE: DECEMBER 2, 2024
INVOICE # LMQ-55

TO City of La Marque, TX
Police Department

FY25 Catalytic Convertor Grant Application

| HOURS | DESCRIPTION | UNIT PRICE | LINE TOTAL |
|---|---|---|---|
| | Application Submittal | | $6,450.00 |
| | | | |
| | | | |
| | | | |
| | | | |
| | | SUBTOTAL | $6,450.00 |
| | | SALES TAX | |
| | | TOTAL | **$6,450.00** |

| Invoice # LMQ-55 | Task | Hours Worked | Cost Per Hour | Total Cost |
|---|---|---|---|---|
| | Training/Webinars | 1 | $50.00 | $50.00 |
| | Task Breakdown | 2 | $75.00 | $150.00 |
| | Initial Documentation Request to City Contact | 2 | $25.00 | N/C |
| | Agenda/Resolution | 1 | $50.00 | $50.00 |
| | Database Registration | 1 | $25.00 | N/C |
| | Data & Research | 5.25 | $125.00 | $656.25 |
| | Standard Forms | 1 | $75.00 | $75.00 |
| | Letters of Recommendation | 4.25 | $75.00 | $318.75 |
| | Identify Stakeholders/Community Partners | 2 | $50.00 | $100.00 |
| | Stakeholders/Community Communication | 2 | $50.00 | $100.00 |
| | Technical Writing | 10 | $175.00 | $1,750.00 |
| | Statistic Backup Research/Writing | 8 | $125.00 | $1,000.00 |
| | Communication w/City | 15 | $50.00 | N/C |
| | Engineering Request | 0 | $25.00 | N/C |
| | Data/Statistics/Mapping/Pictures/Timeline | 6 | $95.00 | $570.00 |
| | Quotes | 4 | $50.00 | $200.00 |
| | Budget Development | 5 | $125.00 | $625.00 |
| | Report Building | 4 | $125.00 | $500.00 |
| | Attachment/Documentation Collection from Assigned City Contact | 2 | $90.00 | N/C |
| | Final Check Off | 1.5 | $75.00 | $112.50 |
| | Final Submission | 1 | $125.00 | $125.00 |
| | Follow-Up | 1 | $75.00 | $75.00 |
| | **TOTAL:** | 79 | | $6,450.00 |

# INVOICE

Provision Specialized Resources, LLC
3698 Vernon Drive
Zachary, Louisiana 70791
(225) 405-1926

DATE: JANUARY 9, 2025
INVOICE # LMQ-52

TO City of La Marque, TX

Public Works- Water
Texas Water Development Board-PIC 2" Waterline

| HOURS | DESCRIPTION | UNIT PRICE | LINE TOTAL |
|---|---|---|---|
| | Texas Water Development Board-PIC 2" Waterline | | |
| 2 | Disadvantaged Communities Data & Research | $125.00 | $250.00 |
| 2 | LMI/Poverty Reports | $125.00 | $250.00 |
| 2 | Justice 40 Reports | $125.00 | $250.00 |
| 4.5 | Disadvantaged/LMI/Technical Writing | $150.00 | $675.00 |
| 1.5 | Final Review & Upload | $50.00 | $75.00 |
| | | SUBTOTAL | $1,500.00 |
| | | SALES TAX | |
| | | TOTAL | **$1,500.00** |

# INVOICE

Provision Specialized Resources, LLC
3698 Vernon Drive
Zachary, Louisiana 70791
(225) 405-1926

DATE: DECEMBER 2, 2024
INVOICE # LMQ-53

TO City of La Marque, TX
Parks

PARKS-CIP
AARP Biking Audit

| HOURS | DESCRIPTION | UNIT PRICE | LINE TOTAL |
|---|---|---|---|
| 10 | Active Project Ongoing (Status Reporting, Monthly Status Calls with AARP & Bicycle America, working with Ms. Tonia) | $50.00 | $500.00 |
| | | | |
| | | | |
| | | | |
| | | | |

| | |
|---|---|
| SUBTOTAL | $500.00 |
| SALES TAX | |
| TOTAL | **$500.00** |

# INVOICE

Provision Specialized Resources, LLC
3698 Vernon Drive
Zachary, Louisiana 70791
(225) 405-1926

DATE: DECEMBER 3, 2024
INVOICE # LMQ-51

TO City of La Marque, TX
Public Works

Public Works- Streets
Fleming Road Bridge DOT

| HOURS | DESCRIPTION | UNIT PRICE | LINE TOTAL |
|---|---|---|---|
| | Application | | $1,500.00 |
| | | | |
| | | | |
| | | | |
| | | | |
| | | SUBTOTAL | $1,500.00 |
| | | SALES TAX | |
| | | TOTAL | **$1,500.00** |

| Invoice # LMQ-51 | Task | Hours Worked | Cost Per Hour | Total Cost |
|---|---|---|---|---|
| | Training/Webinars | 1 | $50.00 | N/C |
| | Task Breakdown | 1 | $75.00 | $75.00 |
| | Initial Documentation Request to City Contact | 1 | $25.00 | N/C |
| | Agenda/Resolution | 1 | $50.00 | $50.00 |
| | Database Registration | 1 | $25.00 | N/C |
| | Data & Research | 2 | $125.00 | $250.00 |
| | Standard Forms | 1 | $75.00 | $75.00 |
| | Letters of Recommendation | 2 | $75.00 | $150.00 |
| | Identify Stakeholders/Community Partners | 0 | $50.00 | $0.00 |
| | Stakeholders/Community Communication | 0 | $50.00 | $0.00 |
| | Technical Writing | 2 | $175.00 | $350.00 |
| | Statistic Backup Research/Writing | 2 | $125.00 | $250.00 |
| | Communication w/City | 5 | $50.00 | N/C |
| | Engineering Request | 10 | $25.00 | N/C |
| | Data/Statistics/Mapping/Pictures/Timeline | 0 | $95.00 | $0.00 |
| | Quotes | 2 | $50.00 | $100.00 |
| | Budget Development | 0 | $125.00 | $0.00 |
| | Report Building | 0 | $125.00 | $0.00 |
| | Attachment/Documentation Collection from Assigned City Contact | 0 | $90.00 | $0.00 |
| | Final Check Off | 0.5 | $75.00 | $37.50 |
| | Final Submission | 1 | $125.00 | $125.00 |
| | Follow-Up | 0.5 | $75.00 | $37.50 |
| | **TOTAL:** | 33 | | $1,500.00 |

# INVOICE

Provision Specialized Resources, LLC
3698 Vernon Drive
Zachary, Louisiana 70791
(225) 405-1926

DATE: SEPTEMBER 6, 2024
INVOICE # LMQ-35

TO City of La Marque, Tx
Utilities Department

UTILITIES
SS4A Streetlight Addition

| HOURS | DESCRIPTION | UNIT PRICE | LINE TOTAL |
|---|---|---|---|
| | SS4A Grant Application | | $7,500.00 |
| | Request for Additional Information-1 | | $250.00 |
| | Request for Additional Information-2 | | $250.00 |
| | Request for Additional Information-3 | | $250.00 |
| | | | |
| | | | |
| | | | |
| | | SUBTOTAL | $8,250.00 |
| | | SALES TAX | |
| | | TOTAL | **$8,250.00** |

| Invoice # LMQ-35 | Task | Hours Worked | Cost Per Hour | Total Cost |
|---|---|---|---|---|
| | Training/Webinars | 3 | $50.00 | $148.88 |
| | Task Breakdown | 3 | $75.00 | N/C |
| | Initial Documentation Request to City Contact | 1 | $25.00 | N/C |
| | Agenda/Resolution | 1 | $75.00 | N/C |
| | Database Registration | 1 | $25.00 | N/C |
| | Data & Research | 7 | $125.00 | $812.50 |
| | Standard Forms | 3 | $75.00 | $225.00 |
| | Letters of Recommendation | 3 | $75.00 | $225.00 |
| | Identify Stakeholders/Community Partners | 3 | $50.00 | N/C |
| | Stakeholders/Community Communication | 3 | $50.00 | N/C |
| | Technical Writing | 12 | $175.00 | $2,100.00 |
| | Statistic Backup Research/Reporting | 8 | $125.00 | $1,031.25 |
| | Communication w/City | 3 | $50.00 | N/C |
| | Engineering Request | 2 | $50.00 | N/C |
| | Mapping/Pictures/Timeline | 6 | $95.00 | $570.00 |
| | Quotes | 3 | $50.00 | N/C |
| | Budget Development | 5 | $125.00 | $625.00 |
| | Report Building | 4 | $125.00 | $500.00 |
| | Attachment/Documentation Collection from Assigned City | 5 | $90.00 | N/C |
| | Final Check Off | 4 | $75.00 | $334.99 |
| | Final Submission | 8 | $125.00 | $937.50 |
| | Follow-Up/RFI | 10 | $75.00 | $750.00 |
| | **TOTAL:** | | | $8,250.00 |

# INVOICE

Provision Specialized Resources, LLC
3698 Vernon Drive
Zachary, Louisiana 70791
(225) 405-1926

DATE: DECEMBER 3, 2024
INVOICE # LMQ-50

TO City of La Marque, TX
PARKS

Coca-Cola Recycling Grant

| HOURS | DESCRIPTION | UNIT PRICE | LINE TOTAL |
|---|---|---|---|
| | Application | $100.00 | $500.00 |
| | | | |
| | | | |
| | | | |
| | | | |

| | |
|---|---|
| SUBTOTAL | $500.00 |
| SALES TAX | |
| TOTAL | **$500.00** |

| Invoice # LMQ-50 | Task | Hours Worked | Cost Per Hour | Total Cost |
|---|---|---|---|---|
| | Training/Webinars | | $50.00 | $0.00 |
| | Task Breakdown | | $75.00 | $0.00 |
| | Initial Documentation Request to City Contact | | $25.00 | $0.00 |
| | Agenda/Resolution | 1 | $50.00 | $50.00 |
| | Database Registration | | $25.00 | $0.00 |
| | Data & Research | | $125.00 | $0.00 |
| | Standard Forms | | $75.00 | $0.00 |
| | Letters of Recommendation | | $75.00 | $0.00 |
| | Identify Stakeholders/Community Partners | | $50.00 | $0.00 |
| | Stakeholders/Community Communication | | $50.00 | $0.00 |
| | Technical Writing | 2 | $175.00 | $350.00 |
| | Statistic Backup Research/Writing | | $125.00 | $0.00 |
| | Communication w/City | | $50.00 | $0.00 |
| | Engineering Request | | $25.00 | $0.00 |
| | Data/Statistics/Mapping/Pictures/Timeline | | $95.00 | $0.00 |
| | Quotes | | $50.00 | $0.00 |
| | Budget Development | 0.8 | $125.00 | $100.00 |
| | Report Building | | $125.00 | $0.00 |
| | Attachment/Documentation Collection from Assigned City Contact | | $90.00 | $0.00 |
| | Final Check Off | | $75.00 | $0.00 |
| | Final Submission | | $125.00 | $0.00 |
| | Follow-Up | | $75.00 | $0.00 |
| | **TOTAL:** | 3.8 | | $500.00 |

# INVOICE

Provision Specialized Resources, LLC
3698 Vernon Drive
Zachary, Louisiana 70791
(225) 405-1926

DATE: SEPTEMBER 24, 2024
INVOICE # LMQ-47

TO City of La Marque, Tx

PARKS-CIP
TPWD Mahan Park Walking Trails

| HOURS | DESCRIPTION | UNIT PRICE | LINE TOTAL |
|---|---|---|---|
| | TPWD Mahan Park Walking Trails | | $6,354.25 |
| | (NO CHARGE) | | |
| | | | |
| | | | |
| | | | |

| | |
|---|---|
| SUBTOTAL | $0.00 |
| SALES TAX | |
| TOTAL | **$0.00** |

| LMQ-47 | Task | Hours Worked | Cost Per Hour | Total Cost |
|---|---|---|---|---|
| Mahan Park Walking Trails | Training/Webinars | 3.66 | $50.00 | $183.00 |
| | Task Breakdown | 2 | $75.00 | $150.00 |
| | Initial Documentation Request to City Contact | 7.15 | $25.00 | $178.75 |
| | Agenda/Resolution | 3 | $50.00 | $150.00 |
| | Database Registration | 2 | $25.00 | $50.00 |
| | Data & Research | 11 | $75.00 | $825.00 |
| | Standard Forms | 3 | $75.00 | $225.00 |
| | Letters of Recommendation | 2 | $50.00 | $100.00 |
| | Identify Stakeholders/Community Partners | 2 | $50.00 | $100.00 |
| | Stakeholders/Community Communication | 2 | $50.00 | $100.00 |
| | Technical Writing | 8 | $175.00 | $1,400.00 |
| | Statistic Backup Research/Writing | 5 | $125.00 | $625.00 |
| | Communication w/City | 6 | $25.00 | $150.00 |
| | Engineering Request | 0 | $25.00 | $0.00 |
| | Data/Statistics/Mapping/Pictures | 2 | $95.00 | $190.00 |
| | Timeline/Budget/Quotes | 2 | $90.00 | $180.00 |
| | Report Building | 3 | $125.00 | $375.00 |
| | Attachment/Documentation Collection from Assigned City Contact | 4 | $90.00 | $360.00 |
| | Final Check Off | 3 | $75.00 | $225.00 |
| | Final Submission | 6 | $125.00 | $750.00 |
| | Follow-Up | 0.5 | $75.00 | $37.50 |
| | **TOTAL:** | 77.31 | | $6,354.25 |

# INVOICE

Provision Specialized Resources, LLC
3698 Vernon Drive
Zachary, Louisiana 70791
(225) 405-1926

DATE: SEPTEMBER 9, 2024
INVOICE # LMQ-49

TO City of La Marque, Tx
Police Department
Attn: Chief Randall Aragon

POLICE
H-GAC Justice Grant

| HOURS | DESCRIPTION | UNIT PRICE | LINE TOTAL |
|---|---|---|---|
| 42.35 | H-GAC Justice Grant Application | | $3,553.10 |
| | (NO CHARGE) | | |
| | | | |
| | | | |
| | | | |

| | |
|---|---|
| SUBTOTAL | $0.00 |
| SALES TAX | |
| TOTAL | **$0.00** |

# INVOICE

Provision Specialized Resources, LLC
3698 Vernon Drive
Zachary, Louisiana 70791
(225) 405-1926

DATE: SEPTEMBER 24, 2024
INVOICE # LMQ-48

TO City of La Marque, Tx

PARKS-CIP
TxGLO GOMESA Grant Application

| HOURS | DESCRIPTION | UNIT PRICE | LINE TOTAL |
|---|---|---|---|
| | TxGLO GOMESA Highland Bayou Park Plan | | $6,500.00 |
| | | | |
| | | | |
| | | | |
| | | | |
| | | SUBTOTAL | $6,500.00 |
| | | SALES TAX | |
| | | TOTAL | **$6,500.00** |

| Invoice# LMQ-48 | Task | Hours Worked | Cost Per Hour | Total Cost |
|---|---|---|---|---|
| | Training/Webinars | 4 | $50.00 | $200.00 |
| | Task Breakdown | 2 | $75.00 | $150.00 |
| | Initial Documentation Request to City Contact | 7 | $25.00 | $175.00 |
| | Agenda/Resolution | 2 | $50.00 | $100.00 |
| | Database Registration | 2.5 | $25.00 | $62.50 |
| | Data & Research | 11 | $75.00 | $825.00 |
| | Standard Forms | 3 | $75.00 | $225.00 |
| | Letters of Recommendation | 2 | $50.00 | $100.00 |
| | Identify Stakeholders/Community Partners | 2 | $50.00 | $100.00 |
| | Stakeholders/Community Communication | 3 | $50.00 | $150.00 |
| | Technical Writing | 9 | $175.00 | $1,575.00 |
| | Statistic Backup Research/Writing | 4.25 | $125.00 | $531.25 |
| | Communication w/City | 6 | $25.00 | N/C |
| | Engineering Request | 10 | $75.00 | N/C |
| | Data/Statistics/Mapping/Pictures | 4 | $95.00 | $380.00 |
| | Timeline/Budget/Quotes | 3 | $90.00 | $270.00 |
| | Report Building | 3 | $125.00 | $375.00 |
| | Collection from Assigned City Contact | 4 | $90.00 | $360.00 |
| | Final Check Off | 3 | $75.00 | $225.00 |
| | Final Submission | 5 | $125.00 | $625.00 |
| | Follow-Up | 1 | $75.00 | $75.00 |
| | **TOTAL:** | 90.75 | | $6,500.00 |

# INVOICE

Provision Specialized Resources, LLC
3698 Vernon Drive
Zachary, Louisiana 70791
(225) 405-1926

DATE: SEPTEMBER 24, 2024
INVOICE # LMQ-46

TO City of La Marque, Tx

PARKS-CIP
H-GAC Natural Parks Award

| HOURS | DESCRIPTION | UNIT PRICE | LINE TOTAL |
|---|---|---|---|
| | H-GAC Natural Parks Award (Planning) | | $250.00 |
| | H-GAC Natural Parks Award (Planning) | | $250.00 |
| | H-GAC Natural Parks Award (Planning) | | $250.00 |
| | | | |
| | | | |
| | | SUBTOTAL | $700.00 |
| | | SALES TAX | |
| | | TOTAL | **$700.00** |

| Invoice# LMQ-46 | Task | Hours Worked | Cost Per Hour | Total Cost |
|---|---|---|---|---|
| | Training/Webinars | 0 | $50.00 | $0.00 |
| | Task Breakdown | 1 | $75.00 | N/C |
| | Initial Documentation Request to City Contact | 1 | $25.00 | N/C |
| | Agenda/Resolution | 1 | $75.00 | N/C |
| | Database Registration | 0 | $25.00 | N/C |
| | Data & Research | 0 | $125.00 | $0.00 |
| | Standard Forms | 0 | $75.00 | $0.00 |
| | Letters of Recommendation | 2 | $75.00 | N/C |
| | Identify Stakeholders/Community Partners | 1 | $50.00 | N/C |
| | Stakeholders/Community Communication | 1 | $50.00 | $50.00 |
| | Technical Writing | 2 | $175.00 | $350.00 |
| | Statistic Backup Research/Reporting | | $125.00 | $0.00 |
| | Communication w/City | 1 | $50.00 | $50.00 |
| | Engineering Request | 0 | $50.00 | $0.00 |
| | Mapping/Pictures/Timeline | 1 | $95.00 | N/C |
| | Quotes | 2 | $50.00 | $100.00 |
| | Budget Development | 0 | $125.00 | $0.00 |
| | Report Building | 0 | $125.00 | $0.00 |
| | Attachment/Documentation Collection from Assigned City Contact | 1 | $90.00 | N/C |
| | Final Check Off | 1 | $75.00 | $75.00 |
| | Final Submission | 1 | $125.00 | $125.00 |
| | Follow-Up/RFI | 3 | $75.00 | N/C |
| | **TOTAL:** | 15 | | $750.00 |

# City of La Marque

# General Land Office Public Infrastructure Projects Update

# February 20, 2025

# La Marque C287 – Westlawn Drainage - $1,447,527.00

Project Site

Drainage Improvements



# La Marque C287 – Westlawn Drainage - $1,447,527.00

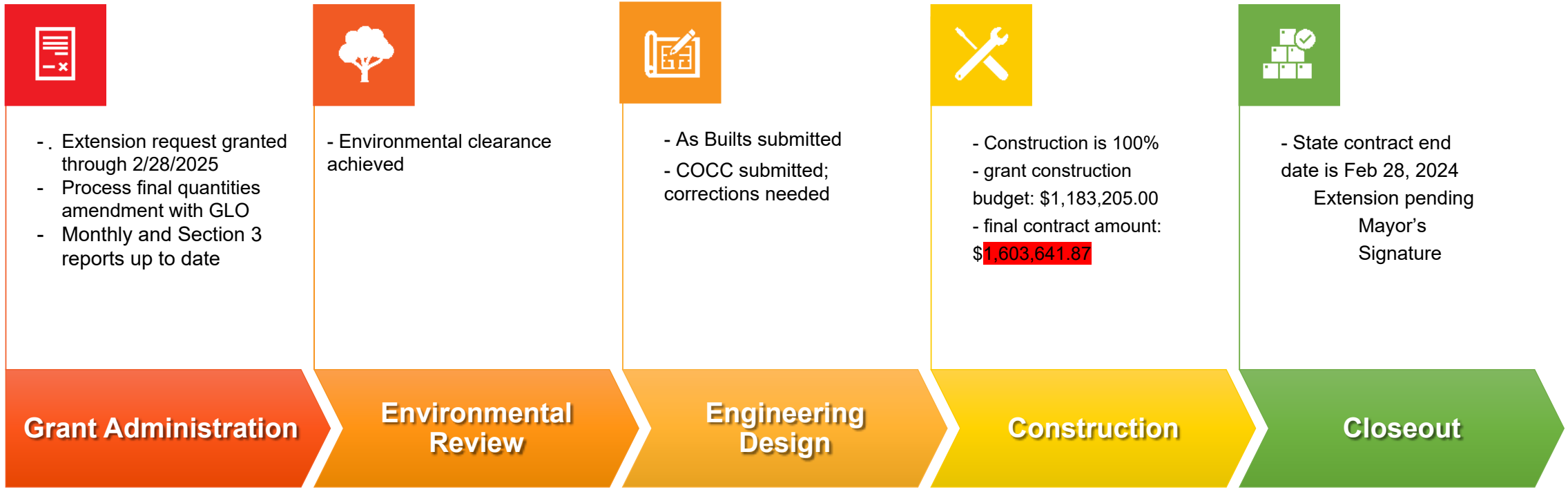

# Action Items

- Closeout Amendment
  - Budget memo sent to City; Mayor's signature needed
  - DocuSign extension out for Mayor; Signature needed before 2/28/2025
- Monitoring
  - Initial monitoring complete
  - Current phase: waiting on final report
  - Administrative extension out in DocuSign
- Outstanding invoices
  - Final Pay App for contractor
    - Pay App #3 to be submitted today
    - Pay App #4 to City by end of week
    - The COCC is needs to be updated to reflect Change Orders
  - Engineering Invoice has been submitted to GLO

# La Marque D208 – Sewer & Manholes - $7,493,145.00

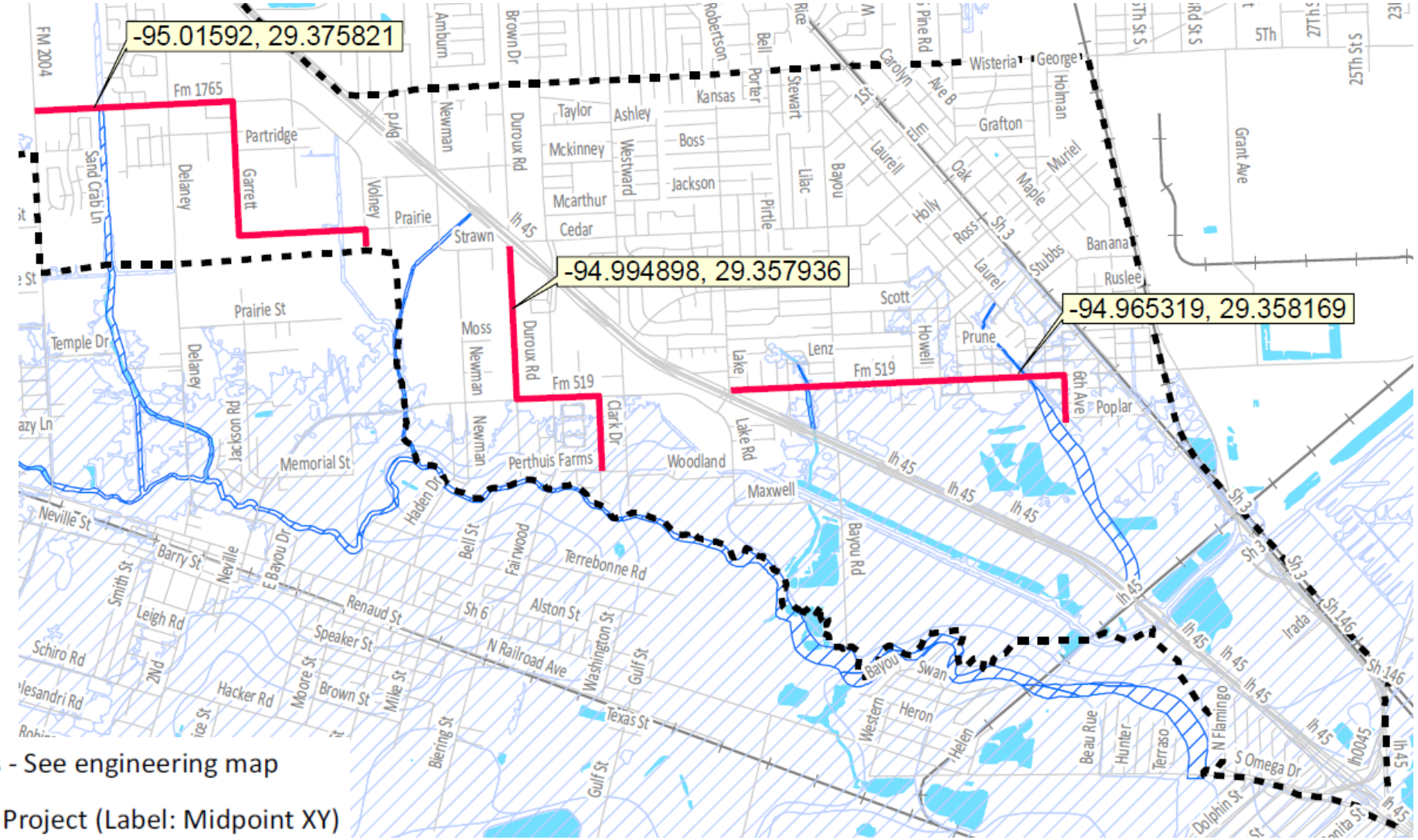

# La Marque D208 – Sewer & Manholes - $7,493,145.00

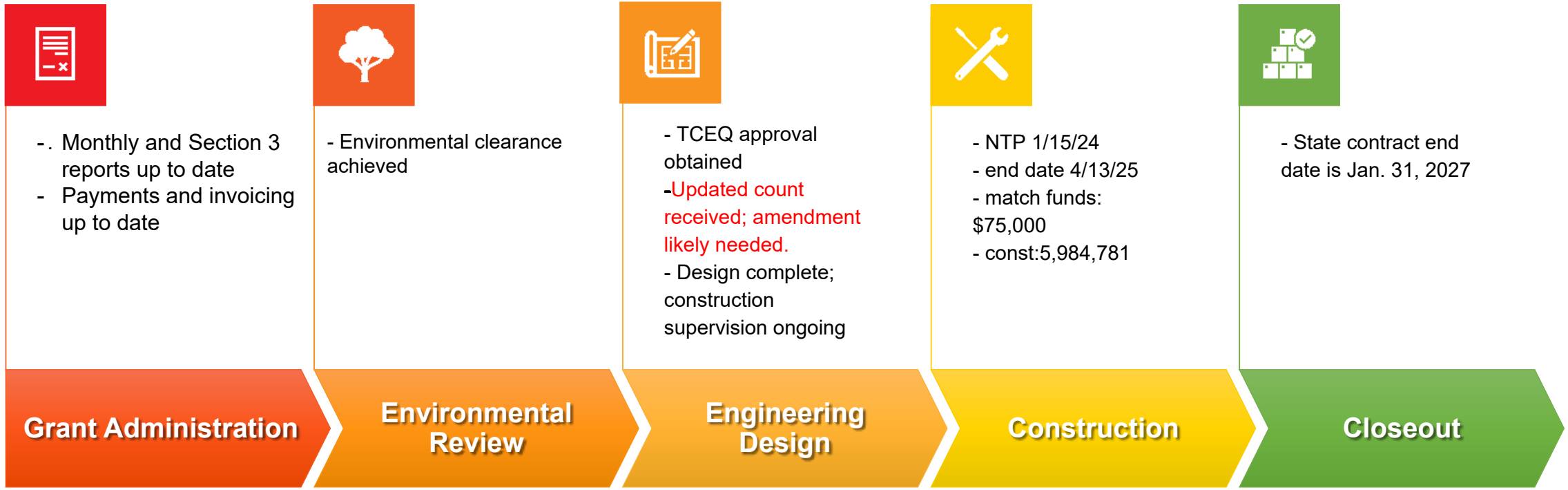

# Action Items

- Project Update from Engineer
- GW Labor Updates
- Extension Request with GLO Update – Executed!
- Pay Apps & Invoicing
  - Pay App #9: Draw with the City for signatures
- Change Orders
  - #1-5 submitted to GLO
  - #6 & 7 pending
- Paying matching funds - $75,000.00
  - Contribute next Pay App?

# La Marque D223 – WWTP & Lift Stations – $48,904,004.00

- Lift Station (Label: Midpoint XY)
- WWTP (Label: Midpoint XY)

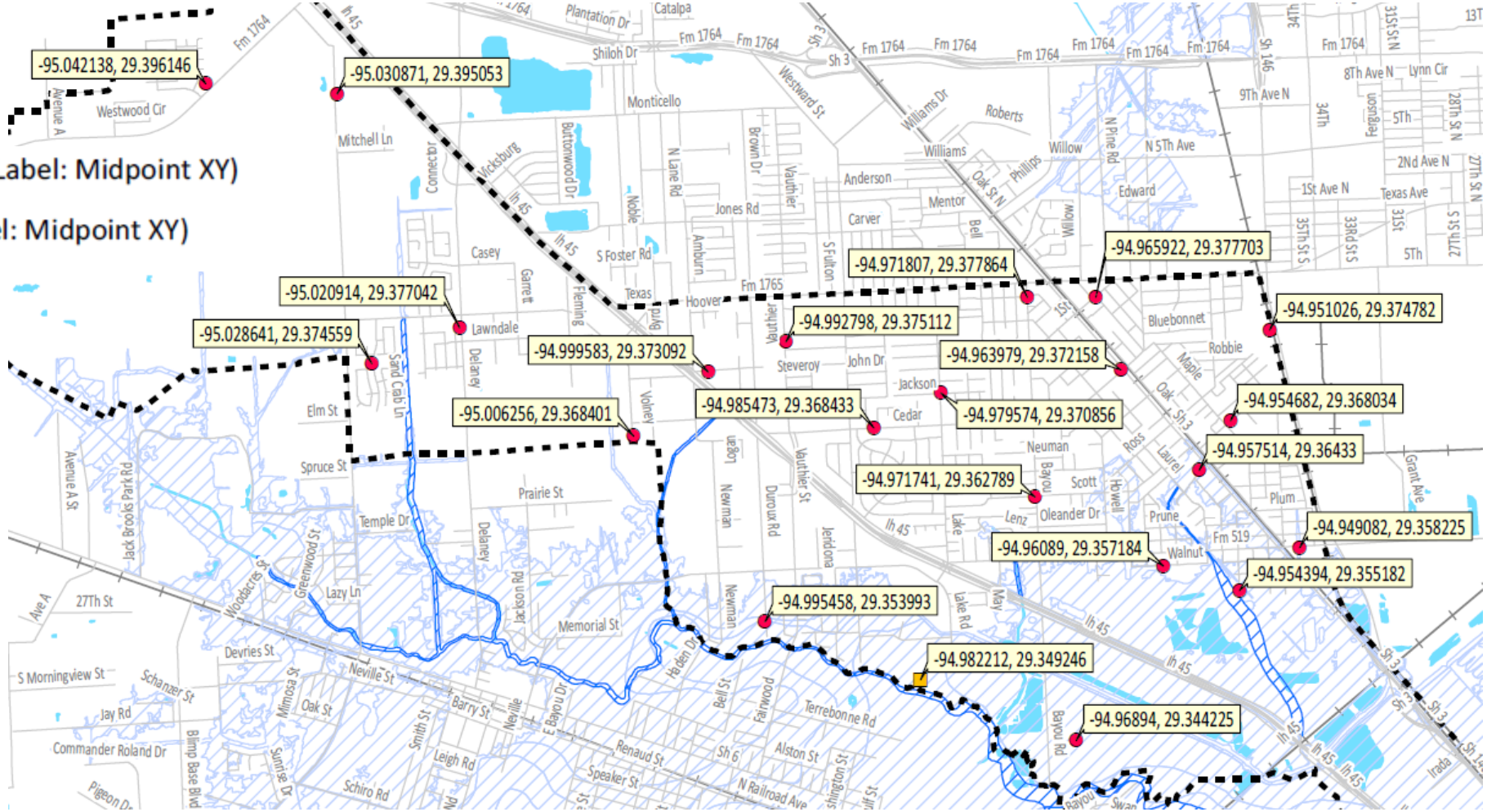

# La Marque D223 – Priority Lift Stations – $3,415,217.40

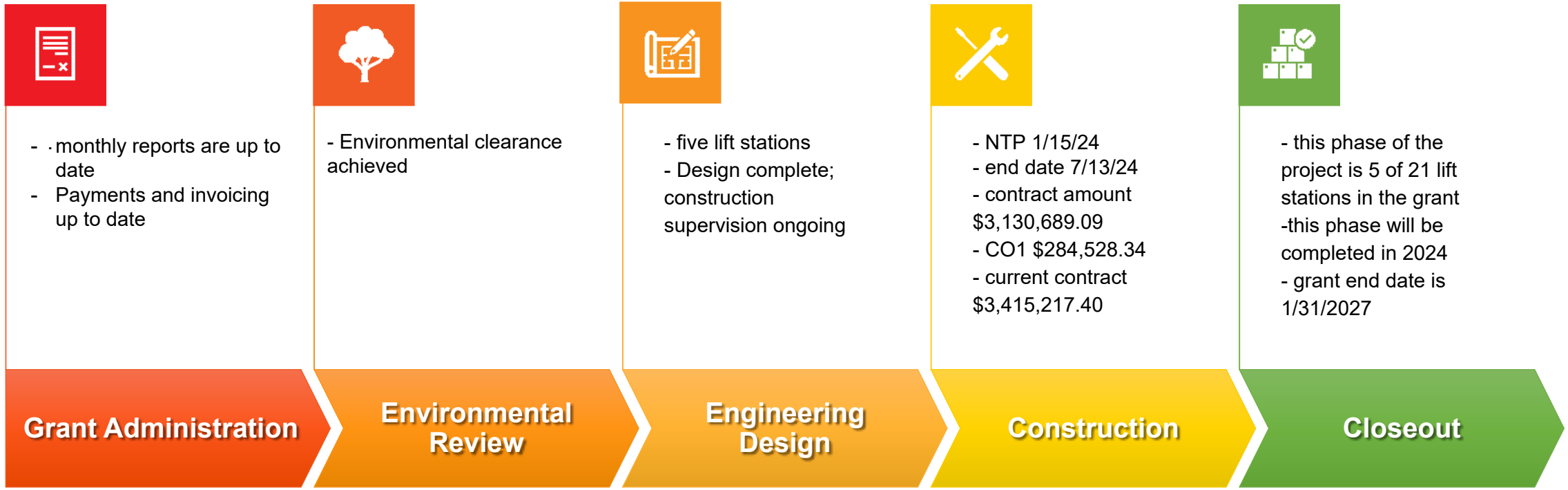

# La Marque D223 – Wastewater Treatment Plant – $48,904,004.00

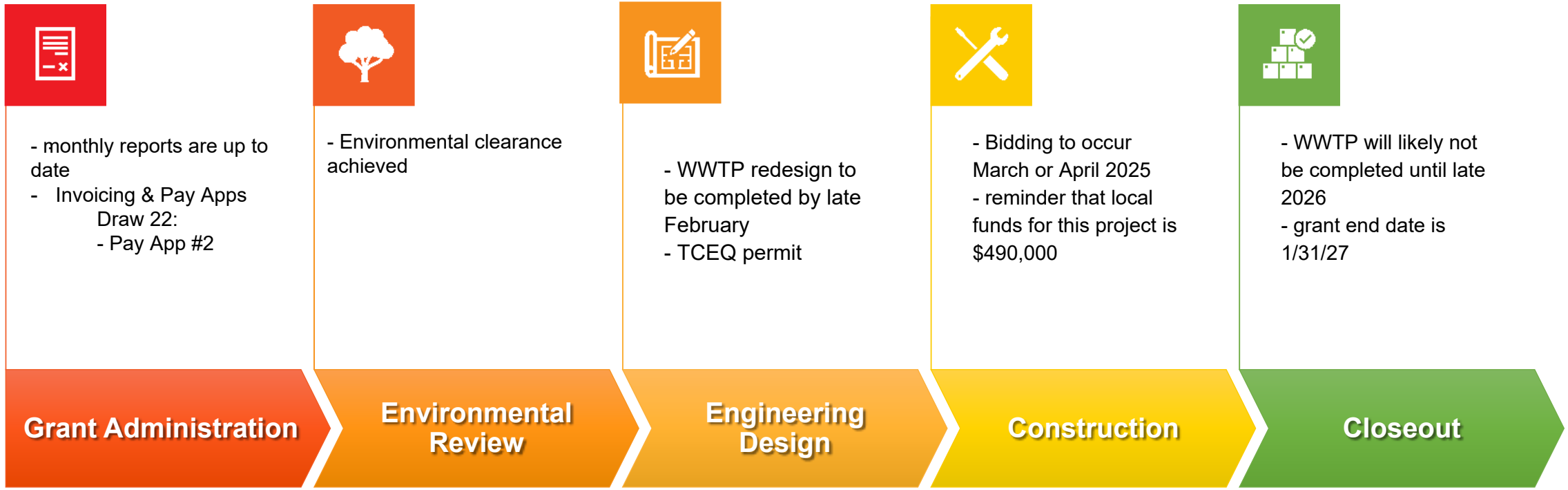

# Action Items

- Project Update from Engineer
  - Lift Stations
  - WWTP
- GW Labor Updates
- Pay Apps & Invoicing
  - Pay App #2: to be submitted today
  - Pay App #3 received and being processed
- Change Orders
  - CO #3 received
- Paying matching funds - $490,000.00
  - Contribute next Pay App?

# La Marque Public Library
## January 2025

### Money Saved
$5,602.00

### Visitors
1,348

### Computers
Users - 275
Time - 254hrs.

### Circulation
773 items

Programs - 24 Attendance - 127

### New Items
197 added

### New Accounts
23 cards

### Inter-Library Loans
29 items

### Digital Circulation
252 items

# La Marque Public Library
## January 2025 YTD Comparisons

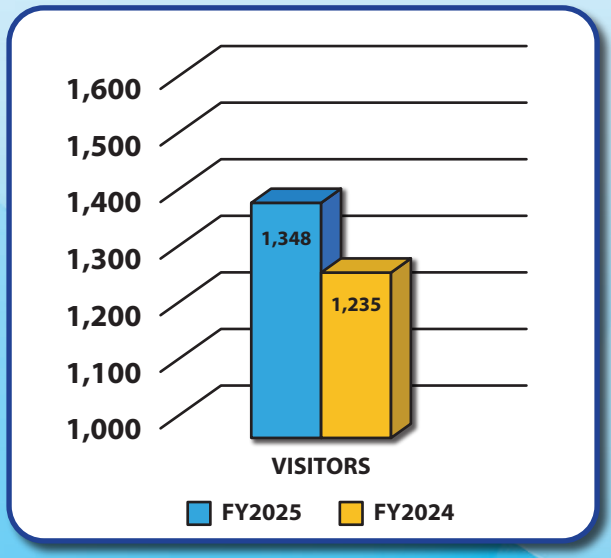


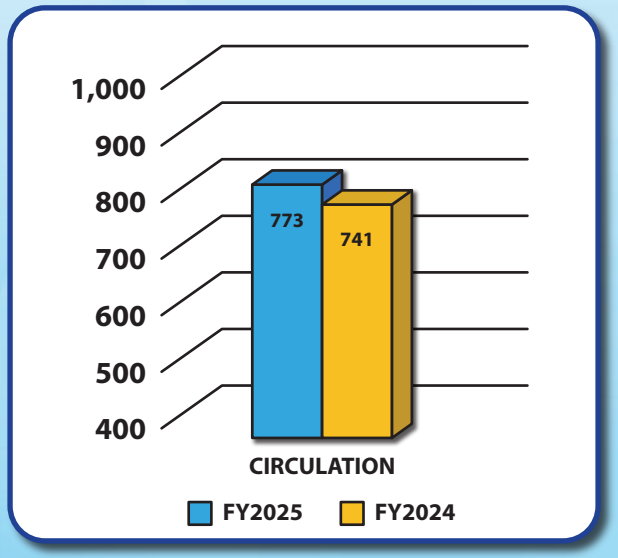


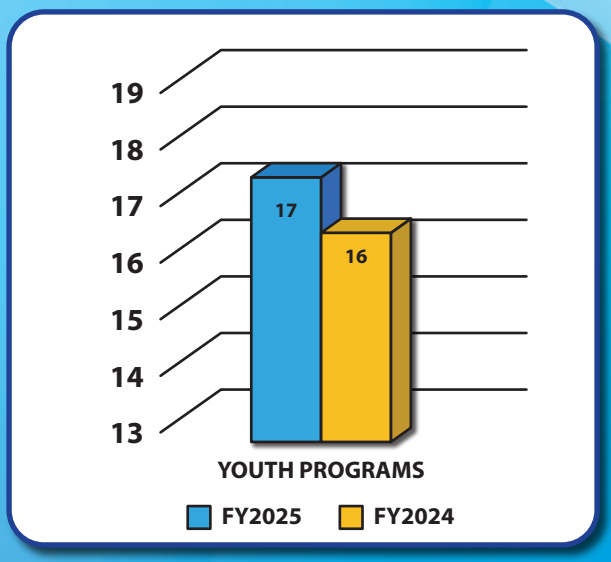


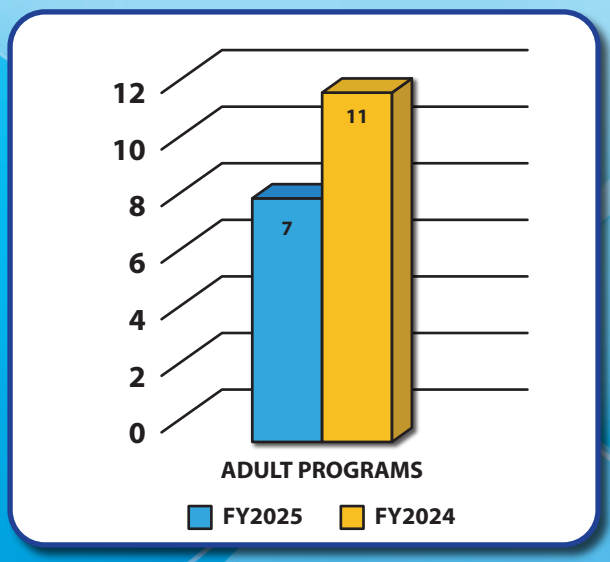


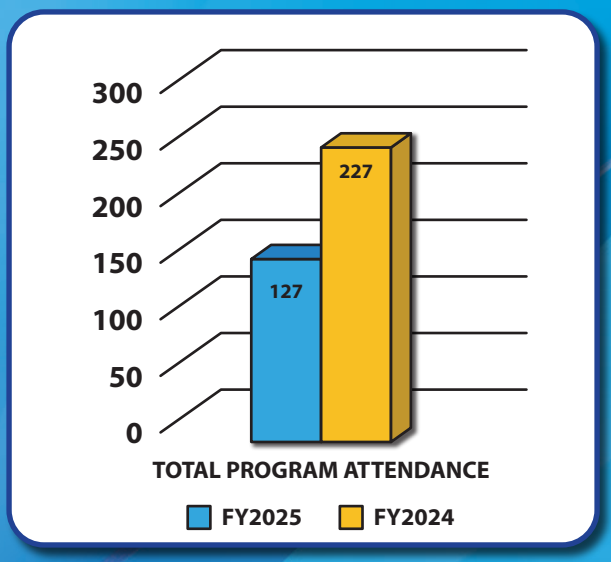


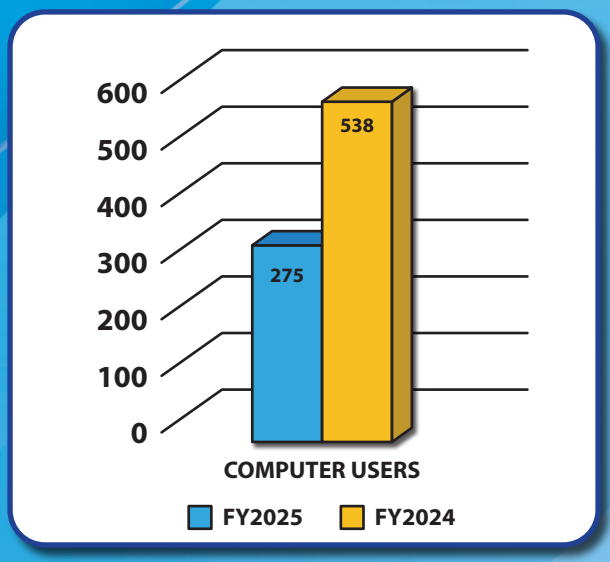

# General Fund

# Utility Fund

# Sanitation Fund

# January 2025 Preliminary Results

# (Unaudited)

# January 2025 Financial Report (Unaudited)

The following is a summary of the financial results for the City's general and utility/sanitation funds. Please refer to the budget vs actual reports for the general and utility/sanitation funds. The fiscal year 2025 year-to-date actuals are compared as a percentage of the annual budget on a modified accrual basis. The amounts presented have not yet been audited by our external auditors for the fiscal year 2024-2025.

Percent of fiscal year Complete: 33%

The general ledger only reflects payments the City has posted to respective funds which may include collections as well as penalties and interest from prior years. The general ledger may reflect a timing difference between the reported collections by the Tax Assessor and the receipt and posting of funds by the City.

## General Fund

### General Fund Revenue Snapshot

| | FY24 Collections | FY25 Collections |
|---|---|---|
| Property Tax | 4,121,581 | 4,312,252 |
| Sales Tax | 759,216 | 959,647 |
| | | |
| **Property Tax:** Penalties and delinquencies are still being collected from the previous tax year. | | |
| **Sales Tax**: Sales tax collections will begin to reflect in December 2024 because Jan and Feb collections are accrued back to FY24. | | |
| FY24 collections balance was due to an auditor adjusting entry to FY23. The FY25 collections of $16 is the discount at filing. | | |

### General Fund Departmental Expenditure Snapshot

| | FY25 Budget | FY25 Actuals |
|---|---|---|
| Administration | 977,327 | 287,660 |
| Finance | 850,557 | 187,941 |
| Inspection | 660,549 | 101,322 |
| Code Compliance | 677,816 | 146,641 |
| Judicial | 426,202 | 147,114 |
| City Clerk | 359,040 | 109,974 |
| Library | 352,654 | 114,307 |
| Information Technology | 732,790 | 262,204 |
| Police | 6,500,128 | 2,591,872.07 |
| Animal Control | 133,500 | 33,415.95 |
| Emergency Mgmt | 19,286 | 304.21 |
| Fire/EMS | 4,842,369 | 1,735,260.72 |
| Parks | 329,741 | 82,184.14 |
| Shop | 206,075 | 51,555.17 |
| Public Services | 1,099,394 | 324,921.64 |
| Fund Expenditures | 2,518,176 | 1,173,140.88 |

# Detailed Budget vs. Actual- General Fund

**City of La Marque**
**Budget vs. Actual**
**As of January 2025**
(Unaudited)

| | Budget | January FY25 | January FY24 | YTD FY25 | YTD FY24 | Remaining | Benchmark 33% |
|---|---|---|---|---|---|---|---|
| **General Fund** | | | | | | | |
| **Revenues:** | | | | | | | |
| Property Taxes | 6,294,322 | 1,657,176 | 3,039,006 | 4,312,252 | 4,121,581 | 1,982,070 | 69% |
| Sales Tax | 5,967,355 | 441,023 | 417,074 | 959,647 | 759,216 | 5,448,731 | 16% |
| Franchise Tax | 974,575 | 146,210 | 145,826 | 146,210 | 145,880 | 974,575 | 15% |
| Other Taxes | 108,000 | 19,396 | 3,217 | 25,719 | 9,903 | 101,677 | 24% |
| Licenses and Permits | 3,368,205 | 663,575 | 649,027 | 919,481 | 1,090,115 | 2,448,724 | 27% |
| Fines and Forfeits | 651,962 | 67,189 | 32,670 | 252,451 | 124,958 | 399,511 | 39% |
| Charges for Services | 12,869 | 937 | 1,177 | 4,099 | 4,279 | 8,770 | 32% |
| Fire and Ambulance Services | 985,000 | 152,568 | 32,465 | 438,026 | 188,477 | 546,974 | 44% |
| Investment Earnings | 372,982 | 18,289 | 21,686 | 58,006 | 96,315 | 314,976 | 16% |
| Misc Revenues | 407,414 | 23,506 | 6,598 | 112,931 | 91,958 | 294,483 | 28% |
| Transfers In | 1,544,582 | - | - | - | - | 1,544,582 | 0% |
| **General Fund - Total Revenues** | **20,687,266** | **3,189,870** | **4,348,745** | **7,228,823** | **6,632,682** | **14,065,072** | **35%** |

| | Budget | January FY25 | January FY24 | YTD FY25 | YTD FY24 | Remaining | Benchmark 33% |
|---|---|---|---|---|---|---|---|
| **Expenditures:** | | | | | | | |
| **General Government Division** | | | | | | | |
| City Manager | 714,208 | 46,511 | 28,080 | 227,241 | 109,070 | 486,968 | 32% |
| City Council | 78,250 | 317 | 1,712 | 4,869 | 14,553 | 73,381 | 6% |
| HR | 184,869 | 9,441 | 24,601 | 55,550 | 76,449 | 129,319 | 30% |
| ***Total Administration*** | 977,327 | 56,270 | 54,393 | 287,660 | 200,071 | 689,668 | 29% |
| | | | | | | | |
| Finance | 666,607 | 40,542 | 29,760 | 181,566 | 136,355 | 485,041 | 27% |
| Independent Audit Fees | 109,500 | - | - | 6,375 | (39,006) | 103,125 | 6% |
| Tax Assesor Fees | 5,000 | - | - | - | - | 5,000 | 0% |
| GC Appraisal Dist Fees | 69,450 | - | 56,902 | - | 56,902 | 69,450 | 0% |
| ***Total Finance/Acctg/Tax*** | 850,557 | 40,542 | 86,661 | 187,941 | 154,251 | 662,616 | 22% |
| | | | | | | | |
| Inspection | 660,549 | 52,116 | 68,223 | 101,322 | 187,843 | 559,227 | 15% |
| Code Compliance | 677,816 | 34,436 | 25,943 | 146,641 | 101,918 | 531,175 | 22% |
| Judicial | 426,202 | 51,413 | 35,066 | 147,114 | 133,540 | 279,088 | 35% |
| City Clerk | 359,040 | 17,971 | 12,578 | 109,974 | 42,880 | 249,066 | 31% |
| Library | 352,654 | 26,606 | 24,861 | 114,307 | 99,608 | 238,347 | 32% |
| Information Technology | 732,790 | 41,736 | 35,654 | 262,204 | 151,971 | 470,586 | 36% |
| ***Fund Expenditures*** | 3,209,051 | 224,277 | 202,326 | 881,563 | 717,761 | 2,327,488 | 27% |

| | Budget | January FY25 | January FY24 | YTD FY25 | YTD FY24 | Remaining | Benchmark 33% |
|---|---|---|---|---|---|---|---|
| **Public Safety Division** | | | | | | | |
| Police | 6,500,128 | 586,422 | 487,203 | 2,591,872 | 1,928,949 | 3,908,256 | 40% |
| Animal Control | 133,500 | - | 31,384 | 33,416 | 31,384 | 100,084 | 25% |
| Emergency Management | 19,286 | - | - | 304 | 4,828 | 18,982 | 2% |
| Fire/EMS | 4,842,369 | 422,232 | 382,255 | 1,735,261 | 1,553,620 | 3,107,108 | 36% |
| ***Total PSD Expenditures*** | 11,495,283 | 1,008,653 | 900,842 | 4,360,853 | 3,518,782 | 7,134,430 | 38% |

| | Budget | January FY25 | January FY24 | YTD FY25 | YTD FY24 | Remaining | Benchmark 33% |
|---|---|---|---|---|---|---|---|
| **Public Works Division** | | | | | | | |
| Parks | 329,741 | 23,419 | 11,416 | 82,184 | 63,928 | 247,557 | 25% |
| Shop | 206,075 | 11,429 | 15,267 | 51,555 | 73,417 | 154,520 | 25% |
| Public Services | 1,099,394 | 95,770 | 96,474 | 324,922 | 335,520 | 774,472 | 30% |
| ***Total PWD Expenditures*** | 1,635,210 | 130,618 | 123,157 | 458,661 | 472,865 | 1,176,549 | 28% |
| | | | | | | | |
| ***Fund Expenditures (Fund 99)*** | 2,518,176 | 369,719 | 300,960 | 1,173,141 | 1,112,882 | 1,345,035 | 47% |
| | | | | | | | |
| **General Fund - Total Expenditures** | **20,685,605** | **1,830,079** | **1,668,339** | **7,349,819** | **6,176,612** | **13,335,786** | **36%** |
| | | | | | | | |
| **Revenues over Expenditures** | 1,661 | 1,359,791 | 2,680,406 | (120,996) | 456,070 | 729,286 | -7284% |

**General Fund Revenues**

**Property Taxes**

- $1.66 million collected in January FY25, which is 69% of the benchmark for the year.
- YTD Comparison: $4.31 million in FY25 compared to $4.12 million in FY24.
- Property taxes are a strong result, with a significant portion of the expected revenue already collected. The revenue from property taxes is in line with expectations, and the YTD comparison shows a slight increase over the previous year, suggesting a stable property tax base.

**Sales Tax**

- Sales tax revenue is overperforming compared to last fiscal year. Achieving only 16% of the target budgeted for the year.
- YTD Comparison: $959K in FY25 vs. $759K in FY24.
- There has been growth in sales tax revenue compared to FY24. The sales tax will be more in line at year due to the first two months of the fiscal year being accrued back to FY24.

**Franchise Tax**

- Franchise tax is performing as expected, reaching 15% of the benchmark.
- YTD Comparison: $146K in FY25 compared to $146K in FY24.
- Franchise tax revenue has remained stable year-over-year. This revenue source is reliable but does not show significant growth or decline. The revenue is predictable and will likely continue to contribute consistently to the General Fund.

**Licenses and Permits**

- Licenses and permits achieved 27% of the annual target in January FY25.
- YTD Comparison: $919K in FY25 vs. $1.09 million in FY24.
- This category is slightly underperforming compared to last year, showing a decline in YTD revenue. This could indicate lower business activity or fewer new licenses and permits being issued. There may be permitting and licensing in the pipeline.

**Fines and Forfeits**

- Fines and forfeits are performing very well, achieving 39% of the benchmark in January.
- YTD Comparison: $252K in FY25 vs. $125K in FY24.
- This category exceeds expectations, showing significant growth over FY24. The increased revenue from fines and forfeits could be attributed to more active enforcement or a higher incidence of violations. Although this revenue is somewhat unpredictable, the positive trend is encouraging and could provide a boost to the General Fund.

**Charges for Services**

- Charges for services have achieved 32% of the benchmark for the year.
- YTD Comparison: $4.1K in FY25 vs. $4.28K in FY24.
- Revenue from charges for services is stable, with no significant change compared to last year. This category is a smaller revenue stream and may not have a large impact on the overall budget, but continued performance at the current level will be necessary for meeting the budget.

**Fire and Ambulance Services**

- Fire and ambulance services are performing well, achieving 44% of the budgeted target in January.
- YTD Comparison: $438K in FY25 vs. $188K in FY24.
- This category shows a strong performance, significantly outpacing FY24. The growth in fire and ambulance service revenues may indicate higher demand for these services or improved billing.

**Investment Earnings**

- Investment earnings are underperforming, reaching only 16% of the benchmark.
- YTD Comparison: $58K in FY25 vs. $96K in FY24.
- Investment earnings have decreased compared to the previous year, likely due to lower interest rates. Given the volatility of this revenue stream, it's important to monitor interest rate trends and adjust investment strategies if necessary.

**Miscellaneous Revenues**

- Miscellaneous revenues have performed well, reaching 28% of the annual target in January.
- YTD Comparison: $113K in FY25 vs. $92K in FY24.
- Miscellaneous revenues exceed expectations and show an increase over FY24. This is due to irregular one-time payments.

**Transfers In**

- No transfers in have been recorded for January FY25.
- Transfers from other funds or sources typically occur later in the fiscal year, so this figure is not a concern at this stage. It is expected that transfers will be received at later points during the year, and this will help meet overall revenue goals.

Overall, the General Fund is in a relatively strong position, with positive performance in key areas like property taxes, fines and forfeits, and fire and ambulance services. However, attention should be given to sales tax, investment earnings, and licenses and permits to ensure these categories meet their full-year targets.

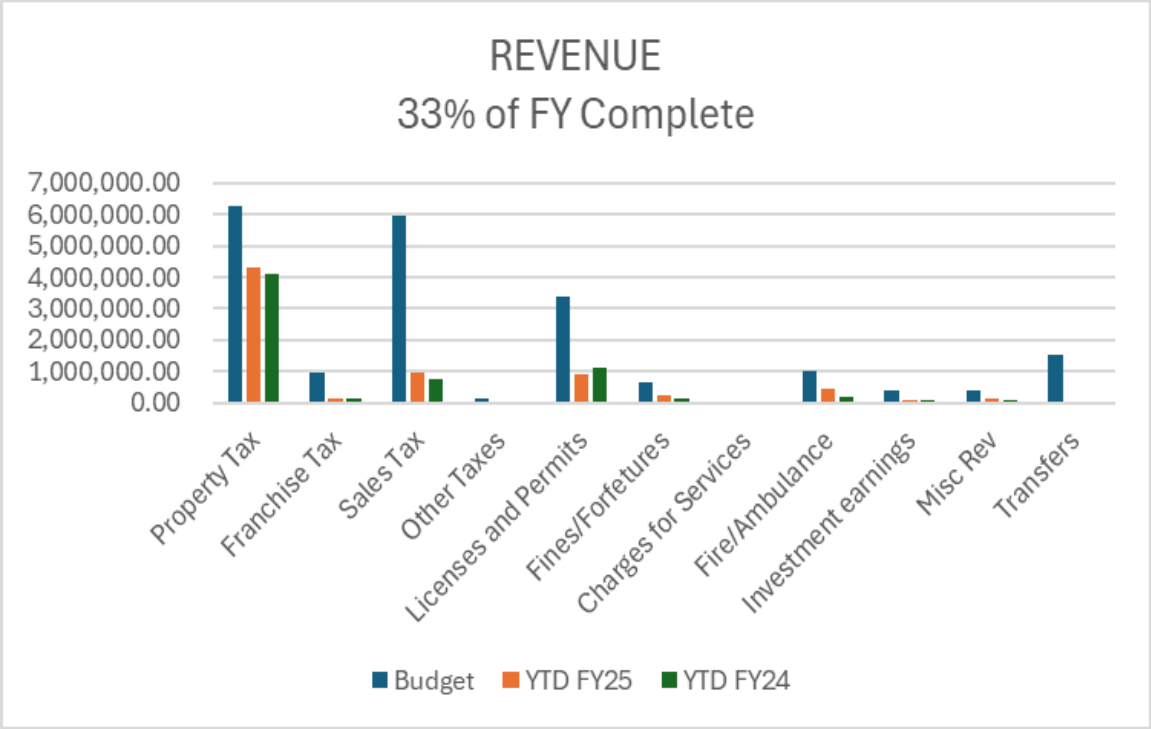


**General Fund Expenditures**

**City Manager**

- YTD Expenditure for FY25: $227,241 (32% of the annual budget)
- The City Manager's office is currently within budget, with a significant portion remaining, indicating that costs are being controlled early in the fiscal year.

**City Council**

- YTD Expenditure for FY25: $4,869 (6% of the annual budget)
- The City Council has spent significantly less than expected, with only 6% of the budget used, leaving a substantial remaining balance.

**Human Resources (HR)**

- YTD Expenditure for FY25: $55,550 (30% of the annual budget)
- HR is slightly above the 33% benchmark, but this can be attributed to the nature of HR's operations, which may require upfront costs at the beginning of the fiscal year.

**Total Administration**

- YTD Expenditure for FY25: $287,660 (29% of the annual budget)
- Administration expenses are under control, staying below the 33% benchmark.

**Finance**

- YTD Expenditure for FY25: $181,566 (27% of the annual budget)
- Finance is on target, remaining well below the 33% benchmark.

**Independent Audit Fees**

- YTD Expenditure for FY25: $6,375 (6% of the annual budget)
- The audit fees are well below budget, due to audits for the last fiscal year have not been completed.

**Tax Assessor Fees**

- Budget for FY25: $5,000
- These fees will be paid later in the fiscal year.

**GC Appraisal District Fees**

- Budget for FY25: $69,450
- These fees will be paid later in the fiscal year.

**Police**

- YTD Expenditure for FY25: $2,591,872 (40% of the annual budget)
- Police expenditure is running above the 33% benchmark, reflecting the high operational costs early in the year, possibly due to seasonal factors or significant early spending needs.

**Animal Control**

- YTD Expenditure for FY25: $33,416 (25% of the annual budget)
- Animal control is well under budget, spending less than expected.

**Emergency Management**

- YTD Expenditure for FY25: $304 (2% of the annual budget)
- Emergency management has reduced spending so far, which may indicate planned expenditure later in the year.

**Fire/EMS**

- YTD Expenditure for FY25: $1,735,261 (36% of the annual budget)
- Fire/EMS expenditure is close to the 33% benchmark, slightly exceeding expectations due to the nature of their operations.

**Parks**

- YTD Expenditure for FY25: $82,184 (25% of the annual budget)
- Parks expenditure is slightly under budget, in line with expectations.

**Shop**

- YTD Expenditure for FY25: $51,555 (25% of the annual budget)
- The shop is operating at a steady pace, with expenditures on target.

**Public Services**

- YTD Expenditure for FY25: $324,922 (30% of the annual budget)
- Public Services are slightly under budget, tracking closely to the expected 33% benchmark.

**Fund Expenditures (Fund 99)**

- YTD Expenditure for FY25: $1,173,141 (47% of the annual budget)
- Fund expenditure exceeds the benchmark, with 47% of the budget already utilized. This could be due to the nature of specific fund-based expenditures that are front-loaded.

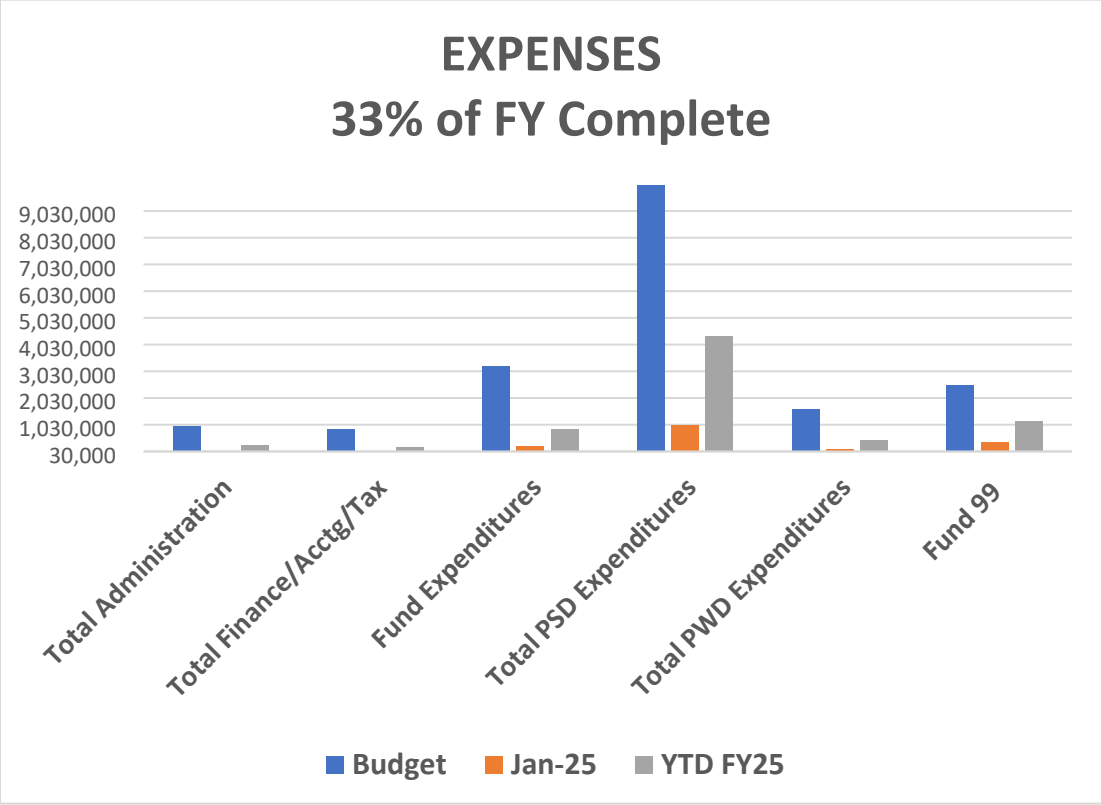

***General Fund departments that are over the 33% threshold include the following:***

Fire/EMS (36%)
Police (40%)
Judicial (35%)
Information Technology (36%)

**Fire/EMS Explanations**

- Pay step raises increase regular payroll.
- Longevity checks issued annually in November (paid out in full for FY25).
- Increase in training certifications resulted in bump in cert pay difficult to predict when certifications hit due to better trained Firefighters.
- Maintain Minimum staffing on Holidays, School coverage, employee on FMLA, multiple special event coverages is what increased overtime.
- Step increases for regular payroll increase tax contributions.
- Increasing payment of overtime increases TMRS contributions.
- Damage to small tools on calls required unexpected purchase of replacements
- Bulk purchase cleaning supplies for both stations.
- Unexpected repairs to ambulance generator for Medic 3
- Annual maintenance due to bulk equipment as well as unexpected stretcher repairs.
- TCFP Fire Officer, Inspector, investigator and advanced EMS certification classes and TCOLE academy.

**Police Explanations**

- Certification increases due to increase in lateral moves of veteran police officers.
- Community policing has increased the need for more cell phone stipends and assignment pay.
- During the budget process, the police requested overtime of $350,000, we were approved for $300,000. Will ask for $400,000 in FY26.
- The increase in officers has increased fuel, uniform, maintenance on the fleet and per diem for travel and training.
- As of FY24, the COPS Grant had drawdowns totaling $183,194.51. This reimbursement is offset against police salaries. No drawdowns have occurred for FY25 as of yet due to federal constraints.

**Information Technology Explanations**

- Regular payroll increased due to hiring an IT Tech and Admin Assistant.
- Phone stipends for additional staff for IT
- Overtime due to Council meetings and City Hall renovations (can come from CO Bond).
- Operating supplies increased due to the replenishment of IT supplies to distribute to other departments.
- Uniforms increased due to the hiring of additional staff.

**Judicial Explanations**

- Longevity checks issued annually in November (paid out in full for FY25)
- Operating Supplies increased due to miscoding invoices. Corrected in Feb 2025.

- Postage costs increased to more mailings.
- Professional fees increased due to payment of annual Tyler Tech Court software for the period 10/24-9/25. Maintenance Fees for Court Software for the period 3/24-9/24.

# Utility Fund

## Utility Fund Revenue Snapshot

| | FY25 Budget | FY25 Actuals |
|---|---|---|
| Water | 4,401,828 | 1,630,275 |
| Sewer | 3,381,264 | 1,054,446 |
| Other Revenue | 1,624,755 | 426,525 |
| Transfers In | 500,000 | 88,994 |

## Utility Fund Department Expenditure Snapshot

| | FY25 Budget | FY25 Actuals |
|---|---|---|
| UB Accounting | 694,846 | 129,833 |
| Utility Line Maintenance | 1,918,199 | 606,361 |
| Water & Sewer Operations | 4,695,626 | 1,406,410 |
| Debt Service | 33,383 | 29,447 |
| Stormwater | 301,022 | 9,907 |
| Fund Expenditures | 2,264,771 | 264,425 |

## Detailed Budget vs. Actual- Utility/Sanitation Fund

| | | January | January | YTD | YTD | | Benchmark |
|---|---|---|---|---|---|---|---|
| | Budget | FY25 | FY24 | FY25 | FY24 | Remaining | 33% |
| **Utility Fund** | | | | | | | |
| **Revenues:** | | | | | | | |
| | | | | | | | |
| Water | 4,401,828 | 547,251 | 318,947 | 1,630,275 | 963,889 | 2,771,553 | 37% |
| Sewer | 3,381,264 | 263,302 | 259,565 | 1,054,446 | 818,017 | 2,326,818 | 31% |
| Other Revenue | 1,624,755 | 137,587 | 307,974 | 426,525 | 629,359 | 1,198,230 | 26% |
| Transfers In | 500,000 | - | - | 88,994 | - | 411,006 | 18% |
| ***Utility Fund - Total Revenues*** | 9,907,847 | 948,140 | 886,487 | 3,200,239 | 2,411,266 | 6,707,608 | 32% |
| | | | | | | | |
| | | January | January | YTD | YTD | | Benchmark |
| | Budget | FY25 | FY24 | FY25 | FY24 | Remaining | 33% |
| **Expenditures:** | | | | | | | |
| UB Accounting | 694,846 | 25,781 | 35,542 | 129,833 | 68,488 | 565,013 | 19% |
| Utility Line Maint | 1,918,199 | 154,352 | 173,623 | 606,361 | 467,395 | 1,311,838 | 32% |
| Water & Sewer Operations | 4,695,626 | 776,760 | 120,388 | 1,406,410 | 503,179 | 3,289,216 | 30% |
| Debt Service | 33,383 | 29,447 | - | 29,447 | 29,447 | 3,936 | 88% |
| Storm Water | 301,022 | 1,708 | 1,950 | 9,907 | 3,340 | 291,115 | 3% |
| Fund Expenditures | 2,264,771 | 21,346 | 25,460 | 264,425 | 286,556 | 2,000,346 | 12% |
| ***Utility Fund - Total Expenditures*** | 9,907,847 | 1,009,392 | 356,964 | 2,446,383 | 1,358,405 | 7,461,464 | 25% |
| | | | | | | | |
| | | | | | | | |
| **Revenues over Expenses** | - | (61,253) | 529,523 | 753,856 | 1,052,861 | (753,856) | 0% |

## Utility Fund Revenues

The financial data for the Utility Fund as of January FY25 reflects strong revenue generation and controlled expenditures, resulting in a significant surplus. Below is a detailed breakdown of the financial performance.

**Revenue Analysis**

**Water:**

- YTD Revenue for FY25: $1,630,275 (37% of the annual budget)
- The Water revenue is performing above the 33% benchmark, generating 37% of the budgeted revenue in just one month. This indicates a strong collection rate and a solid start to the year.

**Sewer:**

- YTD Revenue for FY25: $1,054,446 (31% of the annual budget)
- Sewer revenue is slightly below the benchmark, at 31%, but still close to expectations. The slight lag could be due to variations in billing cycles or seasonal factors.

**Other Revenue:**

- YTD Revenue for FY25: $426,525 (26% of the annual budget)
- Other revenue is underperforming compared to the 33% benchmark, at 26%. This category holds revenues that do not fit in with other categories.

**Transfers In:**

- YTD Revenue for FY25: $88,994 (18% of the annual budget)
- Transfers In are running lower than expected, at just 18%. Transfers will occur later in the fiscal year.

**Total Utility Fund Revenues:**

- Budget for FY25: $9,907,847
- YTD Revenue for FY25: $3,200,239 (32% of the annual budget)
- Total revenues are close to the benchmark of 33%, at 32%. This is a positive sign that revenue generation is on track for the fiscal year, though some categories, such as Other Revenue and Transfers In, will need monitoring to ensure they meet full-year projections.

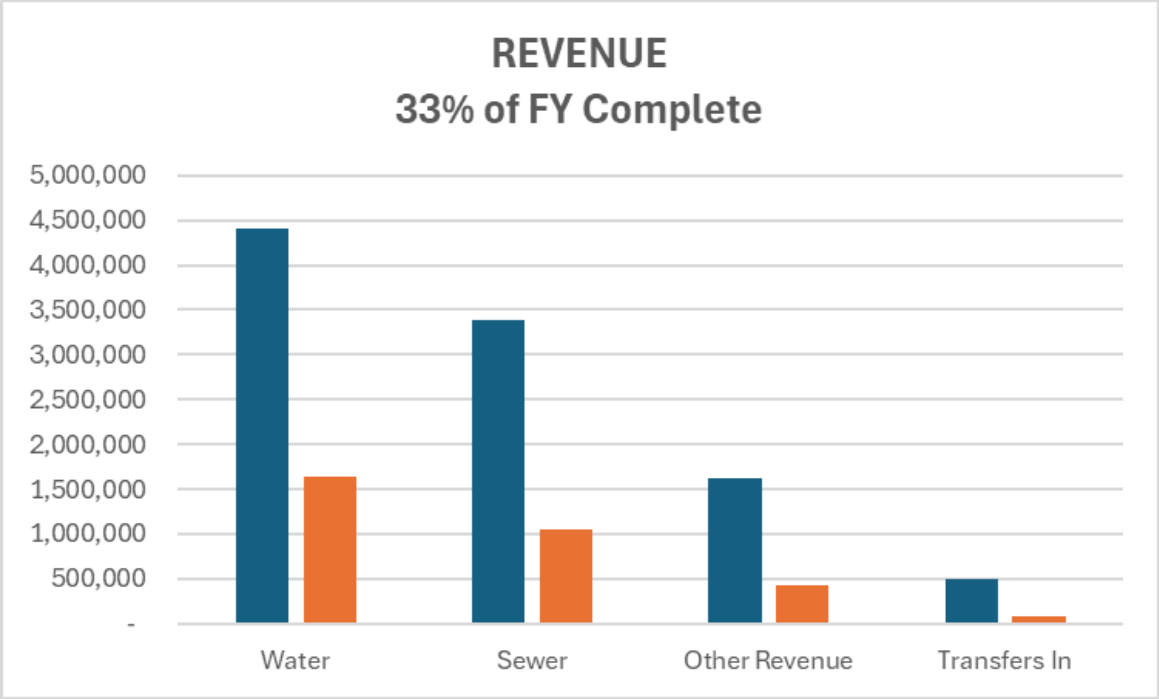


**Expenditures:**

**UB Accounting:**

- YTD Expenditure for FY25: $129,833 (19% of the annual budget)
- UB Accounting expenditure is below the 33% benchmark, at just 19%. This is a favorable sign, indicating lower-than-expected spending in this area early in the year.

**Utility Line Maintenance:**

- YTD Expenditure for FY25: $606,361 (32% of the annual budget)
- Utility Line Maintenance is closely tracking the benchmark, with expenditures at 32% of the budget. This suggests that maintenance activities are proceeding at a normal pace.

**Water & Sewer Operations:**

- YTD Expenditure for FY25: $1,406,410 (30% of the annual budget)
- Water and Sewer operations are below the benchmark at 30%, which is positive, indicating that operational costs are in line with expectations and well-managed.

**Debt Service:**

- YTD Expenditure for FY25: $29,447 (88% of the annual budget)
- Debt service expenditures are significantly ahead of schedule, consuming 88% of the annual budget. The 2019 Lease Purchase payment was due and paid.

**Storm Water:**

- YTD Expenditure for FY25: $9,907 (3% of the annual budget)
- Storm Water expenditures are very low, at only 3% of the budget. This could indicate that stormwater-related projects or maintenance are scheduled later in the fiscal year.

**Fund Expenditures:**

- YTD Expenditure for FY25: $264,425 (12% of the annual budget)
- Fund expenditure is considerably under budget, at just 12%. The funds have not been fully allocated or expended as of January, which may change later in the year.

**Total Utility Fund Expenditures:**

- Budget for FY25: $9,907,847
- YTD Expenditure for FY25: $2,446,383 (25% of the annual budget)
- Total expenditure is below the 33% benchmark, at 25%. This indicates that expenses are being carefully managed, and there is significant room to absorb any future cost increases.

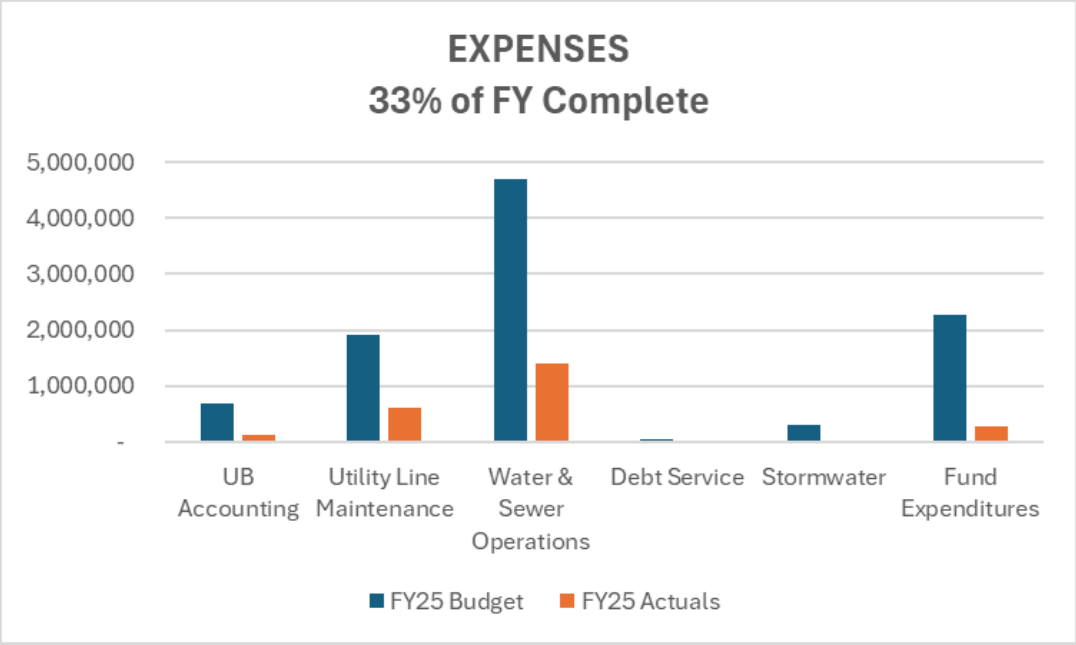


## Revenues Over Expenses

- **YTD Revenues Over Expenses:** $753,856
- The Utility Fund is currently in a favorable position, with revenues exceeding expenses by $753,856. This reflects solid revenue generation and effective expense control during the first month of the fiscal year.

# Sanitation Fund

## Sanitation Revenue Snapshot

| | FY25 Budget | FY25 Collections |
|---|---|---|
| Dumpster Locking | 4,600 | 359 |
| Sales and Use Tax | 45,000 | 12,716 |
| Sanitation | 3,096,186 | 788,949 |
| Franchise Fees | 4,500 | 29,727 |
| Interest Revenue | 50 | 7 |

## Sanitation Department Expenditure Snapshot

| | FY25 Budget | FY25 Actuals |
|---|---|---|
| Sanitation - Residential | 2,125,041 | 753,883 |
| Sanitation - Commerical | 161,156 | 13,768 |
| Container Collection | 851,360 | 80,198 |

| | Budget | January FY25 | January FY24 | YTD FY25 | YTD FY24 | Remaining | Benchmark 33% |
|---|---|---|---|---|---|---|---|
| **Sanitation Fund** | | | | | | | |
| **Revenues:** | | | | | | | |
| Dumpster Locking | 4,600 | 41 | 375 | 359 | 1,551 | 4,241 | 8% |
| Sales and Use Tax | 45,000 | 3,469 | 2,987 | 12,716 | 12,692 | 32,284 | 28% |
| Sanitation | 3,096,186 | 183,141 | 252,420 | 788,949 | 759,819 | 2,307,237 | 25% |
| Franchise Fee | 4,500 | 9,935 | 157 | 29,727 | 520 | (25,227) | 661% |
| Interest Revenue | 50 | 3 | 2 | 7 | 12 | 43 | 14% |
| Total Sanitation Revenue | 3,150,336 | 196,588 | 255,941 | 831,759 | 774,594 | 2,318,577 | 26% |
| | | | | | | | |
| **Expenditures:** | | | | | | | |
| Sanitation - Residential | 2,125,041 | 190,395 | 178,848 | 753,883 | 720,007 | 1,371,158 | 35% |
| Sanitation - Commercial | 161,156 | (151) | 13,555 | 13,768 | 53,504 | 147,388 | 9% |
| Container Collection | 851,360 | | 74,744 | 80,198 | 367,733 | 771,162 | 9% |
| Total Sanitation Expenses | 3,137,557 | 190,244 | 267,147 | 847,849 | 1,141,244 | 2,289,708 | 27% |
| | | | | | | | |
| **Revenues over Expenses** | 12,779 | 6,344 | (11,206) | (16,090) | (366,650) | 28,869 | -126% |

## Revenues

**Dumpster Locking:**

- YTD Revenue for FY25: $359 (8% of the annual budget)
- Revenue from Dumpster Locking should not be in the City's books. Waste Management is now in charge of dumpster locking. Will research this amount.

**Sales and Use Tax:**

- YTD Revenue for FY25: $12,716 (28% of the annual budget)
- Sales and Use Tax revenue is tracking slightly below the benchmark at 28%. This is still within an acceptable range, but it's important to continue monitoring to ensure it aligns with projected trends.

**Sanitation:**

- YTD Revenue for FY25: $788,949 (25% of the annual budget)
- The core revenue from Sanitation services is performing slightly below the 33% benchmark, at 25%. This indicates that either the billing cycle has not fully caught up, or collections are lower than expected early in the year.

**Franchise Fee:**

- YTD Revenue for FY25: $29,727
- Franchise Fee revenue has exceeded expectations numerically. The City started imposing a franchise fee on commercial businesses.

**Interest Revenue:**

- YTD Revenue for FY25: $7 (14% of the annual budget)
- Interest revenue is below expectations but is relatively minor in this fund. Interest rates have lower significantly from last fiscal year.

**Total Sanitation Revenue:**

- Budget for FY25: $3,150,336
- YTD Revenue for FY25: $831,759 (26% of the annual budget)
- Total revenues are below the 33% benchmark, at 26%. This indicates that the Sanitation Fund's revenue collection is lagging slightly behind the expected pace, but the Franchise Fee has boosted revenue.

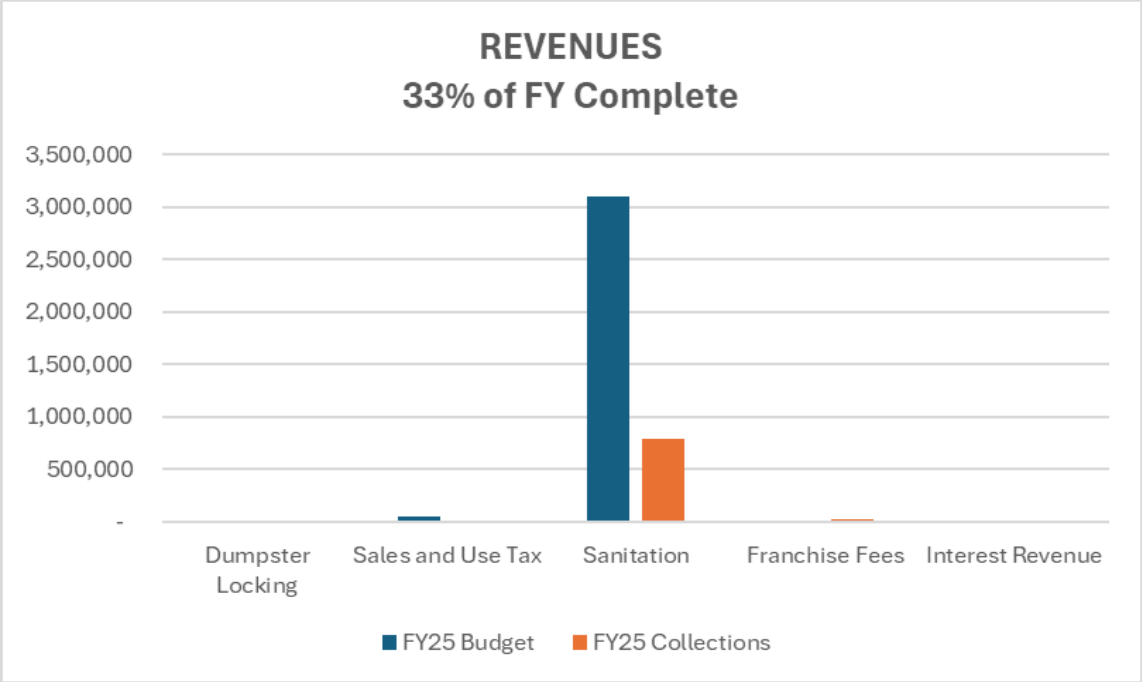


## Expenditures

**Sanitation - Residential:**

- YTD Expenditure for FY25: $753,883 (35% of the annual budget)
- Residential sanitation expenditures are above the 33% benchmark, at 35%. This suggests that spending is running ahead of schedule, possibly due to earlier seasonal costs or increased demand for services.

**Sanitation - Commercial:**

- YTD Expenditure for FY25: $13,768 (9% of the annual budget)
- Commercial sanitation expenditures are well below the expected level, at just 9% of the annual budget. The commercial accounts no longer have dumpster locking fees. Waste Management has taken over this. There were a handful of commercial accounts that were still being charged, but it is being researched why these charges are still being reflected in our ledgers. The software helpdesk has been contacted.

**Container Collection:**

- YTD Expenditure for FY25: $367,733 (43% of the annual budget)
- Container Collection expenditure is notably above the benchmark at 43%. This may be due to larger than expected spending on maintenance or collection services in the early months of the year.

**Total Sanitation Expenses:**

- Budget for FY25: $3,137,557
- YTD Expenditure for FY25: $847,849 (27% of the annual budget)
- Total expenditure is slightly below the 33% benchmark, at 27%. While most categories are tracking as expected, Container Collection expenses are elevated, indicating higher-than-expected early-year costs.

**Revenues over Expenses**

- YTD Revenues Over Expenses are trending in the negative.
- The Sanitation Fund is operating with a slight deficit of $16,090, indicating that expenditures are slightly exceeding revenues.

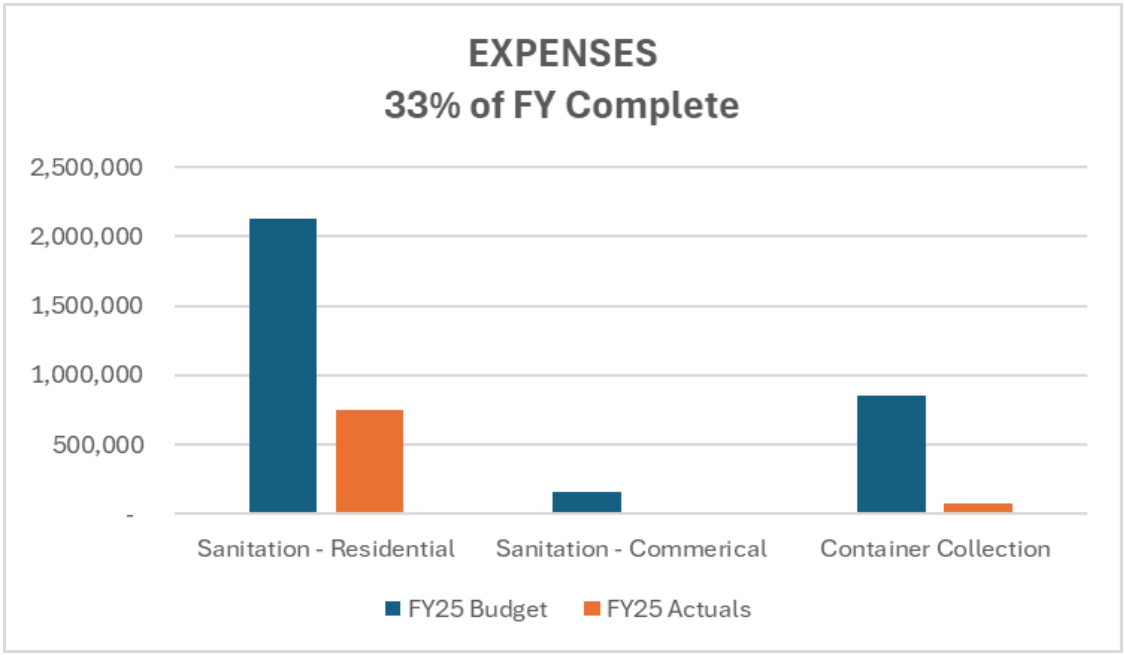


**Total Sanitation Expenses:**

- Budget for FY25: $3,137,557
- YTD Expenditure for FY25: $847,849 (27% of the annual budget)
- YTD Expenditure for FY24: $1,141,244
- Analysis: Total expenditure is under the 33% benchmark, at 27%. This suggests that while costs in Residential Sanitation and Container Collection are above the expected pace, overall, the fund is managing expenses within a reasonable range. Commercial Sanitation expenses are well below expectations, which may offset the overspending in other areas.

# CITY COUNCIL AGENDA FORM

Meeting Date: March 10, 2025
Agenda Item: 11.II.
Prepared by:
Reviewed by:
Department: City Clerk

**AGENDA ITEM DESCRIPTION:**
For the purpose of hearing a complaint or charge against an officer or employee: Councilmember District C

**STAFF BRIEFING:**

**HISTORY:**

**FISCAL IMPACT:**

**Monday, November 11, 2024 at 14:04:10 Central Standard Time**

---

**Subject:** Ethnic council member Joseph Lowry : for this kind of behavior from a sitting member is unacceptable and needs to be reported to the FBI ; and the police police alumni, who voted to put this racist person in the association, should be ashamed of themse...

**Date:** Monday, November 11, 2024 at 7:54:42 AM Central Standard Time

**From:** jackie perrin

**To:** j.compian@cityoflamarque.or, j.pritchett@cityoflamarque.or, cityclerk@cityoflamarque.org, jross@cittyoflamarque.org, c.garcia@cityoflamarque.org, k.yancy@cityoflamarque.org, k.bell@cityoflamarque.org, Gus Knebel

**Attachments:** IMG_1111.PNG

Posts About Photos Events Mentions

**Featured** Manage

**Recall Joseph Lowry**
Posted by Carolyn Small
15h ·

An immature response from an immature man.

**Lowry News Network** is in **La Marque, TX.**
16m ·

am a resident of District C in La Marque.

humbly request my mayor strongly consider stepping down from his position as a city mayor.

Because of multiple issues there is an increasing focus on he rather than we in the city.

His departure would also be to the betterment for the future of our city.

t is my concern that political strife will continue so long as he remains on the city council.

After prayerful consideration should he elect to do so, his appointed replacement should be one with his concurrence.

This individual must be willing to represent his values for the city with the highest degree of diplomacy and integrity.



Lowry News Network Message Us

His departure would also be to the betterment for the future of our city.

It is my concern that political strife will continue so long as he remains on the city council.

After prayerful consideration should he elect to do so, his appointed replacement should be one with his concurrence.

This individual must be willing to represent his values for the city with the highest degree of diplomacy and integrity.




See insights Boost a post

Home Video Notifications Menu

**Subject:** Ethics on council member Joseph Lowry
**Date:** Tuesday, November 5, 2024 at 9:54:23 AM Central Standard Time
**From:** jackie perrin
**To:** j.compian@cityoflamarque.or, k.yancy@cityoflamarque.org, cityclerk@cityoflamarque.org, jross@cittyoflamarque.org, c.garcia@cityoflamarque.org, j.pritchett@cityoflamarque.or, k.bell@cityoflamarque.org, Gus Knebel

After watching the last meeting on YouTube Joseph became uncontrollable and out of oder all the while the Mayor was trying to remove him to secure the members and the visiting citizens, they're is a Penal code 42 in Texas for this procedure" why wasn't this procedure done?
Also I have a concern about the police alumni" that kicked off a member after 5 years of Association " being kicked off for supporting Black live matter protest that is clearly her civil rights to do now a ethic complaint against her and her District A supporters that were disappointed in this decision.
Now Robert Michetich speaking out on this and giving a different reason for being kicked off , but he's not a member " or president how is he allowed to speak on behalf of the association on their policy, giving the reason council member Kimberly Yancy hasn't paid dues in five years which raises questions why wait five years and after a new president Katherine Herrin Kieth was elected if this is their policy ?
I looked at their ethics and their policies and nowhere is this reason on any policy,
Katherine Herrin has been outspoken about Kimberly Yancy not supporting our police department because of this she calls disrespect,it I this seems to be more of a opinion than policy and if she is concerned about this issue why was Joseph lowry aloud to become a member with his years of threats to the city , the police department and police Cheif , calling them Thugs and corrupt? Also he is a known felon in three different charges, also family violence charges and convictions on all the charges with a felony gun charge , and his wife with a misdemeanor A charge; these charges are on the police report that anyone can pull up including law enforcement, and goes against The police alumni policy , so I feel this is a bias Alligation towards councilmember Kimberley Yancy .
Also as a concerned Citizen. A felon sitting on city Council that clearly is against our charter. I want to ask city Council to take a vote for a subpoena to Washington state to prove he is a felon. that has been proven, and each of you have the records. Thank you
Jacqueline perrin
1304 Rhodora st
409 3447583